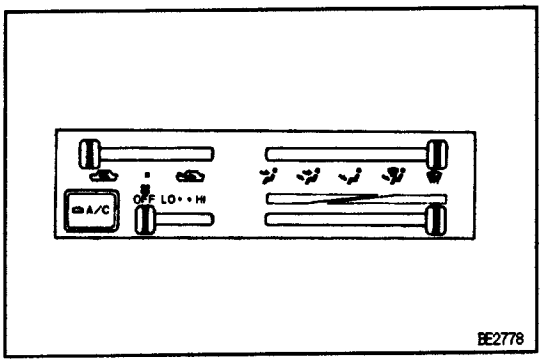

AIR CONDITIONING CONTROL ASSEMBLY

ON–VEHICLE INSPECTION

INSPECT A/C CONTROL LEVERS OPERATION

Move the control levers left and right and check for stiffness and binding through the full range of the levers.

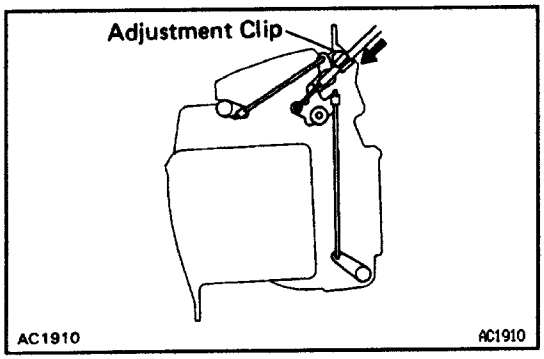

A/C CONTROL CABLES ADJUSTMENT

1. ADJUST AIR INLET DAMPER CONTROL CABLE

Set the air inlet damper on ”FRESH” position, install the control cable and lock the clamp.

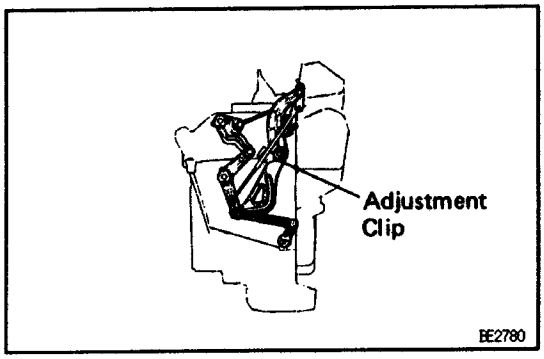

2. ADJUST MODE DAMPER CONTROL CABLE

Set the mode damper on ”DEF” position, instal! the control cable and lock the clamp.

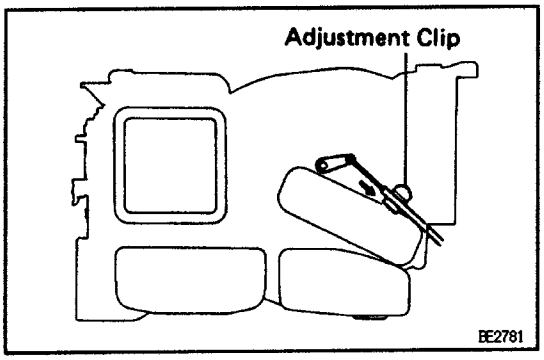

3. ADJUST AIR MIX DAMPER CONTROL CABLE

Set the air mix damper on ”COOL” position, install the control cable and lock the clamp.

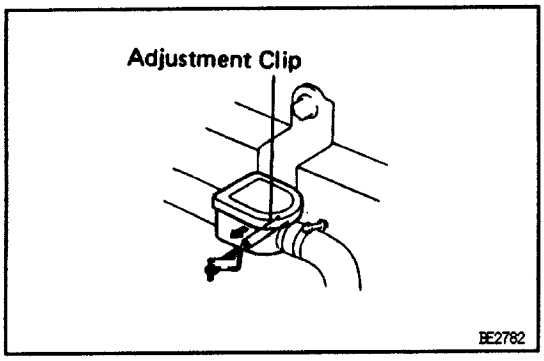

4. ADJUST WATER VALVE CONTROL CABLE

Set the water valve on ”COOL” position, install the control cable lock the clamp.

HINT: Place the water valve lever on ”COOL” and while pushing the outer cable in the ”COOL” direction, clamp the outer cable to the water valve bracket.

A/C CONTROL ASSEMBLY REMOVAL

(See page BO–51)

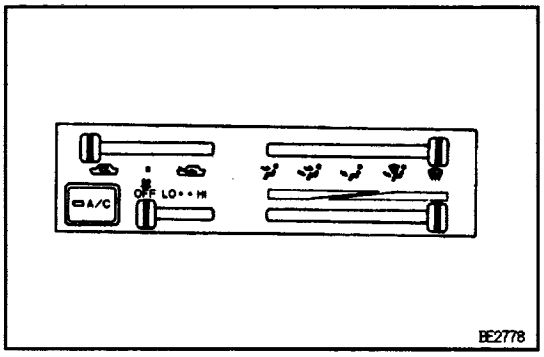

BLOWER SPEED CONTROL SWITCH REMOVAL

REMOVE BLOWER SPEED CONTROL SWITCH

(a) Remove the illumination light from the A/C control assembly.

(b) Using a screwdriver, pry loose the clip and push out the blower speed control switch to rear of the A/C control assembly.

LOWER CONTROL SWITCH INSPECTION

1. INSPECT FRONT BLOWER CONTROL SWITCH

Continuity

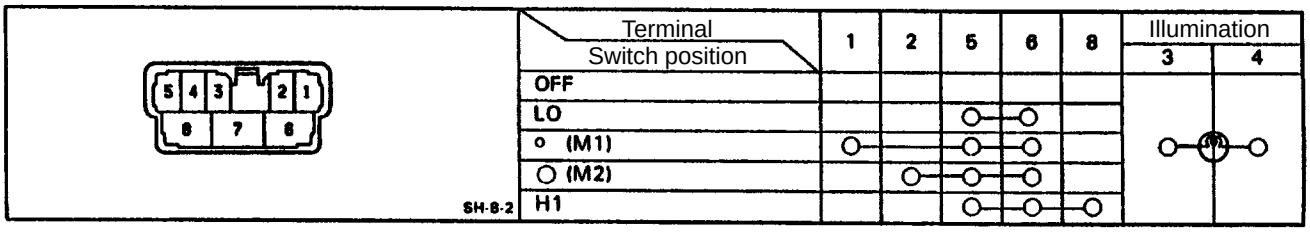

If continuity is not as specified, replace the blower speed control switch.

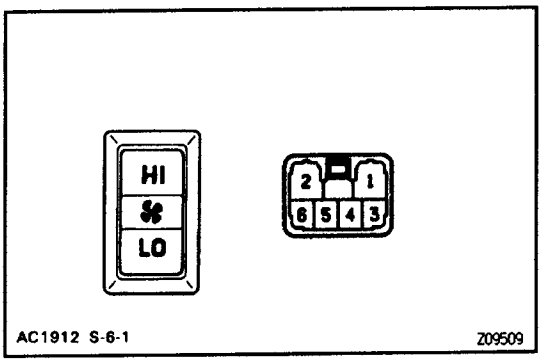

2. INSPECT REAR BLOWER CONTROL SWITCH CON–TINUITY

Condition	Tester connection to terminal number	Specified value
Blower switch OFF	–	No continuity
Blower switch HI	1 – 2 – 4	Continuity
Blower switch LO	1 – 4	Continuity

If continuity is not as specified, replace the A/C switch.

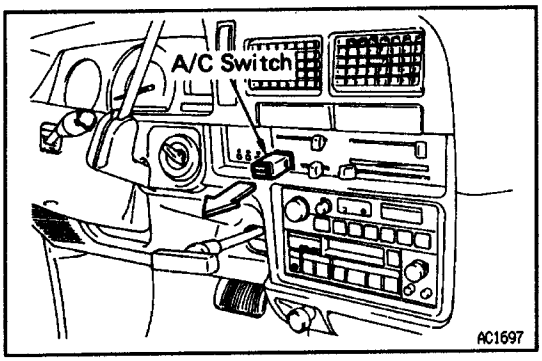

A/C SWITCH REMOVAL

1. DISCONNECT NEGATIVE (–) TERMINAL CABLE FROM BATTERY
2. REMOVAL GLOVE BOX
3. REMOVAL A/C SWITCH

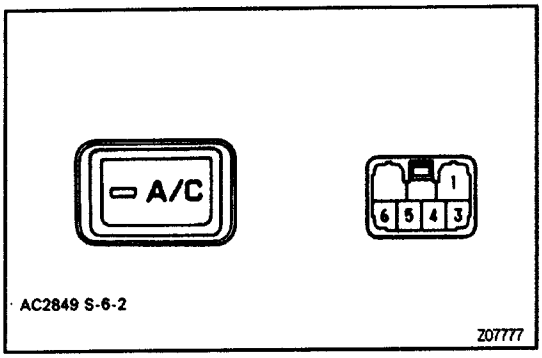

A/C SWITCH INSPECTION

INSPECT A/C SWITCH CONTINUITY

Condition	Tester connection to terminal number	Specified value
A/C switch OFF	–	No continuity
A/C switch ON	4 – 5 4 – 6	Continuity
Illumination circuit	1 – 3	Continuity

If continuity is not as specified, replace the A / C switch.

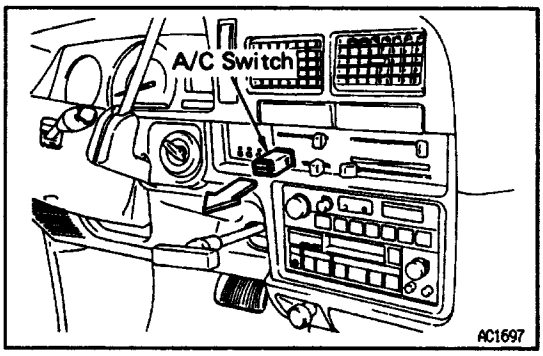

A/C SWITCH INSTALLATION

1. INSTALL A/C SWITCH
2. INSTALL GLOVE BOX
3. CONNECT NEGATIVE (–) TERMINAL CABLE TO BATTERY

A/C CONTROL ASSEMBLY INSTALLATION

(See page BO–51)

AIR CONDITIONING CUT–OFF RELAY
(4WD with 3VZ–E E/G and A/T)

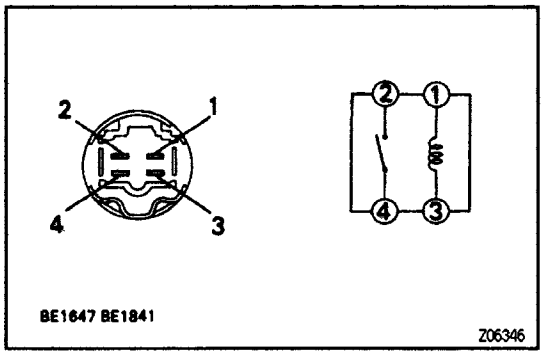

RELAY INSPECTION

INSPECT A/C CUT–OFF RELAY CONTINUITY

Condition	Tester connection to terminal number	Specified value
Constant	**1 – 3**	**Continuity**
Apply B+ between terminals 1 and 3.	**2 – 4**	**Continuity**

If continuity is not as specified, replace the relay.

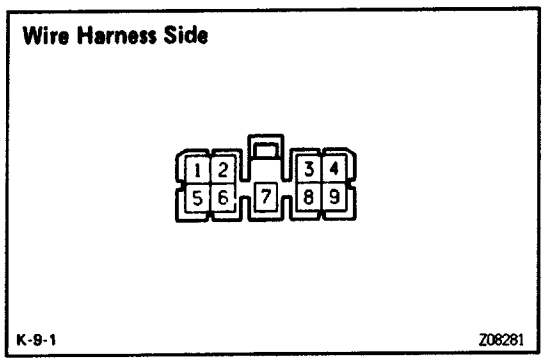

AIR CONDITIONING AMPLIFIER

AMPLIFIER REMOVAL

1. REMOVE GLOVE BOX

2. REMOVE A/C AMPLIFIER

(a) Disconnect the connector from the amplifier.

(b) Remove the amplifier from the cooling unit.

AMPLIFIER INSTALLATION

1. INSTALL A/C AMPLIFIER

(a) Install the amplifier to the cooling unit.

(b) Connect the connector.

2. INSTALL GLOVE BOX

AMPLIFIER INSPECTION

INSPECT A/C AMPLIFIER CONNECTOR ON WIRE HARNESS SIDE

Test conditions:

- Ignition switch ON
- Temperature control lever to MAX COOL
- Blower switch ON

Do you paid for the content in this manual? Don't be screwed!
Download this and more for free at ...

Tester connection to terminal number	Condition	Specified value (Continuity)
7 – 8	Constant	**Continuity**
8 – Ground	Constant	**Continuity**
Tester connection to terminal number	Condition	Specified value (Voltage)
3 – 8	Turn A/C switch ON	**Battery positive voltage**
3 – 8	Turn A/C switch OFF	**Battery positive voltage**
4 – 8	Turn A/C switch ON	**Battery positive voltage**
4 – 8	Turn A/C switch OFF	**No voltage**
6 – 8	Start the engine.	**Approx. 10 to 14 V**
6 – 8	Stop the engine.	**No voltage**
8 – 9	Turn A/C switch ON	**Battery positive voltage**
8 – 9	Turn A/C switch OFF	**Battery positive voltage**
Tester connection to terminal number	Condition	Specified value (Resistance)
2 – 5	MAX. COOL	**Approx. 0 Ω**
2 – 5	MIN. COOL	**Approx. 3 kΩ**
5 – 8	Constant	**Approx. 1.5 kΩ at 25 °C (77 °F)**

If circuit is as specified, try replacing the amplifier with a new one. If the circuit is not as specified, inspect the circuits connected to other parts.

BLOWER RESISTOR

ON–VEHICLE INSPECTION

1. DISCONNECT NEGATIVE (–) TERMINAL CABLE FROM BATTERY

2. REMOVE FRONT BLOWER RESISTOR

(a) Remove the glove box.
(b) Disconnect the connector from the blower resistor.
(c) Remove the 2 screws and the blower resistor.

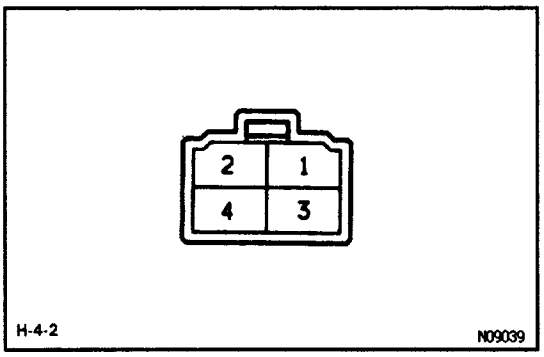

3. INSPECT FRONT BLOWER RESISTOR OPERATION

Condition	Tester connection to terminal number	Specified value
Constant	**1 – 2 – 3 – 4**	**Continuity**

If continuity is not as specified, replace the blower resistor.

4. REMOVE REAR BLOWER RESISTOR

(a) Remove the console box.
(b) Disconnect the connector from the blower resistor.
(c) Remove the 2 screws and the blower resistor.

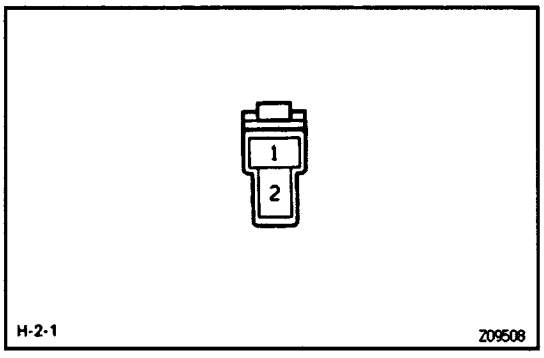

5. INSPECT REAR BLOWER RESISTOR OPERATION

Measure the resistance between terminals.

Standard resistance:

Approx. 3.2 Ω at 25°C (77° F)

If resistance is not as specified, replace the blower resistor.

COMPRESSOR

ON – VEHICLE INSPECTION

1. INSTALL MANIFOLD GAUGE SET

2. RUN ENGINE AT APPROX. 1,500 RPM

3. CHECK COMPRESSOR FOR THESE:

- High pressure gauge reading is not low and low pressure gauge reading is not higher than normal.
- Metallic sound
- Leakage from shaft seal
- If defects are found, repair the compressor.

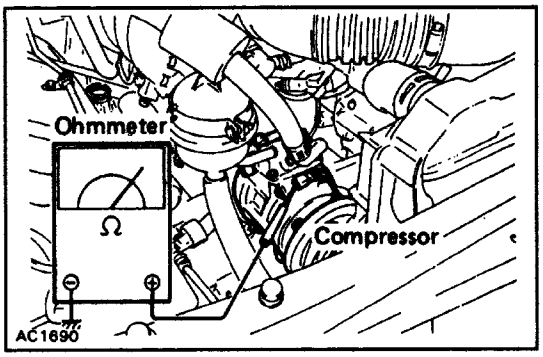

4. CHECK MAGNETIC CLUTCH

(a) Inspect the pressure plate and the rotor for sings of oil.

(b) Check the clutch bearing for noise and grease leak–age.

(c) Using an ohmmeter, measure the resistance of the stator coil between the clutch lead wire and ground.

Standard resistance:

3.6 ± 0.2 Ω at 20 ° C (88°F)

If resistance value is not as specified, replace the coil.

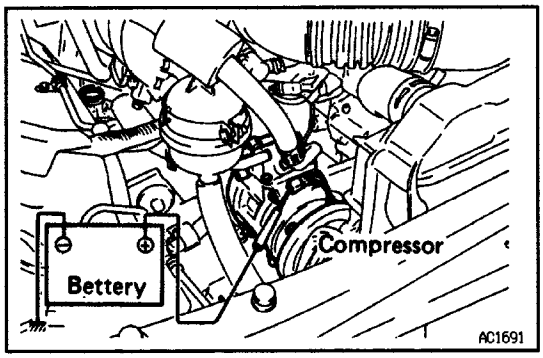

(d) Connect the positive (+) lead from the battery to terminal, check that the magnetic clutch is energized.

If magnetic clutch is not energized, replace the oil.

NOTICE: Do not short the positive (+) lead wire on the vehicle by applying battery positive voltage.

COMPRESSOR REMOVAL

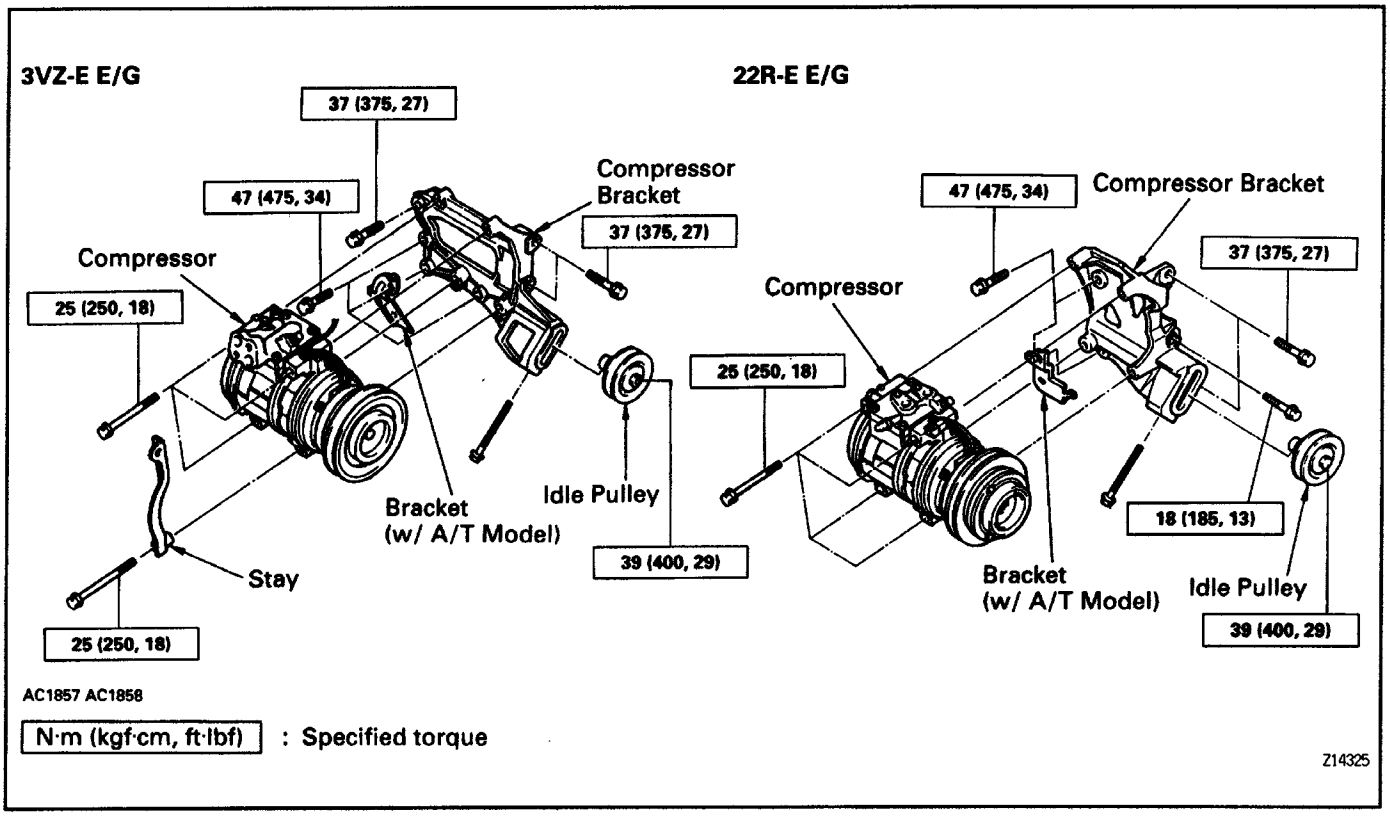

1. **RUN ENGINE AT IDLE SPEED FOR 10 MINUTES WITH AIR CONDITIONING ON**
2. **STOP ENGINE**
3. **DISCONNECT NEGATIVE (–) TERMINAL CABLE FROM BATTERY**
4. **3VZ–E Engine Models:**
   REMOVE POWER STEERING PUMP
5. **DISCONNECT CLUTCH LEAD WIRE FROM WIRING HARNESS**
6. **DISCHARGE REFRIGERANT FROM REFRIGERATION SYSTEM**
7. **DISCONNECT 2 HOSE FROM COMPRESSOR SERVICE VALVES**
   HINT: Cap the open fitting immediately to keep moisture out of the system.
8. **REMOVE COMPRESSOR**
   (a) Remove the fan shroud.
   (b) Loosen the drive belt.
   (c) Remove the compressor mounting bolts and the compressor.

MAGNETIC CLUTCH DISASSEMBLY

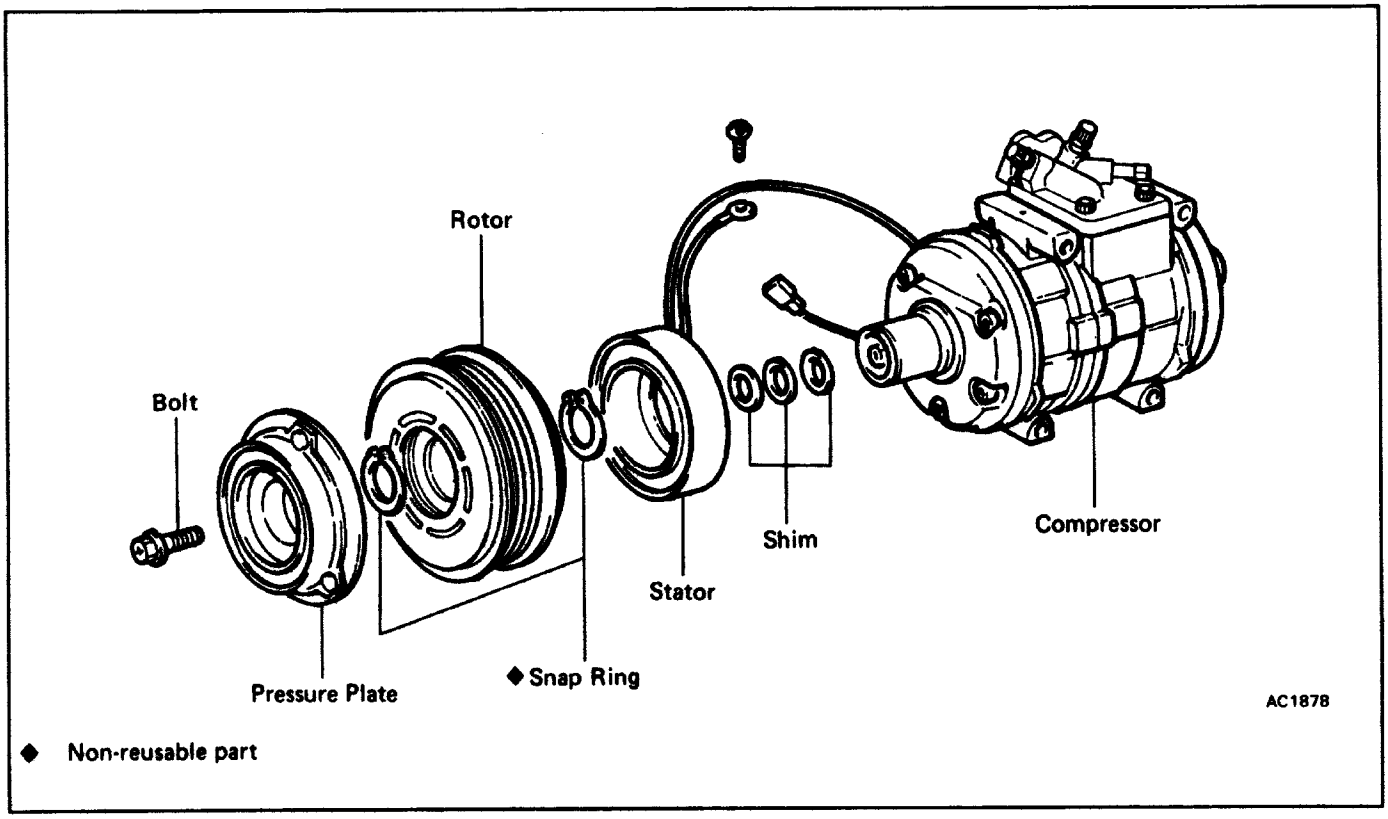

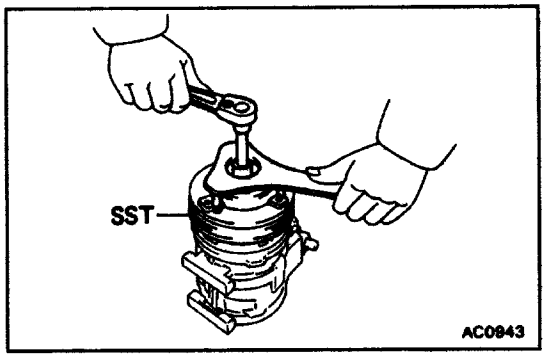

1. REMOVE PRESSURE PLATE

(a) Using SST and socket wrench, remove the shaft bolt.
SST 07112–76060

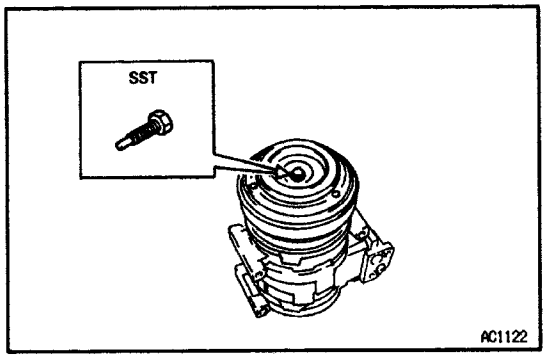

(b) install a SST on the pressure plate.
SST 07112–66040

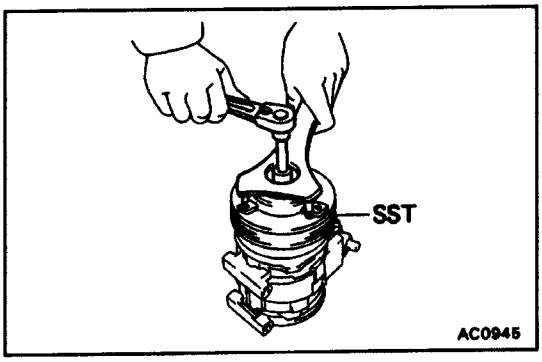

(c) Using SST and socket wrench, remove the pressure plate.
SST 07112–76060

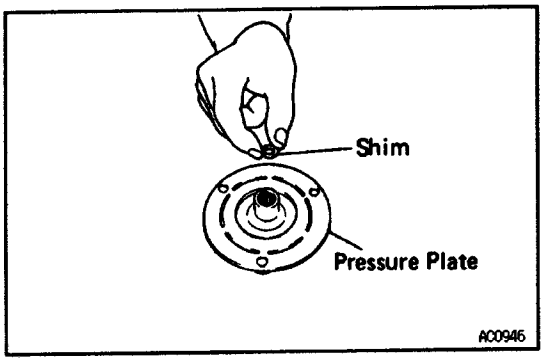

(d) Remove the shims from the pressure plate.

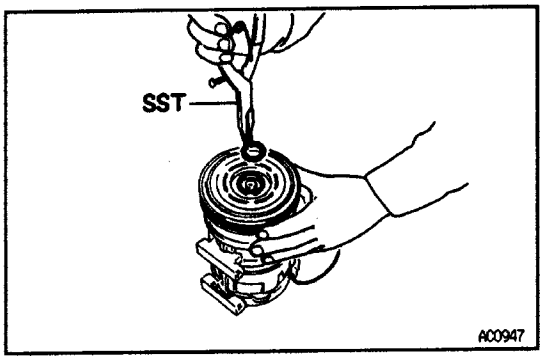

2. REMOVE ROTOR

(a) Using SST, remove the snap ring.
SST 07114– 84020

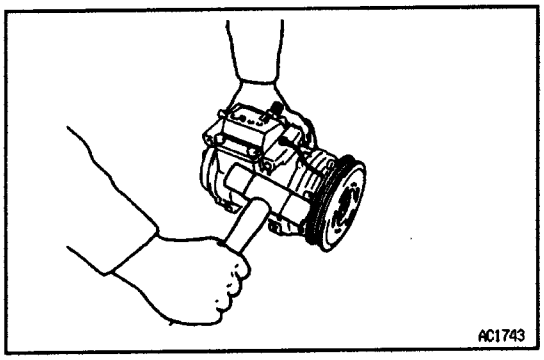

(b) Using a plastic hammer, tap the rotor oft the shaft.
NOTICE: Be careful not to damage the pulley when tapping on the rotor.

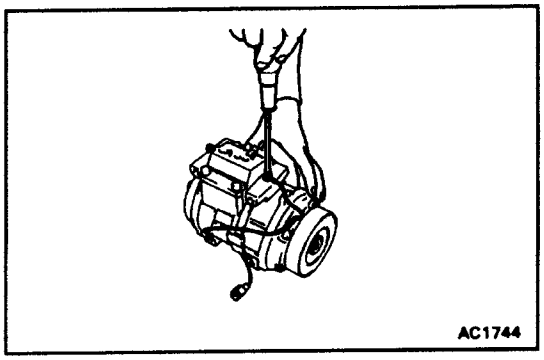

3. REMOVE STARTER

(a) Disconnect the stator lead wire from the compressor housing.

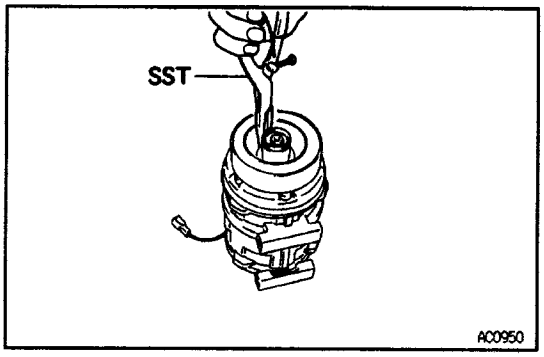

(b) Using SST, remove the snap ring.
SST 07114 – 84020

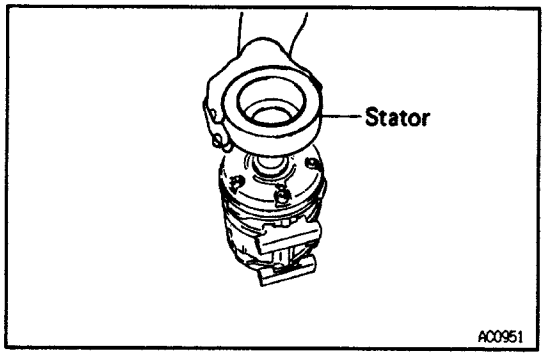

(c) Remove the stator.

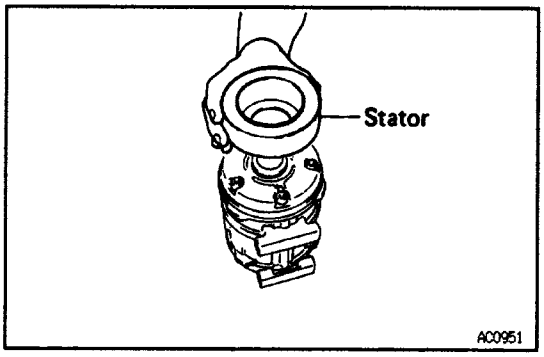

MAGNETIC CLUTCH ASSEMBLY

1. INSTALL STATOR

(a) Install the stator on the compressor.

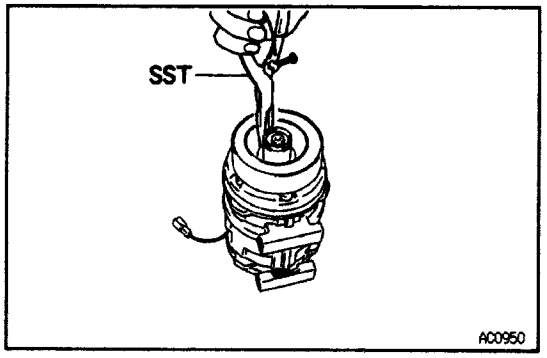

(b) Using SST, install the new snap ring.
SST 07114–84020

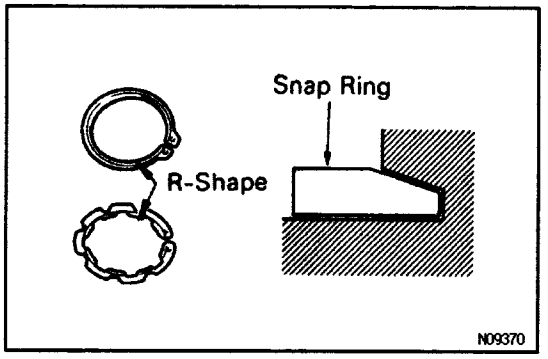

NOTICE: The snap ring should be installed :o that its beveled side faces up.

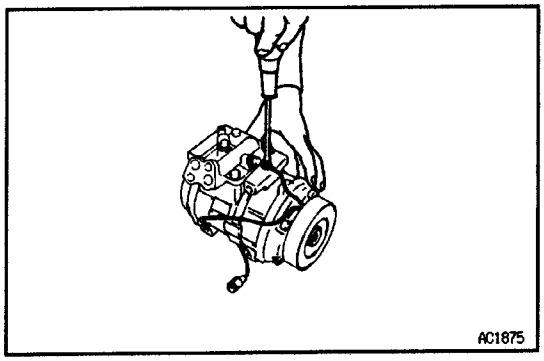

(c) Connect the stator lead wire to the compressor housing.

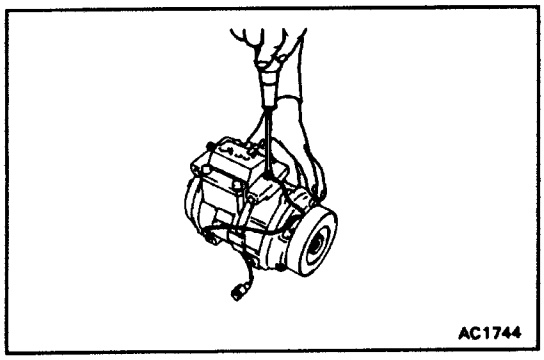

2. INSTALL ROTOR

(a) Install the rotor on the compressor shaft.

(b) Using SST, install the new snap ring.

SST 07114–84020

NOTICE: Do not spread the point of SST widely.

Max width: 23.1 mm (0.909 in.)

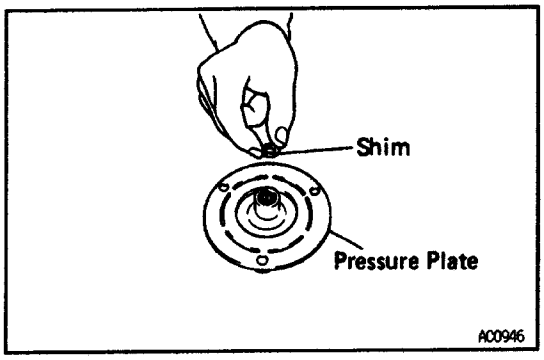

3. INSTALL PRESSURE PLATE

(a) Adjust the clearance between the pressure plate and rotor by putting shims on the compressor shaft.

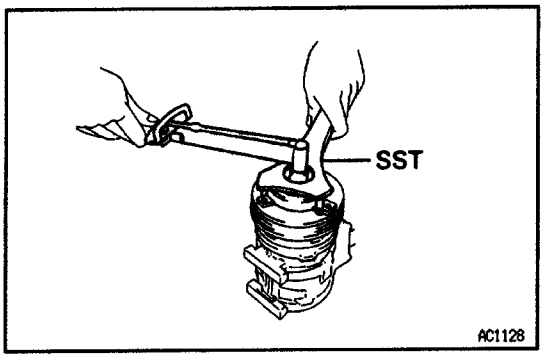

(b) Using SST and torque wrench, install the shaft bolt.

SST 07112–76060

Torque: 14 N–m (140 kgf–cm, 10 ft–lbf)

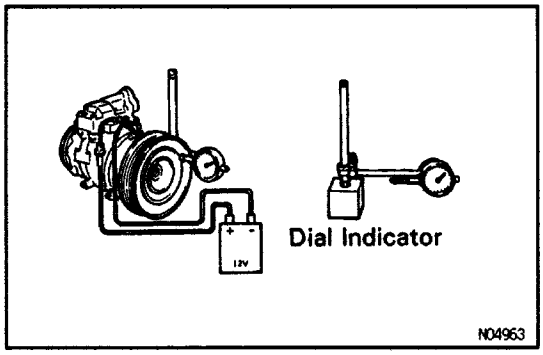

4. CHECK CLEARANCE OF MAGNETIC CLUTCH

(a) Set the dial indicator to the pressure plate of the magnetic clutch.

(b) Connect the magnetic clutch lead wire to the positive (+) terminal of the battery.

(c) Check the clearance between the pressure plate and rotor, when connect the negative (–) terminal of the battery.

Standard clearance:

0.5 ± 0.15 mm (0.020 ± 0.0059 in.)

If the clearance is not within standard clearance, adjust the clearance using shims to obtain the standard clearance.

Shim Thickness:

0.1 mm (0.004 in.)
0.3 mm (0.012 in.)
0.5 mm (0.020 in.)

COMPRESSOR INSTALLATION

1. INSTALL COMPRESSOR WITH 3 MOUNTING BOLTS

Torque: 27 N–m (280 kgf–cm, 20 ft–lbf)

2. INSTALL DRIVE BELT

3. INSPECT DRIVE BELT TENSION

(See page AC–23)

4. CONNECT 2 HOSES TO COMPRESSOR SERVICE VALVES

Torque: 25 N–m (250 kgf–cm, 18 ft–lbf)

5. CONNECT CLUTCH LEAD WIRE TO WIRING HARNESS

6. CONNECT NEGATIVE (–) TERMINAL CABLE TO BATTERY

7. EVACUATE AIR IN REFRIGERATION SYSTEM AND CHARGE WITH REFRIGERANT

Specified amount:

700 ± 50 g (24.69 ± 1.76 oz.)

CONDENSER FAN

ON–VEHICLE INSPECTION

1. DISCONNECT NEGATIVE (–) TERMINAL CABLE PROM BATTERY

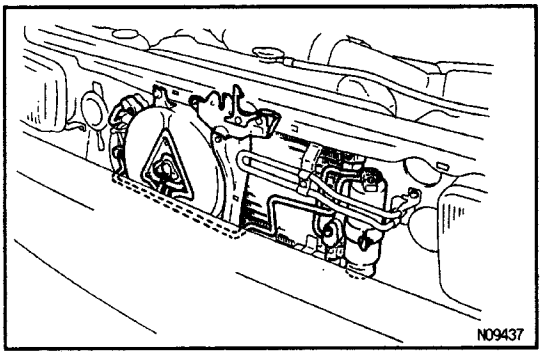

2. INSPECT CONDENSER FAN

(a) Disconnect the fan connector.

(b) Connect battery and ammeter to the cooling fan connector.

(c) Check that the condenser fan rotate smoothly, and check the reading on the ammeter.

Standard amperage:

8.0 ± 0.7 A

(d) Connect the fan connector.

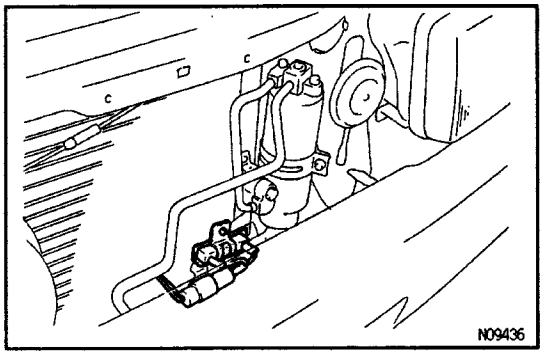

3. INSPECT FAN SPEED CONTROL RESISTOR

(a) Remove the front grille.

(b) Using an ohmmeter, check the resistance of the resistor.

Standard resistance:

0.6 ± 0.06Ω at 20˚ (68˚F)

If resistance is not as specified, replace the resistor.

CONDENSER

ON–VEHICLE INSPECTION

1. CHECK CONDENSER FINS FOR BLOCKAGE OR DAMAGE

If the fins are clogged, wash them with water and dry with compressed air.

NOTICE: Be careful not to damage the fins.

If the fins are bent, straighten them with a screwdriver or pliers.

2. CHECK CONDENSER AND FITTINGS FOR LEAKAGE

Repair as necessary.

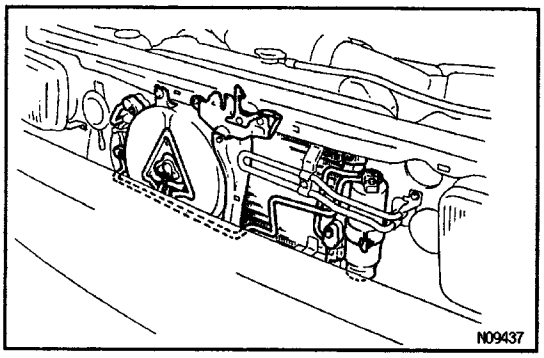

CONDENSER REMOVAL

1. DISCHARGE REFRIGERANT FROM REFRIGERATION SYSTEM

2. REMOVE CLEARANCE LIGHT AND FRONT GRILLE

3. DISCONNECT DISCHARGE HOSE FROM CONDENSER INLET FITTING

4. DISCONNECT 2 LIQUID TUBE

NOTICE: Cap open the fittings Immediately to keep moisture out of the system.

5. REMOVE HOOD LOCK BRACE

6. REMOVE CONDENSER FAN MOTOR

7. REMOVE CONDENSER

Remove the 4 bolts and the condenser.

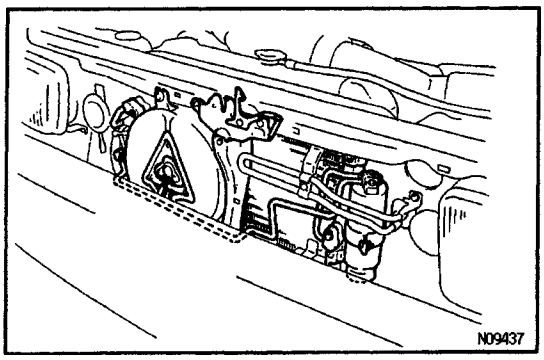

CONDENSER INSTALLATION

1. INSTALL CONDENSER

Install the 4 bolts making sure the rubber cushions fit on the mounting flanges correctly.

2. INSTALL CONDENSER FAN MOTOR

3. INSTALL HOOD LOCK BRACE

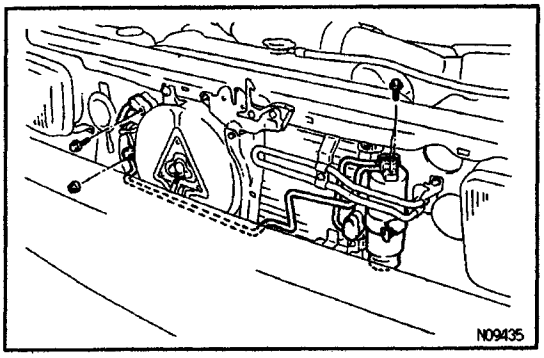

4. CONNECT LIQUID TUBE TO RECEIVER AND DISCHARGE HOSE TO CONDENSER

Torque:

Liquid tube x receiver:

6.0 N–m (60 kgf–cm, 52 in.–lbf)

Liquid tube x condenser:

10 N–m (100 kgf–cm, 7 ft in.–lbf)

Discharge hose:

10 N–m (100 kgf–cm, 7 ft–lbf)

5. IF CONDENSER WAS REPLACED, ADD COMPRESSOR OIL TO COMPRESSOR

Add 40 – 50 cc (1.4 –1.7 fl.oz.)

Compressor oil:

ND–OIL 8 or equivalent

6. INSTALL FRONT GRILLE AND CLEARANCE LIGHT

7. EVACUATE AIR FROM AIR CONDITIONING SYSTEM

8. CHARGE AIR CONDITIONING SYSTEM WITH REFRIGERANT AND CHECK FOR GAS LEAKAGE

Specified amount:

750 $\pm$ 50 g (24.69 $\pm$ 1.76 oz.)

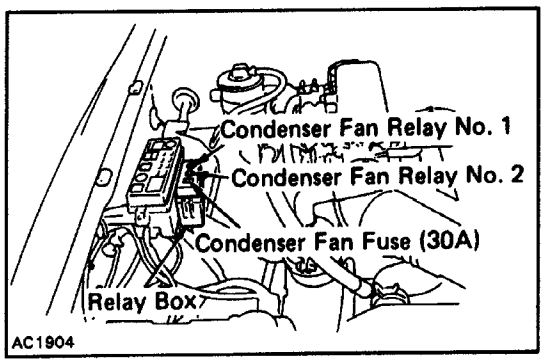

CONDENSER FAN RELAY

CONDENSER FAN RELAYS REMOVAL

1. DISCONNECT NEGATIVE (–) TERMINAL CABLE FROM BATTERY
2. REMOVE CONDENSER FAN RELAYS FROM RELAY BOX

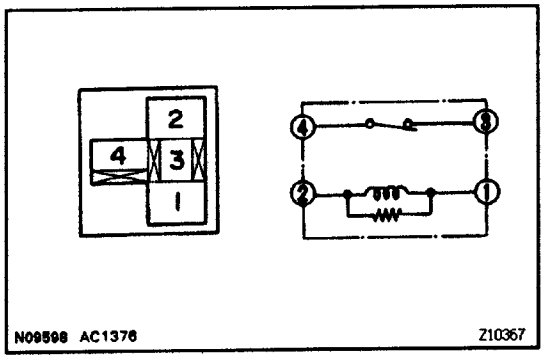

RELAYS INSPECTION

1. INSPECT CONDENSER FAN RELAY NO.1 CONTINUITY

Condition	Tester connection to terminal number	Specified value
Constant	1 – 2 3 – 4	Continuity
Apply B+ between terminals 1 and 2.	3 – 4	No continuity

If continuity is not as specified, replace the relay.

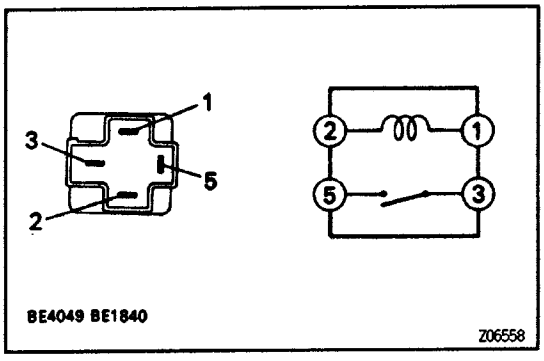

2. INSPECT CONDENSER FAN RELAY NO.2 CONTINUITY

Condition	Tester connection to terminal number	Specified value
Constant	1 – 3	Continuity
Apply B+ between terminals 1 and 3.	2 – 4	Continuity

If continuity is not as specified, replace the relay.

CONDENSER FAN RELAYS INSTALLATION

1. INSTALL CONDENSER FAN RELAYS TO RELAY BOX
2. CONNECT NEGATIVE (–) TERMINAL CABLE TO BATTERY

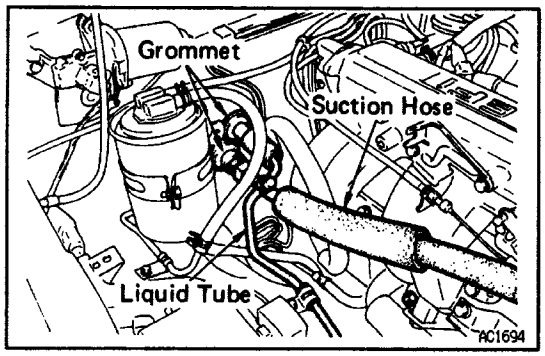

COOLING UNIT

COOLING UNIT REMOVAL

1. DISCONNECT NEGATIVE (–) TERMINAL CABLE FROM BATTERY

2. DISCHARGE REFRIGERANT FROM REFRIGERA–TION SYSTEM

3. DISCONNECT SUCTION TUBE AND LIQUID TUBE FROM COOLING UNIT OUTLET FITTING

4. DISCONNECT LIQUID TUBE FROM COOLING UNIT INLET FITTING

HINT: Cap the open fittings immediately to keep moisture out of the system.

S. REMOVE GROMMETS FROM INLET AND OUTLET FITTINGS

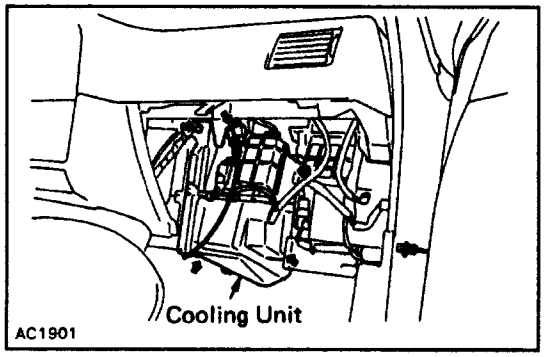

6. REMOVE GLOVE BOX

7. DISCONNECT CONNECTOR

8. REMOVE COOLING UNIT

Remove the 4 screws and a nut.

COOLING UNIT DISASSEMBLY

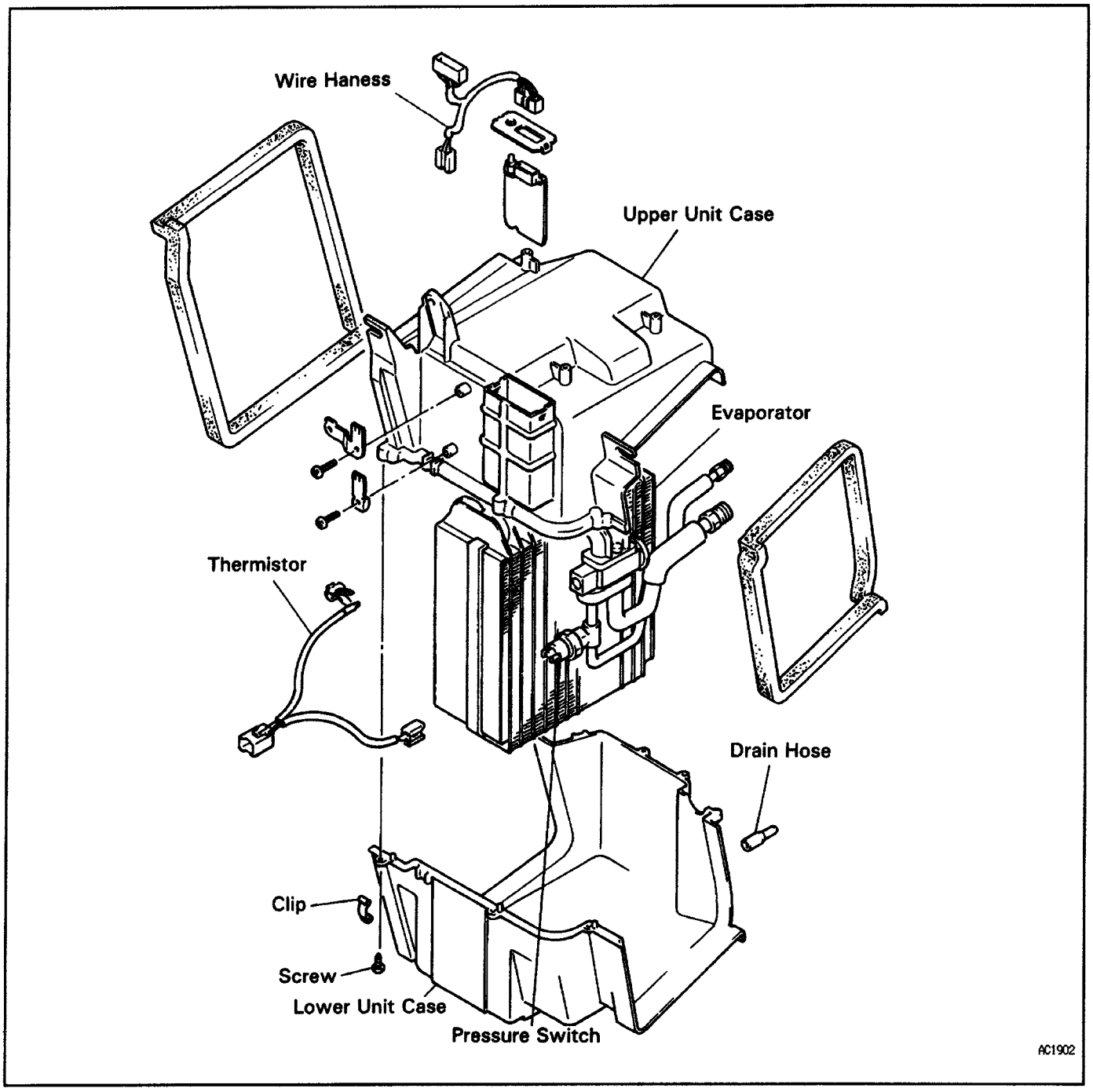

1. REMOVE WIRE HARNESS

2. REMOVE UPPER AND LOWER CASE

(a) Remove the 3 clips.

(b) Remove the 4 screws.

(c) Remove the upper unit case.

(d) Remove the thermistor with the thermistor holder.

(e) Remove the lower unit case.

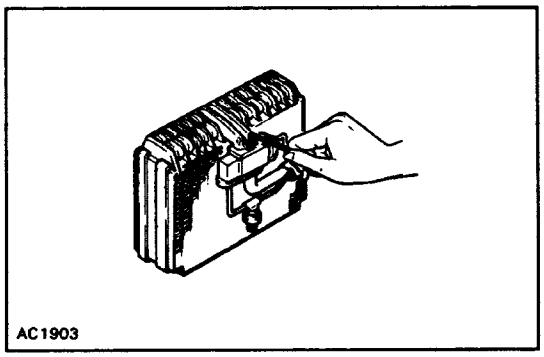

3. REMOVE EXPANSION VALVE

(a) Disconnect the liquid tube from the inlet fitting of the expansion valve.

(b) Remove the packing and the heat sensing tube from the suction tube of the evaporator.

(c) Remove the expansion valve.

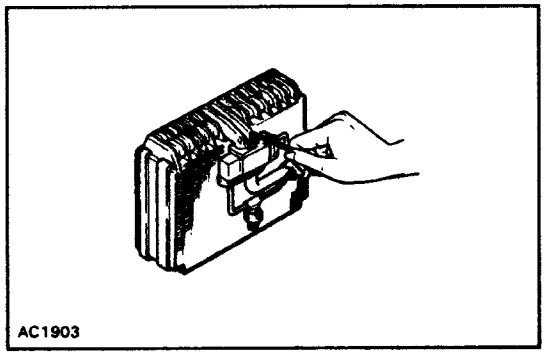

COOLING UNIT ASSEMBLY

1. INSTALL COMPONENTS ON EVAPORATOR

(a) Connect the expansion valve, suction and liquid tube to the evaporator.

Torque: 5.4 N–m (55 kgf–cm, 48 in.–lbf)

HINT: Be sure that the 0–rings are positioned on the tube fitting.

(b) Install the holder to the suction tube with heat sensitizing tube.

(c) Install the lower unit case to the evaporator.

(d) Install the thermistor to the evaporator.

(e) Install the upper unit case.

(f) Install the 4 screws.

(g) Install the 3 clips.

2. INSTALL WIRE HARNESS

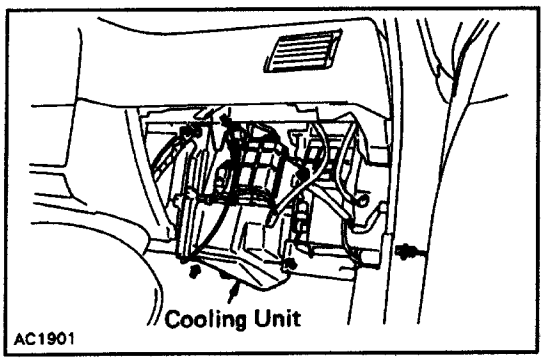

COOLING UNIT INSTALLATION

1. INSTALL COOLING UNIT

Install the cooling unit with the 4 screws and the nut.

2. CONNECT CONNECTORS

3. INSTALL GLOVE BOX

4. INSTALL GROMMETS ON INLET AND OUTLET FITTING

5. CONNECT LIQUID TUBE TO COOLING UNIT INLET FITTING

Torque: 14 N–m (140 kgf–cm, 10 ft–lbf)

6. CONNECT SUCTION TUBE TO COOLING UNIT OUTLET FITTING

Torque: 32 N–m (325 kgf–cm, 24 ft–lbf)

7. IF EVAPORATOR WAS REPLACED, ADD COMPRESSOR OIL TO COMPRESSOR

Add 40–50 cc (1.4–1.7 fl.oz.)

Compressor oil:

ND–OIL 8 or equivalent

8. CONNECT NEGATIVE (–) TERMINAL CABLE TO BATTERY

9. EVACUATE AIR FROM REFRIGERATION SYSTEM

10. CHARGE AIR CONDITIONING SYSTEM WITH REFRIGERANT AND INSPECT FOR GAS LEAKAGE

Specified amount:

700 ± 50 g (24.69 ± 1.76 oz.)

DESCRIPTION

PARTS LOCATION

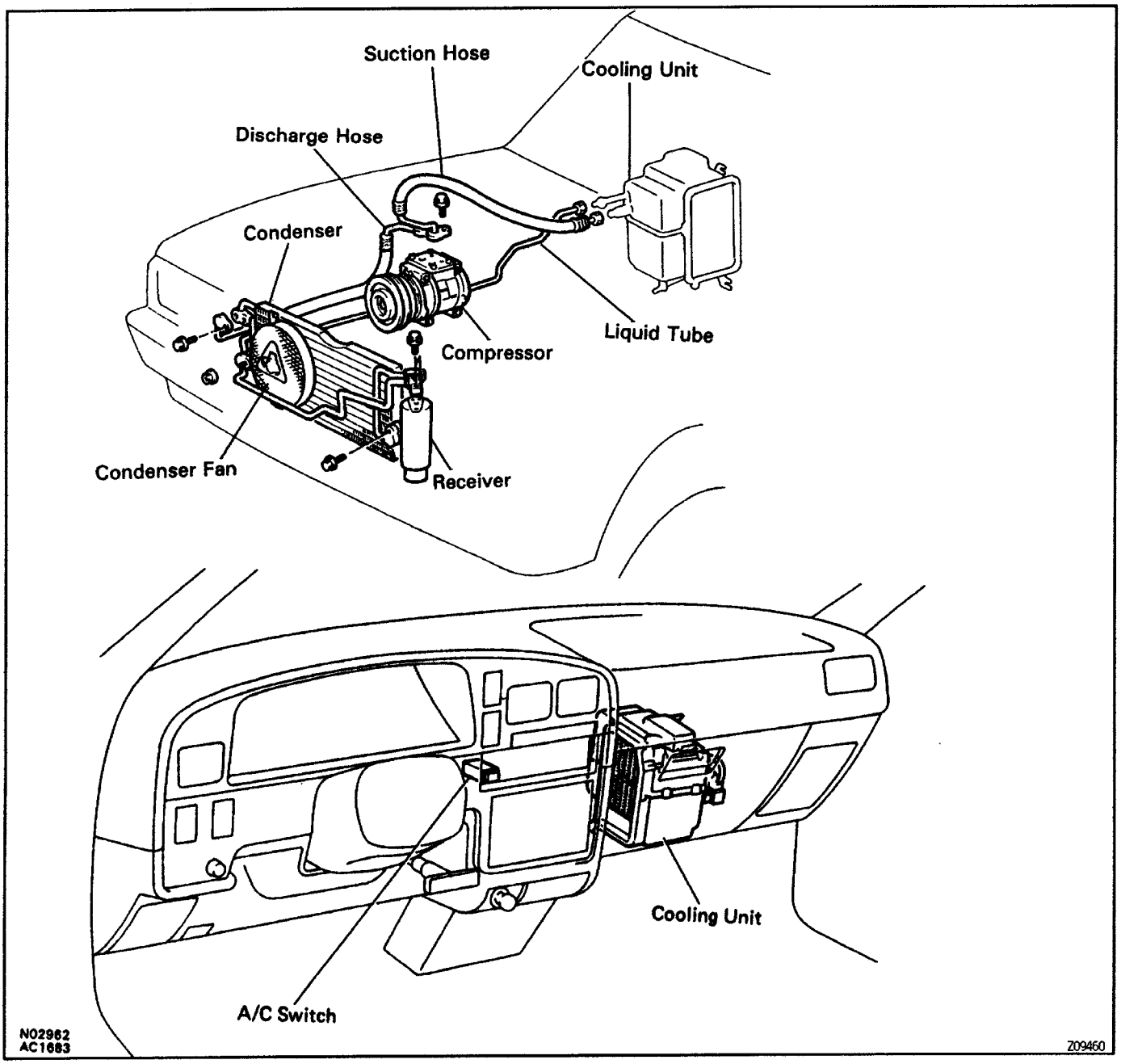

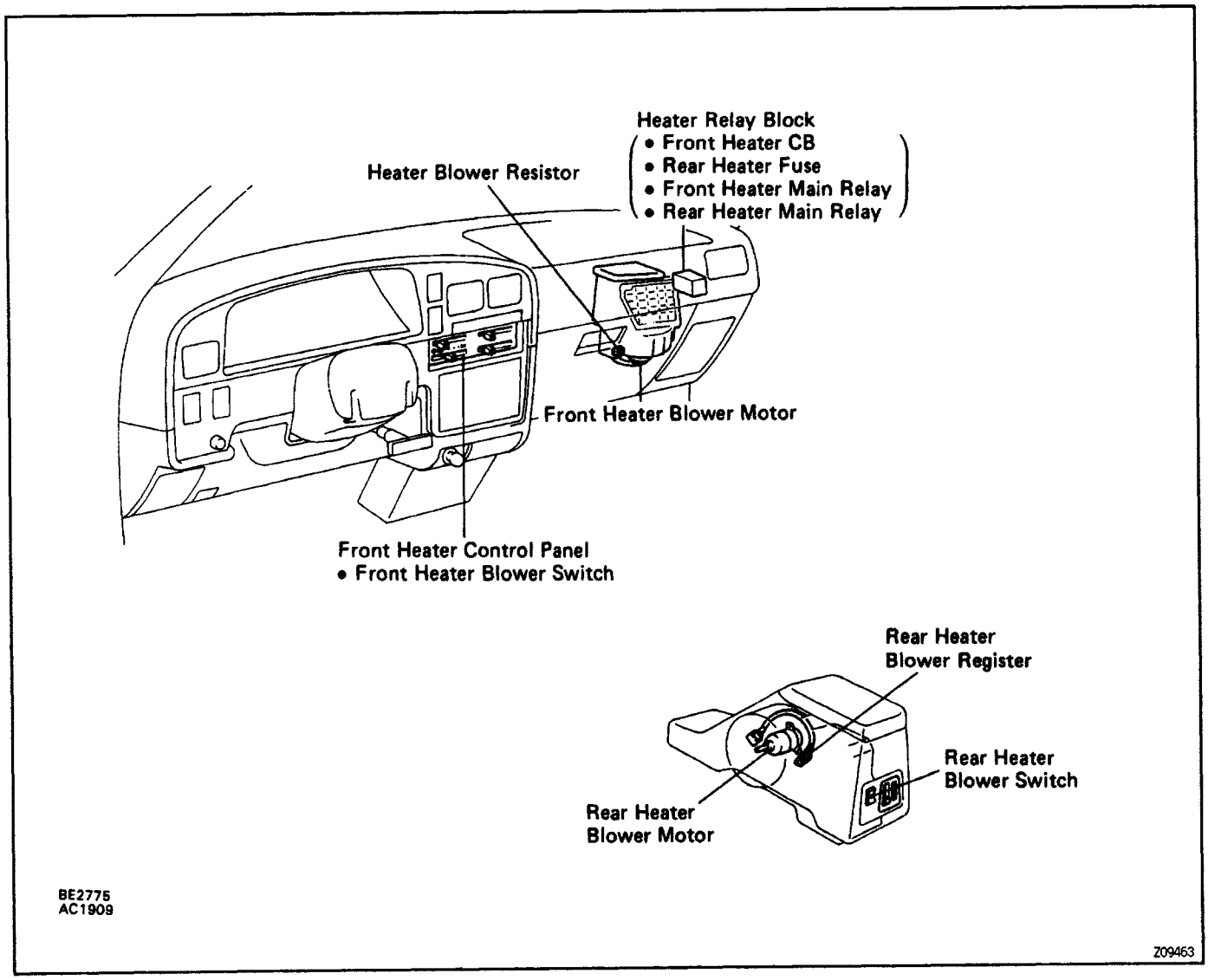
Heater Relay Block
• Front Heater CB
• Rear Heater Fuse
• Front Heater Main Relay
• Rear Heater Main Relay
Heater Blower Resistor
Front Heater Blower Motor
Front Heater Control Panel
• Front Heater Blower Switch
Rear Heater
Blower Register
Rear Heater
Blower Switch
Rear Heater
Blower Motor
BE2775
AC1909
Z09463

DAMPERS POSITION

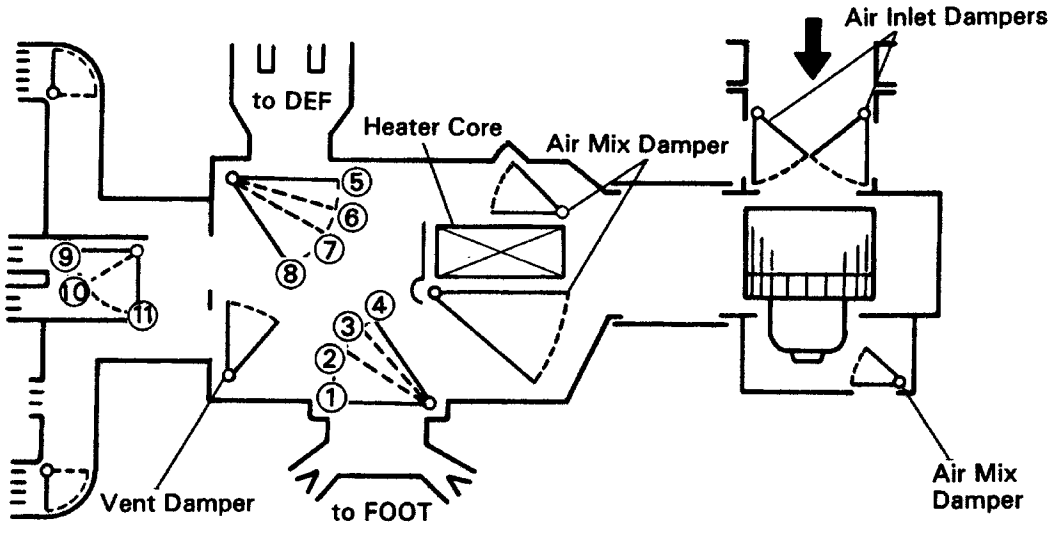

Mode	Air Flow Mode Control Damper Positions	Air Flow Vents				
		Center	Side	Foot	Def.	Center of Driver's seat
Face	① ⑤ ⑨	○	○			○
Bi-Level	② ⑤ ⑩	○	○	○		○
Foot	④ ⑥ ⑪		○	○	○	○
Foot/Def.	③ ⑦ ⑪		○	○	○	○
Def.	① ⑧ ⑪		○		○	○

The size of circle (0) indicates the proportion of the air flow volume.

ELECTRICAL WIRING DIAGRAM

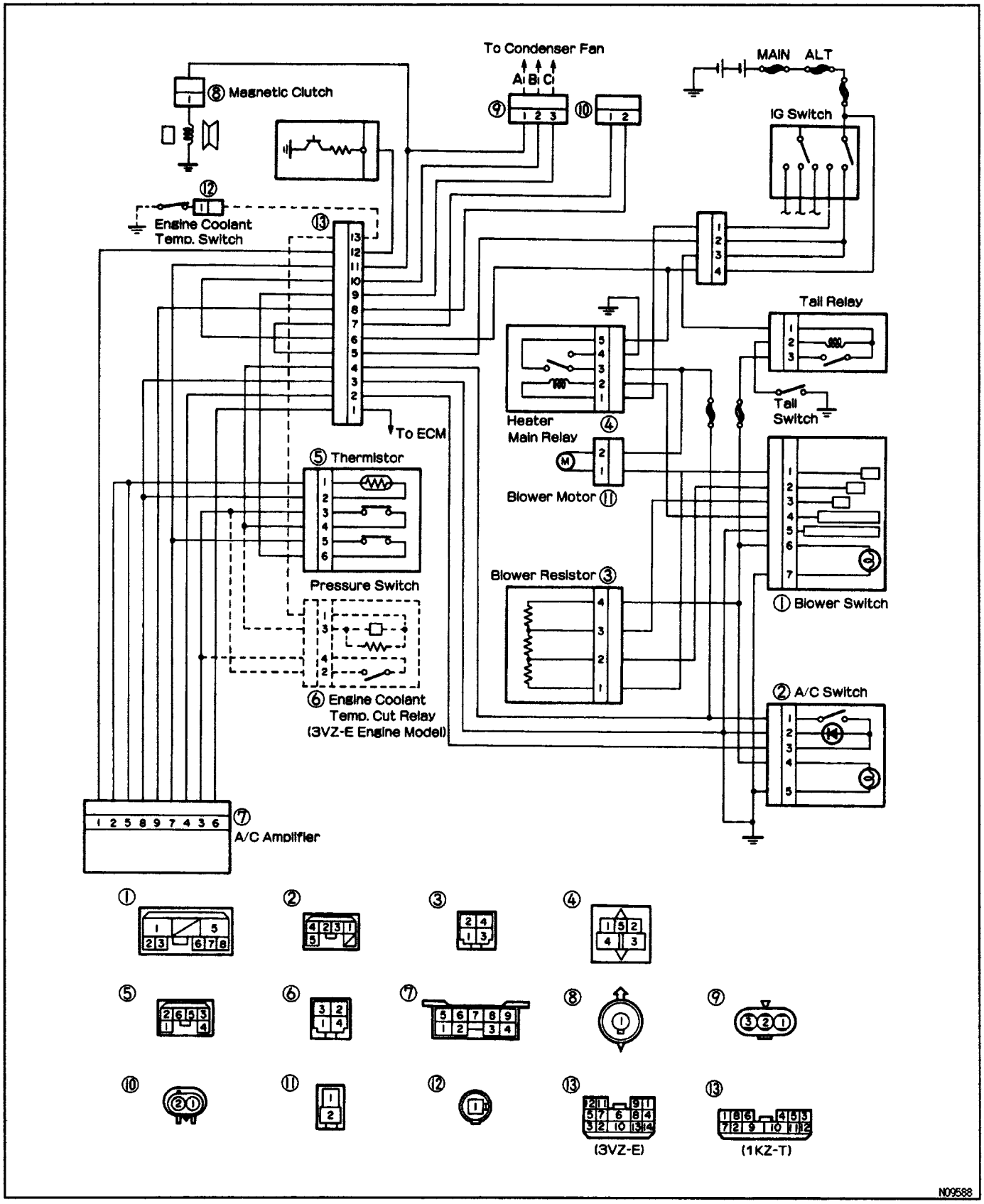

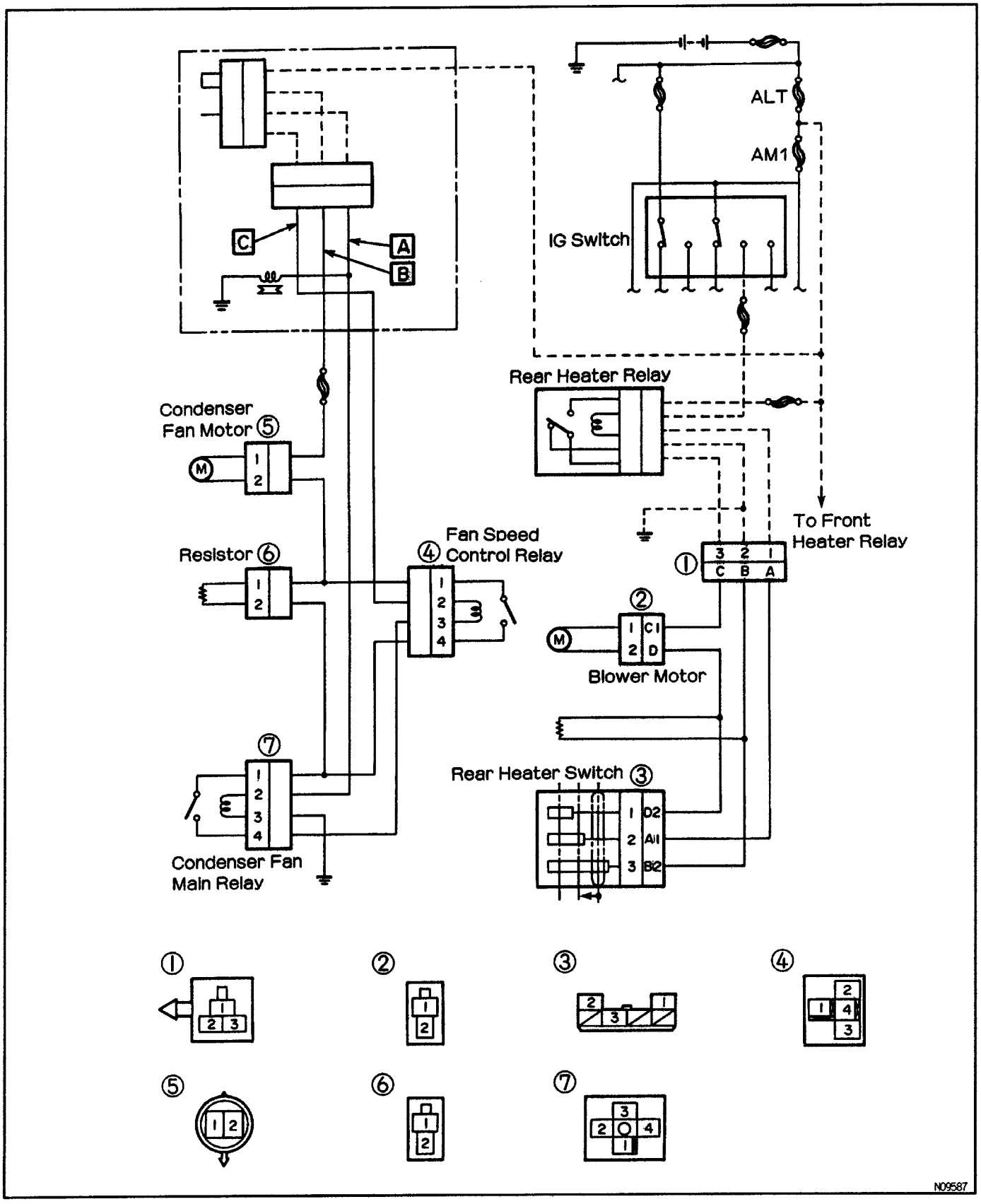
ALT
AM1
IG Switch
C
A
B
Rear Heater Relay
Condenser
Fan Motor ⑤
M
1
2
To Front
Heater Relay
3 2 1
C B A
Resistor ⑥
Fan Speed
④ Control Relay
1
2
3
4
②
M
1 C1
2 D
Blower Motor
⑦
Rear Heater Switch ③
1 D2
2 A11
3 B2
Condenser Fan
Main Relay
①
②
③
④
⑤
⑥
⑦
N09587

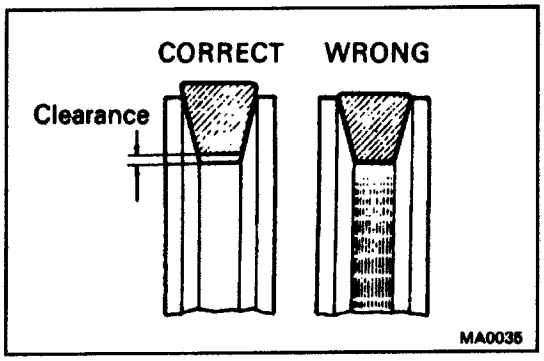

DRIVE BELT TENSION

DRIVE BELT TENSION CHECK

1. INSPECT DRIVE BELT INSTALLATION CONDITION

Check that the drive belts fits properly in the ribbed grooves. Belt does not touch the bottom of the pulley.

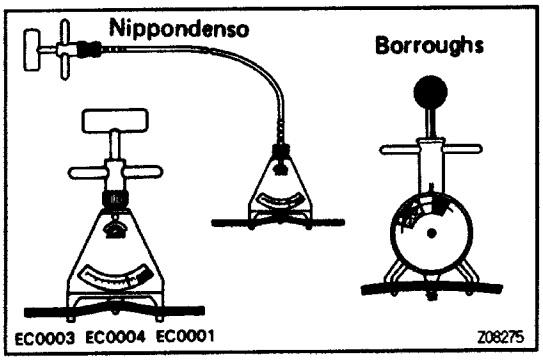

2. CHECK DRIVE BELT TENSION

Using SST, check drive belt tension.

Engine	New belt (lbf)	Used belt (lbf)
3VZ–E Engine	**125 ± 25 lbf**	**80 ± 20**
22R–E Engine	**125 ± 25 lbf**	**80 ± 20**

SST 09216–00020 and 09216–00030

HINT:

- ”New belt” refers to a belt which has been used less than 5 minutes on a running engine.
- ”Used belt” refers to a belt which has been on a running engine for 5 minutes or more.
- After installing the drive belt, check that it fits properly in the ribbed grooves.

IDLE–UP SPEED

IDLE–UP SPEED INSPECTION

1. WARM UP ENGINE

2. SET VEHICLE IN THESE CONDITION:

Blower switch high position

A/C switch on

Magnetic clutch on

3. INSPECT IDLE–UP SPEED

Standard:

950 ± 50 rpm

IDLE–UP SPEED ADJUSTMENT

ADJUST IDLE–UP SPEED

Adjust idle–up speed with the idle adjusting screw of the VSV.

EVAPORATOR

EVAPORATOR REMOVAL AND INSTALLATION

(See page AC–27)

EVAPORATOR INSPECTION

1. CHECK EVAPORATOR FINS FOR BLOCKAGE

If the fins are clogged, clean them with compressed air.

NOTICE: Never use water to clean the evaporator.

2. CHECK FITTINGS FOR CRACKS OR SCRATCHES

Repair as necessary.

EXPANSION VALVE

ON–VEHICLE INSPECTION

1. CHECK QUANTITY OF GAS DURING REFRIGERATION CYCLE

2. INSTALL MANIFOLD GAUGE SET

(See page AC–14)

3. RUN ENGINE

Run the engine at 1,500 rpm for at least 5 minutes. Then check that the high pressure is 1.37 – 1.53 MPa (14 – 16 kg/cm^2, 199 – 228 psi).

4. CHECK EXPANSION VALVE

If the expansion valve is faulty, the low pressure reading will drop to 0 kPa (0 kg/cm^2, 0 psi).

HINT: When the low pressure drops to 0 kPa (0 kg/cm^2, 0 psi), feel the receiver's IN and OUT sides for zero temperature difference.

EXPANSION VALVE REMOVAL AND INSTALLATION

(See pegs AC–27)

EVAPORATOR

EVAPORATOR REMOVAL AND INSTALLATION

(See page AC–27)

EVAPORATOR INSPECTION

1. CHECK EVAPORATOR FINS FOR BLOCKAGE

If the fins are clogged, clean them with compressed air.

NOTICE: Never use water to clean the evaporator.

2. CHECK FITTINGS FOR CRACKS OR SCRATCHES

Repair as necessary.

EXPANSION VALVE

ON–VEHICLE INSPECTION

1. CHECK QUANTITY OF GAS DURING REFRIGERATION CYCLE

2. INSTALL MANIFOLD GAUGE SET

(See page AC–14)

3. RUN ENGINE

Run the engine at 1,500 rpm for at least 5 minutes. Then check that the high pressure is 1.37 – 1.53 MPa (14 – 16 kg/cm^2, 199 – 228 psi).

4. CHECK EXPANSION VALVE

If the expansion valve is faulty, the low pressure reading will drop to 0 kPa (0 kg/cm^2, 0 psi).

HINT: When the low pressure drops to 0 kPa (0 kg/cm^2, 0 psi), feel the receiver's IN and OUT sides for zero temperature difference.

EXPANSION VALVE REMOVAL AND INSTALLATION

(See pegs AC–27)

FRONT BLOWER MOTOR

ON–VEHICLE INSPECTION

1. DISCONNECT NEGATIVE (–) TERMINAL CABLE FROM BATTERY

2. REMOVE FRONT BLOWER MOTOR

(a) Disconnect the connectors from the blower motor and the blower resistor.

(b) Remove the 3 screws and the blower motor.

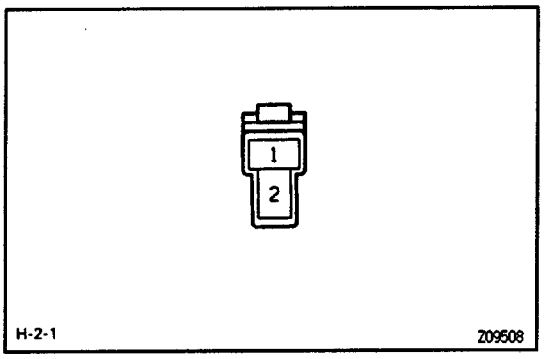

3. INSPECT FRONT BLOWER MOTOR OPERATION

Connect the positive (+) lead from the battery to terminal 1 and the negative (–) lead to terminal 2, then check that the motor operation is smooth.

If operation is not as specified, replace the motor.

REAR BLOWER MOTOR

ON–VEHICLE INSPECTION

1. DISCONNECT NEGATIVE (–) TERMINAL CABLE FROM BATTERY

2. REMOVE REAR BLOWER MOTOR

(a) Remove the console box.

(b) Remove the rear blower motor.

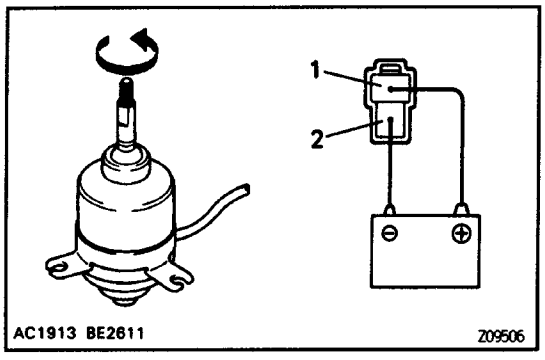

3. INSPECT REAR BLOWER MOTOR OPERATION

Connect the positive (+) lead from the battery to terminal 1 and the negative (–) lead to terminal 2.

then check that the motor operation is smooth.

If operation is not as specified, replace the motor.

AIR CONDITIONING SYSTEM

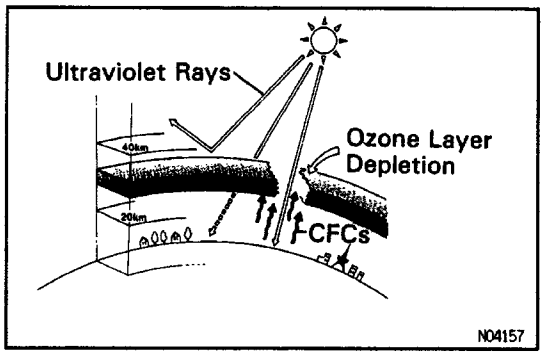

GENERAL DESCRIPTION

NEW AIR CONDITIONING SYSTEM WITH HFC134a

Refrigerant CFC 12 (R 12), previously used in automobiles' air conditioning systems is believed to contribute towards the depletion the earth's ozone layer. The ozone layer help to protect us against the harmful ultraviolet rays of the sun.



A newly developed refrigerant, HFC 134 a (R 134 a), does not destroy the ozone layer.

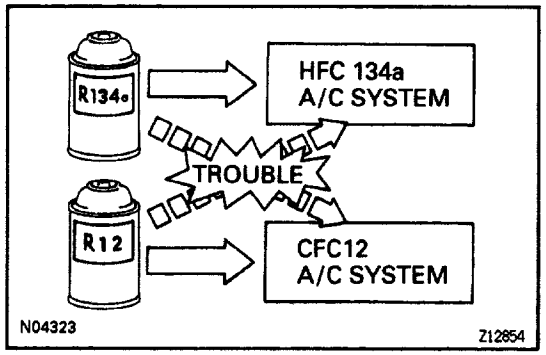

PRECAUTIONS FOR SERVICING HFC134a AIR CONDITIONINGS

1. USE OF NEW REFRIGERANT HFC134a

The very different characteristics of refrigerants HFC134a and CFC12 have determined the design of their respective air conditioning systems. Under no circumstances allow CFC12 to enter an HFC134a system, or vice versa, because serious damage could occur.

2. USE OF PROPER COMPRESSOR OIL

Compressor oil used in conventional CFC12 air conditioning systems cannot be used in HFC134a air conditioning systems.

Always use genuine Toyota R134a air conditioning oil ND–OIL 8, made expressly for use with HFC134a.

NOTICE: Do not drop compressor oil (ND–OIL 8) on to the car it causes the discoloration of the car body surface, or deterioration of the components made from acrylic or ABS plastic.

If even a small amount of the wrong oil is changed, it will result in clouding of the refrigerant.

A large amount will cause the compressor to seize up.

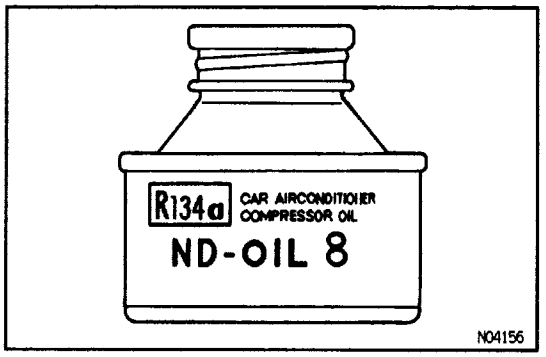

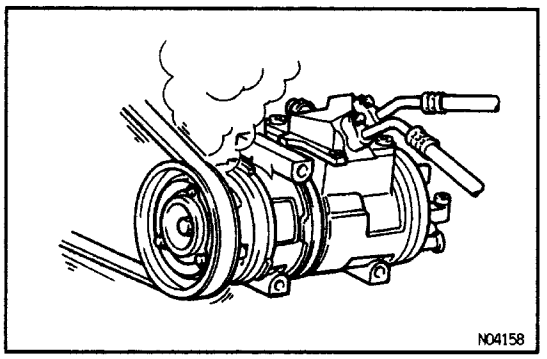

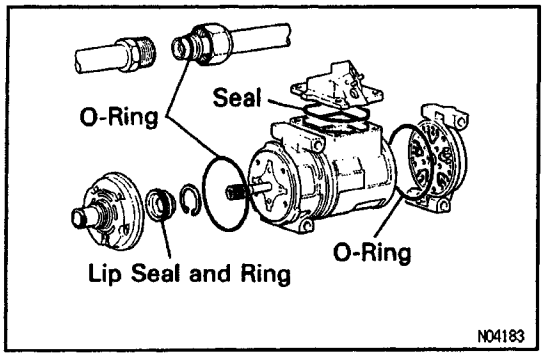

3. USE OF PROPER O – RINGS AND SEALS

0–rings and seals used for conventional CFC12 air conditioning systems can not be used for HFC134a air conditioning systems.

Always use genuine Toyota HFC 134a system 0–rings and seals for HFC134a air conditioning systems.

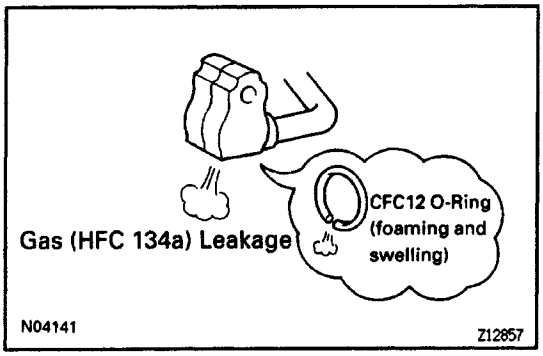

If O–rings and/or seals for CFC12 air conditioning systems are used by mistake in the connections of an HFC134a air conditioning system, the O–ring and seals will foam and swell resulting in leakage of refrigerant.

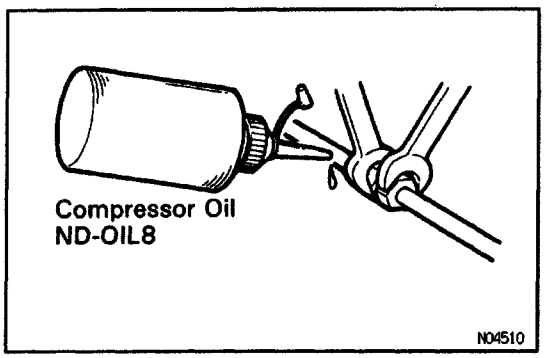

4. TIGHTEN CONNECTING PARTS SECURELY

Securely tighten the connecting parts to prevent leaking of refrigerant gas.

Apply a few drops of compressor oil to 0–ring fittings for easy tightening and to prevent leaking of refrigerant gas.

CAUTION: Apply only ND– OIL 8 compressor oil.

- Tighten the nuts using 2 wrenches to avoid twisting the tube.
- Tighten the 0–ring fittings or the bolted type fittings to the specified torque.

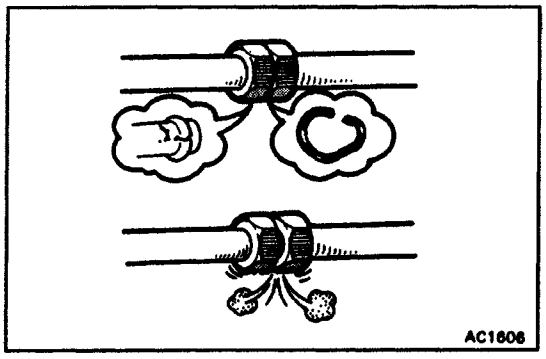

5. INSERT PLUG IMMEDIATELY IN DISCONNECTED PARTS

Insert a plug immediately in the disconnected parts to prevent the ingress of moisture and dust.

6. DO NOT REMOVE PLUG FROM NEW PARTS UNTIL IMMEDIATELY BEFORE INSTALLATION

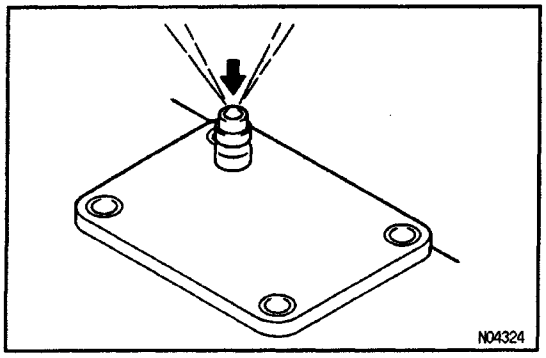

7. DISCHARGE GAS IN NEW COMPRESSOR FROM CHARGING VALVE BEFORE INSTALLING IT

If the gas in the new compressor is not discharged first, compressor oil will spray out with gas when the plug is removed.

SERVICE TOOLS FOR HFC134a AIR CONDITIONER

When servicing HFC134a air conditioning systems always use the HFC134a dedicated manifold gauges, gas leak detector and vacuum pump adaptor.

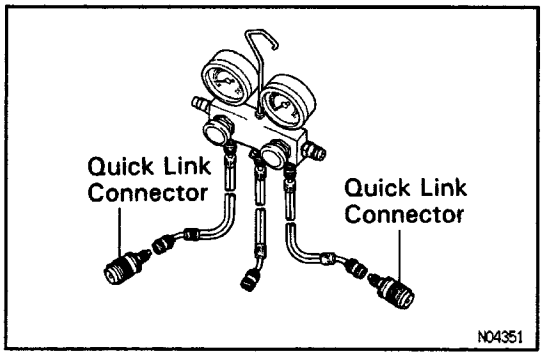

1. USE MANIFOLD GAUGES FOR HFC134a AIR CONDITIONER

Always use H FC 134a dedicated manifold gauges to prevent CFC 12 and CFC 12 compressor oil contaminating the H FC 134a system.

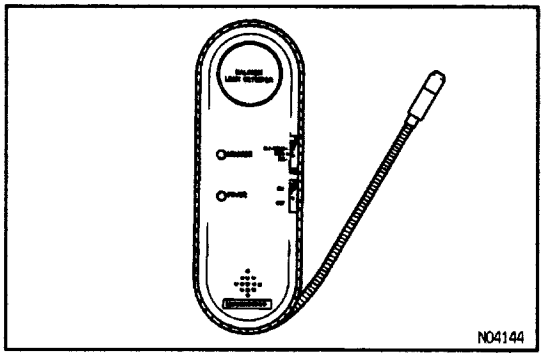

2. USE HFC134a GAS LEAK DETECTOR

Similarly, always use an HFC134a dedicated leak detector. The CFC12 leak detector is not sufficiently sensitive.

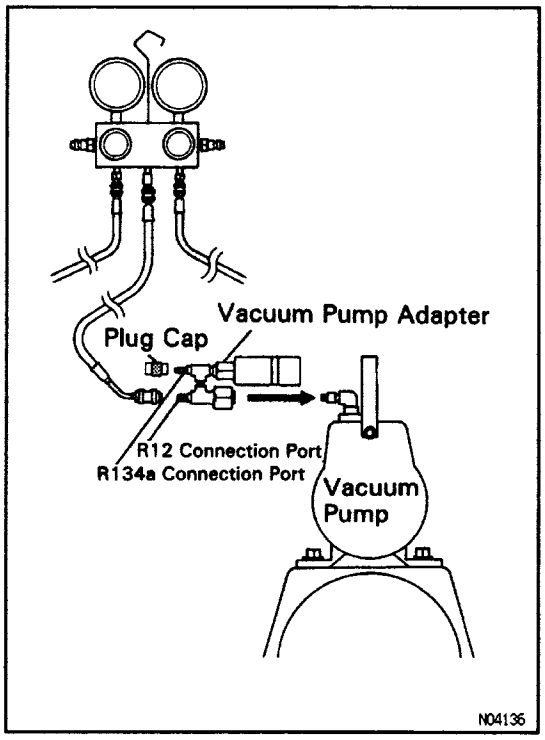

3. USE VACUUM PUMP ADAPTER

By connecting a vacuum pump adapter, the vacuum pump can be used for both HFC134a and CFC12 air conditioning systems.

The vacuum pump adaptor has an internal magnetic valve.

When evacuation is completed and the vacuum pump switch is turned of, the magnetic valve opens allowing the introduction of atmospheric air into the manifold gauges to prevent the back flow of oil from the vacuum pump into the gauge hose.

CAUTION:

Be sure to turn off the manifold gauge valve immediately after evacuating the system. Then you may switch off the vacuum pump. If this order is reversed, the line will be temporarily open to atmosphere.

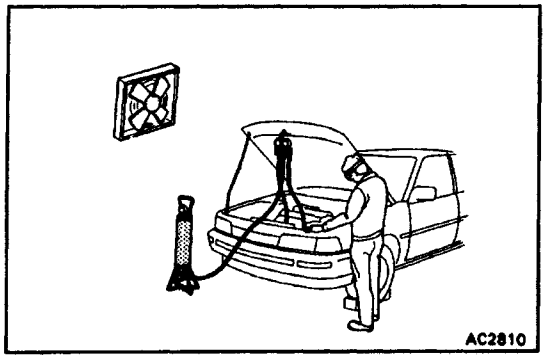

HANDLING PRECAUTIONS FOR REFRIGERANT

1. DO NOT HANDLE REFRIGERANT IN AN ENCLOSED AREA OR NEAR AN OPEN FLAME

2. ALWAYS WEAR EYE PROTECTION

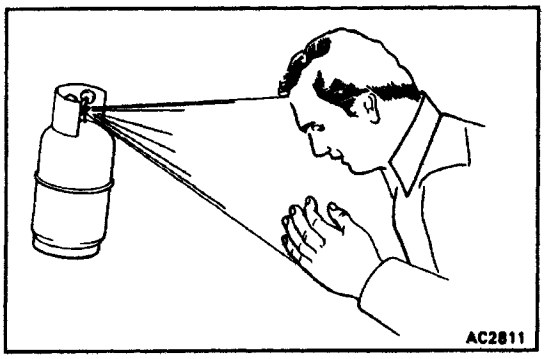

3. BE CAREFUL THAT LIQUID REFRIGERANT DOES NOT GET IN YOUR EYES OR ON YOUR SKIN

If liquid refrigerant gets in your eyes or on your skin:

(a) Wash the area with lots of cool water.

CAUTION: Do not rub your eyes or skin.

(b) Apply clean petroleum jelly to the skin.

(c) Go immediately to a physician or hospital for professional treatment.

HANDLING PRECAUTIONS FOR REFRIGERANT CONTAINER

1. NEVER HEAT CONTAINER OR EXPOSE IT TO NAKED FLAME

2. BE CAREFUL NOT TO DROP CONTAINER AND NOT TO APPLY PHYSICAL SHOCKS TO IT

CHARGING AND LEAK–CHECK METHODS

Evacuate the refrigeration system according to the following procedures.

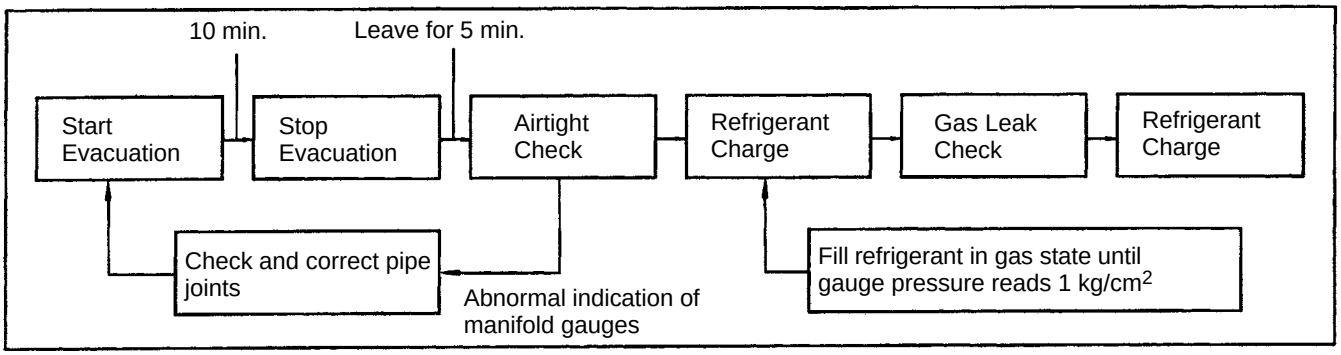

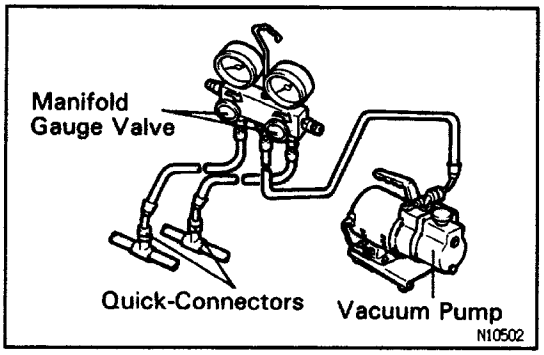

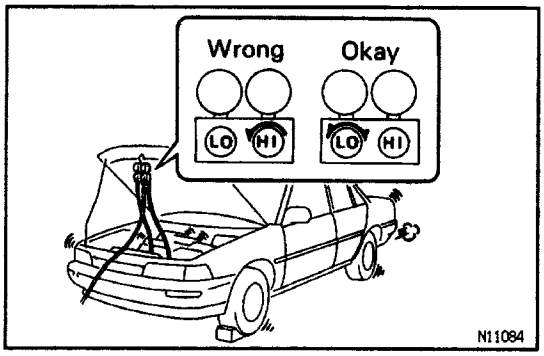

CAUTION:

- **Be sure to connect both the high and low pressure quick– connectors onto the A/C system when evacuating. If only one side is connected, the system would be open to atmosphere through the other connector, making it impossible to maintain vacuum.**
- **Be sure to turn oft the manifold gauge valve immediately after evacuating the system. Then you may switch off the vacuum pump.**

PRECAUTIONS WHEN CHARGING REFRIGERANT

1. DO NOT OPERATE COMPRESSOR WITHOUT ENOUGH REFRIGERANT IN REFRIGERANT SYSTEM

If there is not enough refrigerant in the refrigerant system, oil lubrication will be insufficient and compressor burnout may occur, so take care to avoid this.

2. DO NOT OPEN HIGH PRESSURE MANIFOLD VALVE WHILST COMPRESSOR IS OPERATING

If the high pressure valve is opened, refrigerant flows in the reverse direction and could cause the charging cylinder to rupture, so open and close the low pressure valve only.

3. BE CAREFUL NOT TO OVERCHARGE SYSTEM WITH REFRIGERANT

If refrigerant is overcharged, it causes problems such as insufficient cooling, poor fuel economy, engine overheating etc.

ELECTRICAL PARTS

Before removing and inspecting the electrical parts, set the ignition switch to the LOCK position and disconnect the negative (–) terminal cable from battery.

HEATER MAIN RELAY

FRONT HEATER MAIN RELAY AND REAR HEATER MAIN RELAY REMOVAL

1. DISCONNECT NEGATIVE (–) TERMINAL CABLE FROM BATTERY
2. REMOVE HEATER MAIN RELAYS FROM HEATER RELAY BLOCK

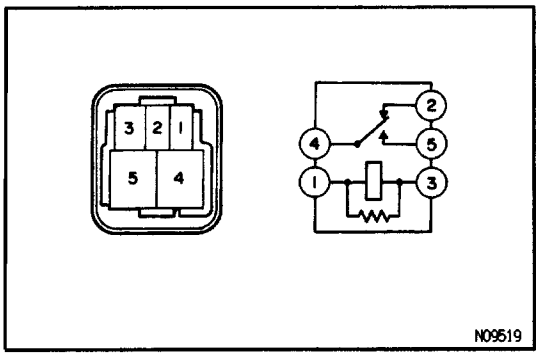

FRONT HEATER MAIN RELAY AND REAR HEATER MAIN RELAY INSPECTION

INSPECT HEATER MAIN RELAYS CONTINUITY

Condition	Tester connection to terminal number	Specified value
Constant	1 – 3 2 – 4	Continuity
Apply B+ between terminals 1 and 3.	4 – 5	Continuity

If continuity is not as specified, replace the relay.

FRONT HEATER MAIN RELAY AND REAR HEATER MAIN RELAY INSTALLATION

1. INSTALL HEATER MAIN RELAYS
2. CONNECT NEGATIVE (–) TERMINAL CABLE TO BATTERY

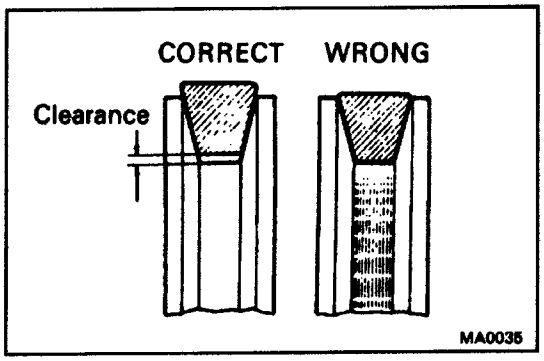

DRIVE BELT TENSION

DRIVE BELT TENSION CHECK

1. INSPECT DRIVE BELT INSTALLATION CONDITION

Check that the drive belts fits properly in the ribbed grooves. Belt does not touch the bottom of the pulley.

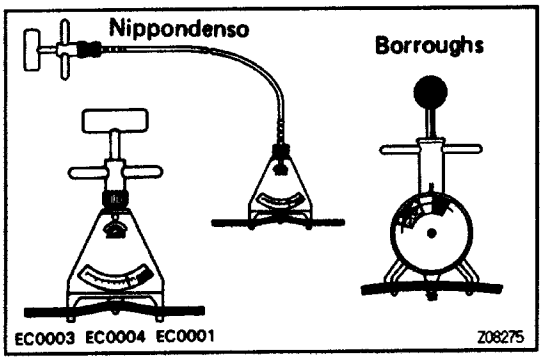

2. CHECK DRIVE BELT TENSION

Using SST, check drive belt tension.

Engine	New belt (lbf)	Used belt (lbf)
3VZ–E Engine	**125 ± 25 lbf**	**80 ± 20**
22R–E Engine	**125 ± 25 lbf**	**80 ± 20**

SST 09216–00020 and 09216–00030

HINT:

- ”New belt” refers to a belt which has been used less than 5 minutes on a running engine.
- ”Used belt” refers to a belt which has been on a running engine for 5 minutes or more.
- After installing the drive belt, check that it fits properly in the ribbed grooves.

IDLE–UP SPEED

IDLE–UP SPEED INSPECTION

1. WARM UP ENGINE

2. SET VEHICLE IN THESE CONDITION:

Blower switch high position

A/C switch on

Magnetic clutch on

3. INSPECT IDLE–UP SPEED

Standard:

950 ± 50 rpm

IDLE–UP SPEED ADJUSTMENT

ADJUST IDLE–UP SPEED

Adjust idle–up speed with the idle adjusting screw of the VSV.

PREPARATION

SST(SPECIAL SERVICE TOOLS)

	07110–58060 Air Conditioner Service Tool Set	
	(07117–78050) Refrigerant Charging Gauge	
	(07117–88060) Refrigerant Charging Hose	Discharge (Red)
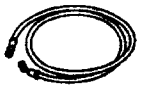	(07117–88070) Refrigerant Charging Hose	Suction (Blue)
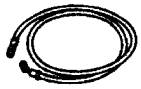	(07117–88080) Refrigerant Charging Hose	Utility (Green)
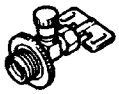	(07117–58060) Refrigerant Drain Service Valve	
	(07117–58080) Quick Coupler	Discharge (diam. 16 mm)
	(07117–58090) Quick Coupler	Suction (diam. 13 mm)
	(07117–58070) T–Joint	
	07116–38360 Gas Leak Detector Assembly	
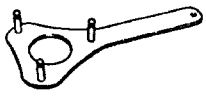	07112–76060 Magnetic Clutch Stopper	
	07112–66040 Magnetic Clutch Remover	
	07114–84020 Snap Ring Pliers	

	**07114–84010** Snap Ring Pliers	

RECOMMENDED TOOL

	**09082–00050** TOYOTA Electrical Tester Set.	

LUBRICANT

Item	Capacity	Classification
Compressor oil	–	ND–OIL 8 or equivalent
When replacing receiver	**10 cc (0.4 fl.oz.)**	
When replacing condenser	**40 cc (1.4 fl.oz.)**	
When replacing evaporator	**40 cc (1.4 fl.oz.)**	
When replacing compressor	**140 cc (4.8 fl.oz.)**	

PRESSURE SWITCH

ON–VEHICLE INSPECTION

1. DISCONNECT NEGATIVE (–) TERMINAL CABLE FROM BATTERY

2. REMOVE GLOVE BOX

3. DISCONNECT CONNECTOR FROM PRESSURE SWITCH

4. INSTALL MANIFOLD GAUGE SET

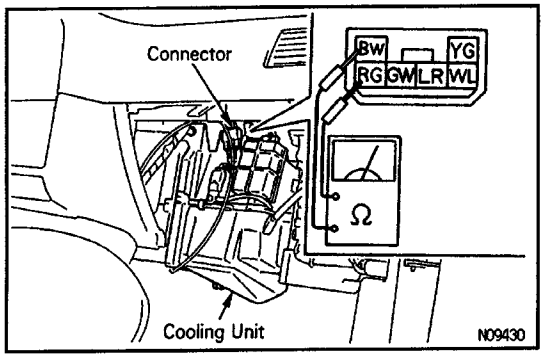

5. INSPECT PRESSURE SWITCH

Magnetic Clutch Control:

Check that there is continuity between the terminal when the A/C switch is off.

Check that the high side pressure at this time is 196 – 3,138 kPa (2.0 – 32 kgf/cm^2, 29 – 457 psi).

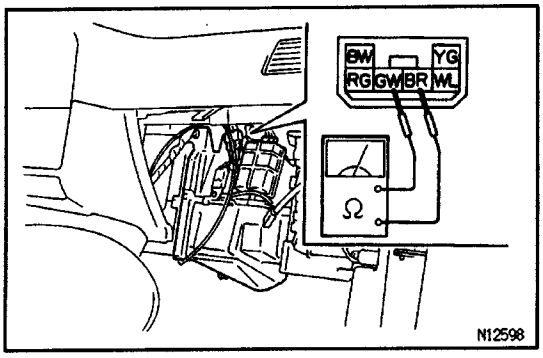

Cooling Fan Control:

(a) Check that there is continuity between the terminals when the air conditioning switch is off.

HINT: Check that the high side pressure at this time is 1,226 kPa (112.5 kgf/cm^2, 178 psi).

(b) Check that there is no continuity between the terminals when the air conditioning switch is on.

HINT: Check that the high side pressure at this time is 1,520 kPa (1155 kgf/cm^2, 220 psi).

6. REMOVE MANIFOLD GAUGE SET

7. CONNECT CONNECTOR TO PRESSURE SWITCH

PRESSURE SWITCH REMOVAL AND INSTALLATION

(See page AC–28)

FRONT BLOWER MOTOR

ON–VEHICLE INSPECTION

1. DISCONNECT NEGATIVE (–) TERMINAL CABLE FROM BATTERY

2. REMOVE FRONT BLOWER MOTOR

(a) Disconnect the connectors from the blower motor and the blower resistor.

(b) Remove the 3 screws and the blower motor.

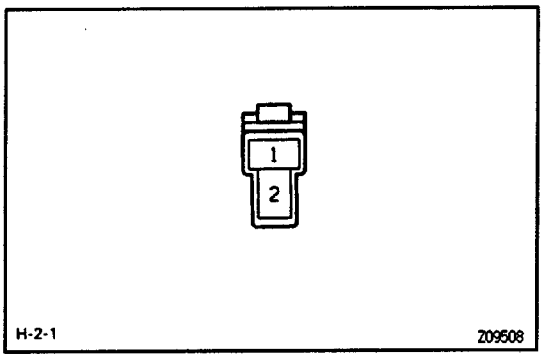

3. INSPECT FRONT BLOWER MOTOR OPERATION

Connect the positive (+) lead from the battery to terminal 1 and the negative (–) lead to terminal 2, then check that the motor operation is smooth.

If operation is not as specified, replace the motor.

REAR BLOWER MOTOR

ON–VEHICLE INSPECTION

1. DISCONNECT NEGATIVE (–) TERMINAL CABLE FROM BATTERY

2. REMOVE REAR BLOWER MOTOR

(a) Remove the console box.

(b) Remove the rear blower motor.

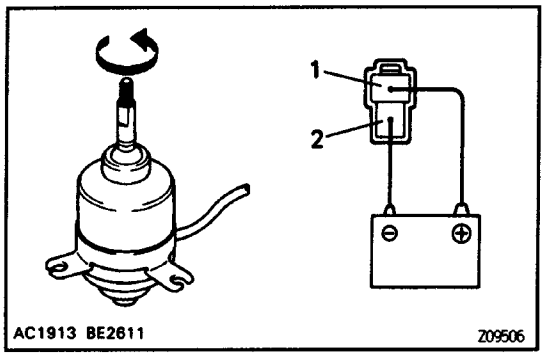

3. INSPECT REAR BLOWER MOTOR OPERATION

Connect the positive (+) lead from the battery to terminal 1 and the negative (–) lead to terminal 2.

then check that the motor operation is smooth.

If operation is not as specified, replace the motor.

RECEIVER

ON–VEHICLE INSPECTION

CHECK SIGHT GLASS, FUSIBLE PLUG AND FITTING FOR LEAKAGE

Using a gas leak tester, replace as necessary.

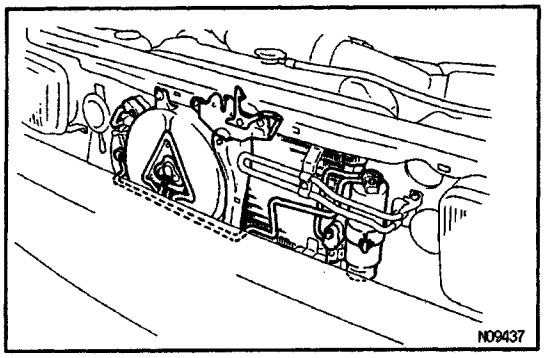

RECEIVER REMOVAL

1. **DISCHARGE REFRIGERANT FROM REFRIGERATION SYSTEM**
2. **REMOVE CLEARANCE LIGHTS AND FRONT GRILLE**
3. **DISCONNECT 2 LIQUID TUBE FROM RECEIVER**

   NOTICE: Cap the open fittings immediately to keep moisture out of the system.
4. **REMOVE RECEIVER FROM RECEIVER HOLDER**

RECEIVER INSTALLATION

1. **INSTALL RECEIVER IN RECEIVER HOLDER**

   HINT: Do not remove the blind plugs until ready for connection.
2. **CONNECT 2 LIQUID TUBES TO RECEIVER**

   Torque: 8.4 N–m (55 kgf–cm, 48 in.–lbf)
3. **IF RECEIVER WAS REPLACED, ADD COMPRESSOR OIL TO COMPRESSOR**

   Add 20 cc (0.71 fl–oz.)

   Compressor oil:

   ND–OIL 8 or equivalent
4. **EVACUATE AIR FROM REFRIGERATION SYSTEM**
5. **CHARGE AIR CONDITIONING SYSTEM WITH REFRIGERANT AND CHECK FOR GAS LEAKAGE**

   Specified amount:

   750 ± 50 g (26.89 ± 1.76 oz.)

REFRIGERANT LINES

TIGHTENING TORQUE OF REFRIGERATION LINES

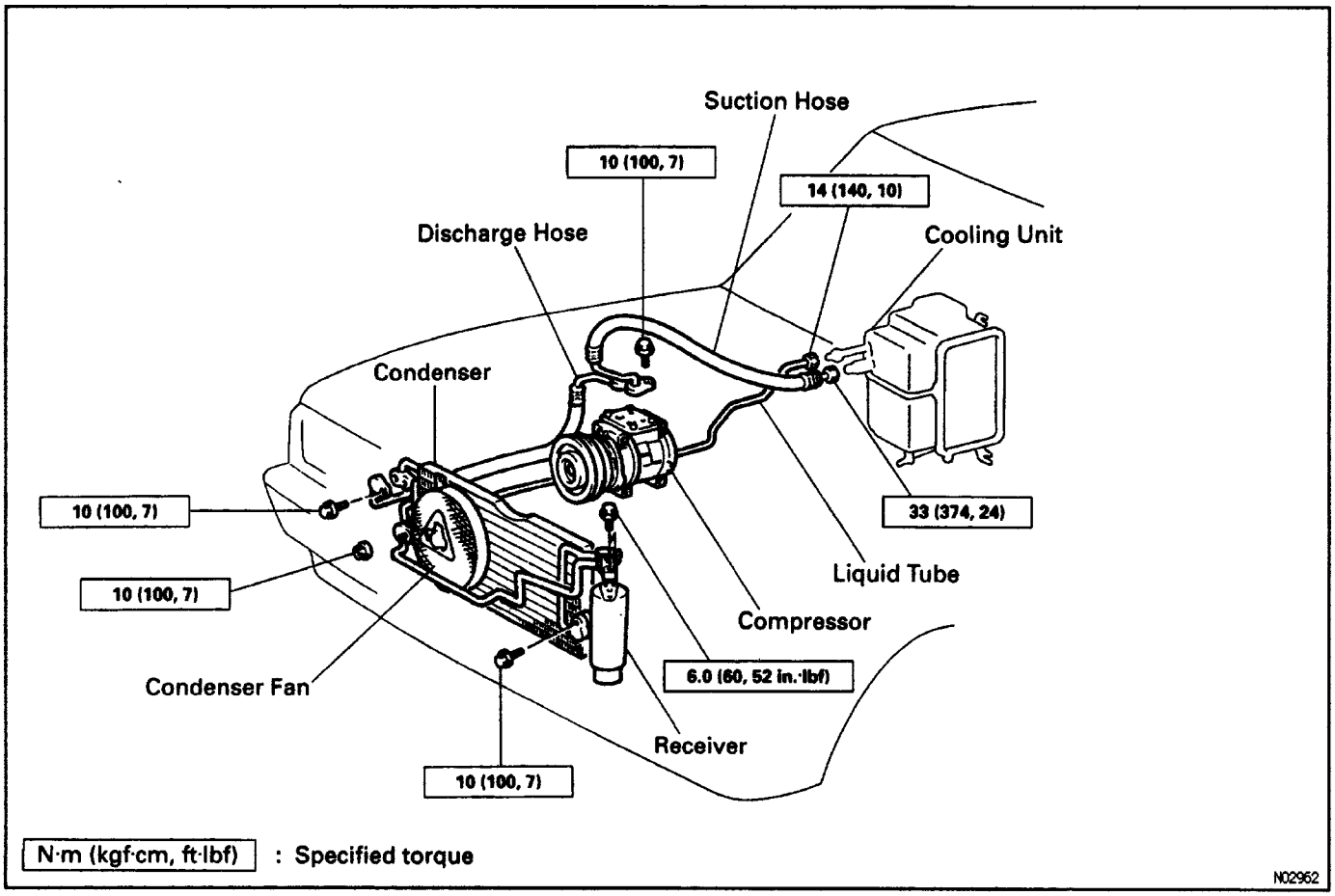

ON–VEHICLE INSPECTION

1. INSPECT HOSES AND TUBES FOR LEAKAGE

Using a gas leak tester, check for leakage of refrigerant.

2. CHECK THAT HOSE AND TUBE CLAMPS ARE NOT LOOSE

Tighten or replace, as necessary.

REFRIGERANT LINES REPLACEMENT

1. DISCHARGE REFRIGERANT FROM REFRIGERATION SYSTEM

2. REPLACE FAULTY TUBE OR HOSE

HINT: Cap the open fittings immediately to keep moisture or dirt out of the system.

3. TIGHTENING TORQUE FOR O – RING FITTINGS AND BOLTED TYPE FITTINGS

(See page AC–24)

4. EVACUATE AIR FROM AIR CONDITIONING SYSTEM

5. CHARGE AIR CONDITIONING SYSTEM WITH REFRIGERANT AND CHECK FOR GAS LEAKAGE

Specified amount:

700 ± 50 9 (24.69 ± 1.76 oz.)

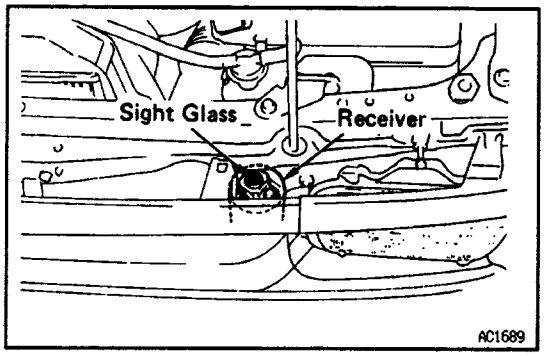

REFRIGERANT VOLUME

REFRIGERANT VOLUME INSPECTION

1. RUN ENGINE AT APPROX. 1,500 RPM
2. SET TEMPERATURE CONTROL AT MAX. COOL
3. SET BLOWER SWITCH AT "HI'
4. SET AIR INLET CONTROL AT 'RECIRC'
5. TURN A/C SWITCH ON
6. FULLY OPEN DOORS
7. INSPECT AMOUNT OF REFRIGERANT

Observe the sight glass on the liquid tube.

Item	Symptom	Amount of refrigerant	Remedy
1	Bubbles present in sight glass	insufficient*	(1) Check for gas leakage with gas leak tester and repair if necessary (2) Add refrigerant until bubbles disappear
2	No bubbles present in sight glass	None, sufficient or too much	Refer to items 3 and 4
3	No temperature difference between compressor inlet and outlet	Empty or nearly empty	(1) Check for gas leakage with gas leak tester and repair if necessary (2) Add refrigerant until bubbles disappear
4	Temperature between compressor inlet and outlet is noticeably different	Correct or too much	Refer to items 5 and 6
5	Immediately after air conditioning is turned off, refrigerant in sight glass stays clear	Too much	(1) Discharge refrigerant (2) Evacuate air and charge proper amount of purified refrigerant
6	When air conditioning is turned off, refrigerant foams and then stays clear	Correct	–

*Bubbles in the sight glass with ambient temperatures higher than can be considered normal if cooling is sufficient.

REFRIGERANT CHARGE VOLUME

Specified amount:

700 ± 50 g (24.69 ± 1.76 oz.)

SERVICE SPECIFICATIONS

SERVICE DATA

Refrigerant charge volume	700±50 g (24.69±1.76 oz.)
Drive belt tension	
3VZ – E E/G:	
New belt	125 ± 25 lbf
Used belt	80 ± 20 lbf
22R–E E/G:	
New belt	125 ± 25 lbf
Used belt	80 ± 20 lbf
Idle up speed	950 ± 50 rpm
Magnetic clutch clearance	0.5 ± 0.15 mm (0.020 ± 0.0059 in.)

TORQUE SPECIFICATIONS

Part tightened	N·m	kgf·cm	ft·lbf
Compressor and Compressor Bracket x Engine	37	375	27
Compressor x Compressor bracket	25	250	18
Compressor bracket x Engine	47	475	34
Idle pulley lock nut	39	400	29
Suction and Discharge hose x Compressor	25	250	18
Suction hose x A/C unit	32	325	24
Discharge hose x Condenser	18.5	185	14
Liquid tube x Receiver	5.4	55	48 in.·lbf
Liquid tube x Condenser	5.4	55	48 in.·lbf
Liquid tuba x A/C unit	14	140	10
Expansion valve x Evaporator	23	235	17
Expansion valve x Liquid tube	13	135	10

THERMISTOR

ON–VEHICLE INSPECTION

1. DISCONNECT NEGATIVE (–) TERMINAL CABLE FROM BATTERY

2. REMOVE GLOVE BOX

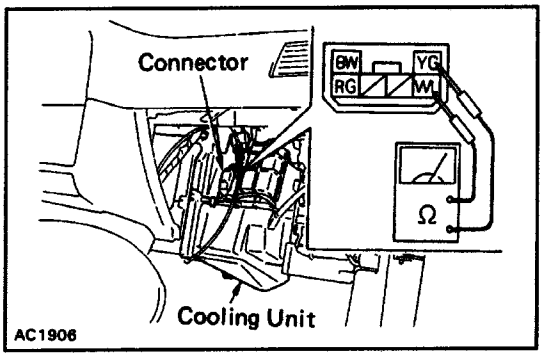

3. DISCONNECT CONNECTOR FROM THERMISTOR

4. CHECK RESISTANCE THERMISTOR

Measure the resistance between 1 and 2 terminals.

Standard resistance:

1,500 Ω at 25 ° C (77°F)

If resistance is not as specified, replace the thermistor.

THERMISTOR REMOVAL AND INSTALLATION

(See page AC–27)

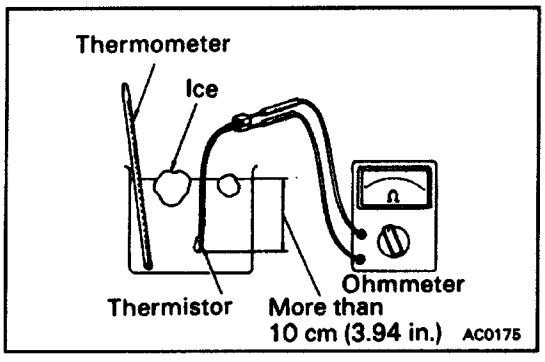

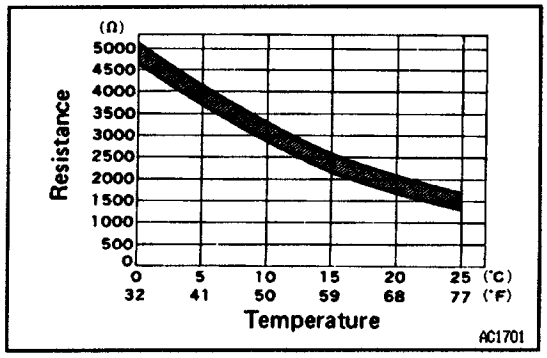

THERMISTOR INSPECTION

INSPECT THERMISTOR RESISTANCE

(a) Place the thermistor in cold water, while varying the temperature of the water, measure the resistance at the connector and at the same time, measure the temperature of the water with a thermometer.

(b) Compare the 2 readings on the chart.

If the resistance value is not as specified, replace the thermistor.

TROUBLESHOOTING

Use the table below to help you find the cause of the problem. The numbers indicate the priority of the likely cause of the problem. Check each part in order. If necessary, replace these parts.

See Page / Part Name / Trouble	Inspect volume of refrigerant (AC–17)	Inspect drive belt tension (AC–23)	Inspect engine coolant volume (–)	Inspect A/C control lever adjustment (AC–51)	Inspect outlet air control	Heater main relay (AC–48)	Blower speed control switch (AC–52)	Blower resistor (AC–44)	Blower motor (AC–43)	Inspect cooing system for refrigerant	Condenser fan fuse (–)	Radiator fan main relay (–)	Condenser fan relay No. 2 (AC–49)	Condenser fan relay No. 3 (AC–49)	Condenser fan motor (AC–46)
No blower operation						1	4	3	2						
No air temperature control			1	2											
No compressor operation	1					7	9								
Compressor operates intermittently	1									2					
No condenser fan operation											1	2	3	4	6
No cool air comes out	1	2													
Cool air comes out intermittently	1	2													
Cool air comes out only at high engine rpm	1	2													
insufficient cooling	1	2								3					
No engine idle up when A/C switch on															
No warm air comes out			1	2											

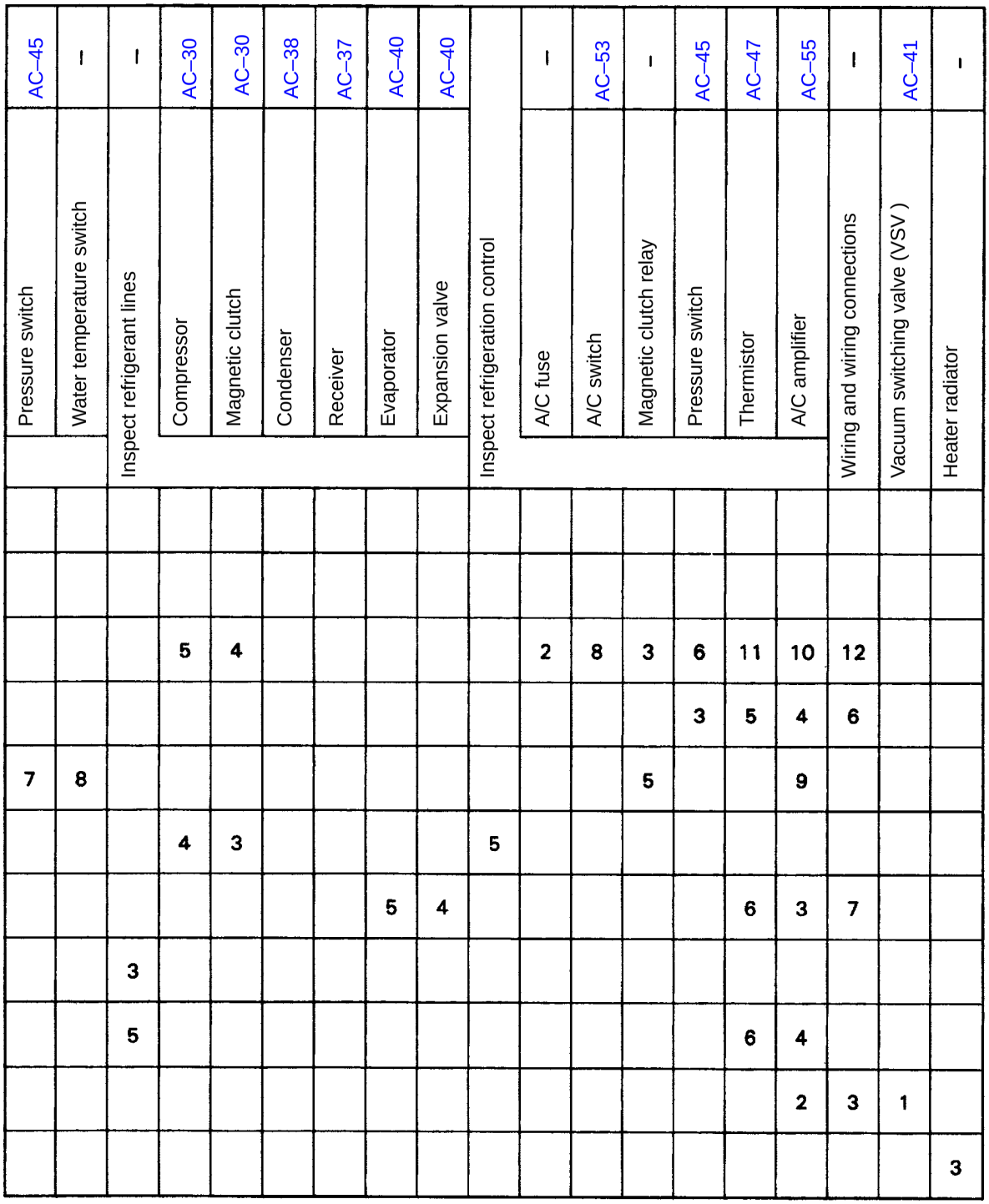
Pressure switch
AC–45
Water temperature switch
–
Inspect refrigerant lines
–
Compressor
AC–30
Magnetic clutch
AC–30
Condenser
AC–38
Receiver
AC–37
Evaporator
AC–40
Expansion valve
AC–40
Inspect refrigeration control
–
A/C fuse
A/C switch
AC–53
Magnetic clutch relay
–
Pressure switch
AC–45
Thermistor
AC–47
A/C amplifier
AC–55
Wiring and wiring connections
–
Vacuum switching valve (VSV)
AC–41
Heater radiator
–
7 8
5 4
2 8 3 6 11 10 12
3 5 4 6
5 9
4 3 5
5 4 6 3 7
3
5 6 4
2 3 1
3

REFRIGERANT SYSTEM INSPECTION WITH MANIFOLD GAUGE SET

This is a method in which the trouble is located by using a manifold gauge set.

(See ”USE OF MANIFOLD GAUGE SET” on page AC–14)

Read the manifold gauge pressure when the following conditions are established:

(a) Temperature at the air inlet with the switch set at RECIRC is 30 – 35 ˚C (86 – 95 ˚F)

(b) Engine running at 1,500 rpm

(c) Blower speed control switch set at high

(d) Temperature control set at max. cool

HINT: It should be noted that the gauge indications may vary slightly due to ambient temperature conditions.

1. NORMALLY FUNCTIONING REFRIGERATION SYSTEM

Gauge reading:

Low pressure side:

0.18 – 0.25 MPa (1.5 – 2.5 kgf/cm^2)

High pressure side:

1.37 – 1.57 MPa (14 – 16 kgf/cm^2)

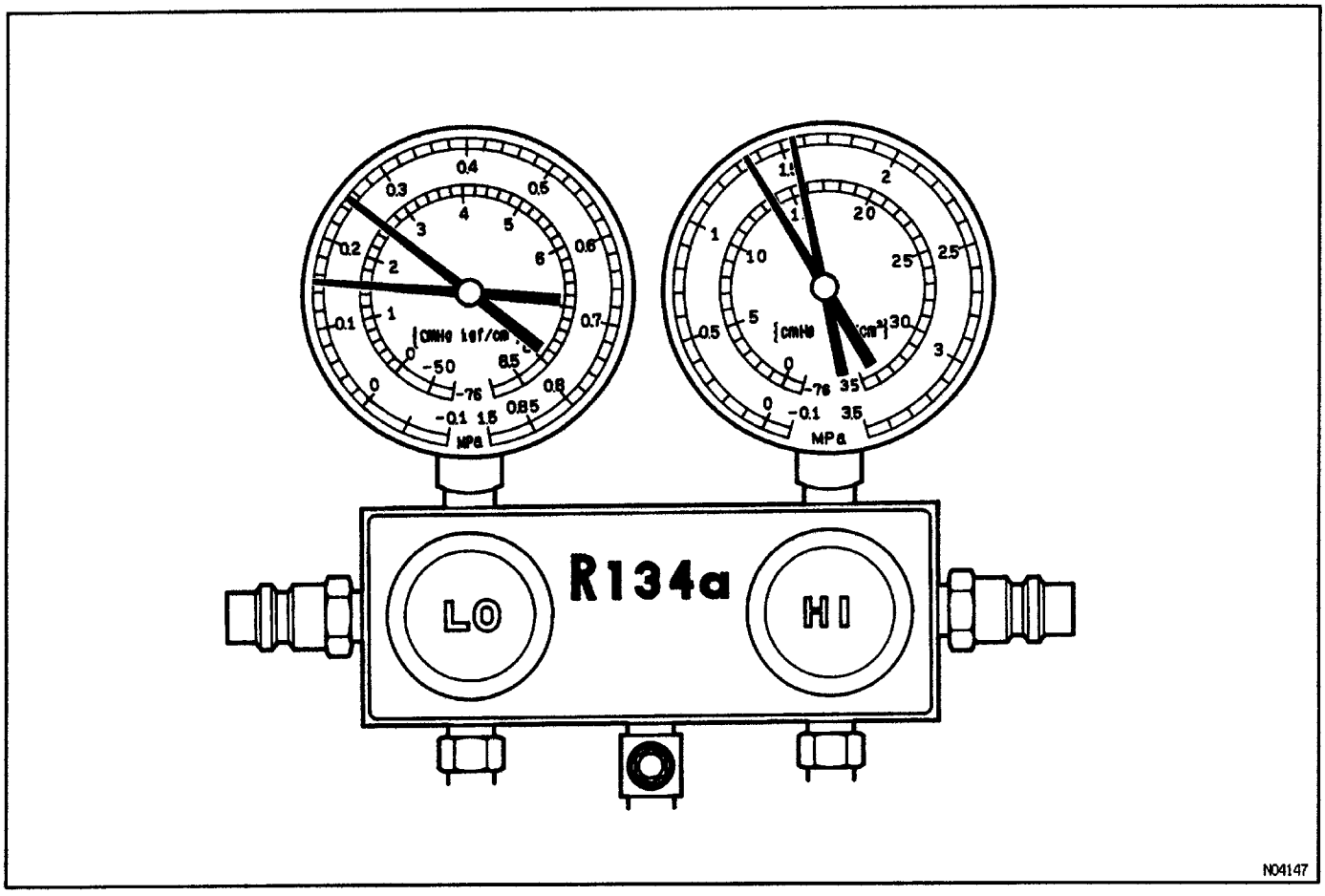

2. MOISTURE PRESENT IN REFRIGERATION SYSTEM

Condition: Periodically cools and then fails to cool

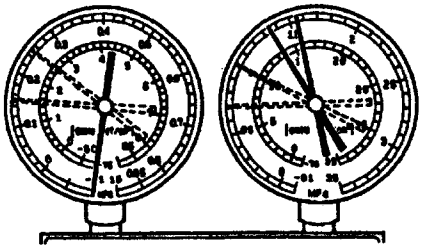

Symptom seen in refrigeration system	Probable cause	Diagnosis	Remedy
• During operation, pressure on low pressure side sometimes becomes a vacuum and sometimes normal	• Moisture entered in refrigeration system freezes at expansion valve orifice and temporarily stops cycle, but normal state is restored after a time when .the ice melts	• Drier In oversaturated state ↓ • Moisture in refrigeration • system freezes at expansion valve orifice and blocks circulation of refrigerant	(1) Replace receiver/drier (2) Remove moisture in cycle through repeat–edly evacuating air (3) Charge new refrigerant to proper amount

3. INSUFFICIENT REFRIGERANT

Condition: Insufficient cooling

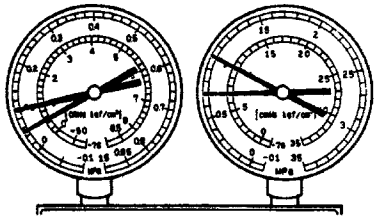

Symptom seen in refrigeration system	Probable cause	Diagnosis	Remedy
• Pressure low on both low and high pressure sides • Bubbles seen in sight glass continuously • Insufficient cooling performance	• Gas leakage at some place in refrigeration system	• Insufficient refrigerant in system ↓ • Refrigerant leaking	(1) Check for gas leakage with leek detector and repair if necessary (2) Charge refrigerant to proper amount (3) If pressure indicated value is near 0 when connected to gauge, create the vacuum after inspecting and repairing the location of the leak

4. POOR CIRCULATION OF REFRIGERANT

Condition: Insufficient cooling

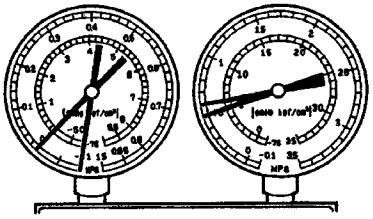

Symptom seen in refrigeration system	Probable cause	Diagnosis	Remedy
• Pressure low on both low and high pressure sides • Frost on tubes from receiver to unit	• Refrigerant flow obstructed by dirt in receiver	• Receiver clogged	• Replace receiver

5. REFRIGERANT DOES NOT CIRCULATE

Condition: Does not cool (Cools from time to time in some cases)

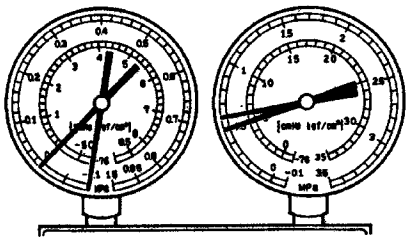

Symptom seen in refrigeration system	Probable cause	Diagnosis	Remedy
• Vacuum indicated on low pressure side, very low pressure indicated on high pressure side • Frost or dew seen on piping before and after receiver/drier or expansion valve	• Refrigerant flow obstructed by moisture or dirt in refrigeration system • Refrigerant flow obstructed by gas leakage from expansion valve heat sensing tube	• Refrigerant does not circulate	(1) Check heat sensing tube, expansion valve and EPR (2) Clean out dirt in expansion valve by blowing with air If not able to remove dirt, replace expansion valve (3) Replace receiver (4) Evacuate air and charge new refrigerant to proper amount. For gas leakage from heat sensing tube, replace expansion valve.

6. REFRIGERANT OVERCHARGE OR INSUFFICIENT COOLING OF CONDENSER

Condition: Insufficient Cooling

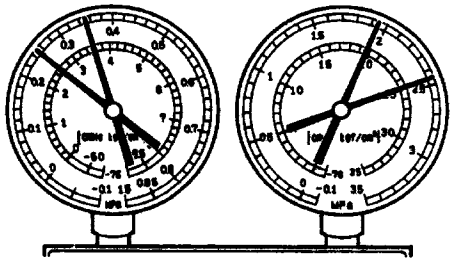

Symptom seen in refrigeration system	Probable cause	Diagnosis	Remedy
• Pressure too high on both low and high pressure sides • No air bubbles seen through the sight glass even when the engine rpm is lowered.	• Unable to develop sufficient performance due to excessive refrigerant in system • Insufficient cooling of condenser	• Excessive refrigerant in cycle → refrigerant overcharged • Condenser cooling insufficient → condenser fins clogged or fan motor faulty	(1) Clean condenser (2) Check fan motor operation (3) If (1) and (2) are in normal state, check amount of refrigerant Charge proper amount of refrigerant

7. AIR PRESENT IN REFRIGERATION SYSTEM

Condition: Insufficient Cooling

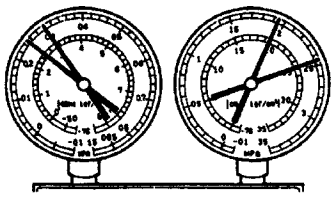

NOTE: These gauge indications are shown when the refrigeration system has been opened and the refrigerant charged without vacuum purging.

Symptom seen in refrigeration system	Probable cause	Diagnosis	Remedy
• Pressure too high on both low and high pressure sides • The low pressure piping is hot to the touch • Bubbles seen in sight glass	• Air–entered in refrigeration system	• Air present in refrigeration system • Insufficient vacuum purging	(1) Check compressor oil to see if dirty or insufficient (2) Evacuate air and charge new refrigerant

8. EXPANSION VALVE IMPROPERLY MOUNTED/HEAT SENSING TUBE DEFECTIVE (OPENS TOO WIDE)

Condition: Insufficient cooling

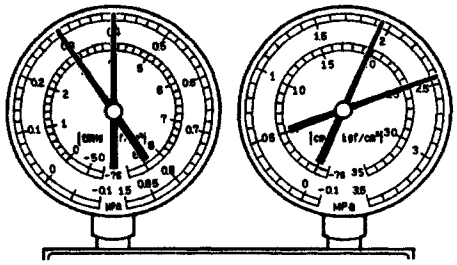

No41s2

Symptom seen in refrigeration system	Probable cause	Diagnosis	Remedy
• Pressure too high on both low and high pressure sides • Frost or large amount of dew on piping on low pressure side	• Trouble in expansion valve or heat sensing tube not installed correctly	• Excessive refrigerant in low pressure piping ↓ • Expansion valve opened too wide	(1) Check heat sensing tube installed condition (2) If (1) is normal, check expansion valve Replace if defective

9. DEFECTIVE COMPRESSION COMPRESSOR

Condition: Does not cool

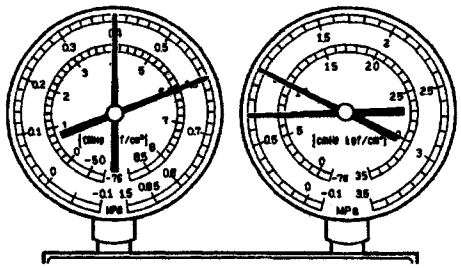

N04146

Symptom seen in refrigeration system	Probable cause	Diagnosis	Remedy
• Pressure too high on low pressure side • Pressure too low on high pressure side	• Internal leak in compressor	• Compression defective ↓ • Valve leaking or broken, sliding parts	• Repair or replace compressor

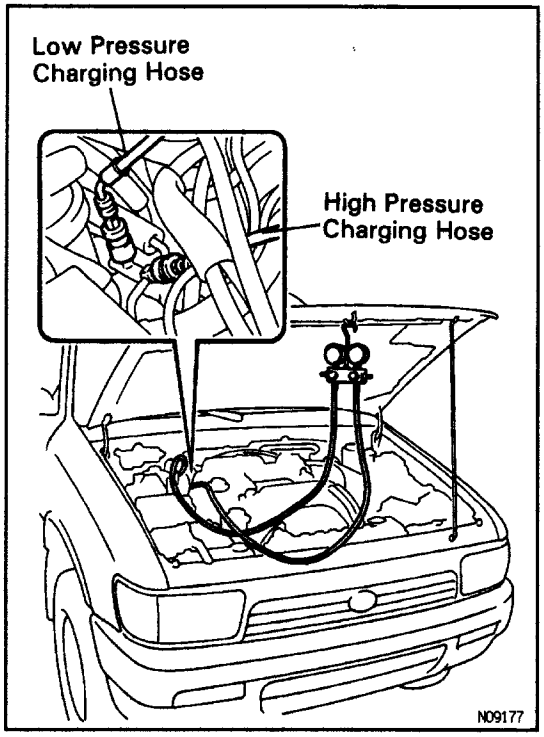

USE OF MANIFOLD GAUGE SET

MANIFOLD GAUGE SET INSTALLATION

1. CONNECT CHARGING HOSES TO MANIFOLD GAUGE SET

Tighten the nuts by hand.

CAUTION: Do not connect the wrong hoses.

2. CONNECT QUICK CONNECTORS TO CHARGING HOSES

Tighten the nuts by hand.

3. CLOSE BOTH HAND VALVES OF MANIFOLD GAUGE SET

4. REMOVE CAPS FROM SERVICE VALVES ON RE–FRIGERANT LINE

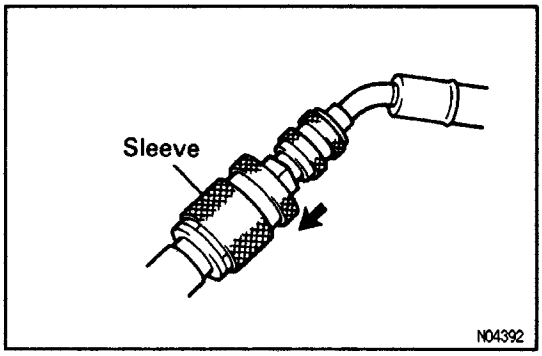

5. CONNECT QUICK CONNECTORS TO SERVICE VALVES

HINT: Push the quick connector onto the service valve, then slide the sleeve of the quick connector downward to lock it.

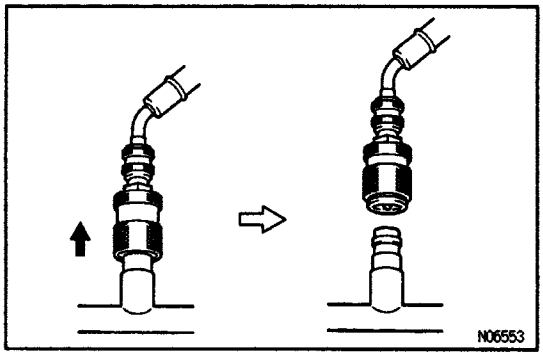

MANIFOLD GAUGE SET REMOVAL

1. CLOSE BOTH HAND VALVES OF MANIFOLD GAUGE SET

2. DISCONNECT QUICK CONNECTORS FROM SER–VICE VALVES ON REFRIGERANT LINE

HINT: Slide the sleeve of the quick connector upward to unlock the connector and remove it from the service valve.

3. INSTALL CAPS TO SERVICE VALVES ON REFRIG–ERANT LINE

VACUUM SWITCHING VALVE (VSV)

VSV INSPECTION

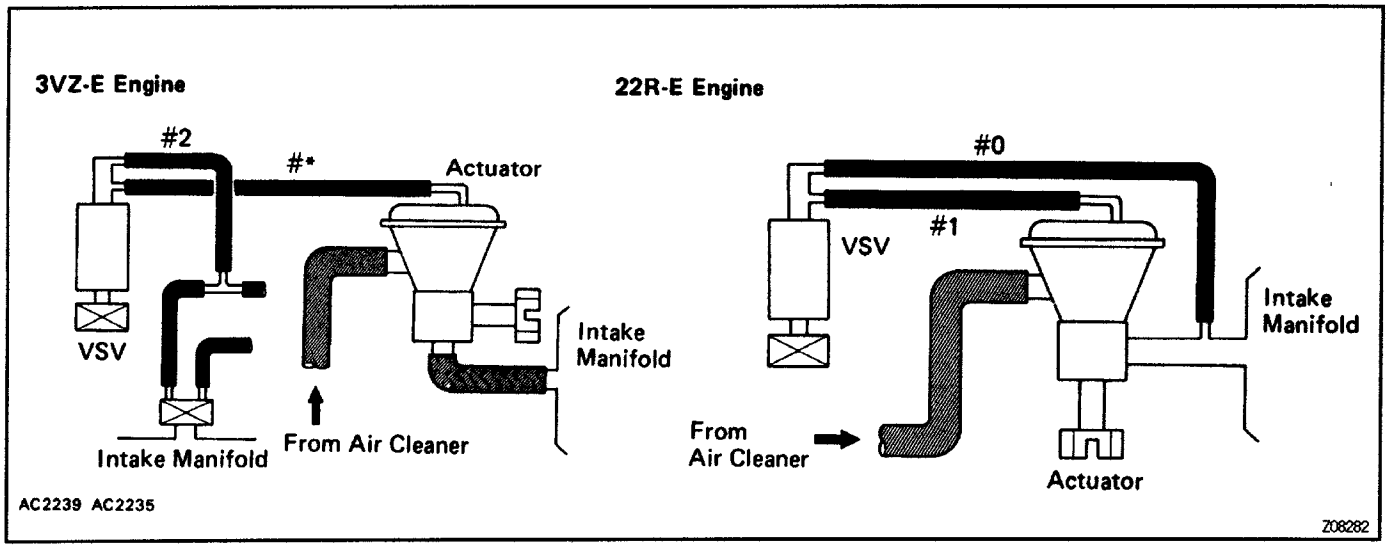

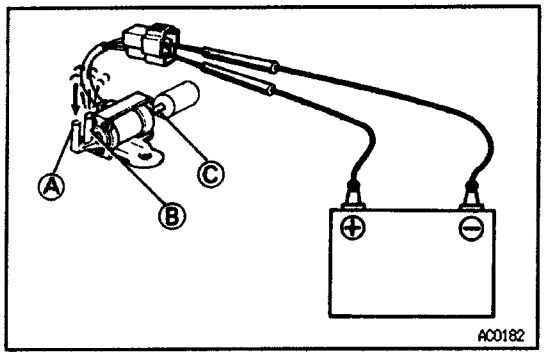

1. DISCONNECT VACUUM HOSES AND CONNECTOR FROM VSV

2. CHECK VACUUM CIRCUIT CONTINUITY IN VSV BY BLOWING AIR INTO PIPES

(a) Connect the VSV terminals to the battery terminals, as shown illustrated.

(b) Blow into pipe "A" and check that air comes out of pipe "B", but does not come out of filter "C".

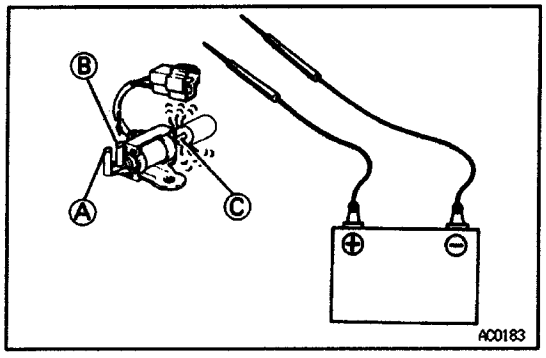

(c) Disconnect the battery.

(d) Blow into pipe "B" and check that air comes out of filter "C", but does not come out of pipe "A".

If a problem is found, replace the VSV.

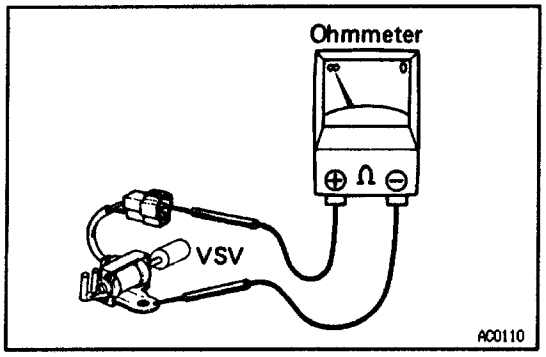

3. CHECK FOR SHORT CIRCUIT

Using an ohmmeter, check that there is no continuity between each terminals and the VSV body.

If a short circuit is found, repair of replace the VSV.

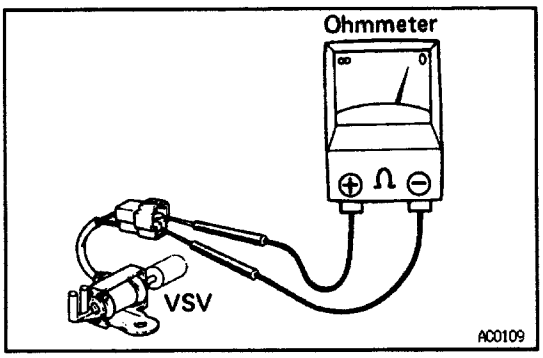

4. CHECK FOR OPEN CIRCUIT

Using an ohmmeter, measure the resistance between the 2 terminals of the VSV.

Resistance:

37 – 42 Ω at 20˚C (68˚ F)

If resistance value is not as specified, replace the VSV.

ASSEMBLY REMOVAL AND INSTALLATION

Remove and install the parts, as shown below.

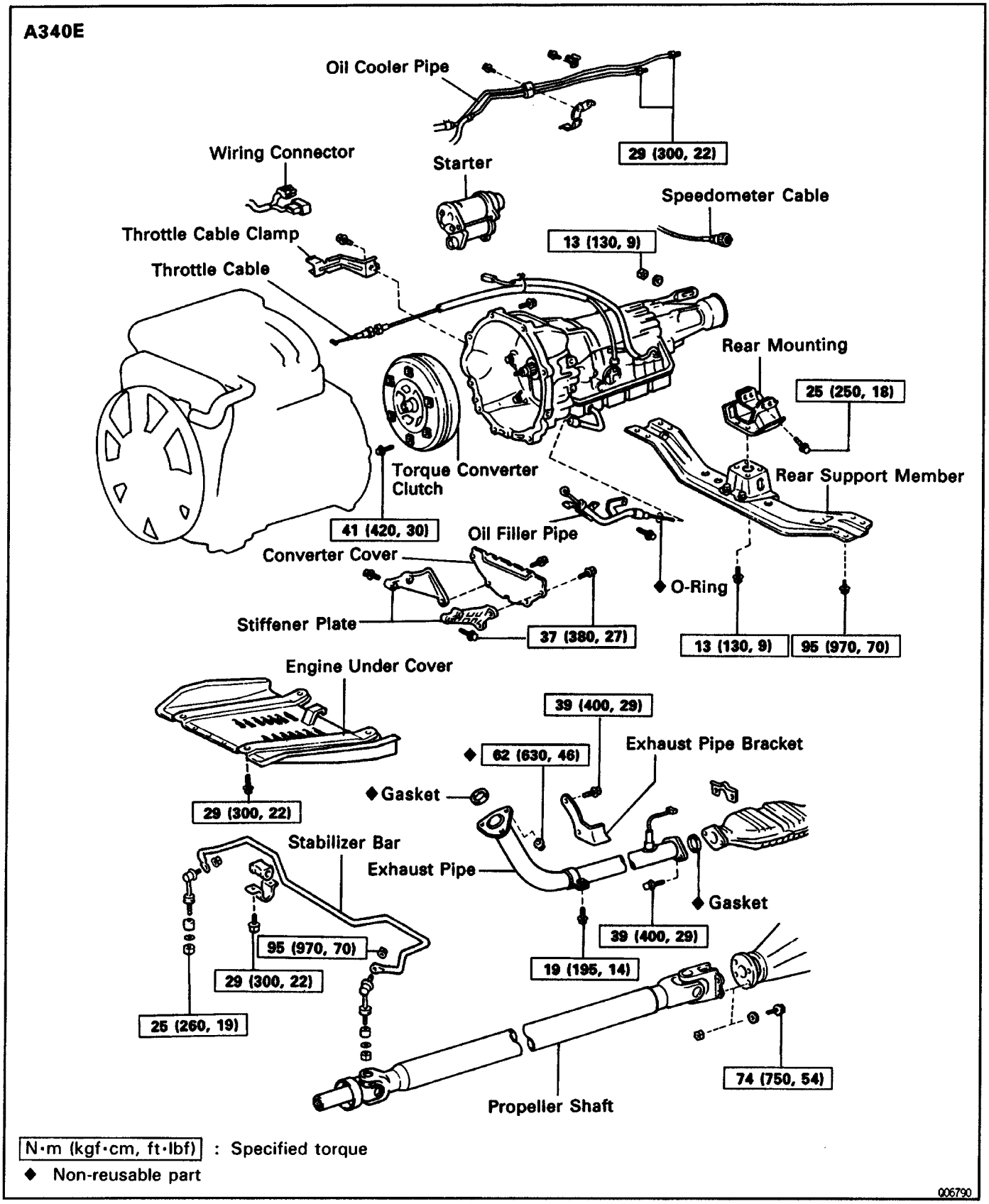

A340F

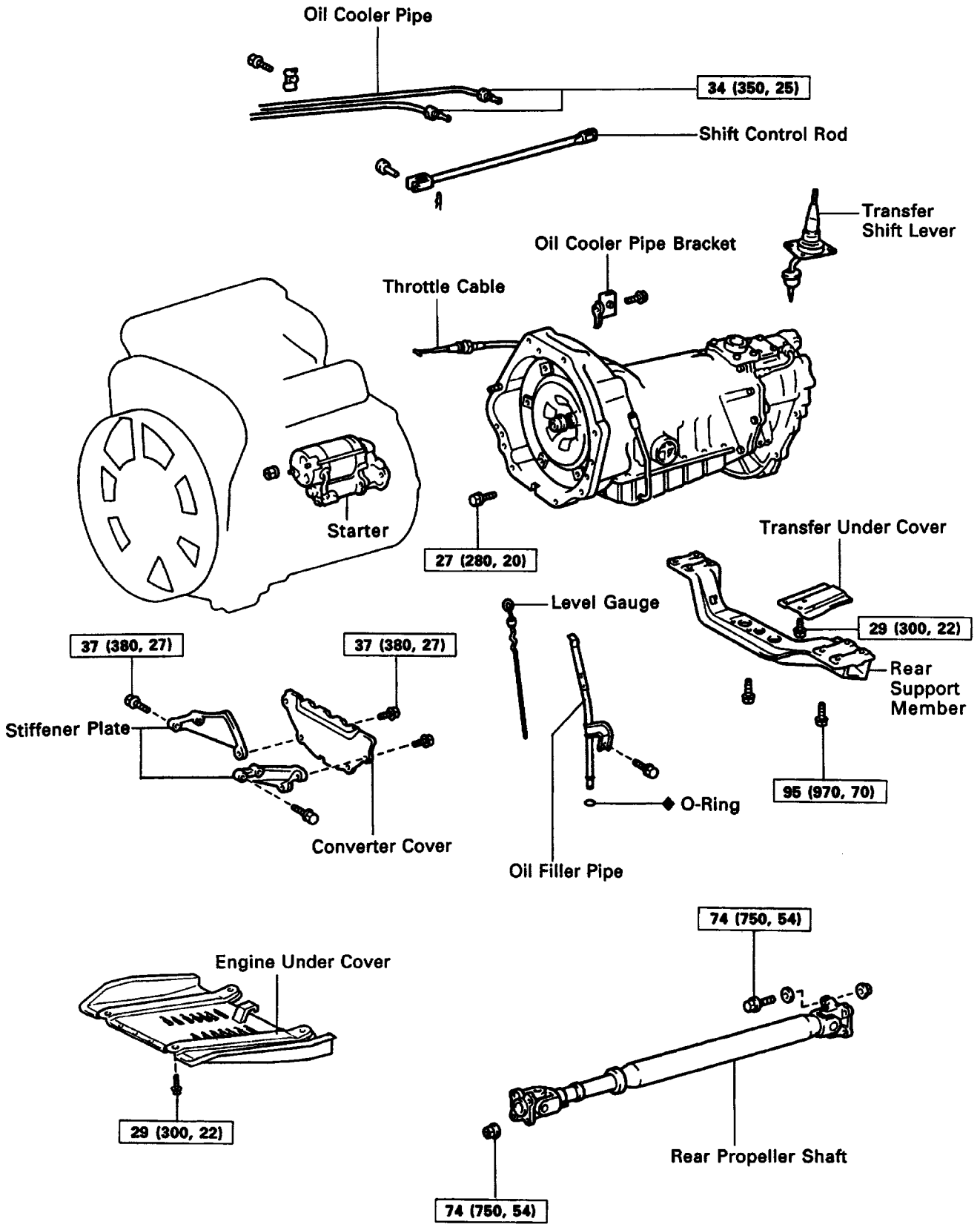

N·m (kgf·cm, ft·lbf) : Specified torque
◆ Non-reusable part

006791

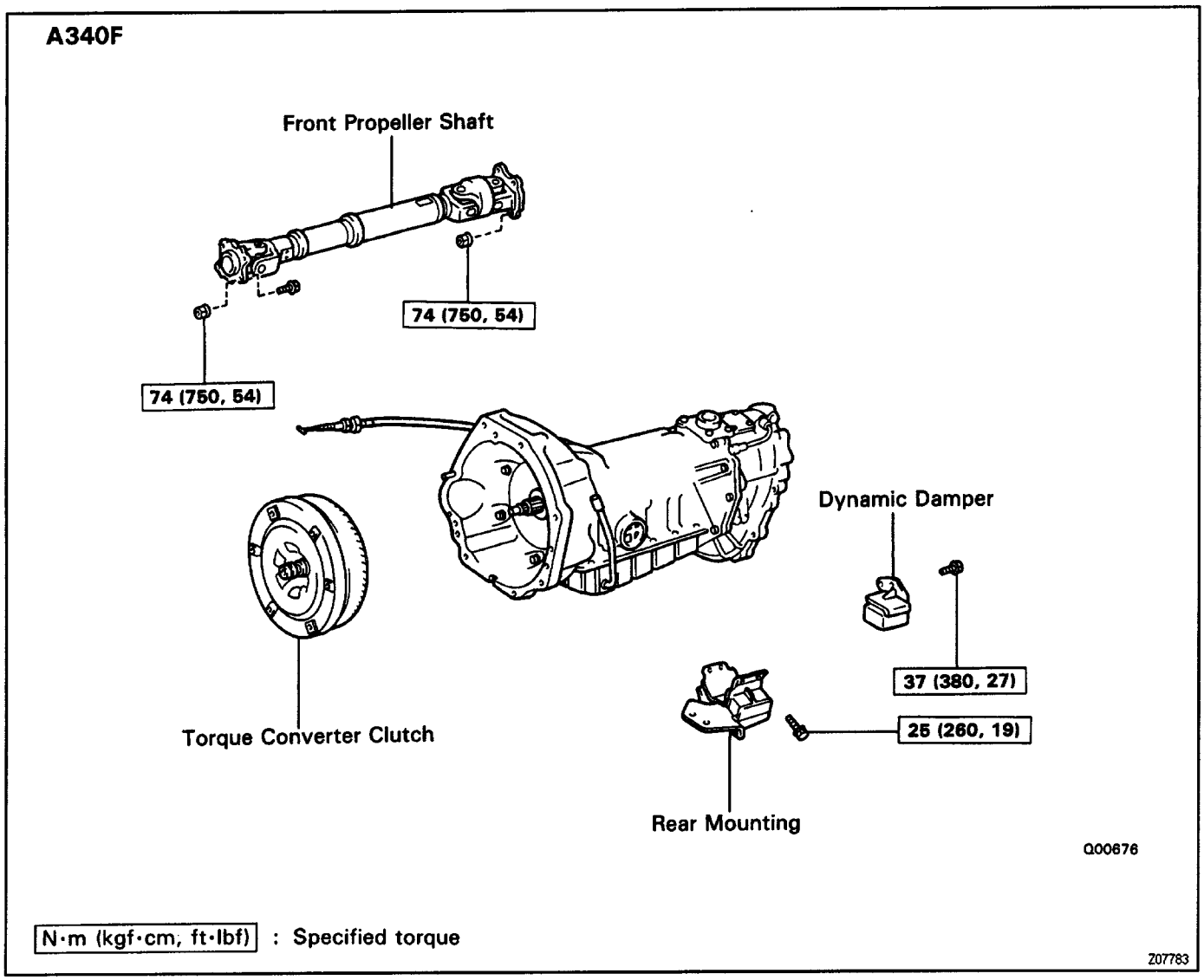

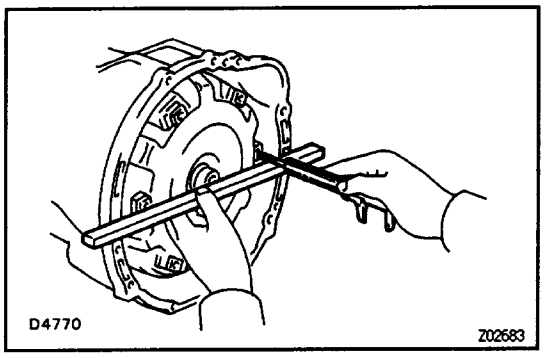

MAIN POINTS OF INSTALLATION

1. CHECK TORQUE CONVERTER CLUTCH INSTALLATION

Using calipers and a straight edge, measure from the installed surface of the torque converter clutch to the front surface of the transmission housing.

Correct distance:

20.0 mm (0.787 in.)

If the distance is less than the standard, check for improper installation.

2. ADJUST TRANSMISSION THROTTLE CABLE

3. FILL TRANSMISSION WITH ATF AND CHECK FLUID LEVEL

Fluid type:

ATF DEXRON® II

NOTICE: Do not overfill.

TORQUE CONVERTER CLUTCH CLEANING

If the transmission is contaminated, the torque converter clutch and transmission cooler should be thoroughly flushed with ATF.

TORQUE CONVERTER CLUTCH AND DRIVE PLATE INSPECTION

1. INSPECT ONE–WAY CLUTCH

(a) Install SST in the inner race of one–way clutch.
SST 09350–30020 (09351–32010)

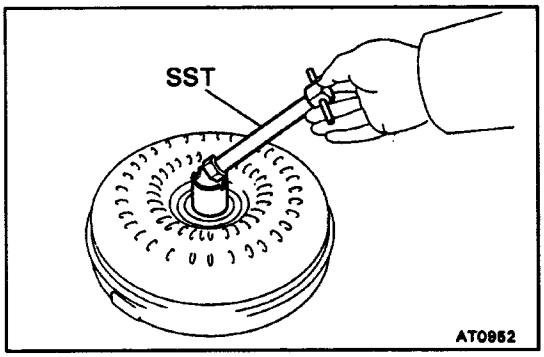

(b) Install SST so that it fits in the notch of the converter hub and outer race of the one–way clutch.
SST 09350–30020 (09351–32020)

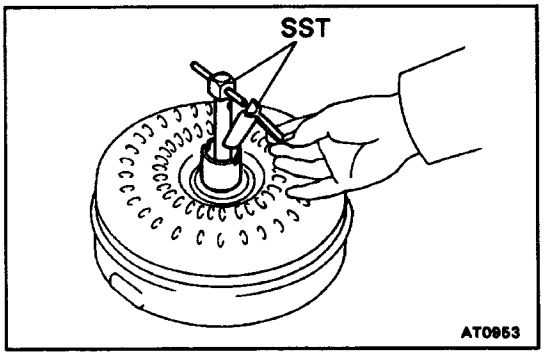

(c) With the torque converter clutch held upright, the clutch should lock when turned counterclockwise, and rotate freely and smoothly clockwise.
If necessary, clean the converter and retest the clutch. Replace the converter if the clutch still fails the test.

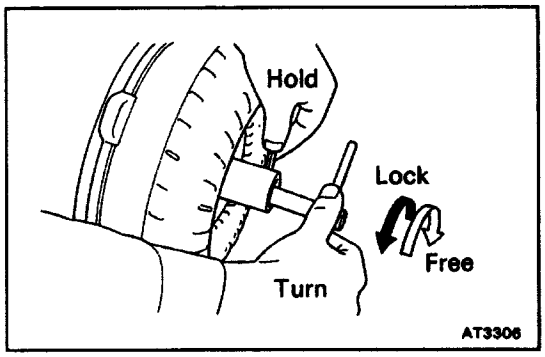

2. MEASURE DRIVE PLATE RUNOUT AND INSPECT RING GEAR

Set up a dial indicator and measure the drive plate runout.

Maximum runout:

0.20 mm (0.0079 in.)

If the runout is not within specification, or if the ring gear is damaged, replace the drive plate. If installing a new drive plate, note the orientation of spacers and tighten the bolts.

Torque: 83 N–m (850 kgf–cm, 61 ft–lbf)

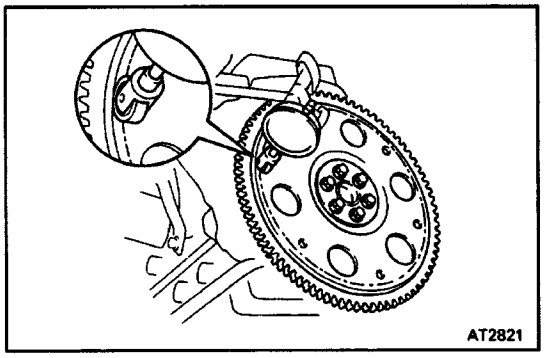

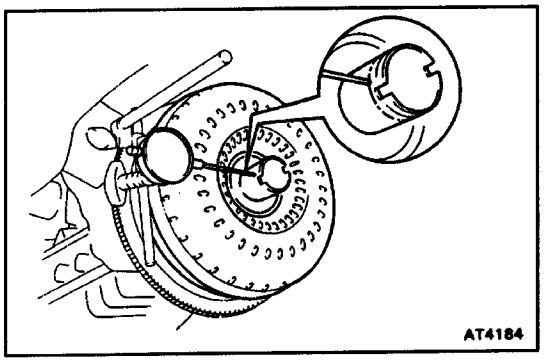

3. MEASURE TORQUE CONVERTER CLUTCH SLEEVE RUNOUT

(a) Temporarily mount the torque converter clutch to the drive plate. Set up a dial indicator.

Maximum runout:

0.30 mm (0.0118 in.)

If the runout is not within specification, try to correct by re-orienting the installation of the converter clutch.

If excessive runout cannot be corrected, replace the torque converter clutch.

HINT: Mark the position of the converter clutch to ensure correct installation.

(b) Remove the torque converter clutch.

A340E, A340F
AUTOMATIC TRANSMISSION

DESCRIPTION

PRECAUTIONS

When working with FIPG material, you must be observe the following.

- **Using a razor blade and gasket scraper, remove all the old FIPG material from the gasket surfaces.**
- **Thoroughly clean all components to remove all the loose material.**
- **Clean both sealing surfaces with a non –residue solvent.**
- **Apply the FIPG in an approx.1 mm (0.04 in.) wide bead along the sealing surface.**
- **Parts must be assembled within 10 minutes of application. Otherwise, the FIPG material must be removed and reapplied.**

If the vehicle is equipped with a mobile communication system, refer to the precaution in the IN section.

GENERAL DESCRIPTION

The A340E is a 4–speed, Electronically Controlled Transmission developed for use with highperformance engines such as the 3VZ–E. A lock–up mechanism is built into the torque converter clutch.
The A340F automatic transmission is a 4–speed automatic transmission with mechanically controlled 4WD transfer, developed with the aim of producing an easy–driving 4WD vehicle.
The transmission section has fundamentally the same construction as the A340E automatic transmission mounted in the TRUCK.
The operation of these automatic transmission is fully controlled by the ECM.
The A340E and A340F automatic transmissions are mainly composed of the torque converter clutch, the overdrive (hereafter called O/D) planetary gear unit, 3–speed planetary gear unit, the hydraulic control system and the electronic control system.

Sectional View

A340E

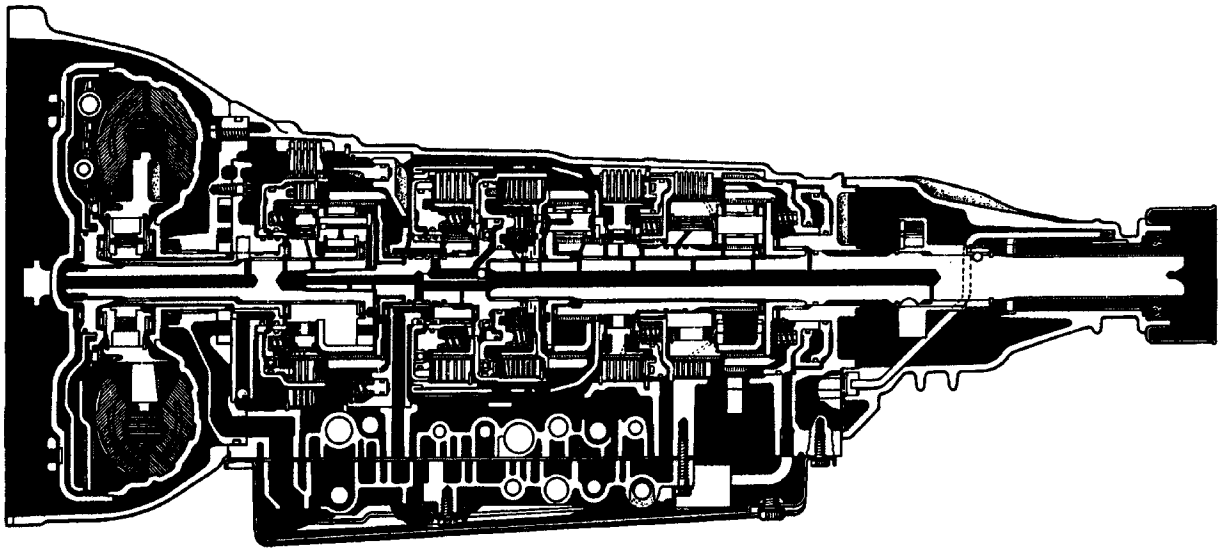

A340F

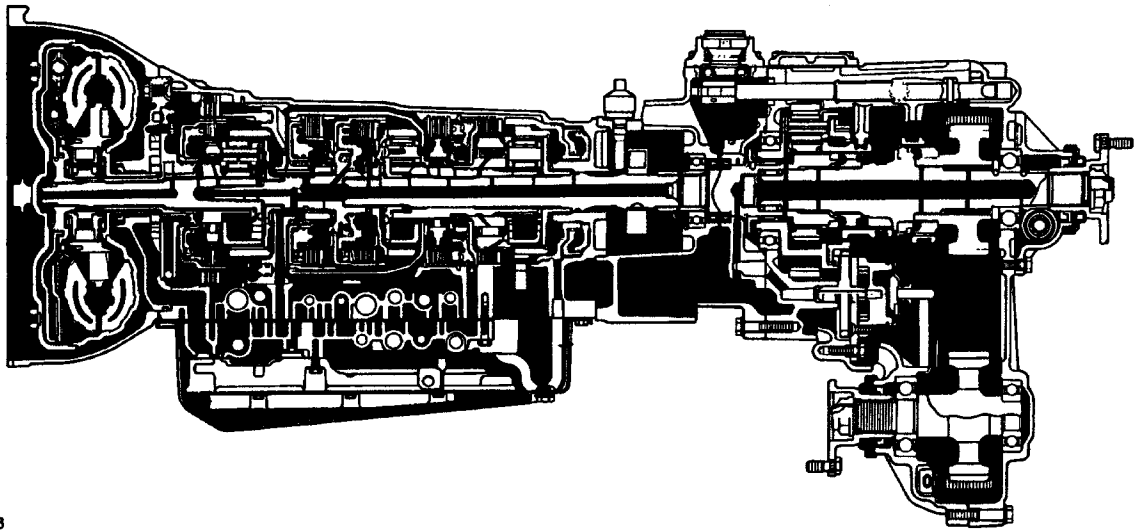

AT4366
AT5744

Z04672

Type of Transmission	A340E	A340F
Type of Engine	3vz – e	22R–E
Torque Converter Clutch		
Stall Torque Ratio	2.1 : 1	2.3 : 1
Lock–Up Mechanism	Equipped	←
Gear Ratio		
1st Gear	2.804	←
2nd Gear	1.531	←
3rd Gear	1.000	←
O/D Gear	0.705	←
Reverse Gear	2.393	←
PIates(Disc/Plate)		
O/D Direct Clutch (C_0)	2 / 2	1 / 1
Forward Clutch (C_1)	5 / 5	4 / 4
Direct Clutch (C_2)	4 / 4	3 / 3
2nd Brake (B_2)	5 / 5	4 / 4
1 st & Reverse Brake (B_3)	6 / 6	5 / 5
O/D Brake (B_0)	4 / 3	3 / 2
Second Coast Brake Band Width		
mm (in.)	40 (1.57)	←
ATF Type	ATF DEXRON® II	←
Capacity liter (US qts, Imp. qts)		
Dry Fill	7.2 (7.6, 6.3)	7.6 (8.0, 6.7)
Drain and Refill	1.6 (1.7, 1.4)	2.0 (2.1, 1.8)

EXTENSION HOUSING (A340E)

OIL SEAL REPLACEMENT

1. RAISE VEHICLE, AND POSITION PAN TO CATCH ANY FLUID THAT MAY DRIP

2. REMOVE PROPELLER SHAFT

(See page PR–7)

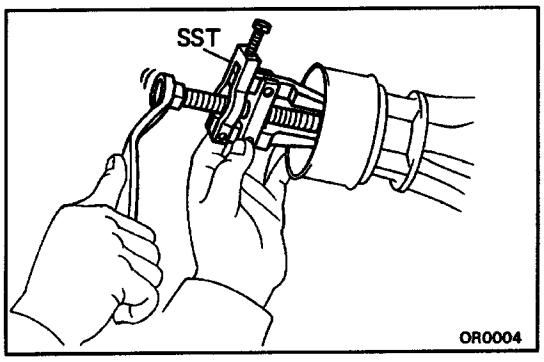

3. REMOVE REAR OIL SEAL

NOTICE: Clean the rear extension housing before removing the seal.

Using SST, remove the oil seal.

SST 09308 – 10010

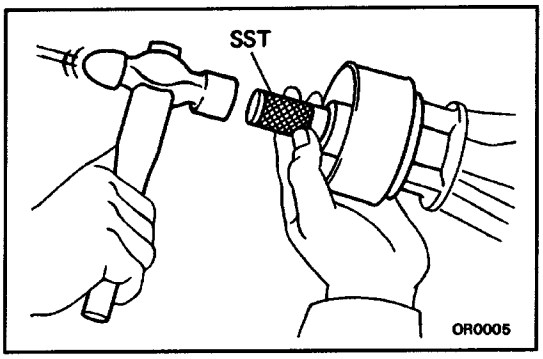

4. INSTALL NEW OIL SEAL

Using SST, drive in a new oil seal as far as it will go.

SST 09325 – 20010

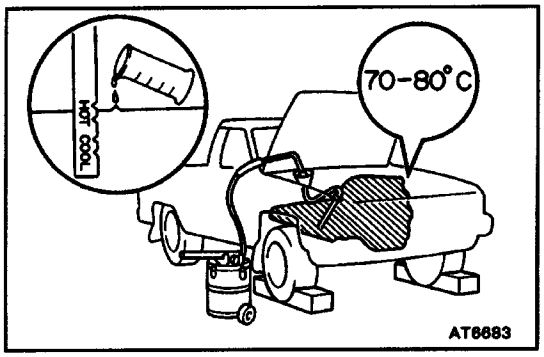

5. INSTALL PROPELLER SHAFT

(See page PR–16)

6. LOWER VEHICLE AND CHECK FLUID LEVEL

Start the engine, shift the shift lever into each position and, then check the fluid level with the transmission in P position.

Add fluid as necessary.

NOTICE: Do not overfill.

Fluid type:

ATF DEXRON® II

EXTENSION HOUSING REMOVAL

1. RAISE VEHICLE AND POSITION PAN TO CATCH ANY FLUID THAT MAY DROP

2. REMOVE PROPELLER SHAFT

(See page PR–7)

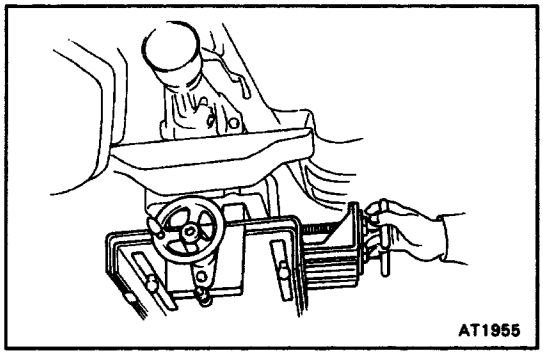

3. JACK UP TRANSMISSION SLIGHTLY

Securely support the transmission on a transmission jack.

Lift the transmission slightly to remove weight from the rear support member.

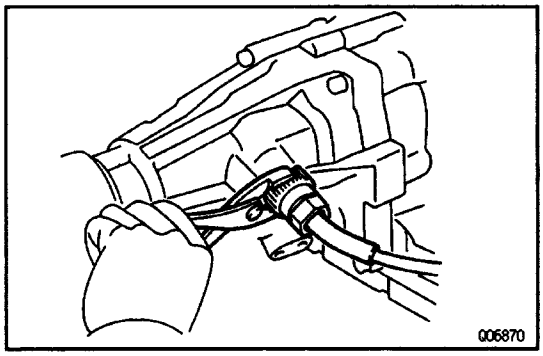

4. DISCONNECT SPEEDOMETER CABLE AND REMOVE THE SPEEDOMETER DRIVEN GEAR

(a) Loosen the serrated collar with pliers. Do not lose the felt dust protector and washer.

(b) Disconnect the speedometer cable.

(c) Remove the bolt and locking plate. Pry out the speedometer driven gear.

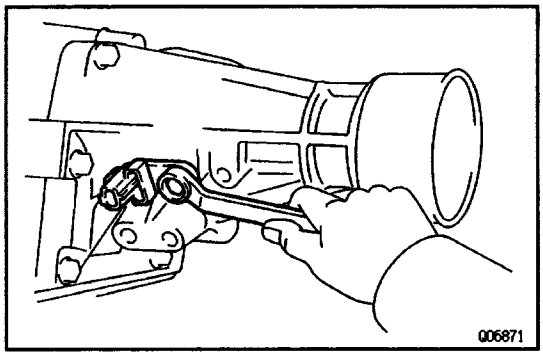

5. REMOVE NO.2 VEHICLE SPEED SENSOR

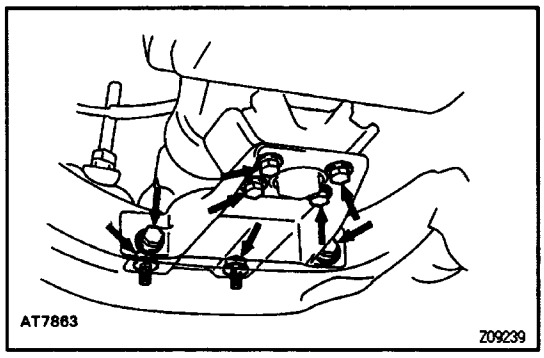

6. REMOVE ENGINE REAR MOUNTING FROM REAR SUPPORT MEMBER

Remove the 8 bolts from the bracket.

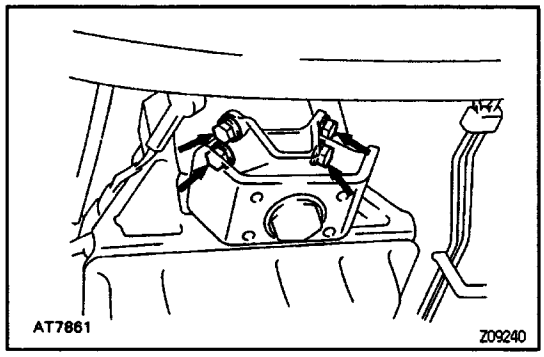

7. REMOVE ENGINE REAR MOUNTING FROM EXTENSION HOUSING

Remove the 4 bolts and the engine rear mounting from the extension housing.

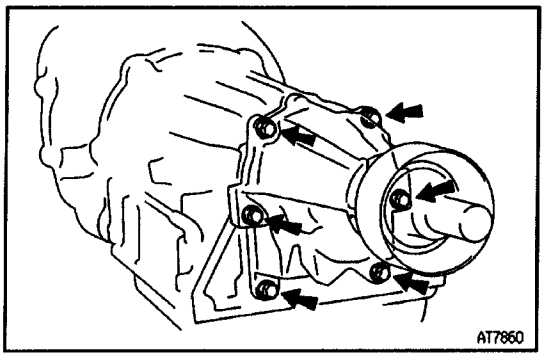

8. REMOVE EXTENSION HOUSING AND GASKET

Remove the 6 bolts. If necessary, tap the extension housing with a plastic hammer or wooden block to loosen it.

EXTENSION HOUSING INSTALLATION

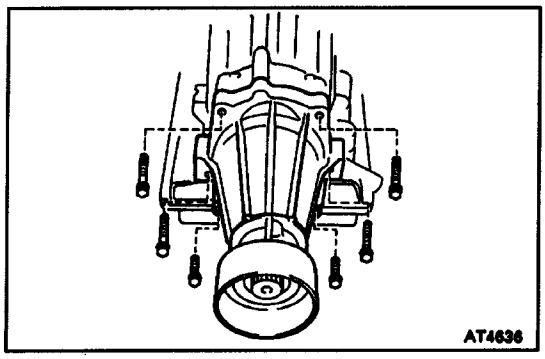

1. INSTALL NEW GASKET AND EXTENSION HOUSING ON TRANSMISSION

(a) Clean the threads of the bolt and bolt hole.

(b) Coat the threads of the all bolts with sealant.

Sealant:

Part No. 08833–00080, THREE BOND 1344, LOC–TITE 242 or equivalent

(c) Install the extension housing over a new gasket with bolts, and then torque them.

HINT: The 2 lower bolts are shorter.

Torque: 34 N–m (345 kgf–cm, 25 ft–lbf)

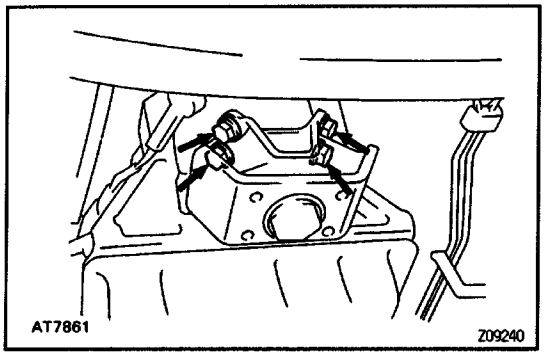

2. INSTALL ENGINE REAR MOUNTING

(a) Install the engine rear mounting to the extension housing. Tighten the 4 bolts.

Torque: 25 N–m (260 kgf–cm, 19 ft–lbf)

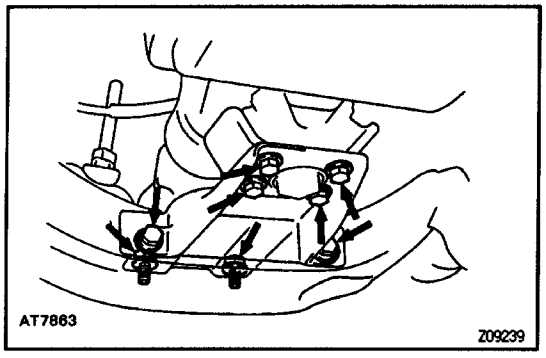

(b) Connect the bracket to the rear mounting and tighten the 8 bolts.

Torque: 13 N–m (130 kgf–cm, 9 ft–lbf)

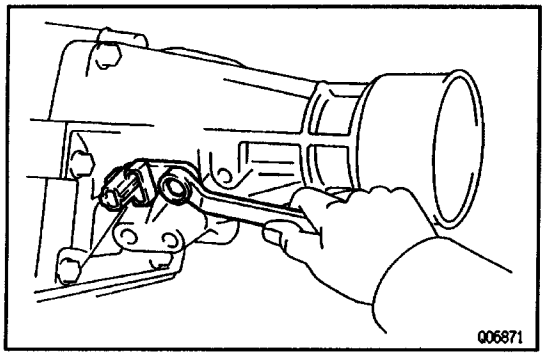

3. INSTALL PROPELLER SHAFT

(See page PR–16)

4. INSTALL NO.2 VEHICLE SPEED SENSOR

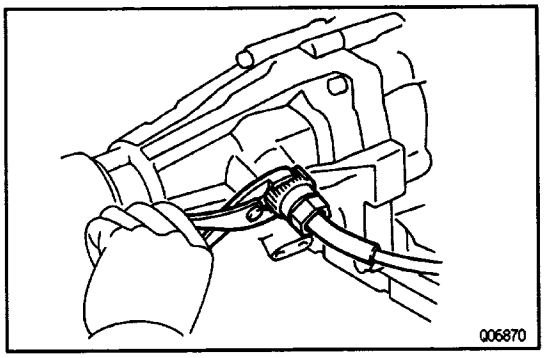

5. INSTALL SPEEDOMETER DRIVEN GEAR AND CONNECT SPEEDOMETER CABLE

(a) Install the speedometer driven gear.
(b) Install the locking plate with the bolt.
(c) Connect the speedometer cable.
(d) Tighten the serrated collar with pliers.

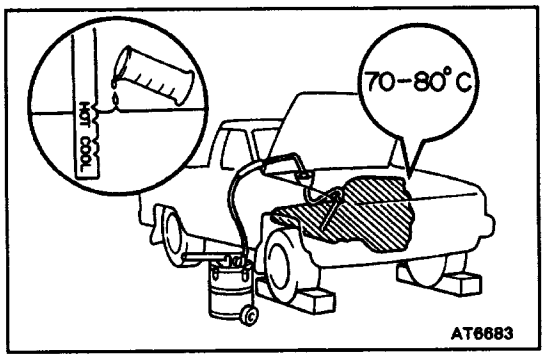

6. LOWER VEHICLE AND CHECK FLUID LEVEL

Start the engine, shift the shift lever into each position, and then check the fluid level with the transmission in P position.

Add fluid as necessary.

Fluid type:

ATF DEXRON® II

OPERATION

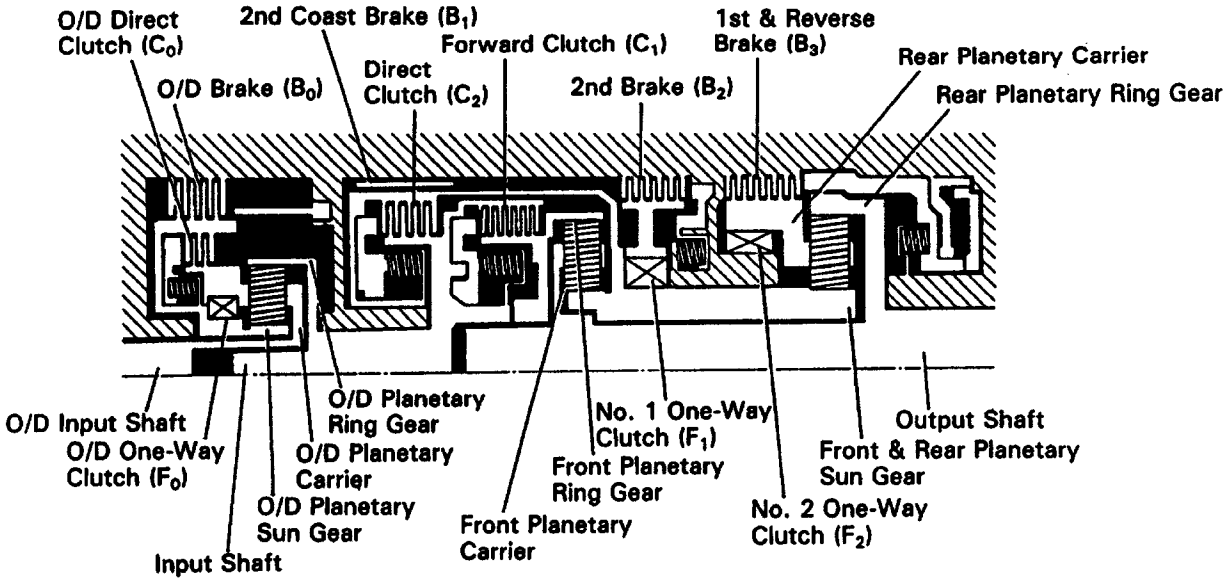

○ ..... Operating

Shift lever position	Gear position	C_0	C_1	C_2	B_0	B_1	B_2	B_3	F_0	F_1	F_2
P	Parking	○									
R	Reverse	○		○				○	○		
N	Neutral	○									
D	1st	○	○						○		○
	2nd	○	○				○		○	○	
	3rd	○	○	○			○		○		
	O/D		○	○	○		○				
2	1st	○	○						○		○
	2nd	○	○			○	○		○	○	
	3rd	○	○	○			○		○		
L	1st	○	○					○	○		○
	* 2nd	○	○			○	○		○	○	

* Down–shift only in the L position and 2nd gear no up–shift

1. FUNCTION OF COMPONENTS

Component	Function
O/D Direct Clutch (C_0)	Connects overdrive sun gear and overdrive carrier
O/D Brake (B_0)	Prevents overdrive sun gear from turning either clockwise or counterclockwise
O/D One–Way Clutch (F_0)	When transmission is being driven by engine, connects overdrive sun gear and overdrive carrier
Forward Clutch (C_1)	Connects input shaft and front planetary ring gear
Direct Clutch (C_2)	Connects input shaft and front & rear planetary sun gear
2nd Coast Brake (B_1)	Prevents front & rear planetary sun gear from turning either clockwise or counterclockwise
2nd Brake (B_2)	Prevents outer race of F_1 from turning either clockwise or counterclockwise, thus preventing front & rear planetary sun gear from turning counterclockwise
1st & Reverse Brake (B_3)	Prevents rear planetary carrier from turning either clockwise or counterclockwise
No.1 One–Way Clutch (F_1)	When B_2 is operating, prevents front & rear planetary sun gear from turning counterclockwise
No.2 One–Way Clutch (F_2)	Prevents rear planetary carrier from turning counterclockwise

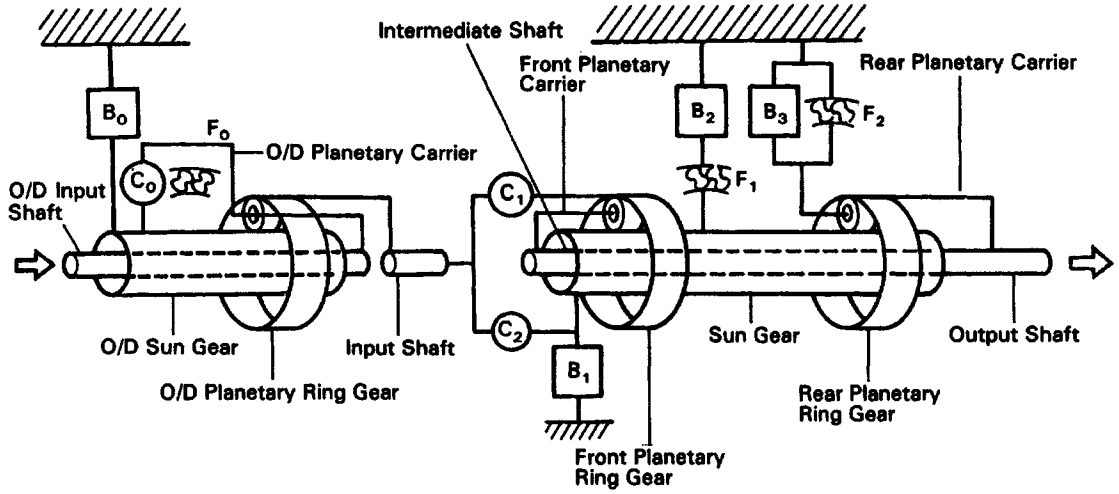

D or 2 Position 1st Gear

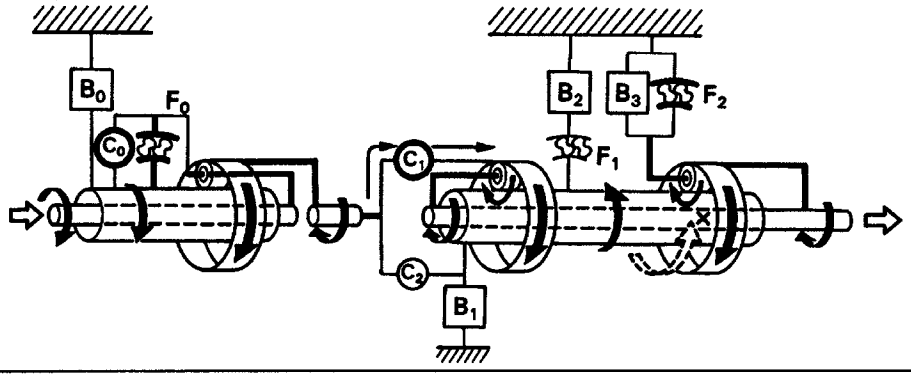

AT6675

D Position 2nd Gear

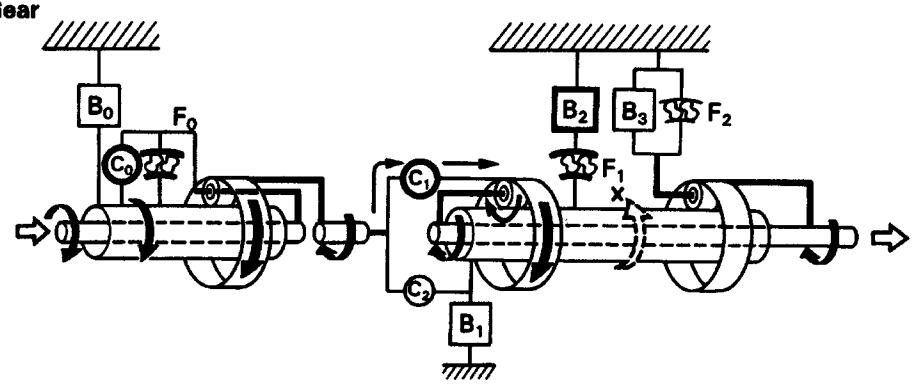

AT6676

D or 2 Position 3rd Gear

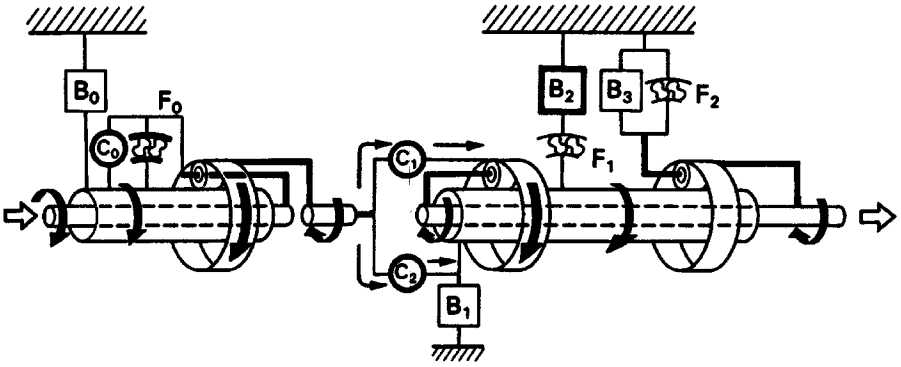

AT6677

D Position O/D

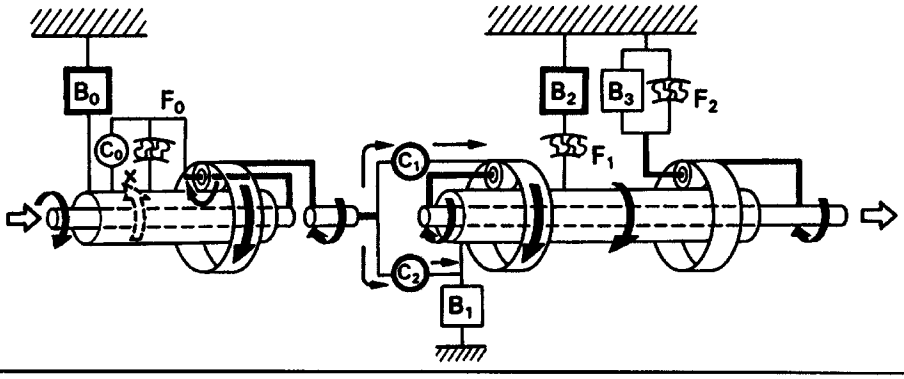

AT6678

2 or L Position 2nd Gear

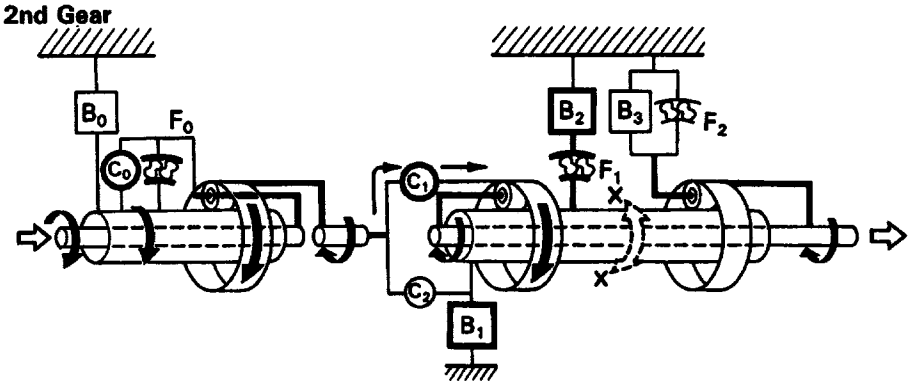

AT6679

L Position 1st Gear

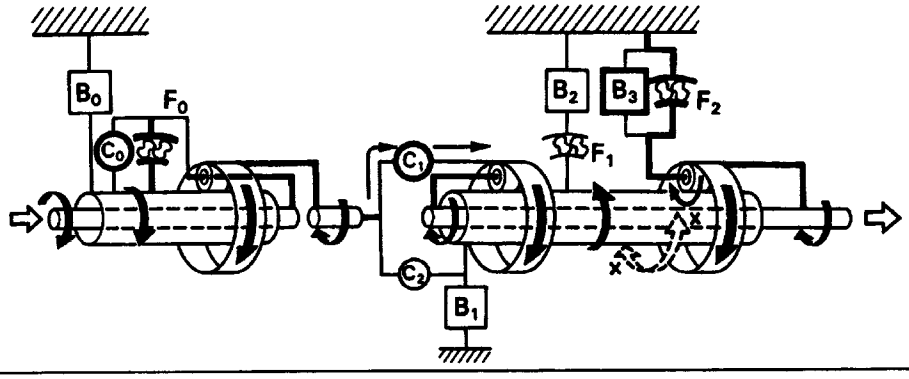

AT6680

R Position Reverse Gear

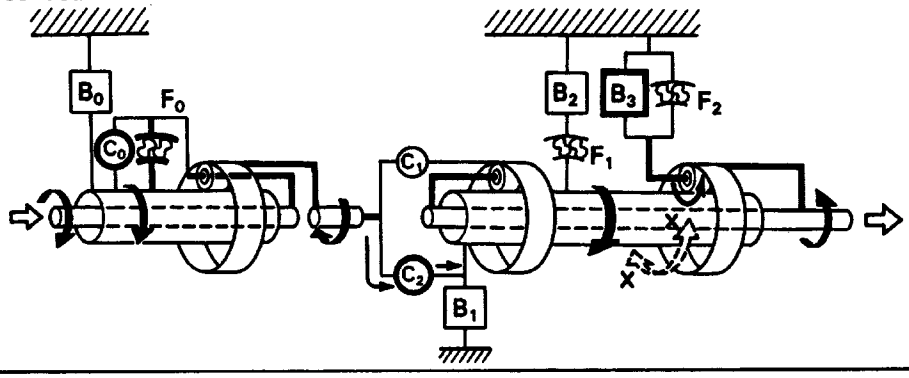

AT6681

2. HYDRAULIC CONTROL SYSTEM

The hydraulic control system is composed of the oil pump, the valve body, the solenoid valves, and the clutches and brakes, as well as the fluid passages which connect all of these components.
Based on the hydraulic pressure created by the oil pump, the hydraulic control system governs the hydraulic pressure acting on the torque converter clutch, clutches and brakes in accordance with the vehicle driving conditions.
There are 3 solenoid valves on the valve body. These solenoid valves are turned on and off by signals from the ECM to operate the shift valves. These shift valves then switch the fluid passages so that fluid goes to the torque converter clutch and planetary gear units.
Except for the solenoid valves, the hydraulic control system of the electronically controlled transmission is basically the same as that of the fully hydraulic controlled automatic transmission.

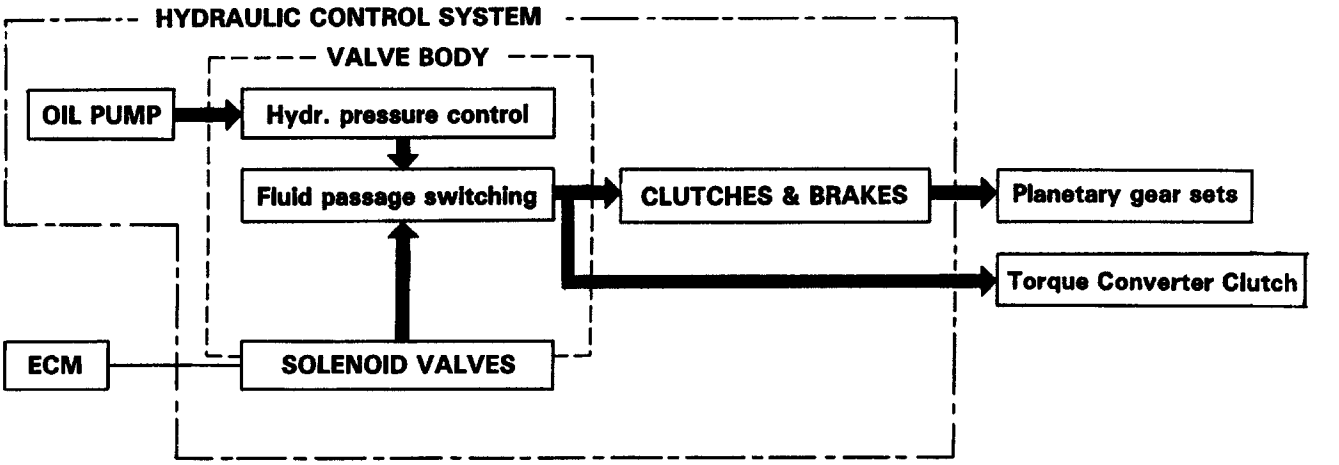

V01537

- **LINE PRESSURE**

Line pressure is the most basic and important pressure used in the automatic transmission, because it is used to operate all of the clutches and brakes in the transmission.
If the primary regulator valve does not operate correctly, line pressure will be either too high or too low. Line pressure that is too high will lead to shifting shock and consequent engine power loss due to the greater output required from the oil pump; line pressure that is too low will cause slippage of clutches and brakes, which will, in extreme cases, prevent the vehicle from moving.
Therefore, if either of these problems are noted, the line pressure should be measured to see if it is within specification.

- **THROTTLE PRESSURE**

Throttle pressure is always kept in accordance with the opening angle of the engine throttle valve. This throttle pressure acts on the primary regulator valve and, the line pressure is regulated according to the throttle valve opening.
In the fully hydraulically controlled automatic transmission, throttle pressure is used for regulating line pressure and as signal pressure for up–shift and down–shift of the transmission. In the electronically controlled transmission, however, throttle pressure is used only for regulating line pressure. Consequently, improper adjustment of the transmission throttle cable may result in a line pressure that is too high or too low. This, in turn, will lead to shifting shock or clutch and brake slippage.

3. ELECTRONIC CONTROL SYSTEM

The electronic control system, which controls the shift points and the operation of the lock–up clutch, is composed of the following three parts:

1. Sensors

These sensors respond to the vehicle speed, throttle opening and other conditions and transmit these data to the ECM in the form of electrical signals.

2. ECM

The ECM determines the shift and lock–up timing based upon the signals from sensors, and controls the solenoid valves of the hydraulic control unit accordingly.

3. Actuators

These are three solenoid valves that control hydraulic pressure acting on the hydraulic valves to control shifting and lock–up timing.

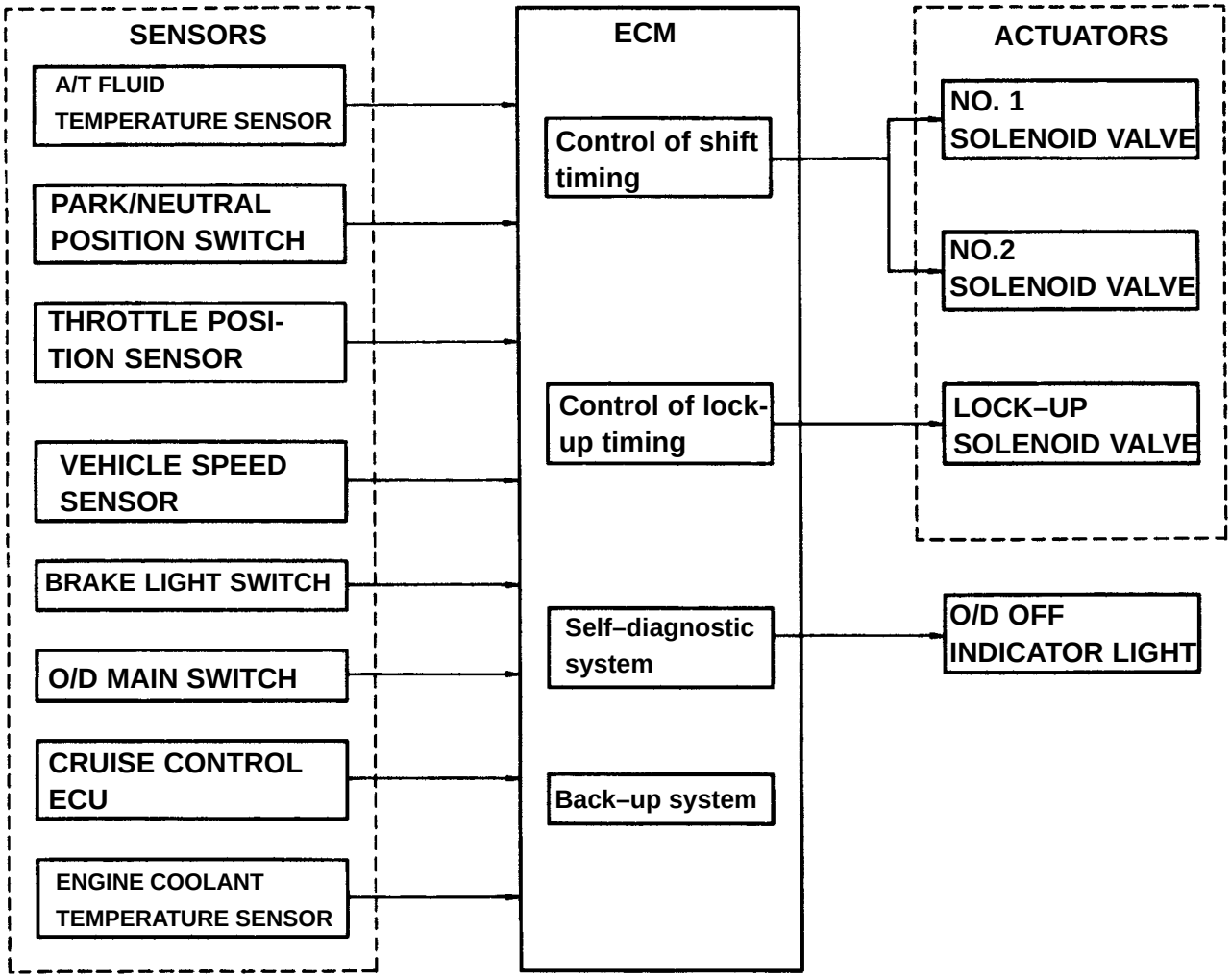

4. FUNCTION OF ECM

- **Control of Shifting Timing**

The ECM has programmed into its memory the optimum shift pattern for each shift lever position (D, 2, L position)(Normal and Power).
Based on the appropriate shift pattern, the ECM turns No. 1 and No.2 solenoid valves on or off in accordance with the vehicle speed signal from the vehicle speed sensor and the throttle opening signal from the throttle position sensor. In this manner, the ECM operates each shift valve, opening or closing the fluid passages to the clutches and brakes to permit up–shift or downshift of the transmission.
HINT: The electronic control system provides shift timing and lock–up control only while the vehicle is traveling forward. In REVERSE, PARK and NEUTRAL, the transmission is mechanically, not electronically controlled.

- **Control of Overdrive**

Driving in overdrive is possible if the 0/D main switch on and shift lever is in the D position.
However, when the vehicle is being driven using the cruise control system (CCS), if the actual vehicle speed drops to about 4 km/h (2 mph) below the set speed while the vehicle is running in overdrive, the CCS ECU sends a signal to the ECM to release the overdrive and prevent the transmission from shifting back into overdrive until the actual vehicle speed reaches the speed set in the CCS memory.
On this model, if the engine coolant temperature falls below 70˚C (158˚F), preventing the transmission from up–shifting into overdrive.

- **Control of Lock–Up System**

The ECM has programmed in its memory a lock–up clutch operation pattern for each driving mode (Normal and Power).
Based on this lock–up pattern, the ECM turns lock–up solenoid valve on or off in accordance with the vehicle speed signals received from the vehicle speed sensor and the throttle opening signals from the throttle position sensor.
Depending on whether lock–up solenoid valve is on or off, the lock–up relay valve performs changeover of the fluid passages for the converter pressure acting on the torque converter clutch to engage or disengage the lock–up clutch.
Mandatory Cancellation of Lock–Up System:
If any of the following conditions exist, the ECM turns off lock–up solenoid valve to disengage the lock–up clutch.
(1) The stop light switch comes on (during braking).
(2) The IDL points of the throttle position sensor close (throttle valve fully closed).
(3) The vehicle drops 4 km/h (2 mph) or more below the set speed while the cruise control system is operating.
(4) The engine coolant temperature falls below 70˚C (158˚ F).
The purpose of (1) and (2) above is to prevent the engine from stalling if the rear wheels lock up.
The purpose of (3) and (4) is both to improve general driveability, and to speed up transmission warm – up.
Also, while the lock–up system is in operation, the ECM will temporarily turn it off during upshift or down–shift in order to decrease shifting shock.

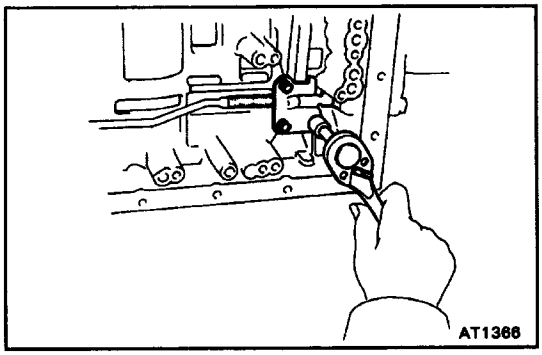

PARKING LOCK PAWL

PARKING LOCK PAWL REMOVAL

1. REMOVE VALVE BODY

(See page AT1–56)

2. REMOVE PARKING LOCK PAWL BRACKET

Remove the 3 bolts and the bracket.

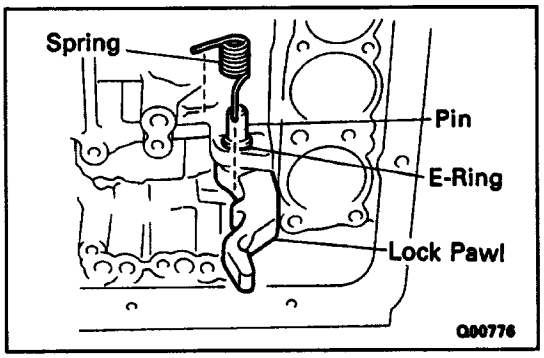

3. REMOVE SPRING FROM PARKING LOCK PAWL PIVOT PIN

4. REMOVE PIVOT PIN AND PARKING LOCK PAWL

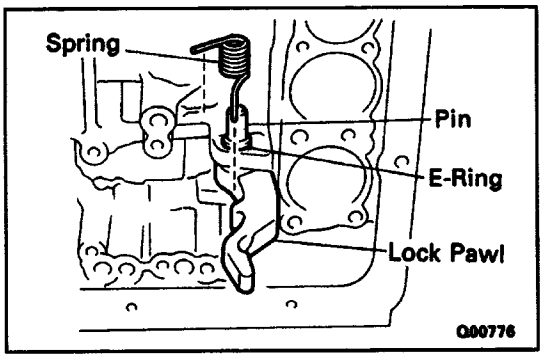

PARKING LOCK PAWL INSTALLATION

1. INSTALL PARKING LOCK PAWL AND PIVOT PIN

2. INSTALL SPRING

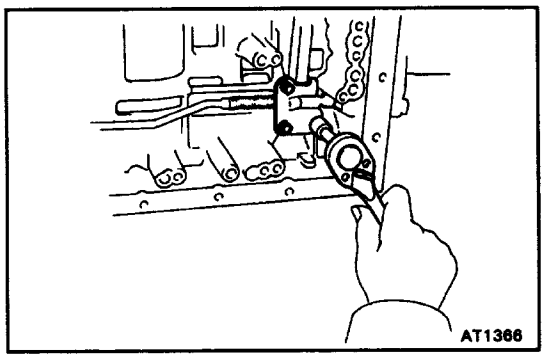

3. INSTALL PARKING LOCK PAWL BRACKET

(a) Push lock rod fully toward.

(b) Install 3 bolts finger tight.

(c) Check that the pawl operates smoothly.

(d) Torque the bolts.

Torque: 7.4 N–m (75 kgf–cm, 65 in–lbf)

4. INSTALL VALVE BODY

(See page AT1–58)

PREPARATION

SST (SPECIAL SERVICE TOOLS)

	09032–00100	Oil Pan Seal Cutter	
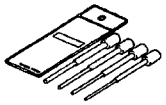	09201–10000	Valve Guide Bushing Remover & Replacer Set	Speedometer driven gear oil seal
	(09201–01080)	Valve Guide Bushing Remover & Replacer 8	
	09308–10010	Oil Seal Puller	
	09325–40010	Transmission Oil Plug	
	09350–30020	TOYOTA Automatic Transmission Tool Set	
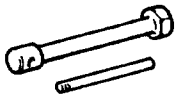	(09351–32010)	One–way Clutch Test Tool	
	(09351–32020)	Stator Stopper	
	09843–18020	Diagnosis Check Wire	
	09921–00010	Spring Tension Tool	Speedometer driven gear oil seal
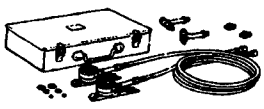	09992–00094	Automatic Transmission Oil Pressure Gauge Set	

RECOMMENDED TOOLS

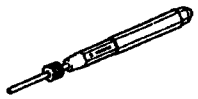	**09031–00030** Pin Punch.	
	**09905–00012** Snap Ring No.1 Expander.	

EQUIPMENT

Ohmmeter	
Voltmeter	
Torque wrench	
Dial indicator with magnetic base	Check drive plate runout.
Vernier calipers	Check torque converter clutch installation.
Straight edge	Check torque converter clutch installation.

LUBRICANT

Item	Capacity	Classification
A340E		
Dry fill	**7.2 liters (7.6 US qts, 6.3 Imp. qts)**	
Drain and refill	**1.6 liters (1.7 US qts, 1.4 Imp. qts)**	ATF DEXRON® II
A340F		
Dry fill	**7.6 liters (8.0 US qts, 6.7 Imp. qts)**	
Drain and refill	**2.0 liters (2.1 US qts, 1.8 Imp. qts)**	

SSM (SPECIAL SERVICE MATERIALS)

08826–00090	Seal Packing 1281, THREE BOND 1281 or equivalent (FIPG)	Oil pan
08833–00080	Adhesive 1344, THREE BOND 1344, LOCTITE 242 or equivalent	Extension housing

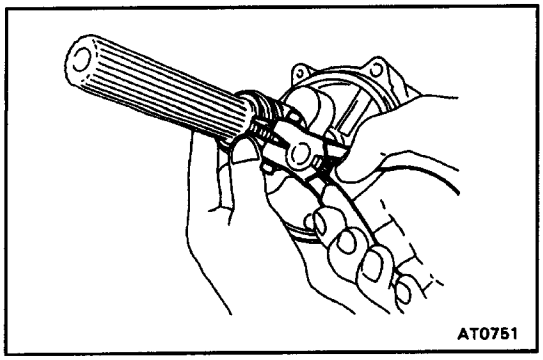

SENSOR ROTOR (A340E)

SENSOR ROTOR REMOVAL

1. REMOVE EXTENSION HOUSING
(See page AT1–66)

2. REMOVE SPEEDOMETER DRIVE GEAR

(a) Using snap ring pliers, remove the snap ring.
(b) Slide off the speedometer drive gear.
(c) Remove the lock ball.

3. REMOVE SENSOR ROTOR FROM OUTPUT SHAFT

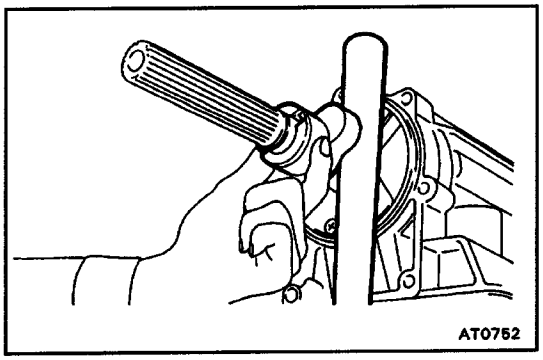

SENSOR ROTOR INSTALLATION

1. INSTALL SENSOR ROTOR ON OUTPUT SHAFT

(a) Make sure that the key is installed in the groove.
(b) Install the sensor rotor on the shaft.

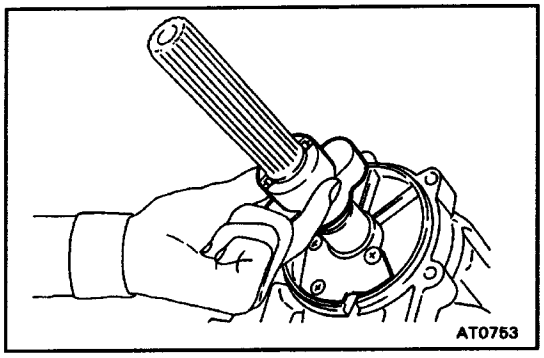

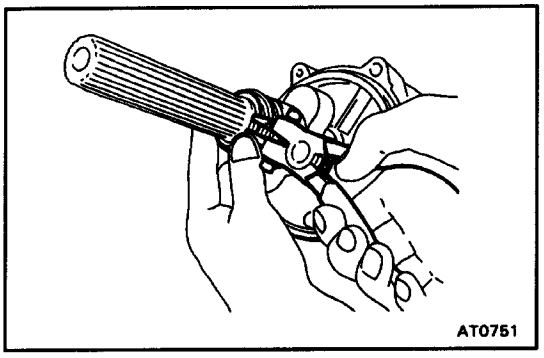

2. INSTALL SPEEDOMETER DRIVE GEAR

(a) Slide the lock ball and the speedometer drive gear on the output shaft.
(b) Using snap ring pliers, install the snap ring.

3. INSTALL EXTENSION HOUSING
(See page AT1–67)

SERVICE SPECIFICATIONS

SERVICE DATA

Line pressure (wheel locked)	**Engine idling**			
	D position	**363 – 422 kPa**	**3.7 – 4.3 kgf/cm²**	**53 – 61 psi**
	R position	**490 – 588 kPa**	**5.0 – 6.0 kgf/cm²**	**71 – 85 psi**
	AT stall (Throttle valve fully opened)			
	D position	**932 – 1,177 kPa**	**9.5 – 12.0 kgf/cm²**	**135 – 171 psi**
	R position	**1,294 – 1,638 kPa**	**13.2 – 16.7 kgf/cm²**	**188 – 238 psi**
Engine stall revolution (D and R position)	A340E	**2,450 ± 150 rpm**		
	A340F	**2,200 ± 150 rpm**		
Time lag	**N → D position**	**Less than 1.2 seconds**		
	N → R position	**Less than 1.5 seconds**		
Engine idling speed (A/C OFF)	**A340E (N position)**	**800 ± 50 rpm**		
	A340F (N position)	**750 ± 50 rpm**		
Throttle cable adjustment		**Between boot end face and inner cable stopper**		
Throttle valve fully opened		**0 – 1 mm**	**0 – 0.04 in.**	
Torque converter clutch installation distance		**20.0 mm**	**0.787 in.**	
Drive plate runout	Max	**0.20 mm**	**0.0079 in.**	
Torque converter clutch sleeve runout	Max	**0.30 mm**	**0.0118 in.**	

AUTOMATIC SHIFT SCHEDULE

A340E

SHIFT POINT

Shift position	Shifting point		Vehicle speed km/h (mph)
D (NORM)	Throttle valve fully opened	1→2	58–62 (36–39)
		2→3	103–111 (64–69)
		3→O/D	143–151 (89–94)
		O/D→3	136–144 (85–90)
		3→2	95–99 (59–62)
		2→1	46–49 (28–30)
	Throttle valve fully closed	3→O/D	41–46 (25–29)
		O/D→3	25–29 (16–18)
D (PWR)	Throttle valve fully opened	1→2	58–62 (36–39)
		2→3	113–120 (70–75)
		3→O/D	147–154 (91–96)
		O/D→3	140–149 (87–93)
		3→2	105–112 (65–70)
		2→1	45–49 (28–30)
	Throttle valve fully closed	3→O/D	45–49 (28–30)
		O/D→3	25–29 (16–18)
2 (NORM and PWR)	Throttle valve fully opened	1→2	50–54 (31–34)
		2→3	120–127 (75–79)
		3→2	113–121 (70–75)
		2→1	45–49 (28–30)
L (NORM and PWR)	Throttle valve fully opened	3→2	96–104 (60–65)
		2→1	55–59 (34–37)

LOCK–UP POINT

D position Throttle valve opening 5%	Lock–up ON km/h (mph)	Lock–up OFF km/h (mph)
*3rd Gear (NORM)	75–79 (47–49)	68–72 (42–45)
*3rd Gear (PWR)	65–69 (40–43)	58–62 (36–39)
O/D Gear (NORM)	75–79 (47–49)	65–69 (40–43)
O/D Gear (PWR)	75–79 (47–49)	68–72 (42–45)

* : O/D main switch OFF

A340F

SHIFT POINT

Shift position	Shifting point		Vehicle speed km/h (mph)
D (NORM)	Throttle valve fully opened	1→2	44–48 (27–30)
		2→3	93–99 (58–61)
		3→O/D	134–141 (83–87)
		O/D→3	128–135 (79–84)
		3→2	87–94 (54–58)
		2→1	40–43 (25–27)
	Throttle valve fully closed	3→O/D	35–39 (22–24)
		O/D→3	21–25 (13–16)
D (PW R)	Throttle valve fully opened	1→2	47–51 (29–32)
		2→3	93–99 (58–61)
		3→O/D	148–155 (92–96)
		O/D→3	143–149 (89–92)
		3→2	87–94 (54–58)
		2→1	41–45 (25–28)
	Throttle valve fully closed	3→O/D	50–53 (31–33)
		O/D→3	21–25 (13–16)
2 (NORM and PWR)	Throttle valve fully opened	1→2	43–46 (27–29)
		2→3	103–109 (64–68)
		3→2	97–103 (60–64)
		2→1	38–42 (24–26)
L (NORM and PWR)	Throttle valve fully opened	3→2	82–89 (51–55)
		2→1	47–51 (29–32)

LOCK– UP POINT

D position Throttle valve opening 5%	Lock –up ON km/h (mph)	Look –up OFF km/h (mph)
*3rd Gear (NORM)	41–45 (25–28)	38–42 (24–26)
*3rd Gear (PWR)	55–59 (34–37)	50–53 (31–33)
O/D Gear (NORM)	59–63 (37–39)	55–59 (34–37)
O/D Gear (PWR)	75–79 (47–49)	70–73 (43–45)

* : O/D main switch OFF

TORQUE SPECIFICATIONS

Part tightened		N·m	kgf·cm	ft·lbf
Oil cooler pipe union nut		34	350	25
Torque converter clutch x Drive plate		41	420	30
Drive plate x Crankshaft		83	850	61
Extension housing x Transmission housing (A340E)		34	345	25
Parking lock pawl bracket		7.4	75	65 in.·lbf
Valve body x Transmission		10	100	7
Detent spring x Valve body		10	100	7
Solenoid x Valve body		10	100	7
Oil strainer		10	100	7
Oil pan		7.4	75	65 in.·lbf
No.2 vehicle speed sensor		16	160	12
Rear support member x Transfer under cover (A340F)		29	300	22
Rear support member x Frame		95	970	70
Cooler union		29	300	22
Park/Neutral position switch	Bolt	13	130	9
	Nut	6.9	70	61 in.·lbf
Control shaft lever		16	160	12
Oil pan drain plug		20	205	15
Engine rear mounting x Extension housing (A340E)		25	260	19
Engine rear mounting x Engine rear mounting bracket (A340E)		13	130	9
Exhaust manifold x Front exhaust pipe		62	630	46
Front exhaust pipe clamp		19	195	14
Front exhaust pipe bracket x Transmission		39	400	29
Front exhaust pipe x Three–way catalytic converter		39	400	29
Stiffener plate x Converter cover		37	380	27
Stabilizer bar link x Lower suspension arm		25	260	19
Stabilizer bar bracket x Frame		29	300	22
Propeller shaft x Differential (A340E)		74	750	54
Engine under cover		29	300	22
Dynamic damper (A340E)		37	380	27
Rear propeller shaft x Rear differential (A340F)		74	750	54
Rear propeller shaft x Transfer (A340F)		74	750	54
Front propeller shaft x Front differential (A340F)		74	750	54
Front propeller shaft x Transfer (A340F)		74	750	54

SHIFT LOCK SYSTEM

COMPONENTS AND CIRCUIT

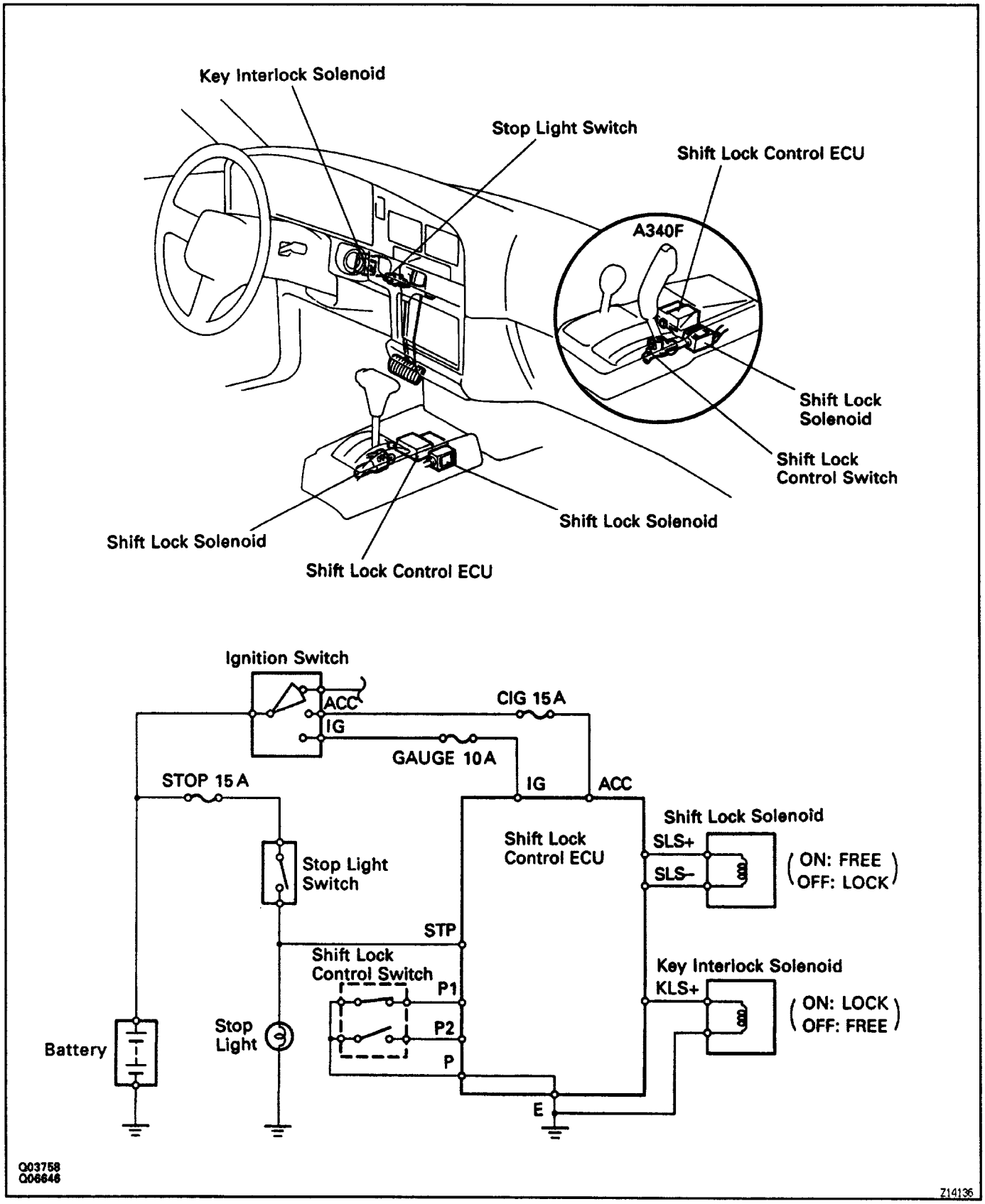

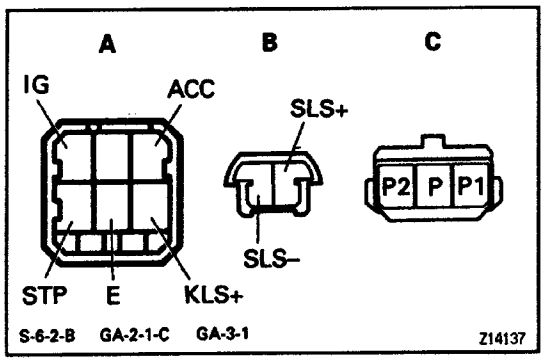

ELECTRIC CONTROL COMPONENTS INSPECTION

1. INSPECT SHIFT LOCK CONTROL ECU

Using a voltmeter, measure the voltage at each terminal.

Connector	Terminal	Measuring condition		Voltage (V)
A	ACC – E	IG SW ACC position		**10 – 14**
	IG–E	IG SW ON position		**10 – 14**
	STP – E	Depress brake pedal		**10 – 14**
	KLS+–E	①	IG SW ACC position and P position	**0**
		②	P → R, N, D, 2, L position	**10 – 14**
		③	↑ (Approx. after second)	**6 – 9**
B	SLS + – SLS –	①	IG SW ON position and P position	**0**
		②	Depress brake pedal	**10 – 14**
		③	P → R, N, D,.2, L positions or release brake pedal	**0**
C	P1 – P	①	IG SW ON, P position and depress brake pedal	**0**
		②	R, N, D, 2, L positions	**10 – 14**
	P2–P	①	IG SW ACC position and P position	**10 – 14**
		②	R, N, D, 2, L positions	**0**

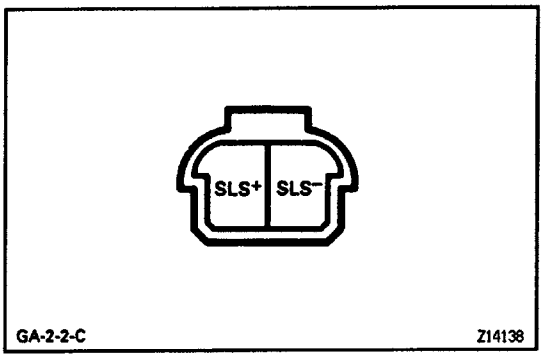

2. INSPECT SHIFT LOCK SOLENOID

(a) Disconnect the solenoid connector.
(b) Using an ohmmeter, measure the resistance between terminals.
Standard resistance:
29–36 Ω
(c) Apply the battery positive voltage between terminals. At this time, confirm that solenoid operates.

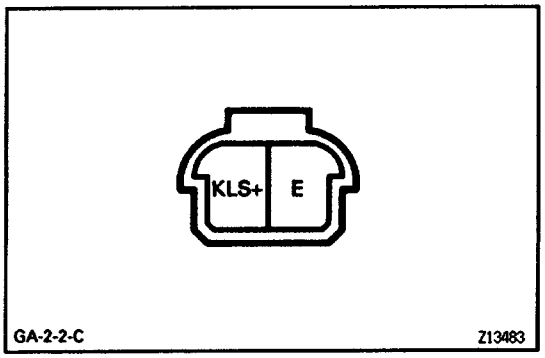

3. INSPECT KEY INTERLOCK SOLENOID

(a) Disconnect the solenoid connector.
(b) Using an ohmmeter, measure the resistance between terminals.
Standard resistance:
12–17 Ω
(c) Apply the battery positive voltage between terminals. At this time, confirm that solenoid operates.

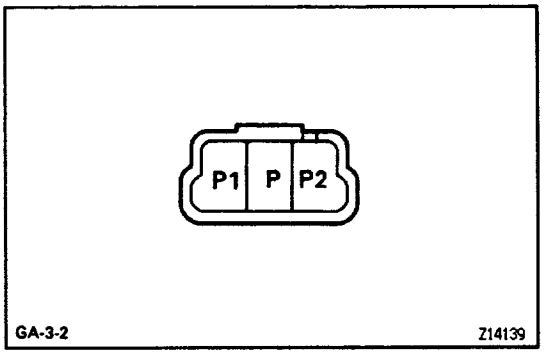

4. INSPECT SHIFT LOCK CONTROL SWITCH

Inspect that there is continuity between each terminals.

Shift position	Tester condition to terminal	Specified value
P position (Release button is not pushed)	**P1 – P**	**Continuity**
R, N, D, 2, L positions	**P2 – P**	**Continuity**

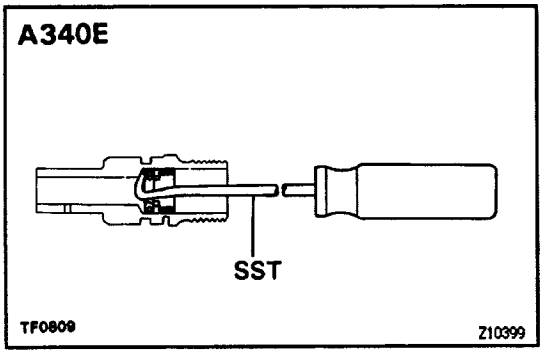

SPEEDOMETER DRIVEN GEAR

OIL SEAL REPLACEMENT

1. REMOVE SPEEDOMETER DRIVEN GEAR OIL SEAL

Using SST, remove the oil seal.
SST 09921–00010

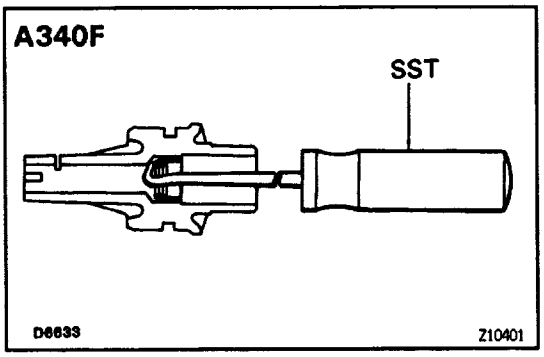

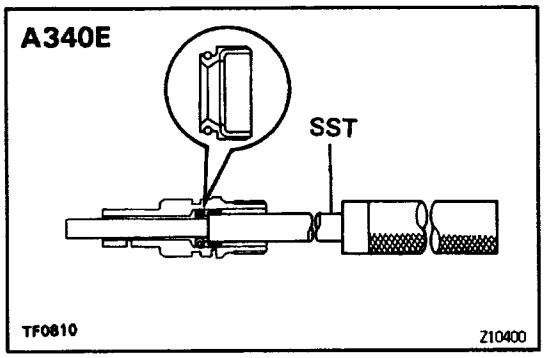

2. INSTALL SPEEDOMETER DRIVEN GEAR OIL SEAL

Using SST, install a new oil seal.
SST 09201–10000 (09201 –01080)
Drive in depth:
20 mm (0.79 in.)

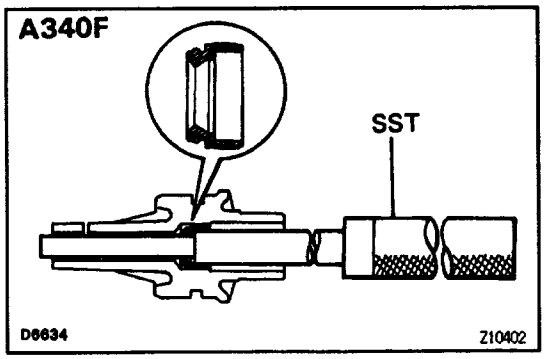

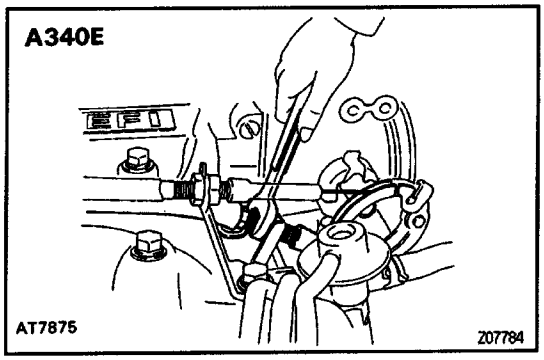

THROTTLE CABLE

THROTTLE CABLE REMOVAL

1. DISCONNECT THROTTLE CABLE

(a) Disconnect the cable housing from the bracket.

(b) Disconnect the cable from the throttle linkage.

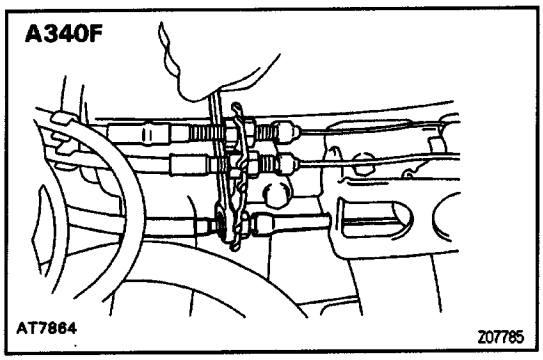

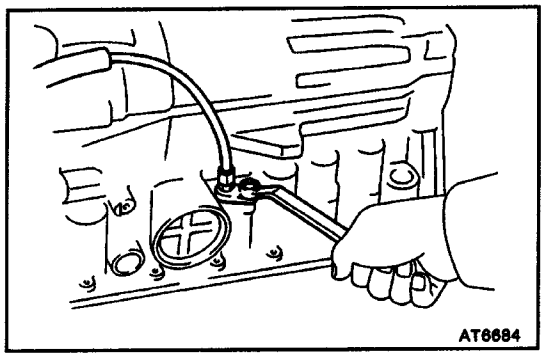

2. REMOVE VALVE BODY

(See page AT1–56)

3. PUSH THROTTLE CABLE OUT OF TRANSMISSION CASE

Remove the retaining bolt and pull out the throttle cable.

THROTTLE CABLE INSTALLATION

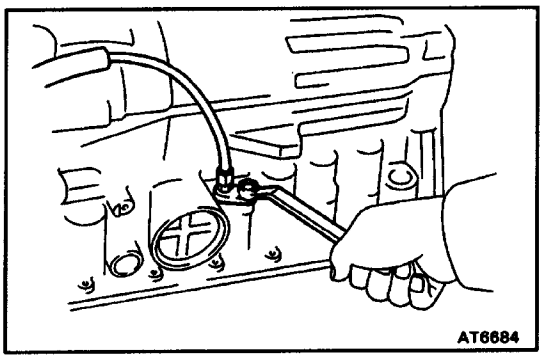

1. INSTALL CABLE IN TRANSMISSION CASE

Install the retaining bolt and push in the throttle cable.

2. INSTALL VALVE BODY

(See page AT1–58)

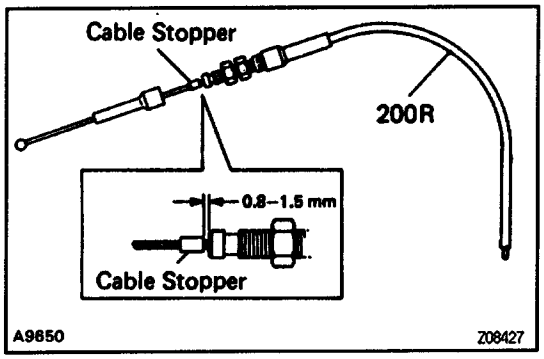

3. IF THROTTLE CABLE IS NEW, STAKE STOPPER ON INNER CABLE

HINT: New cable does not have a staked cable stopper.

(a) Bend the cable so there is radius of about 200 R.

(b) Pull the inner cable lightly until a slight resistance is felt, and hold it.

(c) Stake the stopper, 0.8 – 1.5 mm (0.031 – 0.059 in.) from the end of outer cable.

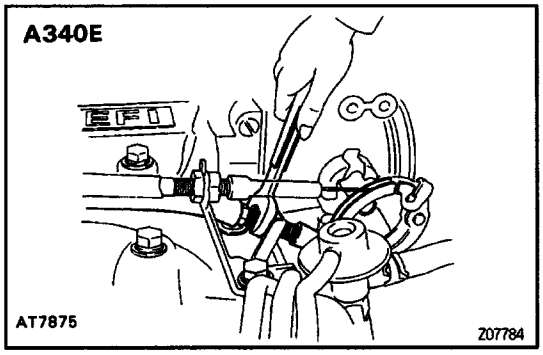

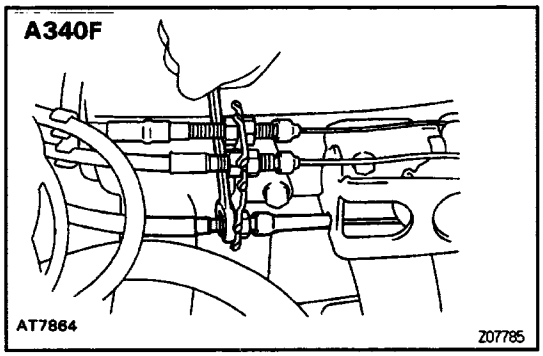

4. CONNECT THROTTLE CABLE

(a) Connect the cable to the throttle cable.

(b) Connect the cable housing to the bracket.

5. ADJUST THROTTLE CABLE

(See page AT1–25)

6. TEST DRIVE VEHICLE

TROUBLESHOOTING

BASIC TROUBLESHOOTING

Before troubleshooting an electronically controlled transmission, first determine whether the problem is electrical or mechanical. To do this, just refer to the basic troubleshooting flow–chart provided below. If the cause is already known, using the basic troubleshooting chart below a long with the general troubleshooting chart on the following page should speed the procedure.

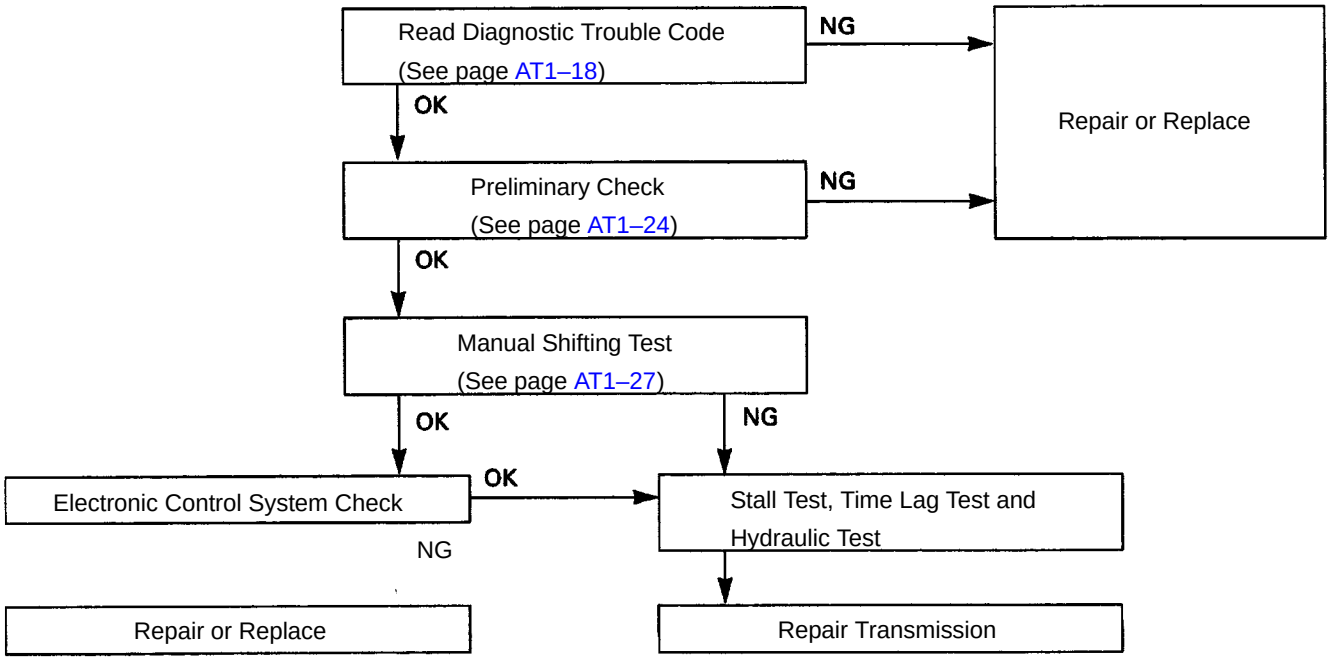

NOTICE: Refer to A340E, A340F, A340H Automatic Transmission Repair Manual (Pub. No. RM391 U) when ★ mark appears in the column for page numbers.

Problem	Possible Cause	Remedy	Page
Fluid discolored or smells burnt	Fluid contaminated Torque converter clutch faulty Transmission faulty	Replace fluid Replace torque converter clutch Disassemble and inspect transmission	AT1–24 AT1–71 ★
Vehicle does not move in any forward position of reverse	Manual linkage out of adjustment Valve body or primary regulator faulty Parking lock pawl faulty Torque converter clutch faulty Converter drive plate broken oil pump intake screen blocked Transmission faulty	Adjust linkage Inspect valve body Inspect parking lock pawl Replace torque converter clutch Replace drive plate Clean screen Disassemble and inspect transmission	AT1–26 ★ AT1–62 AT1–71 AT1–74 ★ ★
Shift lever position incorrect	Manual linkage out of adjustment Manual valve and lever faulty Transmission faulty	Adjust linkage Inspect valve body Disassemble and inspect transmission	AT1–26 ★ ★
Harsh engagement into any drive position	Throttle cable out of adjustment Valve body or primary regulator faulty Accumulator piston faulty Transmission faulty	Adjust –throttle cable Inspect valve body Inspect accumulator pistons Disassemble and inspect transmission	AT1–25 ★ ★ ★
Delayed 1–2, 2–3 or 3–O/D up–shift, or down–shift, from O/D–3 or 3–2 and shifts back to O/D or 3	Electronic control faulty Valve body faulty Solenoid valve faulty	Inspect electronic control Inspect valve body Inspect solenoid valve	AT1–28,29 ★ AT1–39
Slips on 1–2, 2–3 or 3–O/D up–shift, or slips or shudders on acceleration	Manual linkage out of adjustment Throttle cable out of adjustment Valve body faulty Solenoid valve faulty Transmission faulty	Adjust linkage Adjust throttle cable Inspect valve body Inspect solenoid valve Disassemble and inspect transmission	AT1–26 AT1–25 ★ AT1–39 ★
Drag, binding or tie–up on 1–2, 2–3 or 3–O/D up–shift	Manual linkage out of adjustment Valve body faulty Transmission faulty	Adjust linkage Inspect valve body Disassemble and inspect transmission	AT1–26 ★ ★

NOTICE: Refer to A340E. A340F, A340H Automatic Transmission Repair Manual (Pub. No. RM391 U) when ★ mark appear: in the column for page number:.

Problem	Possible cause	Remedy	Page
No lock–up in 2nd, 3rd or O/D	Electronic control faulty	Inspect electronic control	AT1–28,29
	Valve body faulty	Inspect valve body	★
	Solenoid valve faulty	Inspect solenoid valve	AT1–39
	Transmission faulty	Disassemble and Inspect transmission	★
Harsh down–shift	Throttle cable out of adjustment	Adjust throttle cable	AT1–25
	Throttle cable and cam faulty	Inspect throttle cable and cam	AT1–63
	Accumulator pistons faulty	Inspect accumulator pistons	★
	Valve body faulty	Inspect valve body	★
	Transmission faulty	Disassemble and inspect transmission	★
No down–shift when coasting	Valve body faulty	Inspect valve body	★
	Solenoid valve faulty	Inspect solenoid valve	AT1–39
	Electronic control faulty	Inspect electronic control	AT1–28,29
Down–shift occurs too quickly or too late while coasting	Throttle cable faulty	Inspect throttle cable	AT1–25
	Valve body faulty	Inspect valve body	★
	Transmission faulty	Disassemble and inspect transmission	★
	Solenoid valve faulty	Inspect solenoid valve	AT1–39
	Electronic control faulty	Inspect electronic control	AT1–28,29
No O/D–3, 3–2 or 2–1 kick–down	Solenoid valve faulty	Inspect solenoid valve	AT1–39
	Electronic control faulty	Inspect electronic control	AT1–28,29
	Valve body faulty	Inspect valve body	★
No engine braking in 2 or L position	Solenoid valve faulty	Inspect solenoid valve	AT1–39
	Electronic control faulty	Inspect electronic control	AT1–28,29
	Valve body faulty	Inspect valve body	★
	Transmission faulty	Disassemble and inspect transmission	★
Vehicle does not hold in P	Manual linkage out of adjustment	Adjust linkage	AT1–26
	Parking lock pawl cam and spring faulty	Inspect cam and spring	AT1–62
(A340F) No H2–H4, H4–L4, L4–H4 or H4–H2 change gear position of transfer	Transfer linkage out of adjustment	Adjust linkage	AT1–26
	Transfer faulty	Disassemble and inspect transfer	★

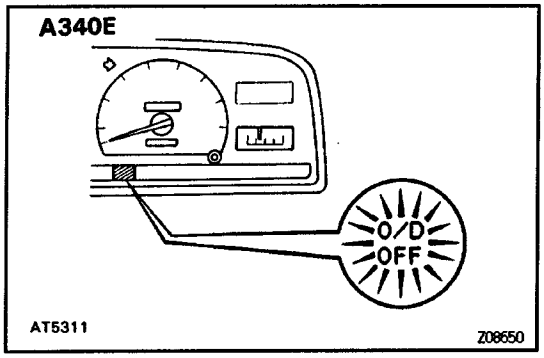

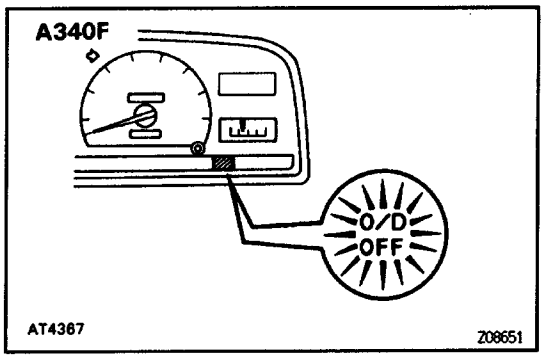

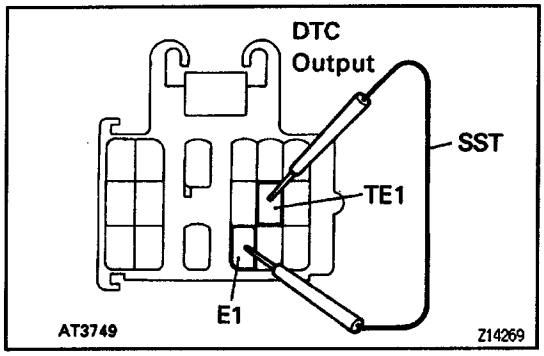

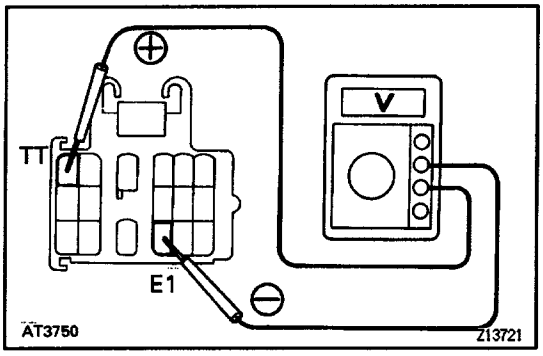

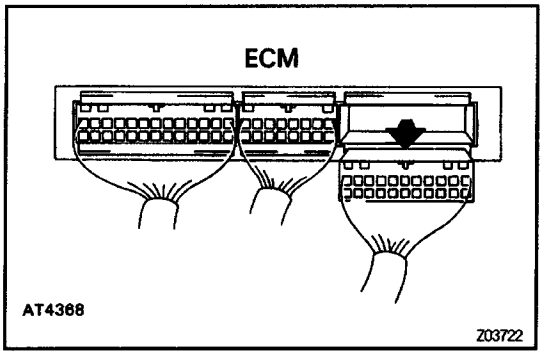

DIAGNOSIS SYSTEM

DESCRIPTION

1. A self–diagnosis function is built into the electrical control system. Warning is indicated by the O/D OFF indicator light.
   HINT: Warning and DTC can be read only when the O/D main switch is ON. If OFF, the O/D OFF light is lit continuously and will not blink.

(a) If a malfunction occurs within the vehicle speed sensors (No. 1 or 2) or solenoids (No. 1 or 2), the O/D OFF light will blink to warn the driver.
However, there will be no warning of a malfunction with lock–up solenoid.

(b) The DTC can be read by the number of blinks of the 0/D OFF indicator light when terminals TE1 and E1 are connected with SST. (See page AT1–18)

(c) The throttle position sensor or brake signal are not indicated, but inspection can be made by checking the voltage at terminal TT of the DLC1.

(d) The signals to each gear can be checked by measuring the voltage at terminal TT of the DLC1 while driving.

2. The DTC is retained in memory by the ECM and due to back – up voltage, is not canceled out when the engine is turned off. Consequently, after repair, it is necessary to turn the ignition switch off and remove the EFI fuse (11 5A) or disconnect the ECM connector to cancel out the DTC. (See page AT1–21)
   HINT:
   - Low battery positive voltage will cause faulty operation of the diagnosis system. Therefore, always check the battery first.
   - Use a voltmeter and ohmmeter that have an impedance of at least 10 kΩ/V.

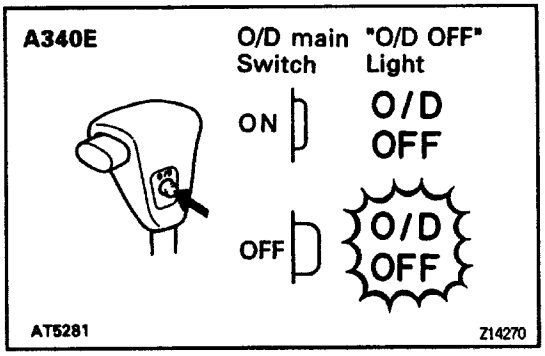

CHECK “O/D OFF” INDICATOR LIGHT

1. Turn the ignition switch ON.
2. The ”O/D OFF” light will come on when the O/D main switch is placed at OFF.
3. When the O/D main switch is set to ON, the ’O/D OFF” light should go out.
   If the ’O/D OFF’ light flashes when the O/D main switch is set to ON, the electronic control system is faulty.

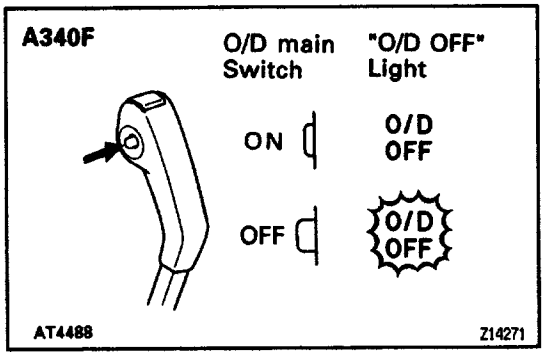

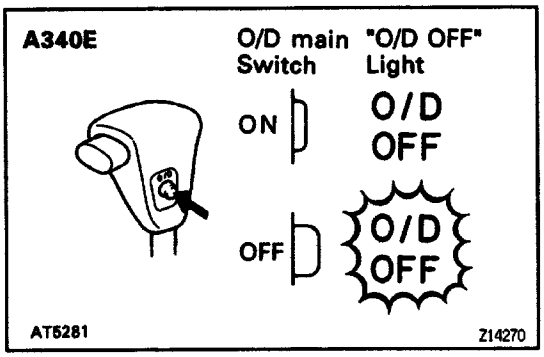

READ DIAGNOSTIC TROUBLE CODE

1. TURN IGNITION SWITCH AND O/D MAIN SWITCH TO ON

Do not start the engine.

HINT: Warning and DTC can be read only when the O/D main switch is ON. If OFF, the O/D OFF light will light continuously and will not blink.

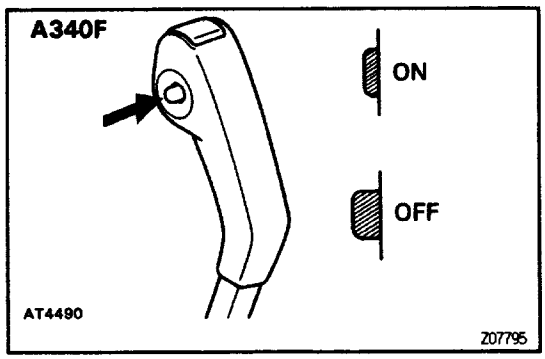

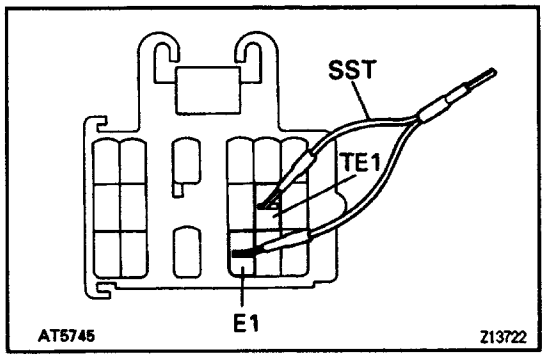

2. CONNECT TE1 AND E1 TERMINALS OF DLC1

Using SST, connect terminals TE1 and E1 of the DLC 1.

SST 09843–18020

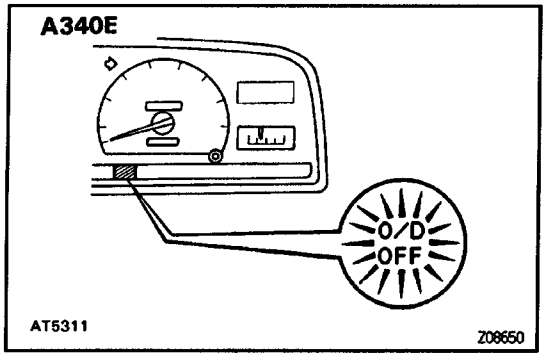

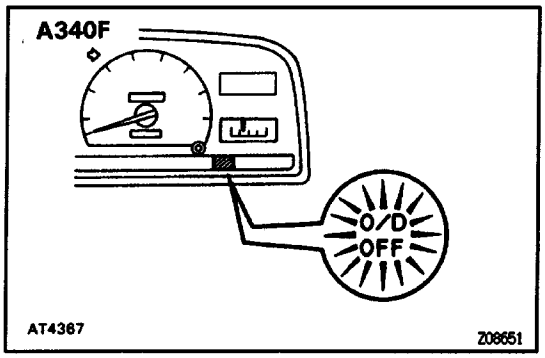

3. READ DIAGNOSTIC TROUBLE CODE

Read the DTC as indicated by the number of times the O/D OFF light flashes.

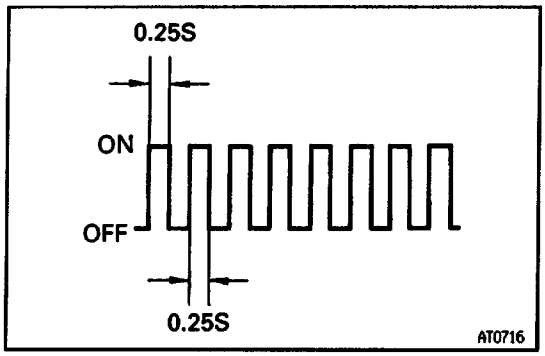

Diagnostic Trouble Code Indication

- If the system is operating normally, the light will flash 2 times per second.
- In the event of a malfunction, the light will flash 1 time per second. The number of blinks will equal the first number and, after 1.5 seconds pause, the second number of the 2 digit DTC. If there are 2 or more codes, there will be a 2.5 seconds pause between each.

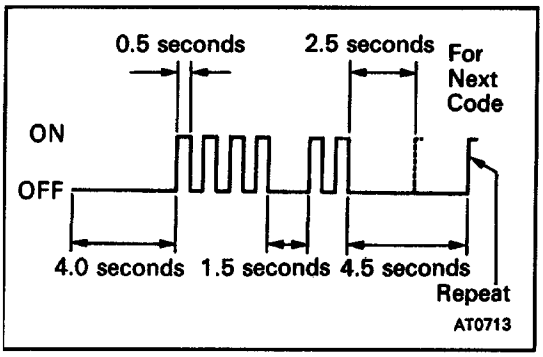

HINT: In the event of several trouble codes occurring simultaneously, indication will began from the smaller value and continue to the larger.

4. REMOVE SST

DIAGNOSTIC TROUBLE CODE

Code No.	Light Pattern	System
–		Normal
42		Defective No. 1 vehicle speed sensor (in combination meter) – severed wire harness or short circuit
61		Defective No.2 vehicle speed sensor (in ATM) – severed wire harness or short circuit
62		Severed No. 1 solenoid or short circuit – severed wire harness or short circuit
63		Severed No.2 solenoid or short circuit – severed wire harness or short circuit
64		Severed lock–up solenoid or short circuit – severed wire harness or short circuit

HINT: If codes 62, 63, or 64 appear, there is an electrical malfunction in the solenoid.
Causes due to mechanical failure, such as a stuck valve, will not appear.

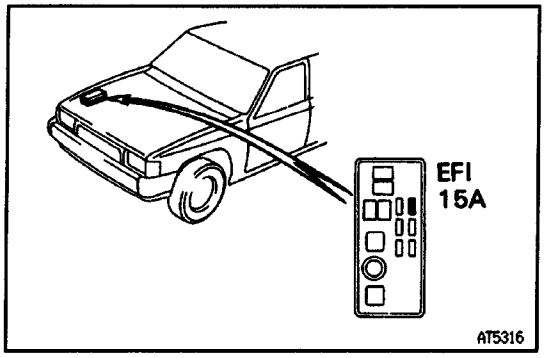

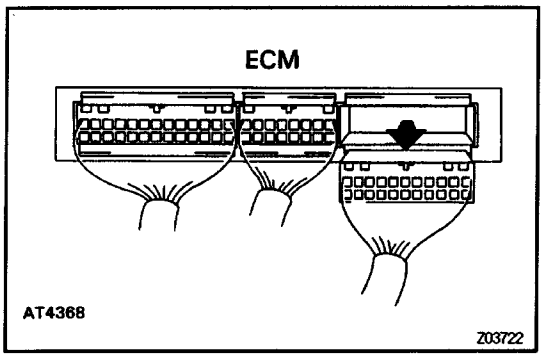

CANCEL OUT DIAGNOSTIC TROUBLE CODE

1. After repair of the trouble area, the DTC retained in memory by the ECM must be canceled by removing the EFI fuse (1 5A) for 10 seconds or more, depending on ambient temperature (the lower the temperature, the longer the fuse must be left out) with the ignition switch OFF.
   HINT:
   - Cancellation can be also done by removing the negative (–) terminal cable from the battery, but in this case other memory systems will be also canceled out.
   - The DTC can be also canceled out by disconnecting the ECM connector.
   - If the DTC is not canceled out, it will be retained by the ECM and appear along with a new code in event of future trouble.
2. After cancellation, perform a road test to confirm that a "normal code" is now read on the O/D OFF light.

TROUBLESHOOTING FLOW–CHART

HINT:

- If DTC Nos.42, 61, 62 or 63 are output, the 0/D OFF indicator light will begin to blink immediately to warn the driver. However, an impact or shock may cause the blinking to stop; but the code will still be retained in the ECM memory until canceled out.
- There is no warning for DTC No.64.
- In the event of a simultaneous malfunction of both No.1 and No.2 vehicle speed sensors, no DTC will appear and the fail–safe system will not function. However, when driving in the D position, the transmission will not up–shift from first gear, regardless of the vehicle speed.

Diagnostic trouble code 42 (No. 1 vehicle speed sensor circuitry)

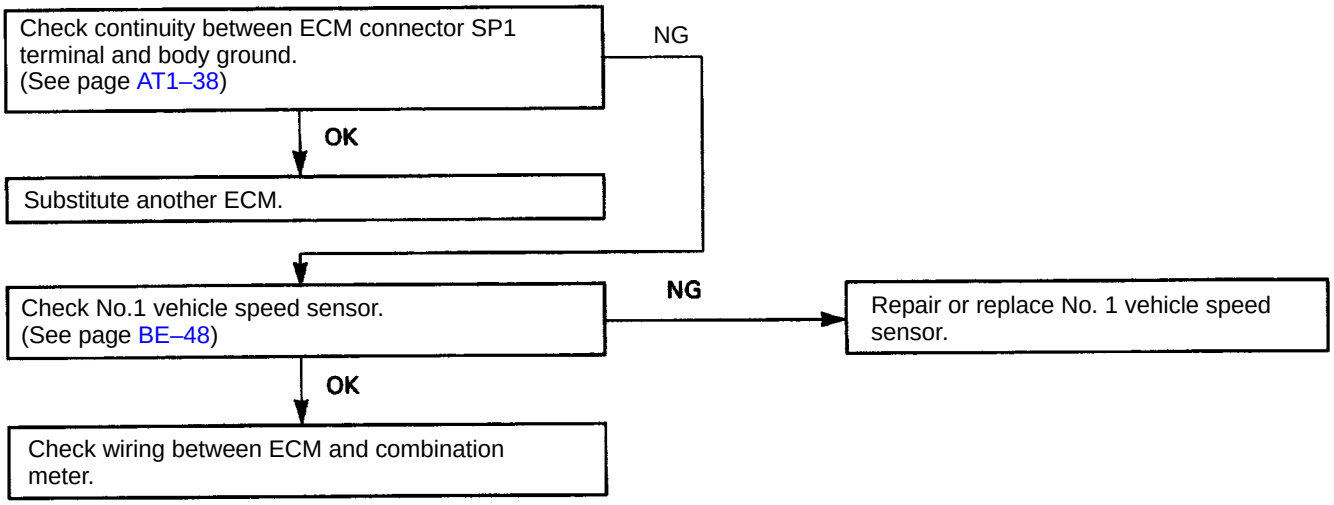

Diagnostic trouble code 61 (No.2 vehicle speed sensor circuitry)

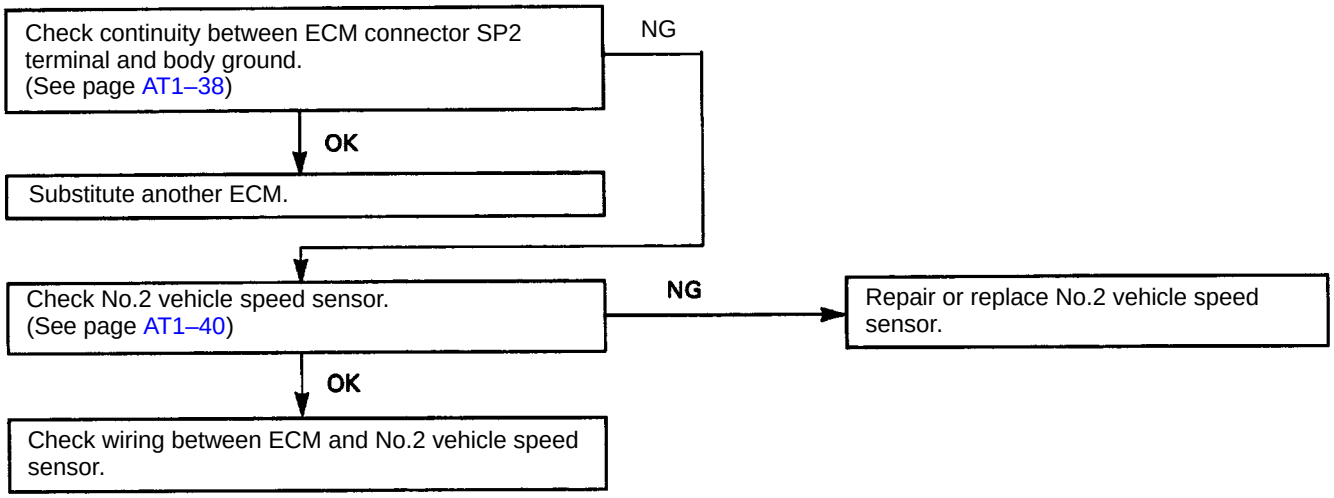

Diagnostic trouble code 62 (No. 1 solenoid valve circuitry)

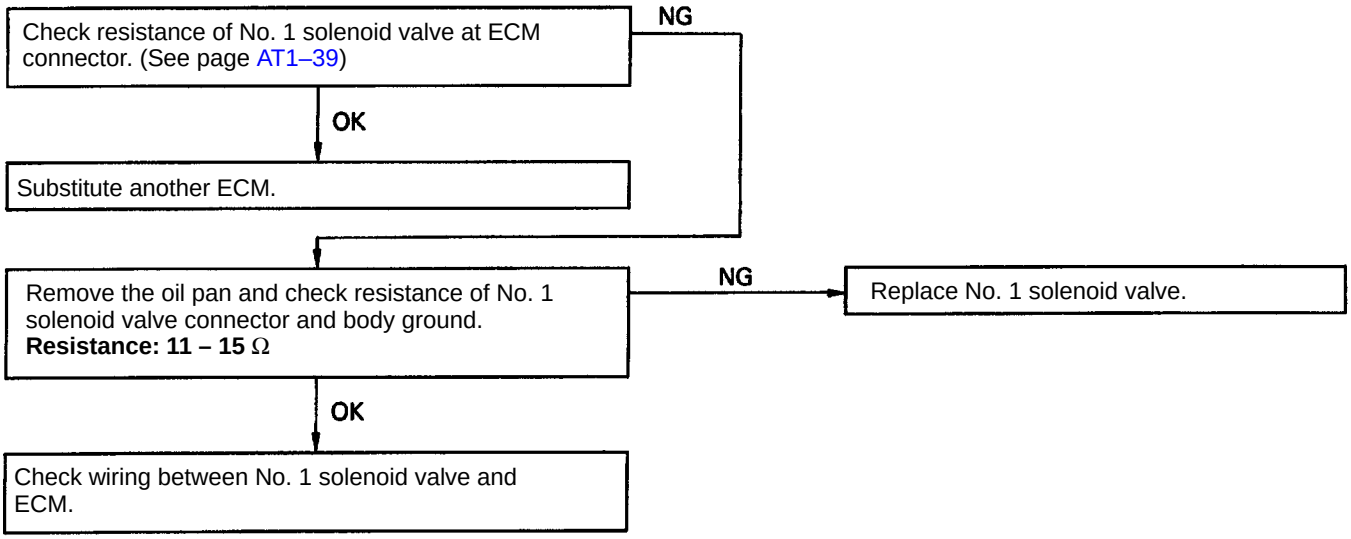

Diagnostic trouble code 63 (No. 2 solenoid valve circuitry)

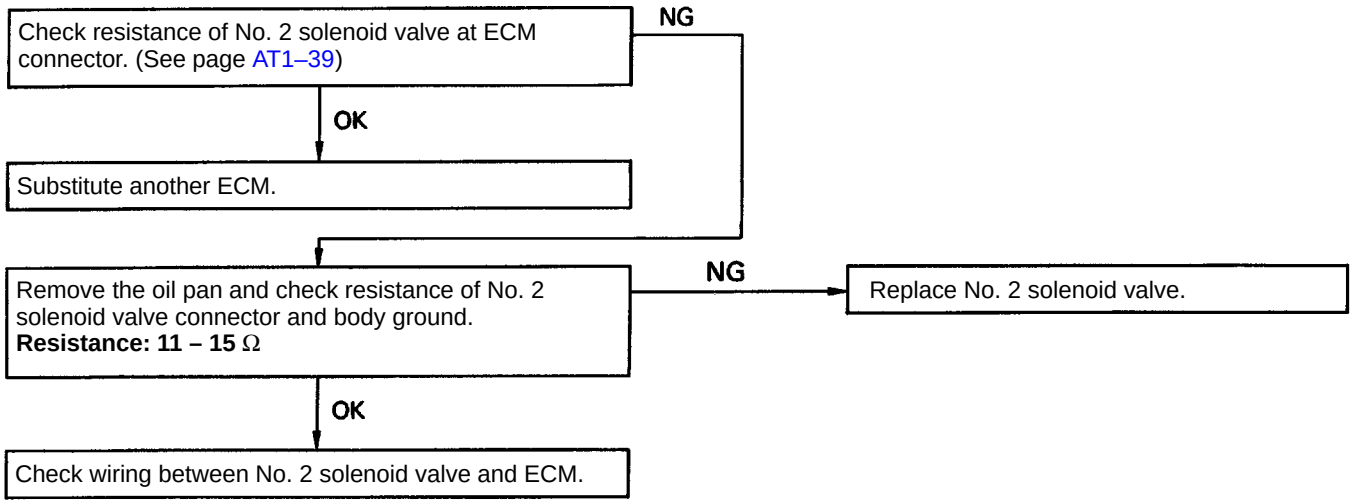

Diagnostic trouble code 64 flock–up solenoid valve circuitry)

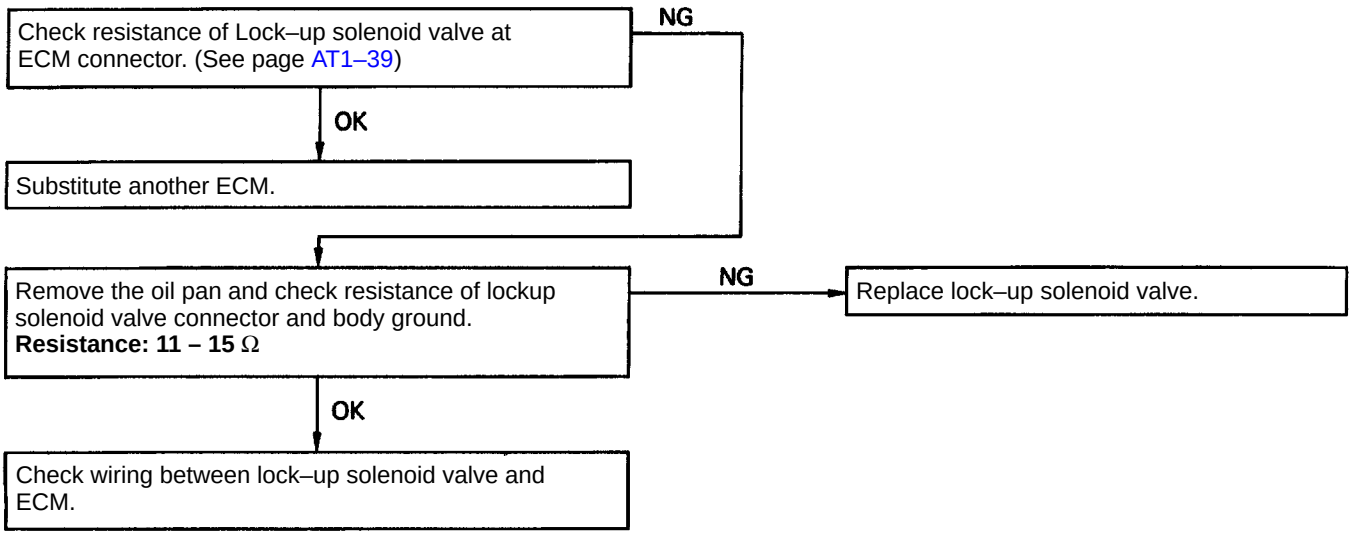

PRELIMINARY CHECK

1. CHECK FLUID LEVEL

HINT:

- The vehicle must have been driven so that the engine and transmission are at normal operating temperature.

Fluid temperature: 70–80˚C (158–176˚F)

- Only use the COOL range on the dipstick as a rough reference when the fluid is replaced or the engine does not run.

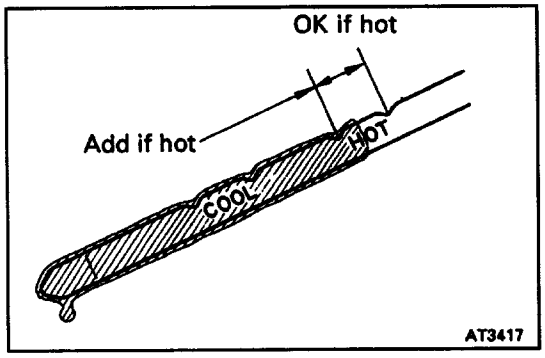

(a) Park the vehicle on a level surface, set the parking brake.
(b) With the engine idling, shift the shift lever into all positions from P to L position and return to P position,
NOTICE: Depress brake pedal.
(c) Pull out the transmission dipstick and wipe it clean.
(d) Push it back fully into the pipe.
(e) Pull it out and check that the fluid level is in the HOT range.
If the level is at the low side, add fluid.
Fluid type:
ATF DEXRON® II
NOTICE: Do not overfill.

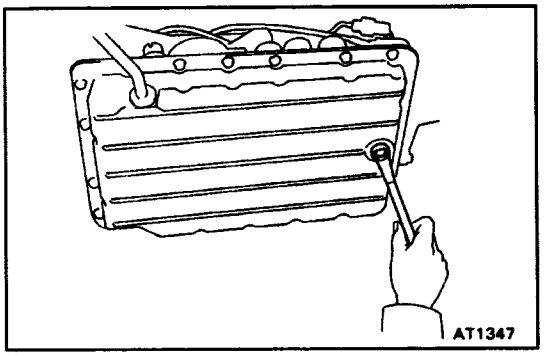

2. CHECK FLUID CONDITION

If the fluid smells burnt or is black, replace it as following procedures.

(a) Remove the drain plug and drain the fluid.
(b) Reinstall the drain plug securely.
(c) With the engine OFF, add new fluid through the oil filler pipe.
Fluid type:
ATF DEXRON® II

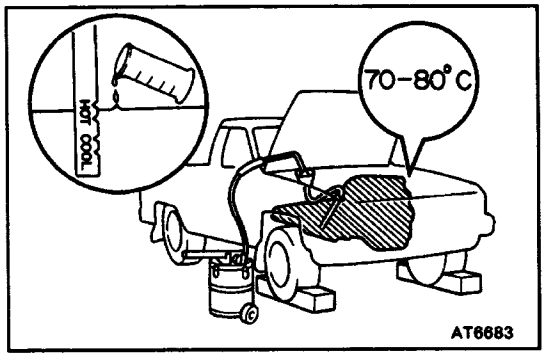

Capacity:

Dry fill

A340E

7.2 liters (7.6 US qts, 6.3 Imp.qts)

A340F

7.6 liters (8.0 US qts, 6.7 Imp.qts)

Drain and refill:

A340E

1.6 liters (1.7 US qts, 1.4 Imp.qts)

A340F

2.0 liters (2.1 US qts. 1.8 Imp.qts)

(d) Start the engine and shift the shift lever into all positions from P to L position and then shift into P position.

(e) With the engine idling, check the fluid level. Add fluid up to the COOL level on the dipstick.

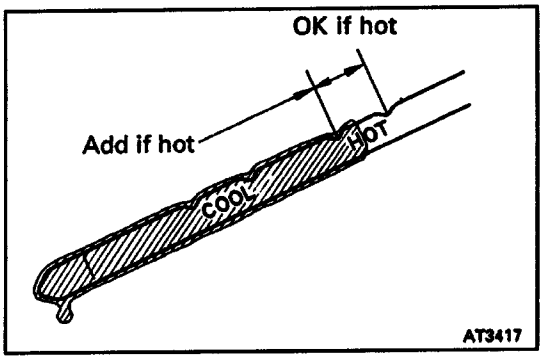

(f) Check the fluid level with the normal operating temperature 70 – 80˚ C (158 –176˚ F) and add as necessary.
NOTICE: Do not overfill.

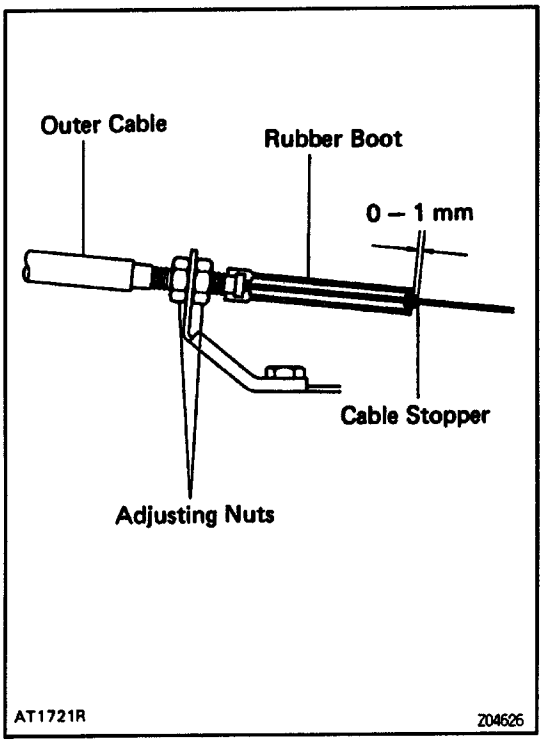

3. INSPECT THROTTLE CABLE

(a) Depress the accelerator pedal all the way and check that the throttle valve opens fully.
HINT: If the valve does not open fully, adjust the accelerator cable.

(b) Fully depress the accelerator pedal.

(c) Measure the distance between the end of the boot and stopper on the cable.
Standard distance:
0–1 mm (0–0.04 in.)
If the distance is not standard, adjust the cable by the adjusting nut.

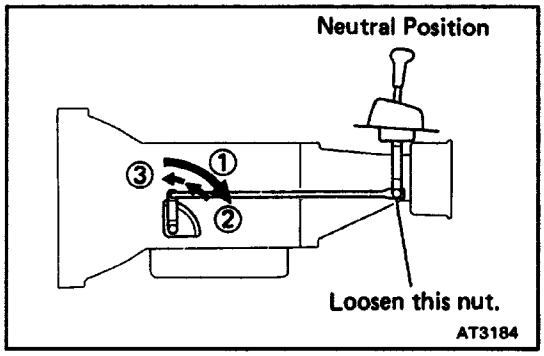

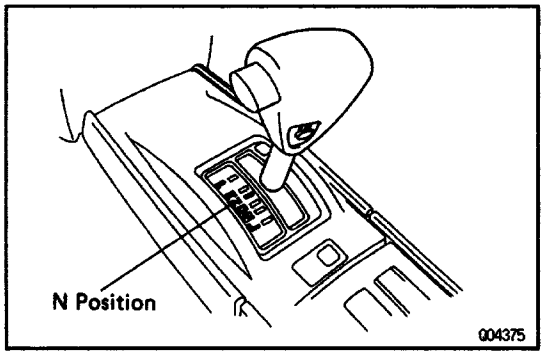

4. INSPECT SHIFT LEVER POSITION

When shifting the shift lever from the N position to other positions, check that the lever can be shifted smoothly and accurately to each position and that the position indicator correctly indicates the position.

If the indicator is not aligned with the correct position, carry out the following adjustment procedures.

(a) Remove the nut on the shift lever.
(b) Push the control shaft lever fully downward.
(c) Return the control shaft lever 2 notches to N position.
(d) Set the shift lever to N position.
(e) While holding the shift lever lightly toward the R position side, adjust the control shaft lever nut.
(f) Tighten the control shaft lever nut.
(g) Start the engine and make sure that the vehicle moves forward when shifting the lever from the N to D position and reverse when shifting it to the R position.

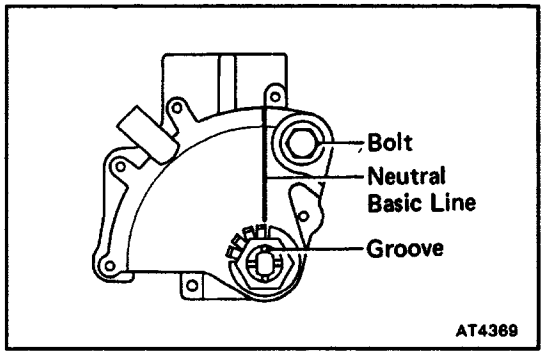

5. INSPECT PARK/NEUTRAL POSITION SWITCH

Check that the engine can be started with the shift lever only in the N or P position, but not in other positions.

If not as stared above, carry out the following adjustment procedures.

(a) Loosen the park/neutral position switch bolt and set the shift lever to the N position.
(b) Align the groove and neutral basic line.
(c) Hold in position and tighten the bolt.

Torque: 13 N–m (130 kgf–cm, 9 ft–lbf)

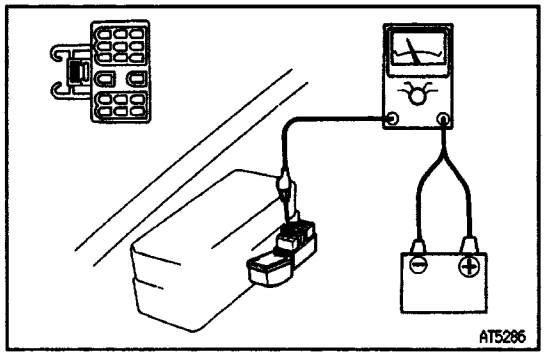

6. INSPECT IDLE SPEED (N POSITION)

Connect a tachometer test probe to the check connector 1 terminal IG (–), inspect the idle speed.

Idle speed:

A340E – 800 ± 50 rpm
A340F – 750 ± 60 rpm
(In N position and air conditioner OFF)

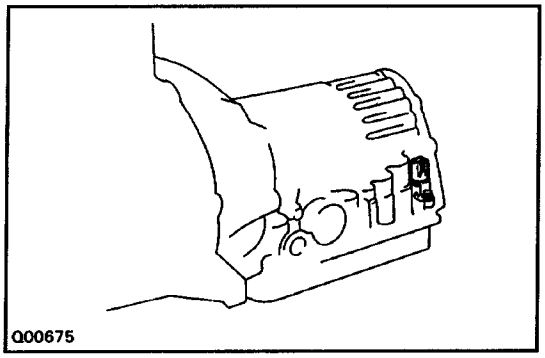

MANUAL SHIFTING TEST

HINT: With this test, it can be determined whether the trouble lies within the electrical circuit or is a mechanical problem in the transmission.

1. DISCONNECT SOLENOID WIRE

2. INSPECT MANUAL DRIVING OPERATION

Check that the shift and gear position correspond with the table below.

Shift position	D	2	L	R	P
Gear position	O/D	3rd	1st	Reverse	Pawl Lock

HINT: If the L, 2 and D position gear positions are difficult to distinguish, perform the following road test.

- While driving, shift through the L, 2 and D position. Check that the gear change corresponds to the shift position.
- If any abnormality is found in the –above test, the problem lies in transmission itself.

3. CONNECT SOLENOID WIRE

4. CANCEL OUT DIAGNOSTIC TROUBLE CODE

(See page AT1–21)

REFERENCE: Possible gear position in accordance with solenoid operating conditions.

Position	NORMAL			NO. 1 SOLENOID MALFUNCTIONING			NO.2 SOLENOID MALFUNCTIONING			BOTH SOLENOIDS MALFUNCTIONING		
	Solenoid Valve		Gear Position	Solenoid Valve		Gear Position	Solenoid Valve		Gear Position	Solenoid Valve		Gear Position
	No.1	No.2		No.1	No.2		No.1	No.2		No.1	No.2	
D position	ON	OFF	1st	×	ON (OFF)	3rd (O/D)	ON	×	1st	×	×	O/D
	ON	ON	2nd	×	ON	3rd	OFF (ON)	×	O/D (1st)	×	×	O/D
	OFF	ON	3rd	×	ON	3rd	OFF	×	O/D	×	×	O/D
	OFF	OFF	O/D	×	OFF	O/D	OFF	×	O/D	×	×	O/D
2 position	ON	OFF	1st	×	ON (OFF)	3rd (O/D)	ON	×	1st	×	×	3rd
	ON	ON	2nd	×	ON	3rd	OFF (ON)	×	3rd (1st)	×	×	3rd
	OFF	ON	3rd	×	ON	3rd	OFF	×	3rd	×	×	3rd
L position	ON	OFF	1st	×	OFF	1st	ON	×	1st	×	×	1st
	ON	ON	2nd	×	ON	2nd	ON	×	1st	×	×	1st

( ): No fail–safe function x : Malfunctions

ELECTRONIC CONTROL SYSTEM

PRECAUTION

Do not open the cover or the case of the ECM and various computer unless absolutely necessary. (If the IC terminals are touched, the IC may be destroyed by static electricity.)

ELECTRONIC CONTROL CIRCUIT

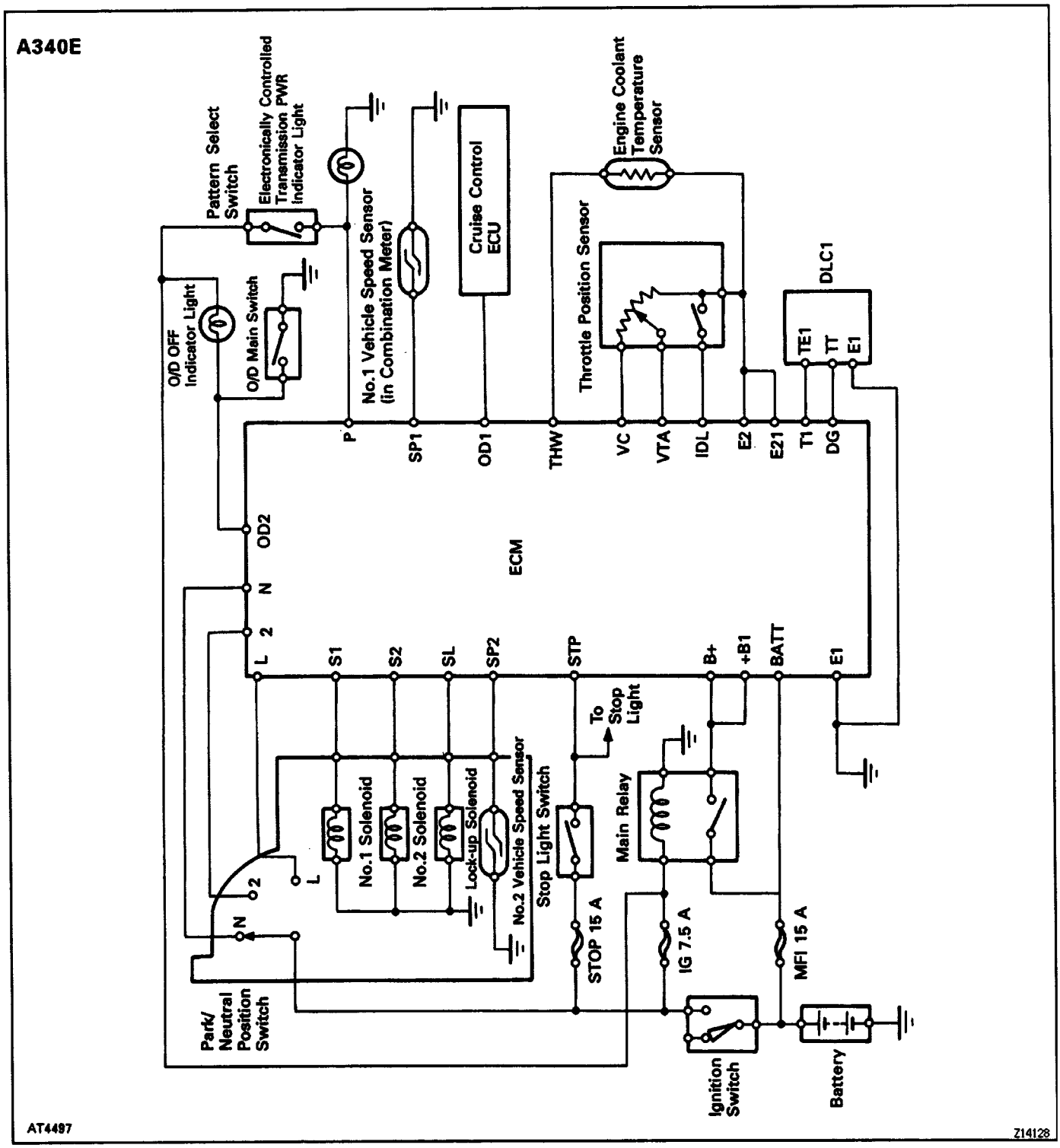

A340F

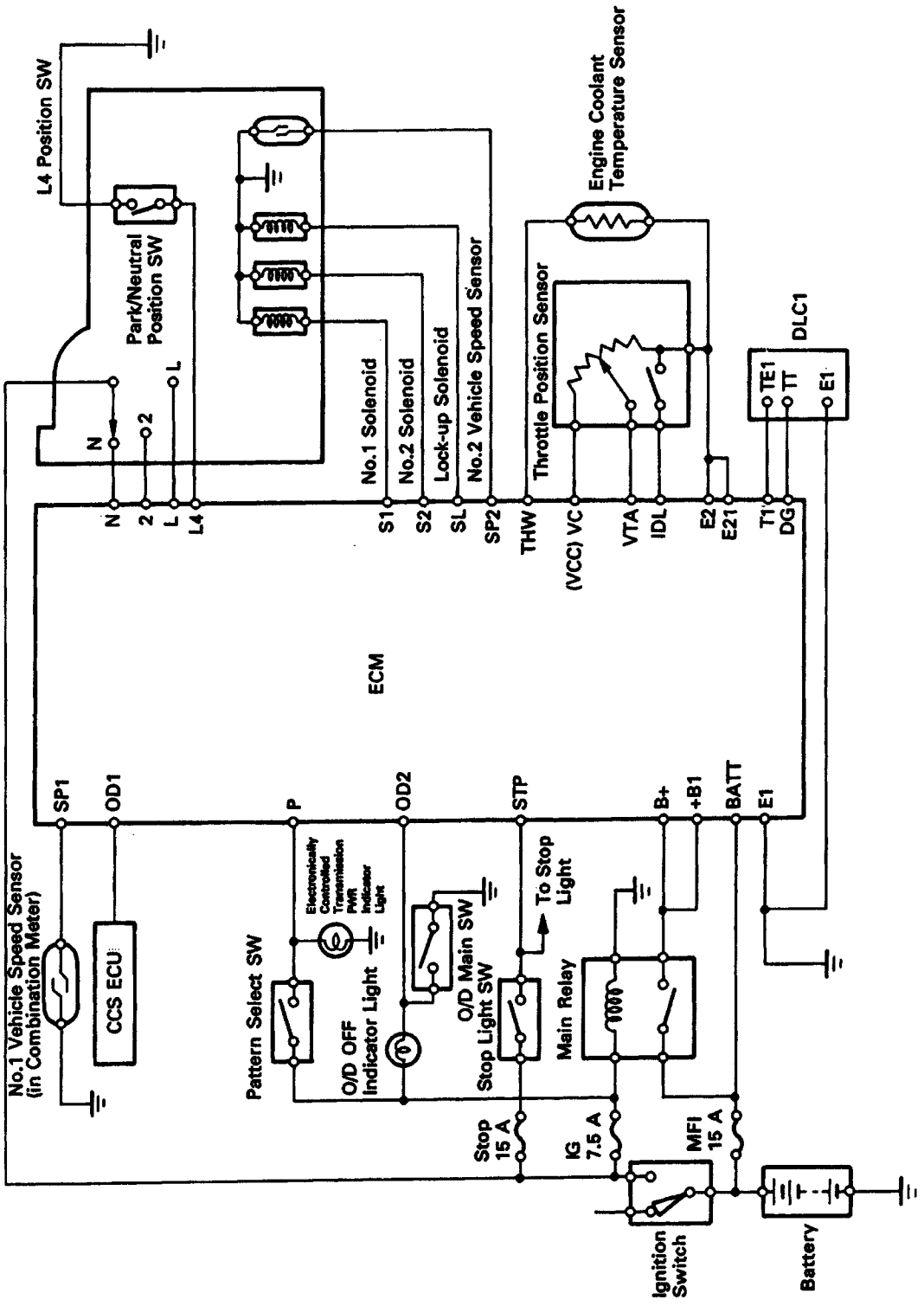

Q03173

Z14129

ELECTRONIC CONTROL COMPONENTS

A340E

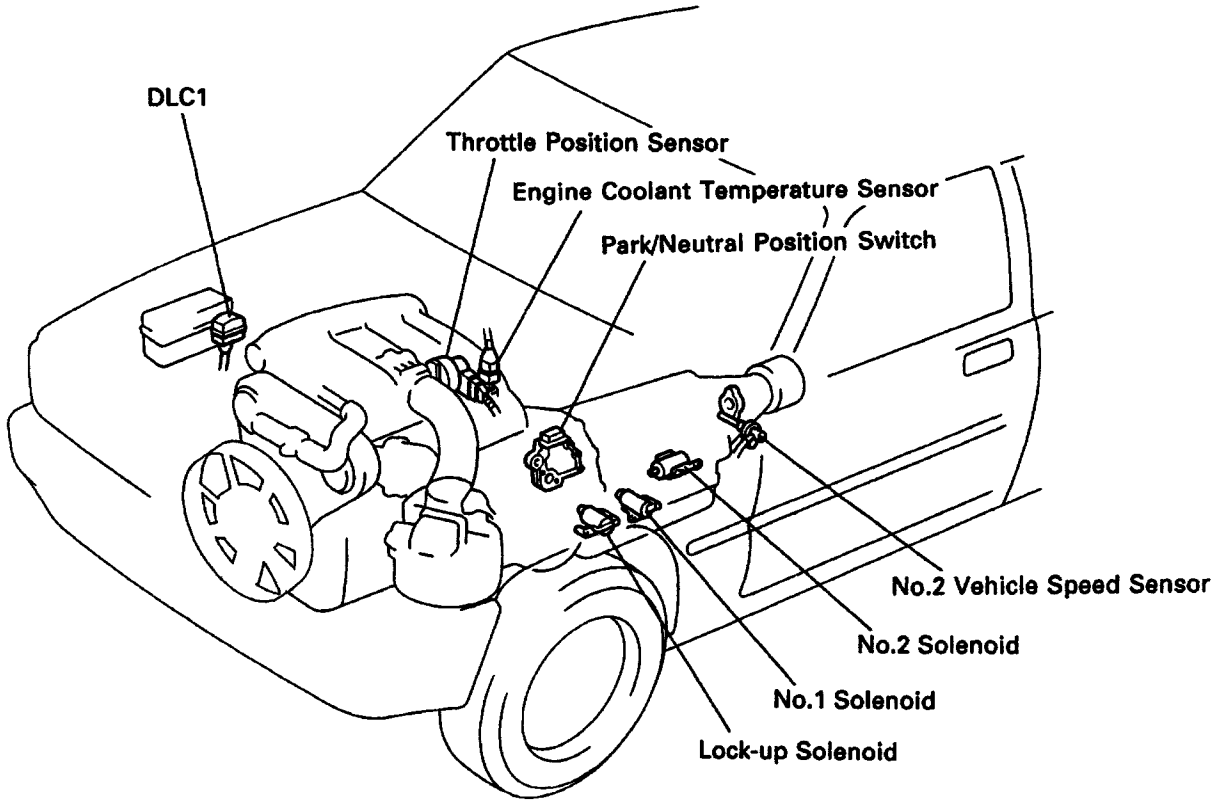

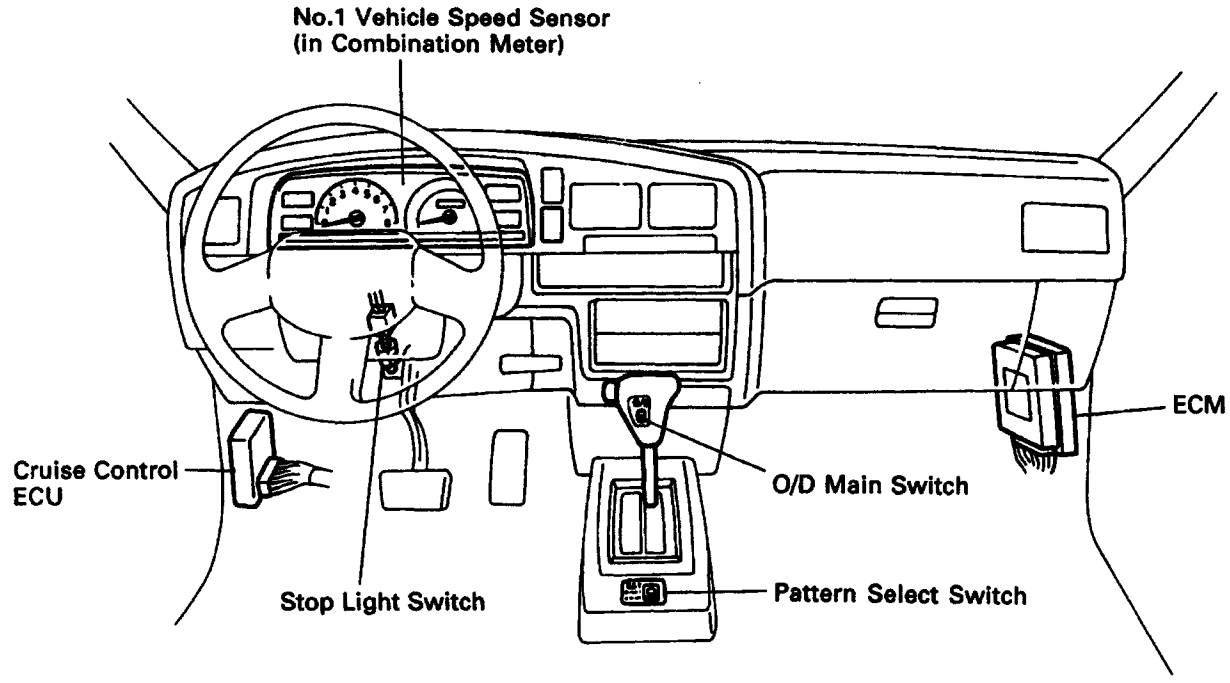

A340F

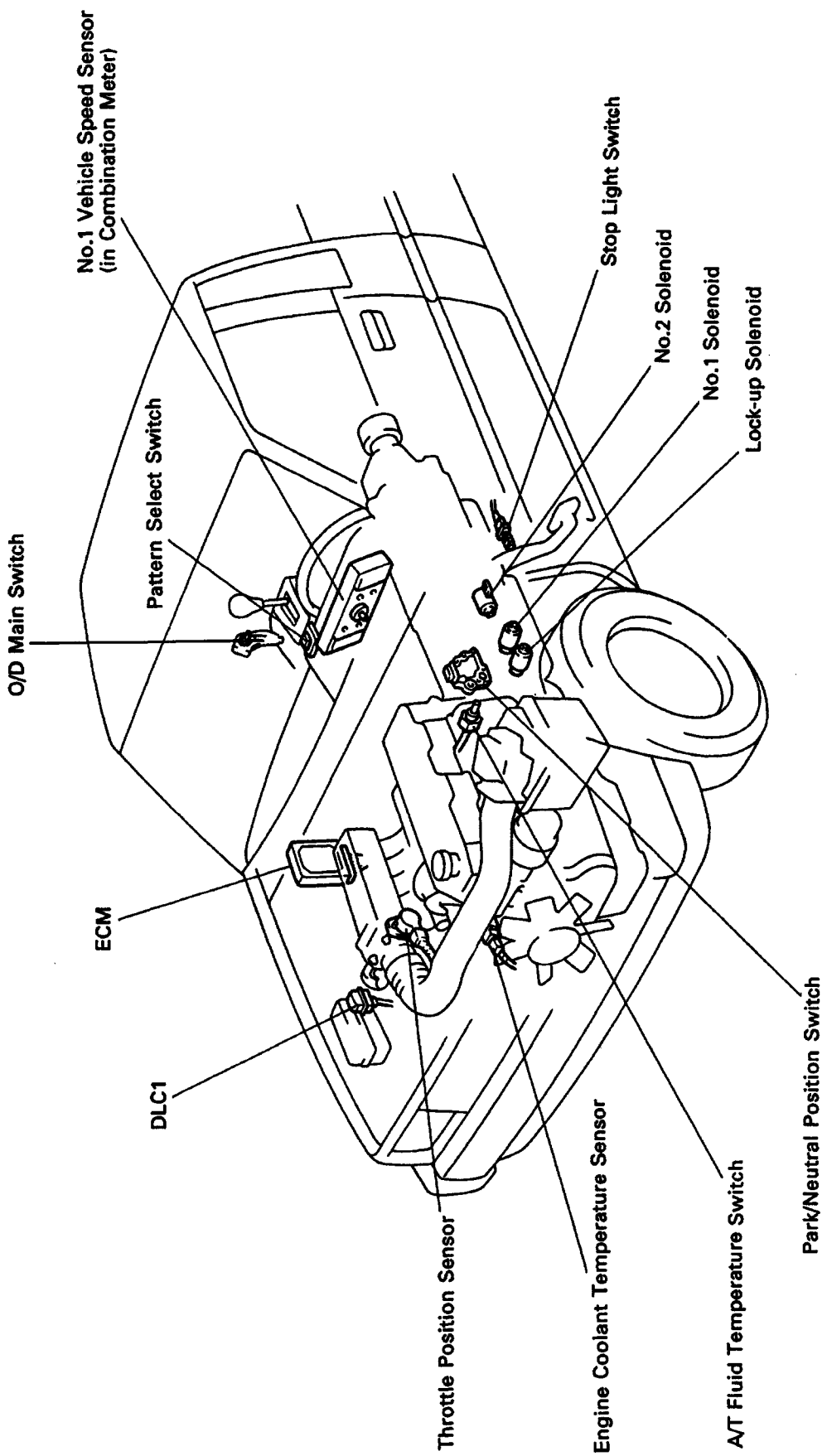

AT5747

Z14131

TROUBLESHOOTING FLOW–CHART

Trouble No. 1 No Shifting

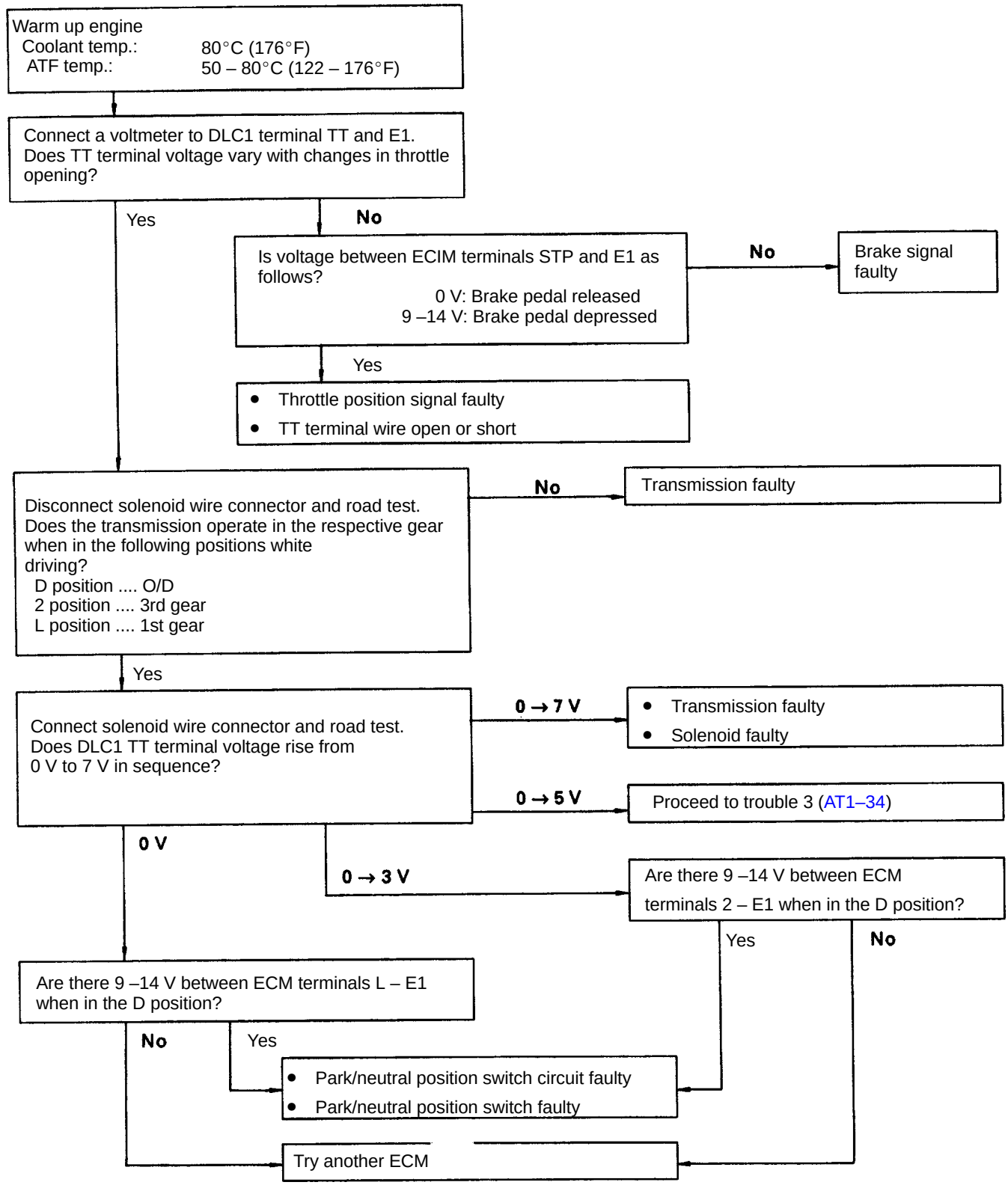

Trouble No.2 Shift point too high or too low

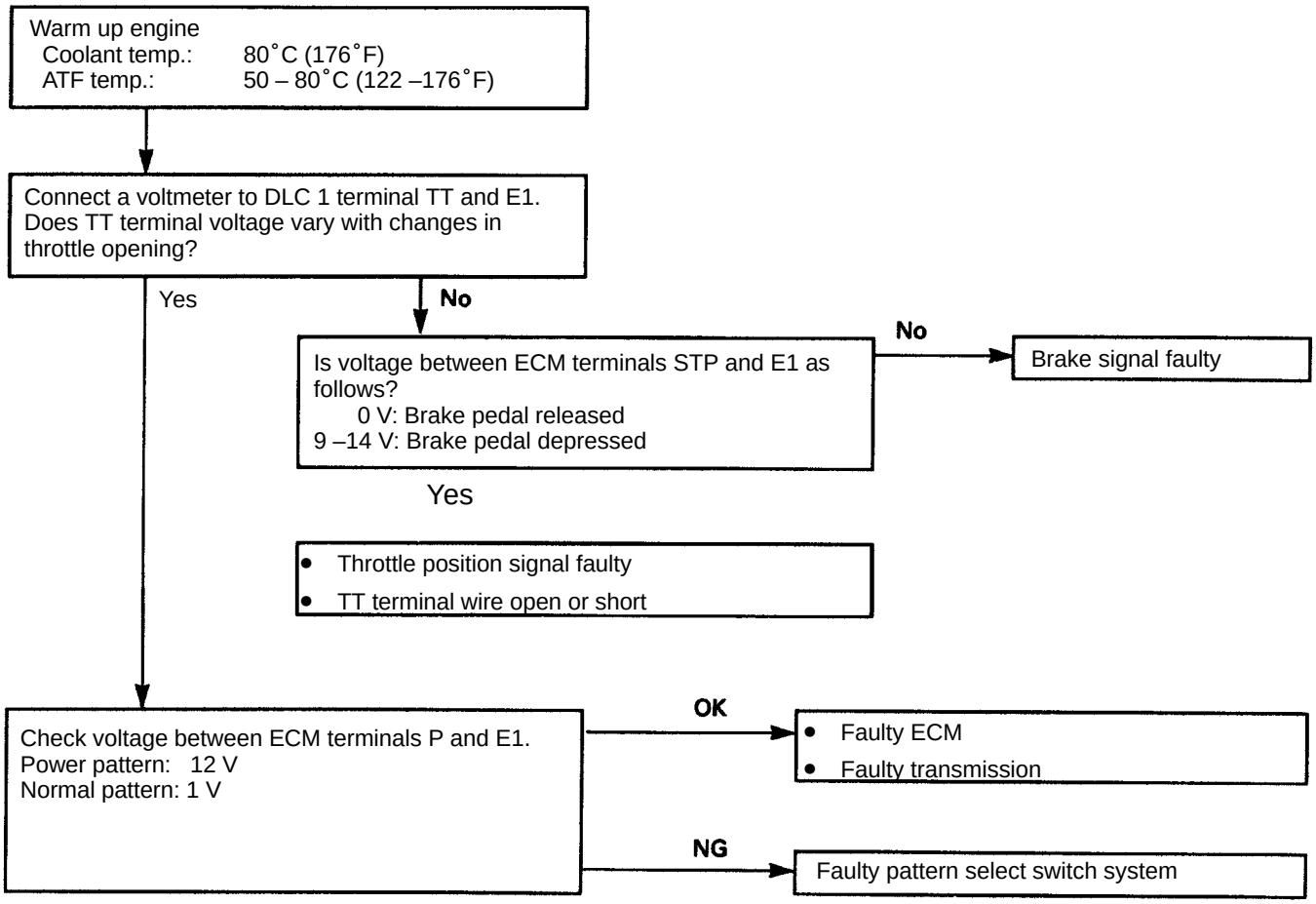

Trouble No.3 No up–shift to overdrive (After warm–up)

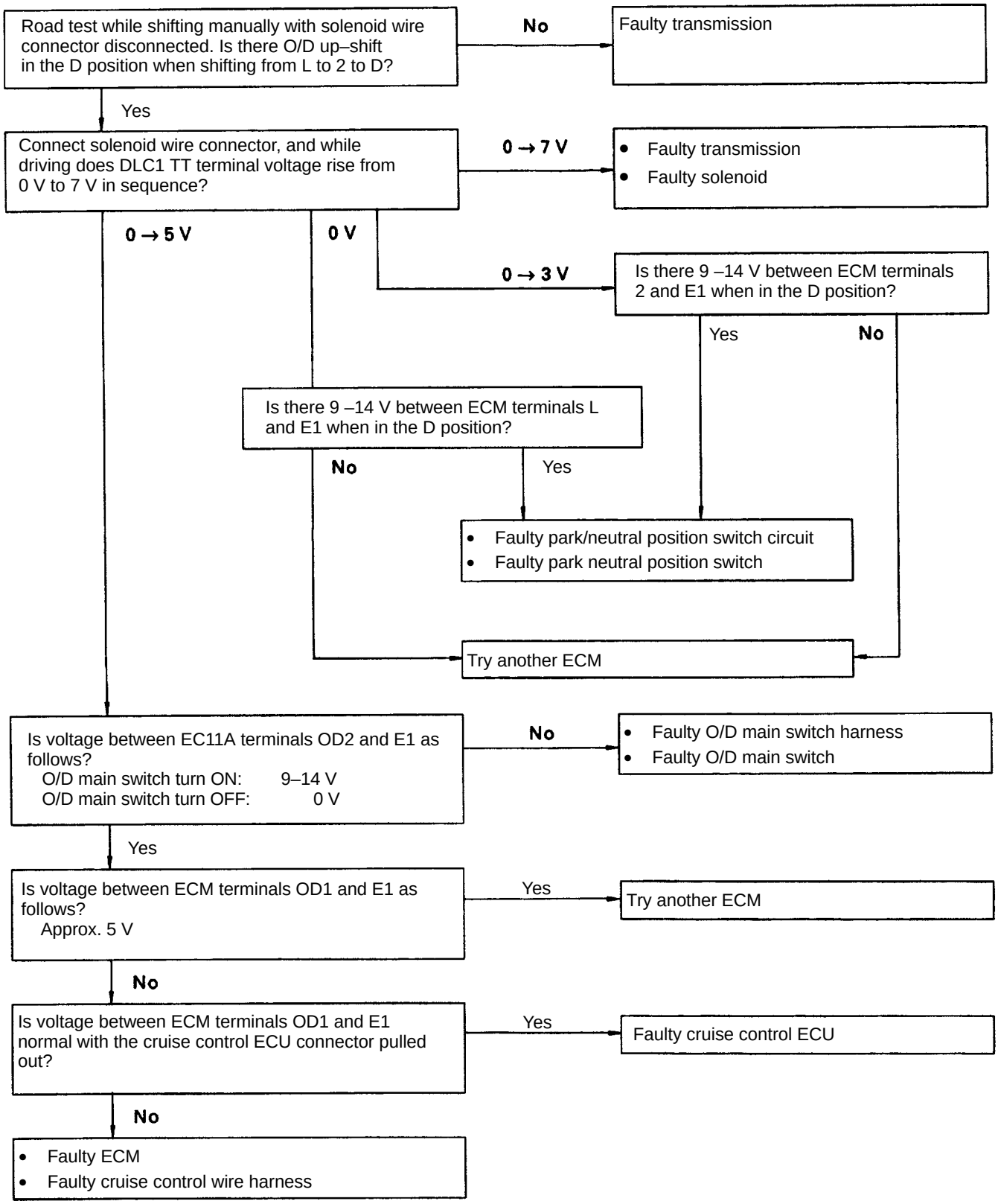

Trouble No.4 No look–up (After warm–up)

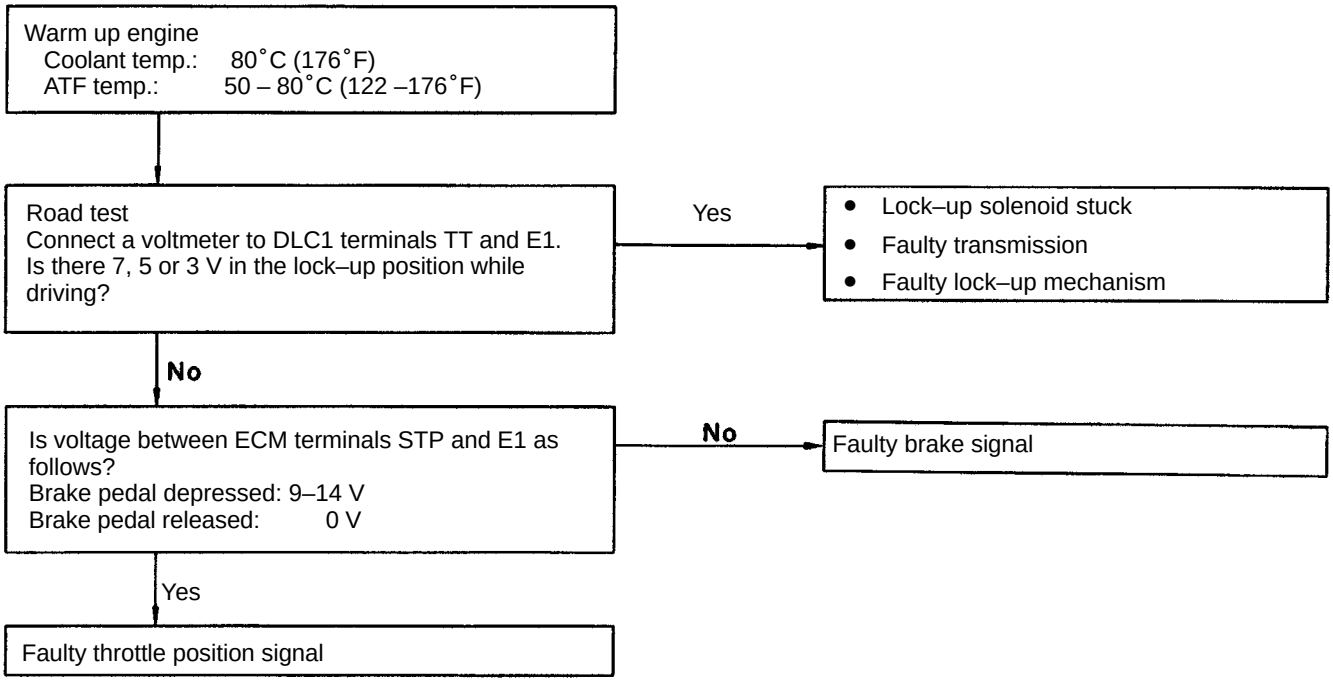

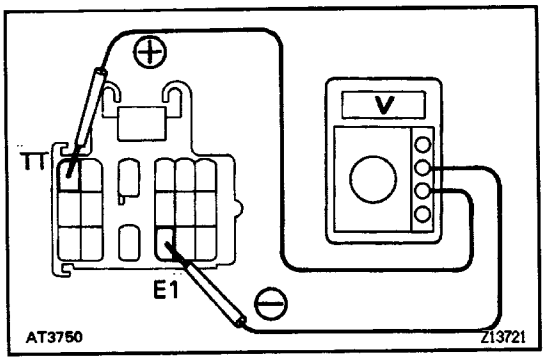

TT TERMINAL VOLTAGE INSPECTION

1. INSPECT THROTTLE POSITION SENSOR SIGNAL

(a) Turn the ignition switch to ON. Do not start the engine.

(b) Connect a voltmeter to DLC1 terminals TT and E1.

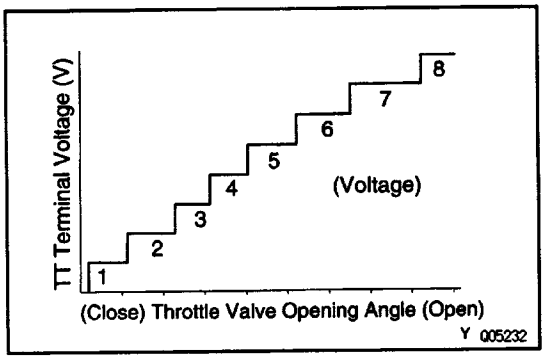

(c) While slowly depressing the accelerator pedal, check that TT terminal voltage rises in sequence.
If the voltage does not change in proportion to the throttle opening angle, there is a malfunction in the throttle position sensor or circuit.

2. INSPECT BRAKE SIGNAL

(a) Depress the accelerator pedal until the TT terminal indicates 8 V.

(b) Depress the brake pedal and check the voltage reading from the TT terminal.
Brake pedal depressed ..... 0 V
Brake pedal released ..... 8 V
If not as indicated, there is a malfunction in either the stop light switch or circuit.

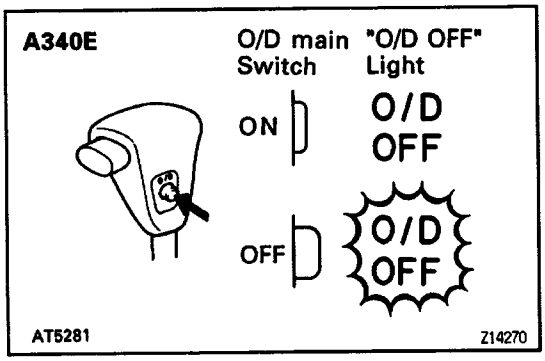

3. INSPECT EACH UP–SHIFT POSITION

(a) Warm up the engine.
Engine coolant temperature:
80° C (176° F)

(b) Turn the O/D main switch to ”ON”.

(c) Place the pattern select switch in ”Normal” and the shift lever into the D position.

(d) During a road test (about 10 km/h, 6 mph) check the voltage at the TT terminal is as indicated below for each up – shift position.
If the voltage rises from 0 V to 7 V in the sequence shown, the control system is okay.
The chart on the left shows the voltmeter reading and corresponding gears.

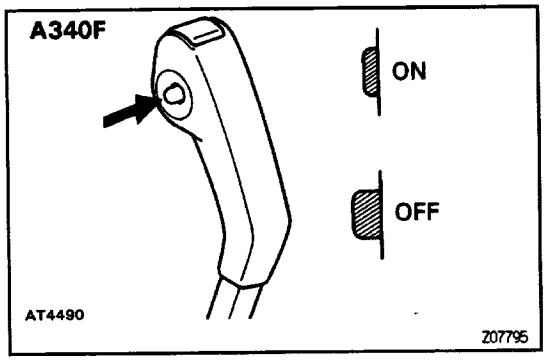

TT Terminal (V)	Gear Position
0	1st
2	2nd
3	2nd Lock-up
4	3rd
5	3rd Lock-up
6	O/D
7	O/D Lock-up

HINT: Determine the gear position by a light shock or change in RPM when shifting. The lock– up clutch will turn ON only infrequently during normal
2nd and 3rd gear operation. To trigger this action, press the accelerator pedal to 50% or more of its stroke. At less than 5096, the voltage may change in the sequence 2 V – 4 V – 6 V – 7 V.

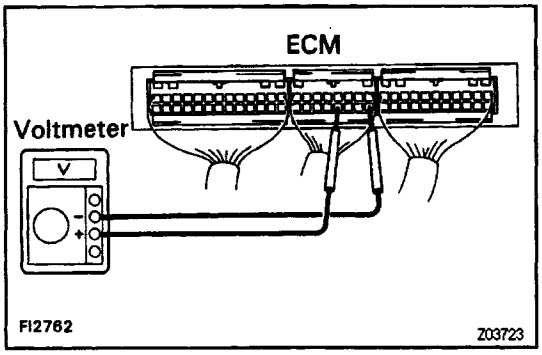

ELECTRONIC CONTROL COMPONENTS INSPECTION

1. INSPECT VOLTAGE OF ECM

(a) Remove the cowl side trim of passenger side.
(b) Turn the ignition switch ON.
(c) Measure the voltage at each terminal.

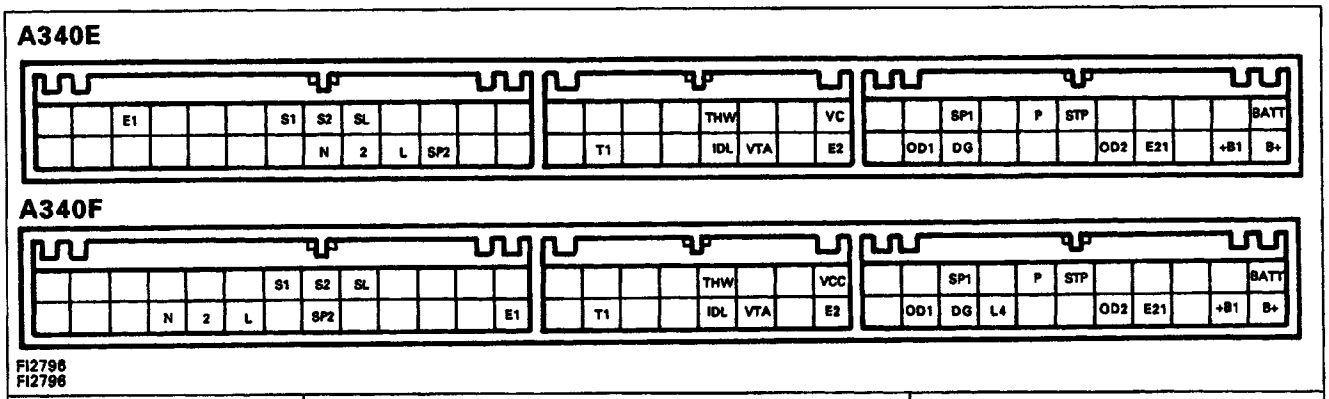

Terminal	Measuring condition		Voltage (V)
S1 – E1			9 – 14
S2, SL – E1			0
P – E1	PWR pattern		9 – 14
	NORM pattern		0 – 2
STP – E1	Brake pedal is depressed		9 – 14
	Brake pedal is released		0
THW – E2 (E21)	Engine coolant temp. 80°C (176°F)		0.1 – 1.0
IDL – E2 (E21)	Throttle valve fully closed		0
	Throttle valve open		9 – 14
VTA – E2 (E21)	Throttle valve fully closed		0.1 – 1.0
	Throttle valve fully open		3 – 5
VC (VCC) – E2 (E21)	—		4 – 6
OD1 – E1			5
OD2 – E1	O/D main switch turned ON		9 – 14
	O/D main switch turned OFF		0
SP1 – E1	Cruise control main switch OFF	Standing still	0 or 5
		Vehicle moving	2 – 3
SP2 – E1	Standing still		0 or 5
	Vehicle moving		2 – 3

Terminal	Measuring condition	Voltage (V)
N – E1	N position	9 – 14
	Except N position	0 – 2
2 – E1	2 position	9 – 14
	Except 2 position	0 – 2
L – E1	L position	9 – 14
	Except L Position	0 – 2
A340F L4 – E1	Transfer shift position H2 or H4	9 – 14
	Transfer shift position L4	0
B + (+B1) – E1	—	9 – 14
BATT – E1		9 – 14

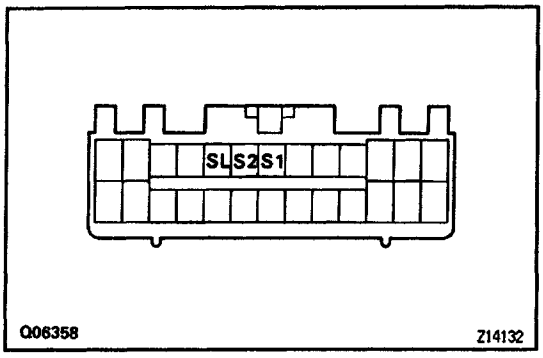

2. INSPECT SOLENOID

(a) Disconnect the connector from ECM.

(b) Measure the resistance between S 1, S 2, SL and ground.

Resistance:

11–15Ω

(c) Apply battery positive voltage to each terminal. Check that an operation noise can be heard from the solenoid.

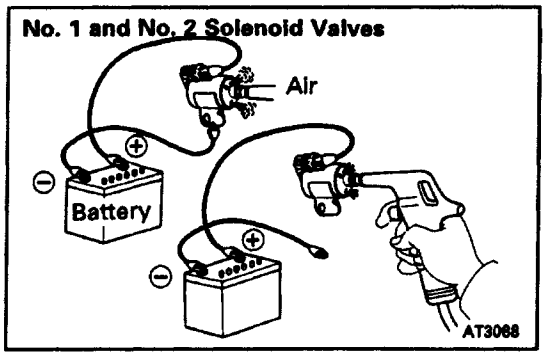

3. CHECK SOLENOID SEALS

If there is foreign material in the solenoid valve, there will be no fluid control even with solenoid operation.

(a) Check No.1 and No.2 solenoid valves.

- Applying 490 kPa (5 kgf/cm2, 71 psi) of compressed air, check that the solenoid valves do not leak.
- When supply battery positive voltage to the solenoids, check that the solenoid valves open.

(b) Check the lock–up solenoid valve.

- Applying 490 kPa (5 kgf/cm2, 71 psi) of cornpressed air, check that the solenoid valve opens.
- When supply battery positive voltage to the solenoid, check that the solenoid valve does not leak the air.

If malfunction is found during voltage inspection (step 1.), inspect the components listed below.

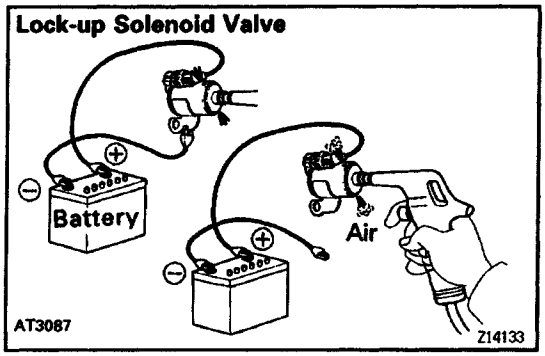

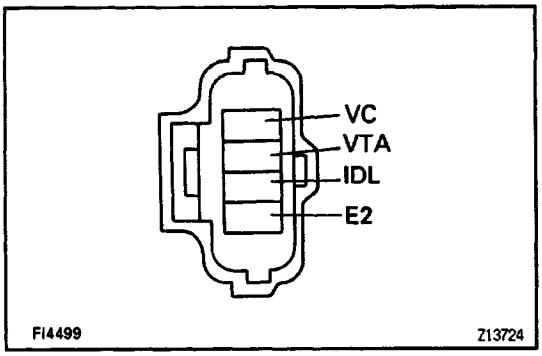

4. INSPECT THROTTLE POSITION SENSOR

Using an ohmmeter, check the resistance between terminals.

Tester condition to terminal	Throttle valve condition	Resistance (kΩ)
IDL – E2	Fully closed	Less than 2.3
IDL – E2	Open	Infinity
VC – E2	–	3.9 – 9.0
VTA – E2	Fully closed	0.47 – 6.1
VTA – E2	Fully opened	3.1 – 12.1

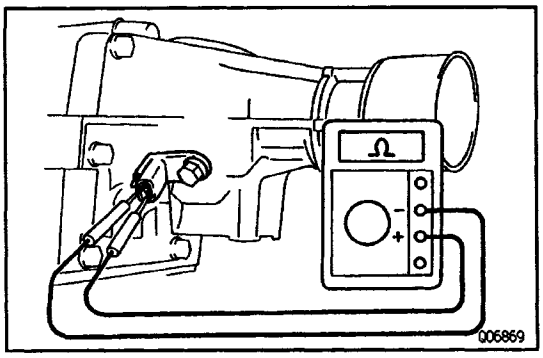

5. INSPECT NO.2 VEHICLE SPEED SENSOR

(a) Jack up the rear wheel on one side.
(b) Connect an ohmmeter between the terminals.
(c) Spin the wheel and check that the meter needle deflects from 0 Ω to ∞ Ω.

6. INSPECT N4.1 VEHICLE SPEED SENSOR

(See page BE–48)

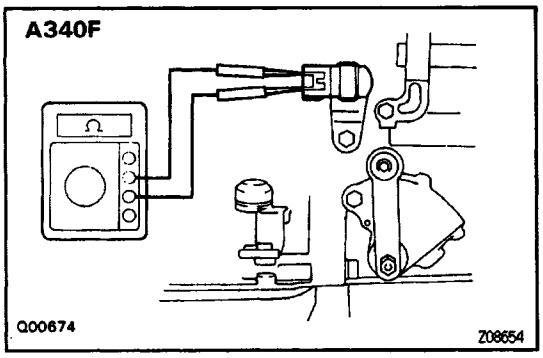

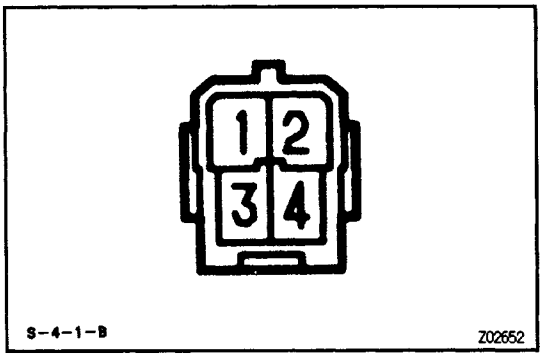

7. INSPECT O/D MAIN SWITCH

Using an ohmmeter, check the continuity of the terminals for each switch position.

Switch position	Tester condition to terminal number	Specified value
ON	–	No continuity
OFF	1 – 3	Continuity

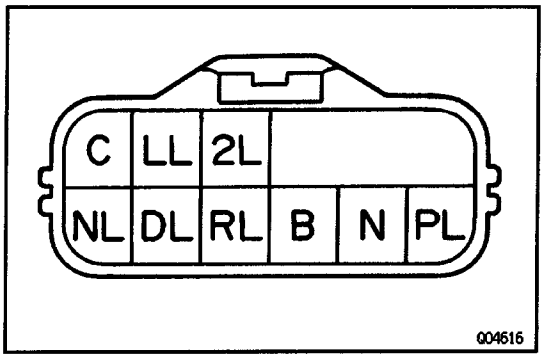

8. INSPECT PARK/NEUTRAL POSITION SWITCH

Check that there is continuity between terminals.

Shift position	Tester condition to terminal	Specified value
P	B – N PL – C	Continuity
R	RL – C	Continuity
N	B – N NL – C	Continuity
D	DL – C	Continuity
2	2L – C	Continuity
L	LL – C	Continuity

9. INSPECT ENGINE COOLANT TEMPERATURE SENSOR

22R–E:

(See page EG1–194)

3VZ–E:

(See page EG2–246)

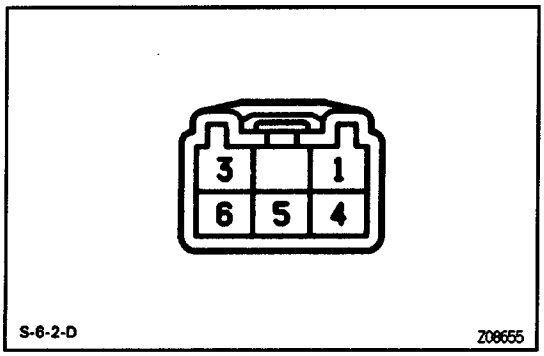

10. INSPECT PATTERN SELECT SWITCH

Using an ohmmeter, check the continuity of terminals for each switch position.

HINT: As there are diodes inside, be careful of the tester prove polarity.

Switch position	Tester condition to terminal number	Specified value
PWR	4 – 6	Continuity
NORM	, –	No continuity

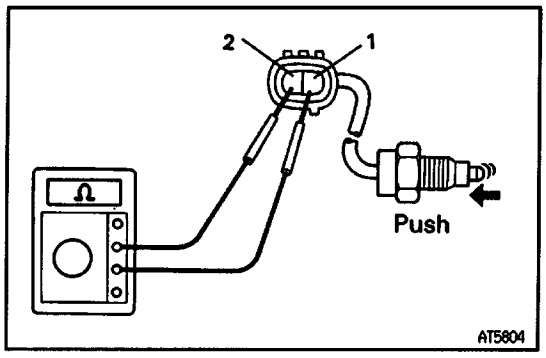

11. A340F:

INSPECT TRANSFER POSITION SWITCH

Check that there is continuity between each terminal, as shown.

Switch position	Specified value
Push	Continuity
Free	No continuity

If operation is not as specified, replace the switch.

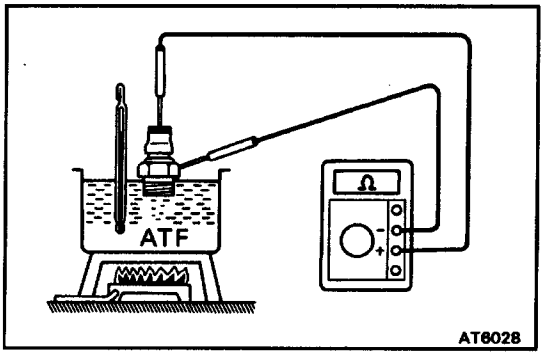

12. A340F:

INSPECT TRANSMISSION FLUID TEMPERATURE SWITCH

Check that there is continuity at the temperature of 145–155°C (325–343°F).

If continuity is not as specified, replace the switch.

STALL TEST

The objective of this test is to check the overall performance of the transmission and engine by measuring the stall speeds in the D and R positions.

NOTICE:

- **Do the test at normal operating fluid temperature 50–80˚C (122–176˚F).**
- **Do not continuously run this test longer than 5 seconds.**
- **To ensure safety, conduct this test in a wide, clear, level area, which provides good traction.**
- **The stall test should always be carried out in pairs. One should observe the conditions of wheels or wheel stoppers outside the vehicle while the other I: doing the test.**

MEASURE STALL SPEED

(a) Chock the front and rear wheels.
(b) Connect a tachometer to the engine.
(c) Fully apply the parking brake.
(d) Keep your left foot pressed firmly on the brake pedal.
(e) Start the engine.
(f) Shift into the D position. Step all the way down on the accelerator pedal with your right foot.

Quickly read the stall speed at this time.

NOTICE: Release the accelerator pedal and stop test if the rear wheels begin to rotate before the engine speed reaches specified stall speed.

Stall speed:

A340E – 2,450 t 150 rpm

A340F – 2,200 t 150 rpm

(g) Do the same test in R position.

EVALUATION

(a) If the stall speed is the same for both positions but lower than specified value:

- Engine output may be insufficient
- Stator one–way clutch is not operating properly

HINT: If more than 600 rpm below the specified value, the torque converter clutch could be faulty.

(b) If the stall speed in D position is higher than specified:

- Line pressure too low
- Forward clutch slipping
- No.2 one–way clutch not operating properly
- 0/D one–way clutch not operating properly

(c) If the stall speed in R position is higher than specified:

- Line pressure too low
- Direct clutch slipping
  First and reverse brake slipping
- 0/D one–way clutch not operating properly

(d) If the stall speed in both R and D positions are higher than specified:

- Line pressure too low
- Improper fluid level
- O/D one–way clutch not operating properly

STALL TEST

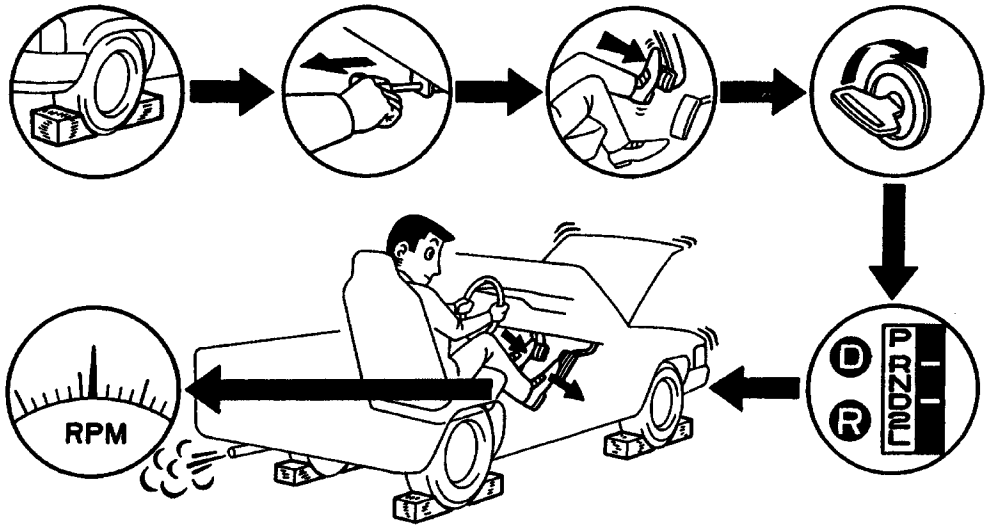

TIME LAG TEST

When the shift lever is shifted while the engine is idling, there will be a certain time lapse or lag before the shock can be felt. This is used for checking the condition of the 0/D direct clutch, forward clutch, direct clutch and first and reverse brake.

NOTICE:

- **Do the test at normal operating fluid temperature 50–80˚C (122–176˚F).**
- **Be sure to allow one minute Interval between tests.**
- **Make 3 measurements and take the average value.**

MEASURE TIME LAG

(a) Fully apply the parking brake.

(b) Start the engine and check the idle speed.

Idle speed (N position and air conditioner OFF):

A340E – 800 ± 50 rpm

A340F – 750 ± 50 rpm

(c) Shift the shift lever from N to D position. Using a stop watch, measure the time it takes from shifting the lever until the shock is felt.

Time lag:

Less than 1.2 seconds

(d) In same manner, measure the time lag for N→R.

Time lag:

Less than 1.5 seconds

EVALUATION

(a) If N → D time lag is longer than specified:

- Line pressure too low
- Forward clutch worn
- O/D one–way clutch not operating properly

(b) If N → R time lag is longer than specified:

- Line pressure too low
- Direct clutch worn
- First and reverse brake worn
- O/D one–way clutch not operating properly

TIME LAG TEST

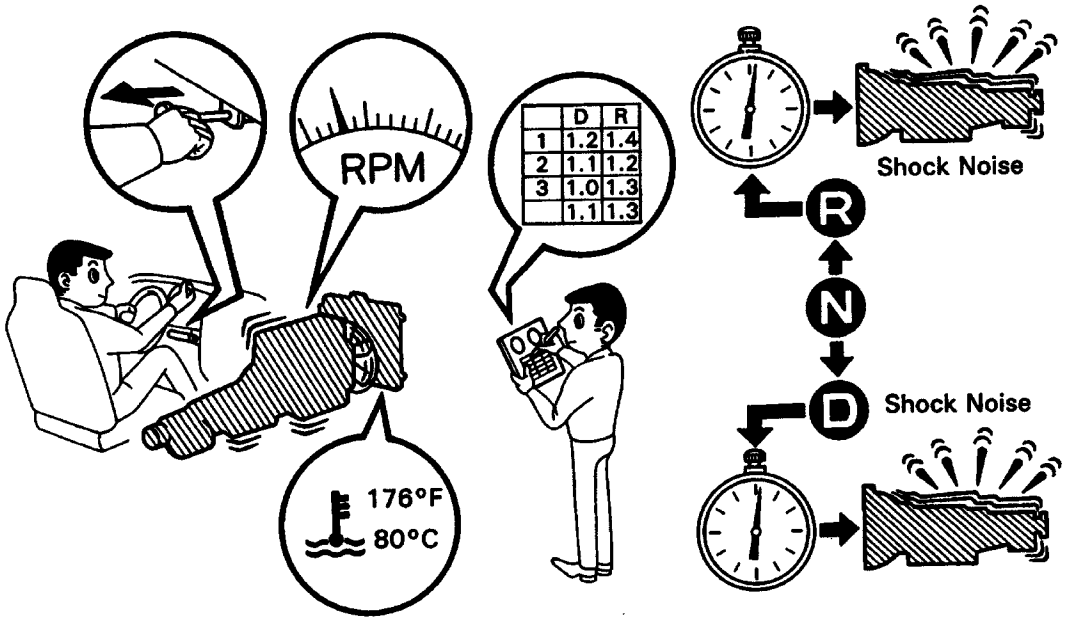

HYDRAULIC TEST

PREPARATION

(a) Warm up the transmission fluid.

(b) Remove the transmission case test plug and connect the hydraulic pressure gauge.

SST 09992–00094

NOTICE:

- **Do the test at normal operating fluid temperature 50–80°C (122–176°F).**
- **The line pressure test should always be carried out in pairs. One should observe the conditions of wheels or wheel stoppers outside the vehicle while the other Is doing the test.**

MEASURE LINE PRESSURE

(a) Fully apply the parking brake and chock the 4 wheels.

(b) Start the engine and check idling speed.

(c) Keep your left foot pressed firmly on the brake pedal and shift into D position.

(d) Measure the line pressure when the engine is idling.

(e) Press the accelerator pedal all the way down. Quickly read the highest line pressure when engine speed reaches stall speed.

NOTICE: Release the accelerator pedal and atop test if the rear wheels begin to rotate before the engine speed reaches specified stall speed.

(f) In the same manner, do the test in R position.

Line pressure kPa (kgf/cm2, psi)	D position	R position
Idling	**363–422 (3.7–4.3, 53–61)**	**490–588 (5.0–6.0, 71–85)**
Stall	**932–1,177 (9.5–12.0, 135–171)**	**1,294–1,638 (13.2–16.7, 188–238)**

If the measured pressures are not up to specified values, recheck the throttle cable adjustment and do a retest.

EVALUATION

(a) If the measured values at all positions are higher than specified:

- Throttle cable out of adjustment
- Throttle valve defective
- Regulator valve defective

(b) If the measured values at all positions are lower than specified:

- Throttle cable out of adjustment
- Throttle valve defective
- Regulator valve defective
- Oil pump defective
- O/D direct clutch defective

(c) If pressure is low in the D position only:

- D position circuit fluid leakage
- Forward clutch defective

(d) If pressure is low in the R position only:

- R position circuit fluid leakage
- Direct clutch defective
- First and reverse brake defective

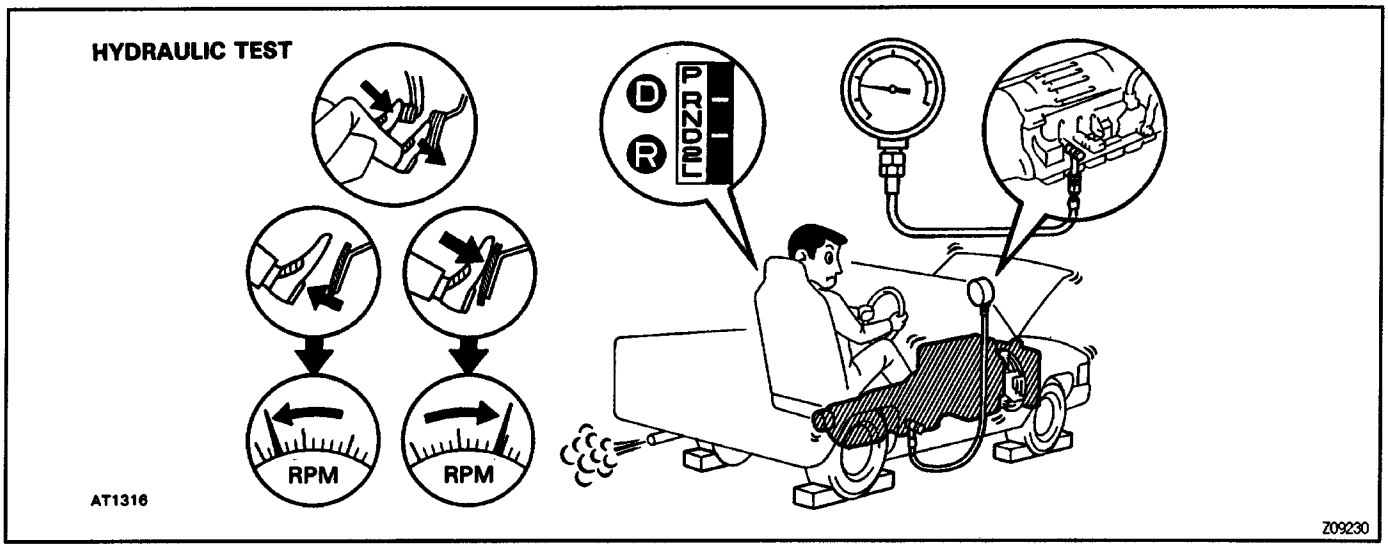

ROAD TEST

NOTICE: Do this test at normal operating fluid temperature 50 – 80˚C (122 –176˚F).

1. D POSITION TEST IN NORM AND PWR PATTERN POSITION

Shift into the D position and hold the accelerator pedal constant at the full throttle valve opening position.

Check the following:

Conduct a test under both Normal and Power pattern.

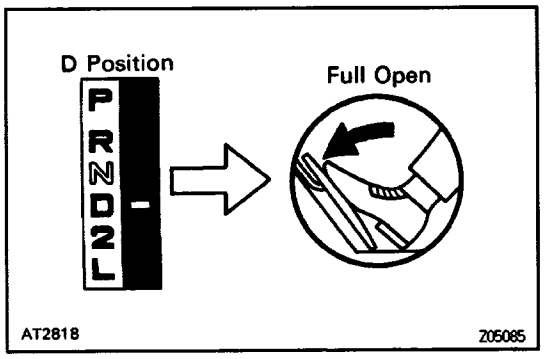

(a) 1 –2, 2–3 and 3–0/D up–shifts should take place, and shift points should conform to those shown in the automatic shift schedule.

HINT: There is no O/D up–shift or lock–up when the coolant temperature is below60˚C (140˚F).

EVALUATION

(1) If there is no 1→2 up–shift:
- No.2 solenoid is stuck.
- 1 – 2 shift valve is stuck.

(2) If there is no 2→3 up–shift:
- No.1 solenoid is stuck.
- 2–3 shift valve is stuck.

(3) If there is no 3→O/D up–shift:
- 3–4 shift valve is stuck.

(4) If the shift point is defective:
- Throttle valve, 1– 2 shift valve, 2–3 shift valve,
- 3–4 shift valve etc., are defective.

(5) If the lock–up is defective:
- Lock–up solenoid is stuck.
- Lock–up relay valve is stuck.

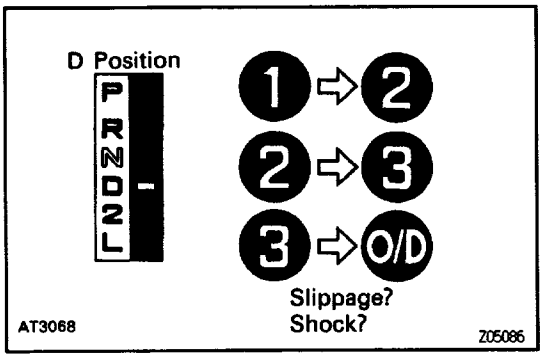

(b) In the same manner, check the shock and slip at the 1 →2 , 2→3, and 3→O/D up–shifts.

EVALUATION

If the shock is excessive:
- Line pressure is too high.
- Accumulator is defective.
- Check ball is defective.

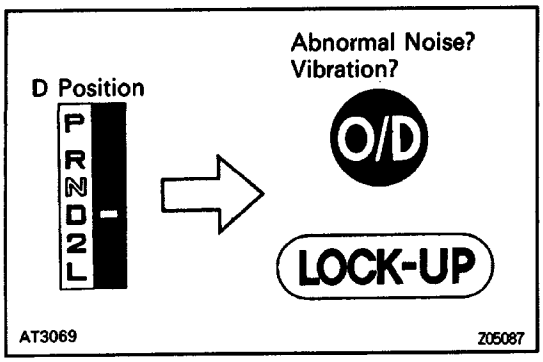

(c) Run at the D position lock–up or O/D gear and check for abnormal noise and vibration.
HINT: The check for the cause of abnormal noise and vibration must be made with extreme care as it could also be due to loss of balance in the propeller shaft, differential, torque converter clutch, etc.

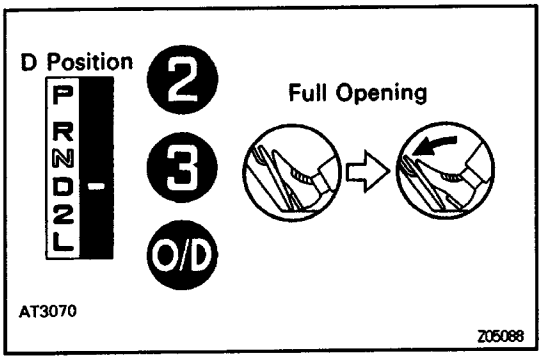

(d) While running in the D position, 2nd, 3rd and O/D gears, check to see that the possible kick–down vehicle speed limits for 2→1, 3→2 and O/D→3 kick downs conform to those indicated on the automatic shift schedule.
(e) Check for abnormal shock and slip at kick–down.

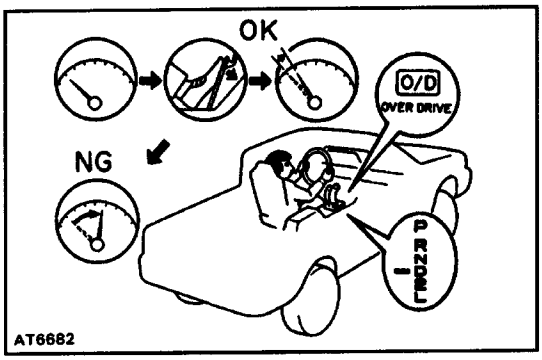

(f) Check for the lock– up mechanism.
(1) Drive in D position, O/D gear, at a steady speed (lock–up ON) of about 75 km/h (47 mph).
(2) Lightly depress the accelerator pedal and check that the engine RPM does not change abruptly.
If there is a big jump in engine RPM, there is no lock–up.

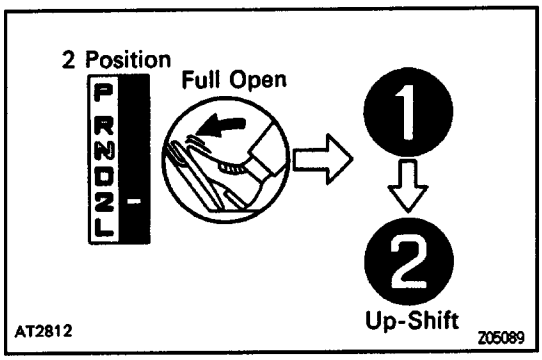

2. 2 POSITION TEST

Shift into the 2 position and, while driving with the accelerator pedal held constantly at the full throttle valve opening position, push in one of the pattern selectors and check on the following points.

(a) Check to see that the 1–2 up–shift takes place and that the shift point conforms to that shown on the automatic shift schedule.
HINT:

- There is no O/D up–shift and lock–up in the 2 position.
- To prevent overrun, the transmission up–shifts into 3rd gear at around 100 km/h (62 mph) or more.

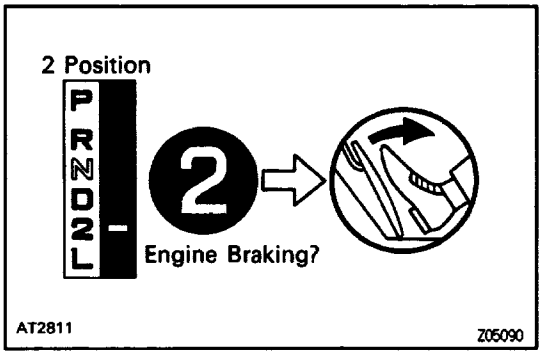

(b) While running in the 2 position and 2nd gear, release the accelerator pedal and check the engine braking effect.

EVALUATION

If there is no engine braking effect:

- Second coast brake is defective.

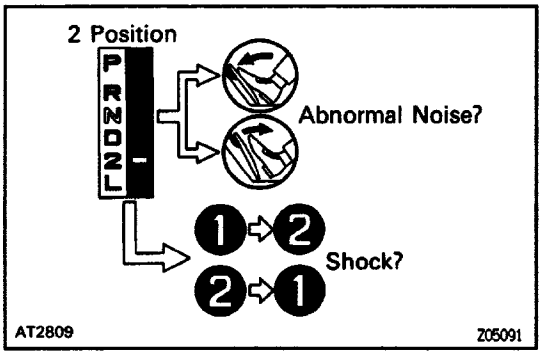

(c) Check for abnormal noise during acceleration and deceleration, and for shock at up–shift and down–shift.

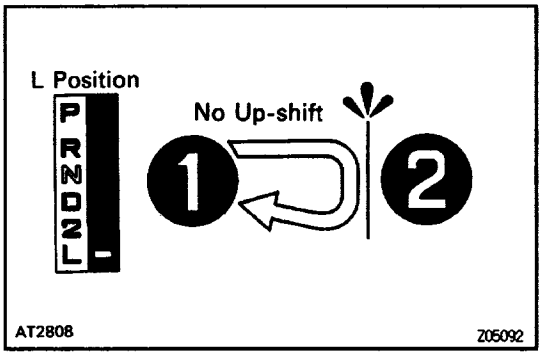

3. L POSITION TEST

(a) While running in the L position, check to see that there is no up–shift to 2nd gear.

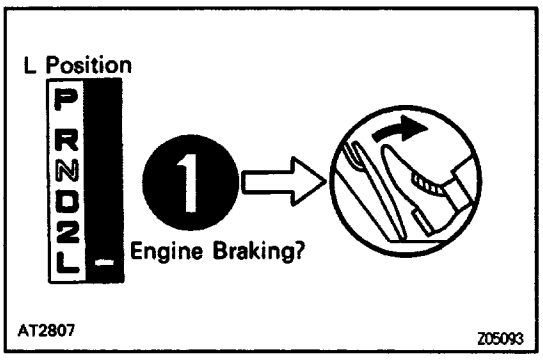

(b) While running in the L position, release the accelerator pedal and check the engine braking effect.

EVALUATION

If there is no engine braking effect:

- First and reverse brake is defective.

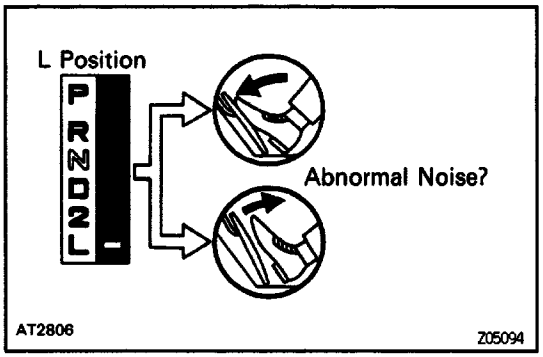

(c) Check for abnormal noise during acceleration and deceleration.

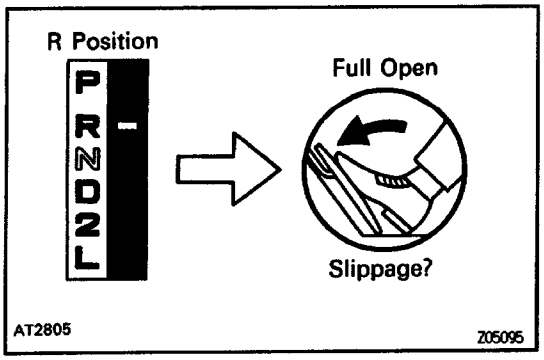

4. R POSITION TEST

Shift into the R position and, while starting at full throttle, check for slipping.

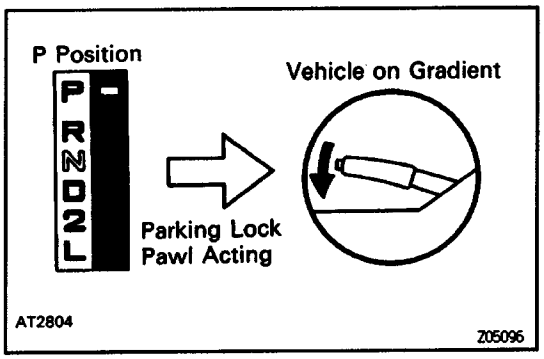

5. P POSITION TEST

Stop the vehicle on a gradient (more than 5˚) and after shifting into the P position, release the parking brake. Then check to see that the parking lock pawl holds the vehicle in place.

AUTOMATIC SHIFT SCHEDULE

A340E:

SHIFT POINT

Shift position	Shifting point		Vehicle speed km/h (mph)
D (NORM)	Throttle valve fully opened	1→2	58–62 (36–39)
		2→3	103–111 (64–69)
		3→O/D	143–151 (89–94)
		O/D→3	136–144 (85–90)
		3→2	95–99 (59–62)
		2→1	46–49 (28–30)
	Throttle valve fully closed	3→O/D	41–46 (25–29)
		O/D→3	25–29 (16–18)
D (PWR)	Throttle valve fully opened	1→2	58–62 (36–39)
		2→3	113–120 (70–75)
		3→O/D	147–154 (91–96)
		O/D→3	140–149 (87–93)
		3→2	105–112 (65–70)
		2→1	45–49 (28–30)
	Throttle valve fully closed	3→O/D	45–49 (28–30)
		O/D→3	25–29 (16–18)
2 (NORM and PWR)	Throttle valve fully opened	1→2	50–54 (31–34)
		2→3	120–127 (75–79)
		3→2	113–121 (70–75)
		2→1	45–49 (28–30)
L (NORM and PWR)	Throttle valve fully opened	3→2	96–104 (60–65)
		2→1	55–59 (34–37)

LOCK–UP POINT

D position Throttle valve opening 5%	Lock–up ON km/h (mph)	Lock–up OFF km/h (mph)
*3rd Gear (NORM)	75–79 (47–49)	68–72 (42–45)
*3rd Gear (PWR)	65–69 (40–43)	58–62 (36–39)
O/D Gear (NORM)	75–79 (47–49)	65–69 (40–43)
O/D Gear (PWR)	75–79 (47–49)	68–72 (42–45)

* : O/D main switch OFF

A340F:

SHIFT POINT

Shift position	Shifting point		Vehicle speed km/h (mph)
D (NORM)	Throttle valve fully opened	1→2	44–48 (27–30)
		2→3	93–99 (58–61)
		3→O/D	134–141 (83–87)
		O/D→3	128–135 (79–84)
		3→2	87–94 (54–58)
		2→1	40–43 (25–27)
	Throttle valve fully closed	3→O/D	35–39 (22–24)
		O/D→3	21–25 (13–16)
D (PWR)	Throttle valve fully opened	1→2	47–51 (29–32)
		2→3	93–99 (58–61)
		3→O/D	148–155 (92–96)
		O/D→3	143–149 (89–92)
		3→2	87–94 (54–58)
		2→1	41–45 (25–28)
	Throttle valve fully closed	3→O/D	50–53 (31–33)
		O/D→3	21–25 (13–16)
2 (NORM and PWR)	Throttle valve fully opened	1→2	43–46 (27–29)
		2→3	103–109 (64–68)
		3→2	97–103 (60–64)
		2→1	38–42 (24–26)
L (NORM and PWR)	Throttle valve fully opened	3→2	82–89 (51–55)
		2→1	47–51 (29–32)

LOCK– UP POINT

D position Throttle valve opening 5%	Lock–up ON km/h (mph)	Lock –up OFF km/h (mph)
*3rd Gear (NORM)	41–45 (25–28)	38–42 (24–26)
*3rd Gear (PWR)	55–59 (34–37)	50–53 (31–33)
O/D Gear (NORM)	59–63 (37–39)	55–59 (34–37)
O/D Gear (PWR)	75–79 (47–49)	70–73 (43–45)

* : O/D main switch OFF

HINT:

(1) Lock–up will occur in 2nd gears unless the throttle valve opening is greater than 50%.

(2) There is no lock–up in the 2 and L positions.

(3) In the following cases, the lock–up will be released regardless of the lock–up pattern.

- When the throttle is completely closed.
- When the stop light switch is ON.

TROUBLESHOOTING MATRIX CHART

Use the table below to help you find the cause of the problem. The numbers indicate the priority of the likely cause of the problem. Check each part in order. If necessary, replace these parts.

ON–VEHICLE

See page / Parts name / Trouble		AT1–74 Parking lock pawl	★ Low coast modulator valve	★ 1 – 2 Shift valve	★ 2 – 3 Shift valve	★ 2nd coast modulator valve	★ Accumulator control valve	★ Throttle valve	★ Lock–up relay valve	★ Primary regulator valve	★ No.1 solenoid	★ No.2 solenoid	★ Lock–up solenoid	★ Co accumulator	★ C2 accumulator	★ B2 accumulator	★ B2 accumulator	★ Manual valve	★ 3–4Shift valve	AT1–38 ECM
Does not move in any forward gear																				
Does not move i n reverse position																				
Does not move in any forward position or reverse position		4		.				3		1								2		
No up–shift	1st → 2nd			1							2	3								
	2nd → 3rd				1						2	3								
	3rd → O/D										2	3							1	
No down–shift	O/D → 3rd											2							1	
	3rd → 2nd				1						2									
	2nd → 1st			1								2								
Shift point too high or too low																				1
Up-shift 3rd → O/D with O/D main switch OFF																				1
Harsh engagement	"N" → "R"														2					
	"N" → "D"																			
	"N" → "L"		1																	
	1st → 2nd ("D" position)						2										3			
	1st → 2nd ("2" position)						2										3			
	1st → 2nd → 3rd → O/D							1		2										
	2nd → 3rd						2								3					
	3rd → O/D						2									3				
	O/D → 3rd													2						
	3rd → 2nd														2					
Slip	Forward & Reverse									1										
	"R" position																			
	1st																			
	2nd																			
	3rd																			
	O/D																			
No engine braking	1st ("L" position)		1																	
	2nd ("2" position)					1														
No kick–down				1	1						2	2							1	
Poor acceleration										2										
No lock–up									2				1							

★ : Refer to A340E, A340F, A340H Automatic Transmission Repair Manual. (Pub. No. RM391 U)

OFF–VEHICLE

See page / Parts name / Trouble		AT1–74	★	★	★	★	★	★	★	★	★	★	★	★	★	★
		Torque converter clutch	Oil pump	O/D brake (Bo)	Second coast brakerB,1	Second brake (B2)	First and reverse brake (BO	O/D direct clutchrCo)	Forward clutch (CI)	Direct clutch (C2)	O/D one–way clutch (FO)	No. 1 one–way clutch (FI)	No. 2 one–way clutch (F2)	Front planetary gear	Rear planetary gear
Does not move in an forward position									1						
Does not move in reverse position							2			1					
Does not move in any forward position reverse position		1	2								5			3	4
No up–shift	1st → 2nd					1						2			
	2nd → 3rd									1					
	3rd → O/D			1											
No down–shift	O/D → 3rd									1					
	3rd → 2nd					1						2			
	2nd → 1st												1		
Harsh engagement	''N'' → ''R''						2			1					
	''N'' → ''D''								1						
	''N'' → ''L''						1								
	1st → 2nd (''D'' position)					1						1			
	1st → 2nd (''2'' position)				1	2						3			
	2nd → 3rd									1					
	3rd → O/D			1											
	O/D → 3rd							1							
	3rd → 2nd									1					
Slip	Forward & Reverse	1	2								3				
	''R'' position						2			1	3				
	1st								1				2		
	2nd					1						2			
	3rd									1					
	O/D			1											
No engine braking	1st (''L'' position)						1								
	2nd (''2'' position)				1										
Poor acceleration		1	2												
No lock–up		1													

★ : Refer to A340E, A340F, A340H Automatic Transmission Repair Manual. (Pub. No. RM391 U)

VALVE BODY

VALVE BODY REMOVAL

1. CLEAN TRANSMISSION EXTERIOR

To prevent contamination, clean the exterior of the transmission.

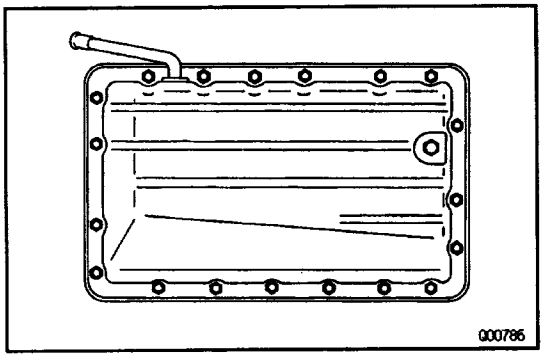

2. DRAIN TRANSMISSION FLUID

Remove the drain plug and the fluid into a suitable container.

3. REMOVE OIL PAN

NOTICE: Some fluid will remain in the oil pan. Be careful not to damage the filler pips and O–ring.

(a) Remove the 19 bolts.

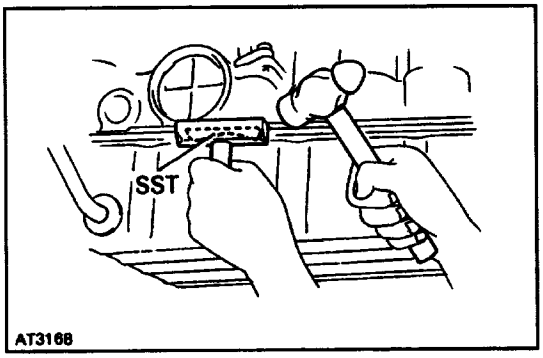

(b) Install the blade of SST between the transmission case and oil pan, cut off applied sealer and then remove the oil pan.
SST 09032 – 00100

NOTICE: When removing the oil pan, be careful not to damage the oil pan flange.

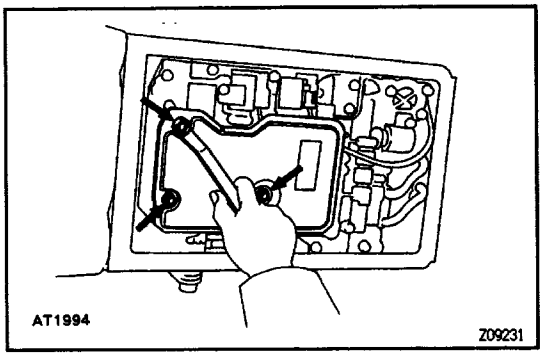

4. A340E:

REMOVE OIL STRAINER

Remove the 6 bolts, and the oil strainer.

NOTICE: Be careful as some oil will come out with the filter.

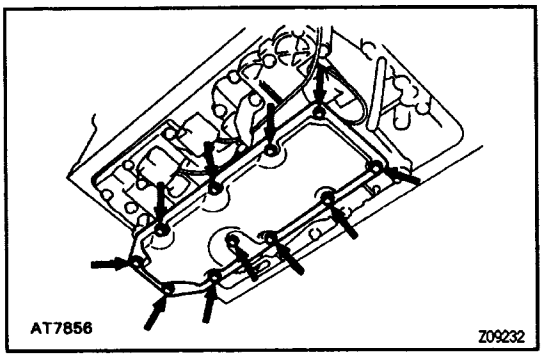

5. A340F:

REMOVE OIL STRAINER AND GASKETS

(a) Remove the 11 bolts holding the oil strainer to the oil strainer case.
(b) Remove the oil strainer and gasket.

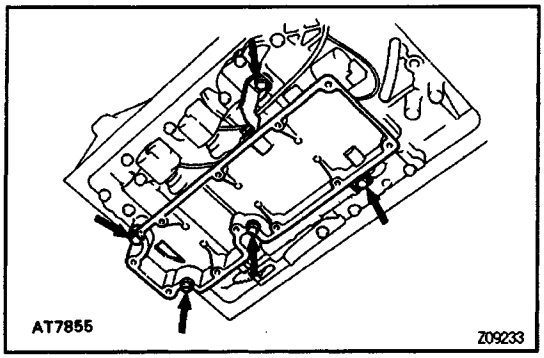

(c) Remove the 5 bolts and oil strainer case.
(d) Remove the 2 gaskets from the case.

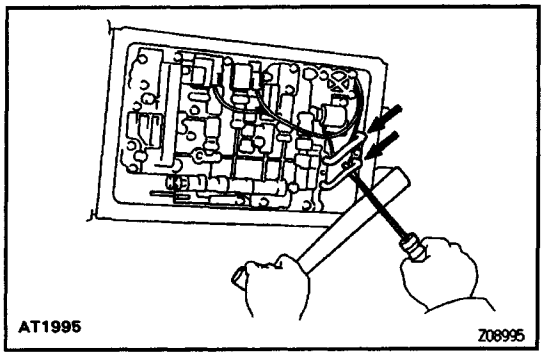

6. A340E:

REMOVE OIL PIPES

Pry up both pipe ends with a large screwdriver and remove the pipes.

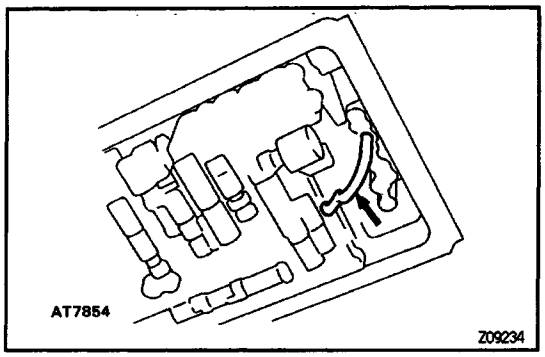

7. A340 F:

REMOVE OIL PIPES

Pry up both pipe ends with a large screwdriver and remove the pipes.

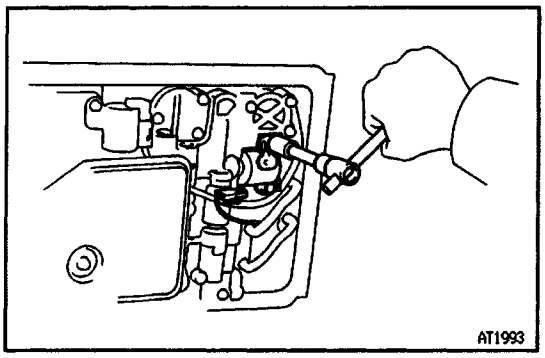

8. WHEN REPLACING SOLENOIDS

(a) Disconnect the connectors from the solenoids.
(b) Remove the solenoid mounting bolts.
(c) Remove the solenoids.

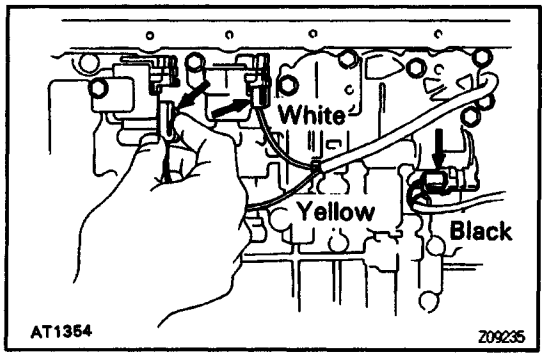

9. DISCONNECT SOLENOID CONNECTORS

Disconnect the 3 connectors from No.1, No.2 and lock –up solenoids.

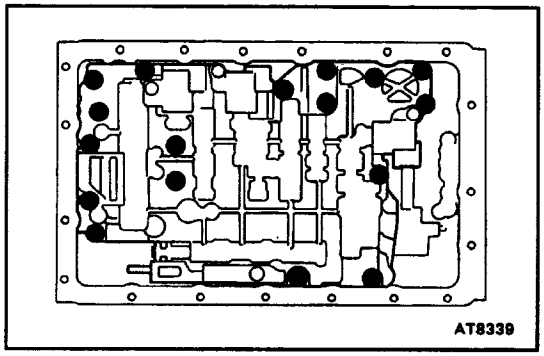

10. REMOVE VALVE BODY

(a) A340E:

Remove the 17 bolts.

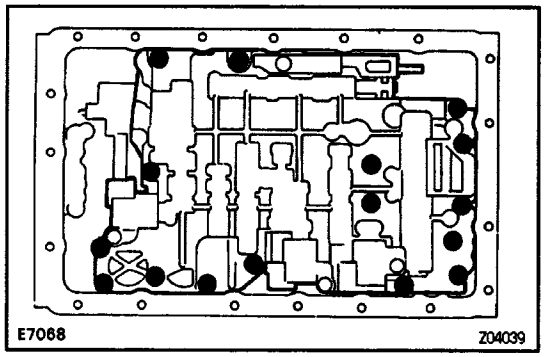

(b) A340F:

Remove the 16 bolts.

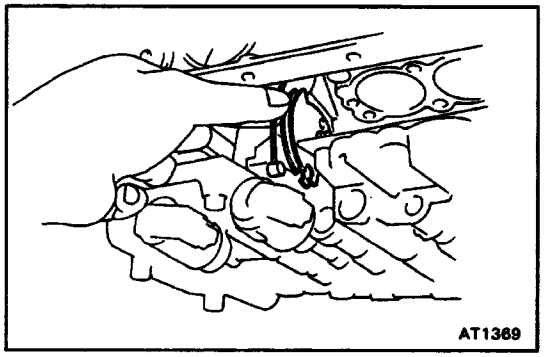

(c) Disconnect the throttle cable from the cam and remove the valve body.

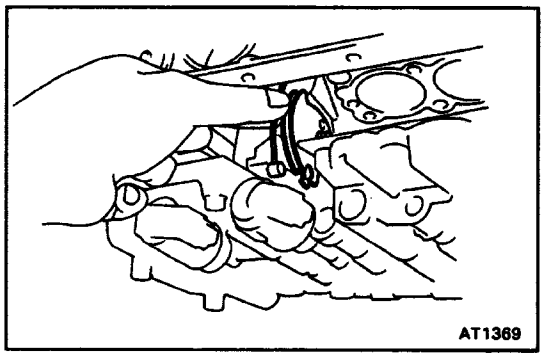

VALVE BODY INSTALLATION

1. CONNECT THROTTLE CABLE TO CAM

Push the cable fitting into the cam.

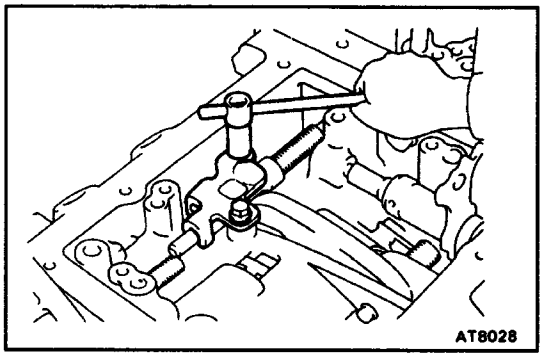

2. INSTALL VALVE BODY

(a) Align the manual valve lever with the manual valve.

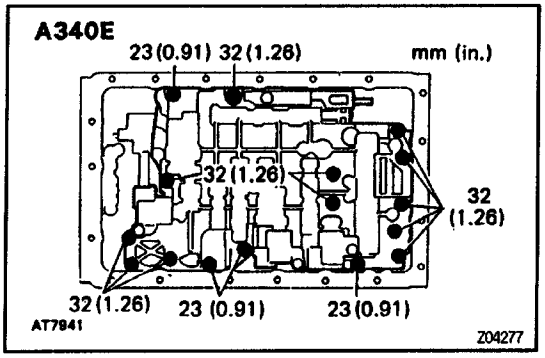

(b) Finger tighten all the bolts first. Then tighten the bolts evenly.

Torque: 10 N–m (100 kgf–cm, 7 ft–lbf)

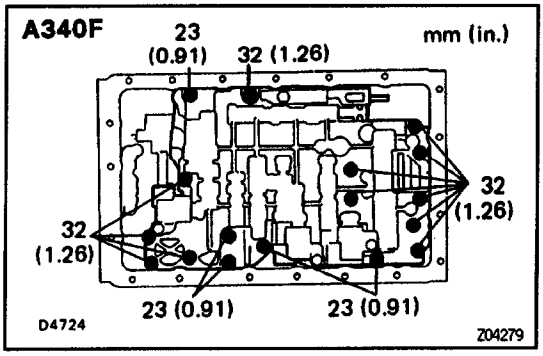

3. CONNECT SOLENOID WIRING

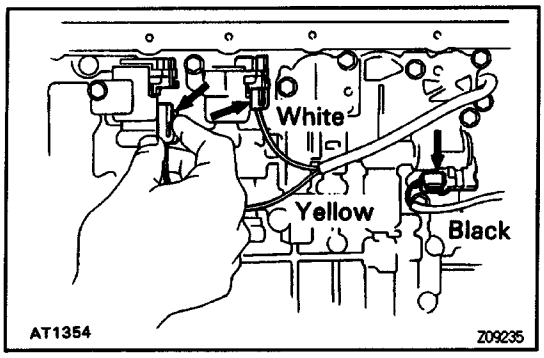

4. A340E:

INSTALL OIL PIPES

Tap the pipes with a plastic hammer to install them into the positions, as shown.

NOTICE: Be careful not to bend or damage the pipes.

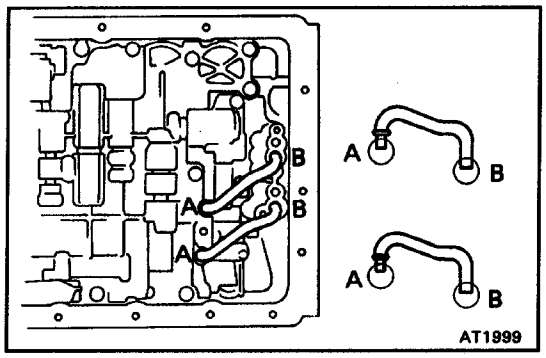

5. A340 F:

INSTALL OIL PIPE

Tap the pipes with a plastic hammer to install the pipe into the position, as shown.

NOTICE: Be careful not to bend or damage the pipe.

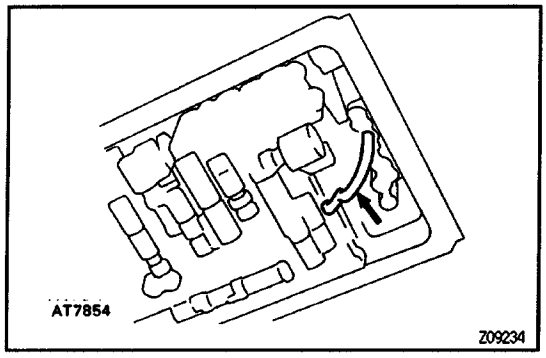

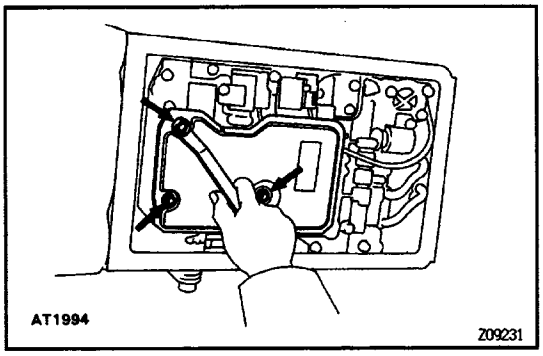

6. A340 E:

INSTALL OIL STRAINER

Be sure the screen is clean. Torque the bolts.

Torque: 5.4 N–m (55 kgf–cm, 48 in–lbf)

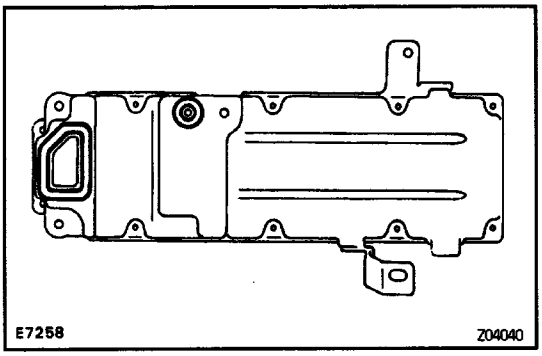

7. A340F:

INSTALL OIL STRAINER AND GASKETS

(a) Install 2 new gaskets to the oil strainer case.

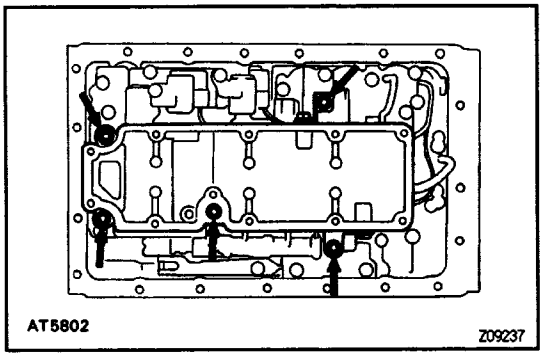

(b) Install the oil strainer case and torque the 5 bolts.

Torque: 10 N–m (100 kgf–cm. 7 ft–lbf)

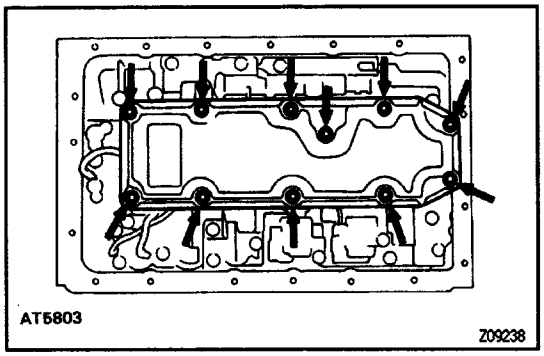

(c) Install a new gasket to the oil strainer case.

(d) Install the oil strainer and torque the 11 bolts.

Torque: 6.9 N–m (70 kgf–cm, 61 in.–lbf)

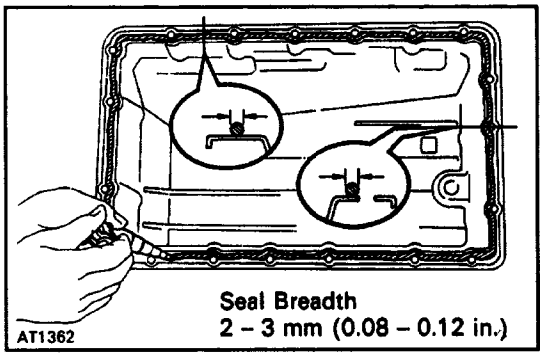

8. INSTALL OIL PAN

(a) Remove any packing material and be careful not to drop oil on the contacting surfaces of the transmission case and oil pan.

(b) Apply FIPG to the oil pan shown in the illustration.

FIPG:

Part No. 08826–00090, THREE BOND 1281 or equivalent

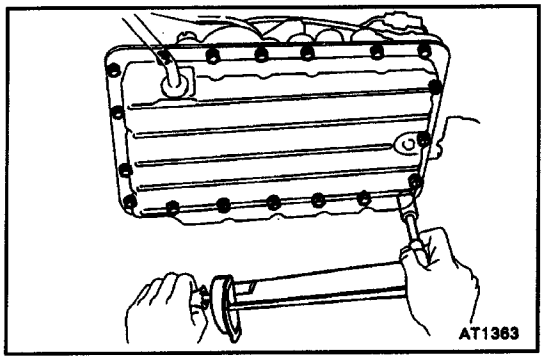

(c) install and torque the 19 bolts.

Torque: 7.4 N–m (75 kgf–cm, 65 in.–lbf)

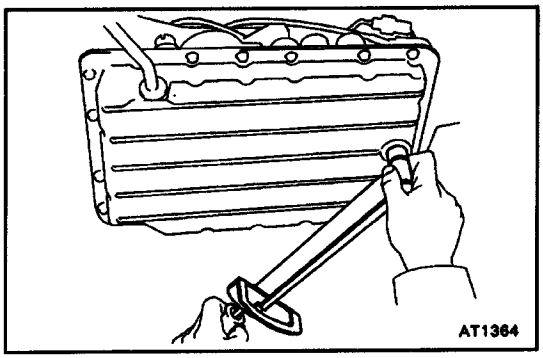

9. INSTALL DRAIN PLUG

Torque the drain plug.

Torque: 20 N–m (205 kgf–cm, 15 ft–lbf)

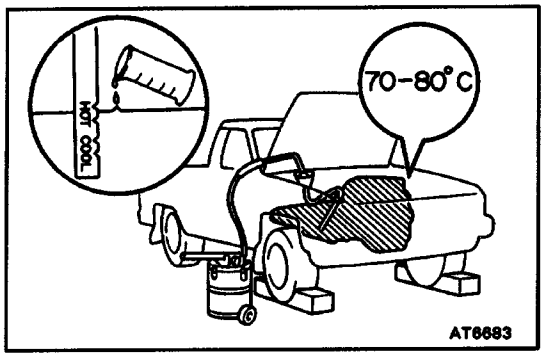

10. FILL TRANSMISSION WITH ATF

Add only about 2 liters of ATF. Start the engine and shift through all the positions. Check the fluid level and add as necessary.

NOTICE: Do not overfill.

Fluid type:

ATF DEXRON® II

ASSEMBLY REMOVAL AND INSTALLATION

Remove and install the parts, as shown.

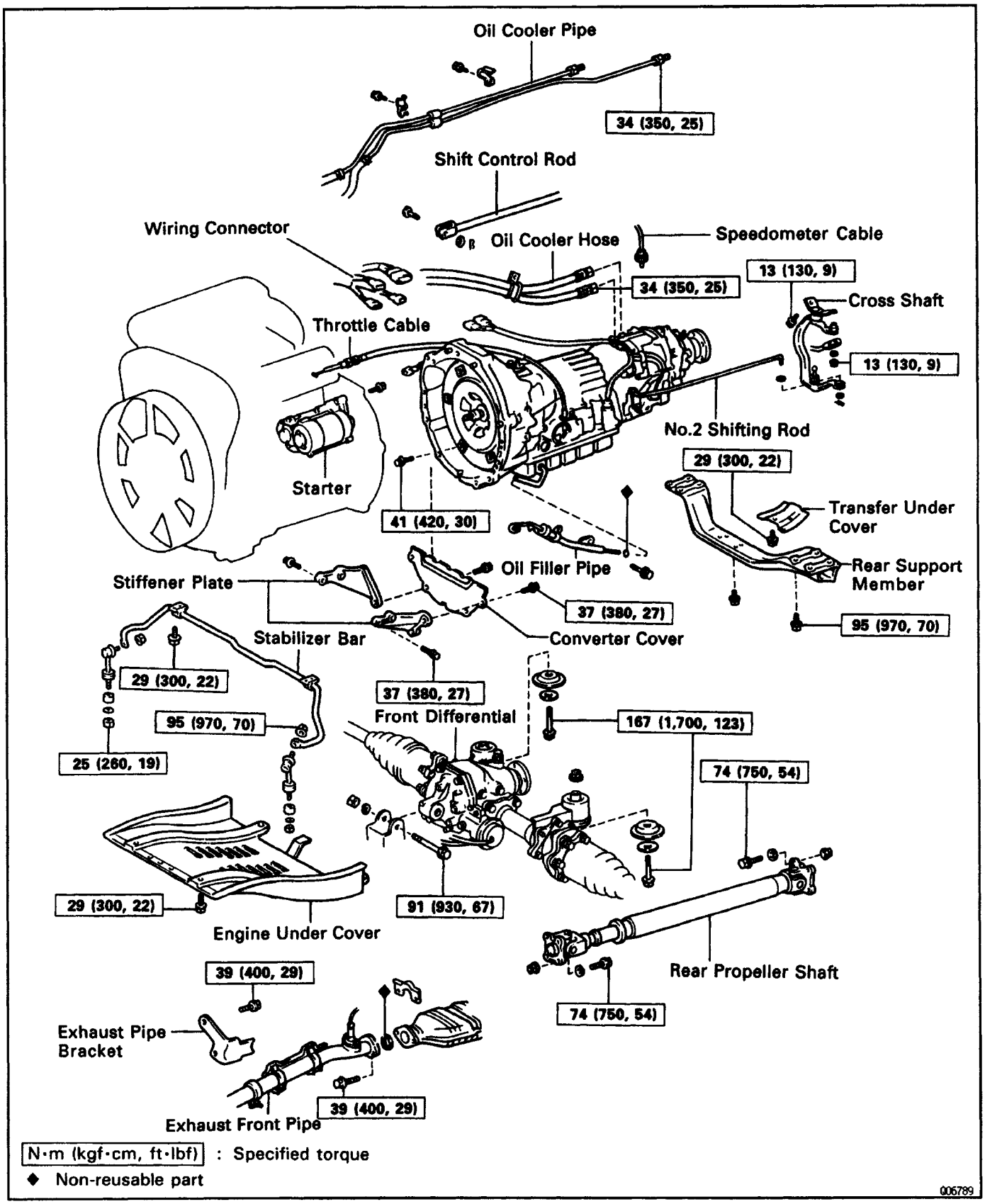

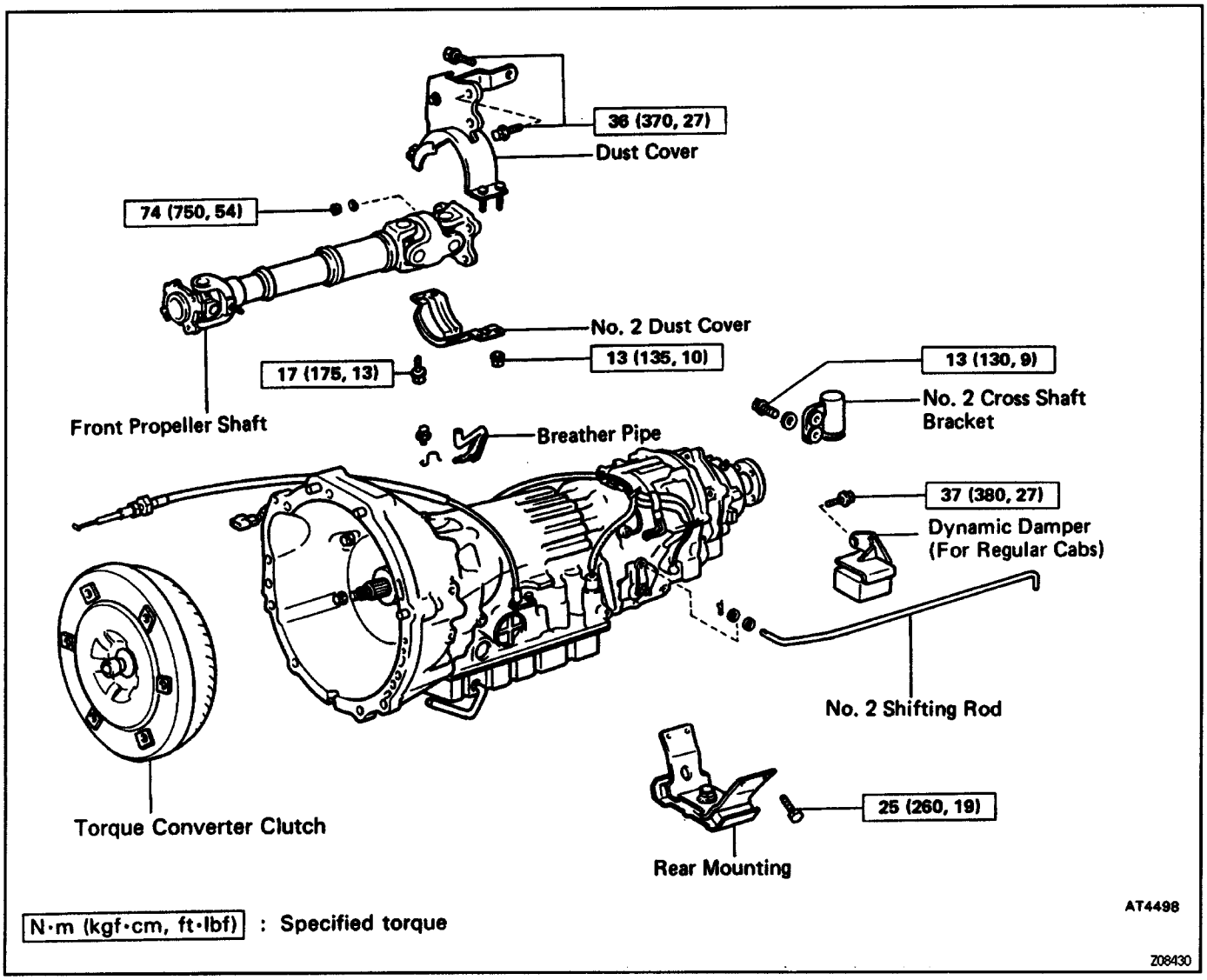

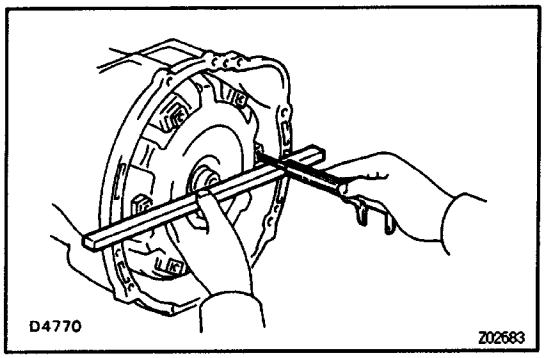

MAIN POINTS OF INSTALLATION

1. CHECK TORQUE CONVERTER CLUTCH INSTALLATION

Using calipers and a straight edge, measure from the installed surface of the torque converter clutch to the front surface of the transmission housing.

Correct distance:

18.0 mm (0.709 in.)

If the distance is less than the standard, check for improper installation.

2. ADJUST TRANSMISSION THROTTLE CABLE

(See page AT2–26)

3. FILL TRANSMISSION WITH ATF AND CHECK FLUID LEVEL

Fluid type:

ATF DEXRON II

Capacity:

	Transmission liter (US qts, Imp. qts)	Transfer liter (US qts, Imp. qts)
Drain and refill	**4.5 (4.8, 4.0)**	**0.8 (0.8, 0.7)**
Dry fill	**10.3 (10.9, 9.1)**	**1.1 (1.2, 1.0)**

NOTICE: Do not overfill.

TORQUE CONVERTER CLUTCH CLEANING

If the transmission is contaminated, the torque converter clutch and transmission cooler should be thoroughly flushed with ATF.

TORQUE CONVERTER CLUTCH AND DRIVE PLATE INSPECTION

1. INSPECT ONE–WAY CLUTCH

(a) Install SST in the inner race of one–way clutch.

SST 09350–30020 (09351–32010)

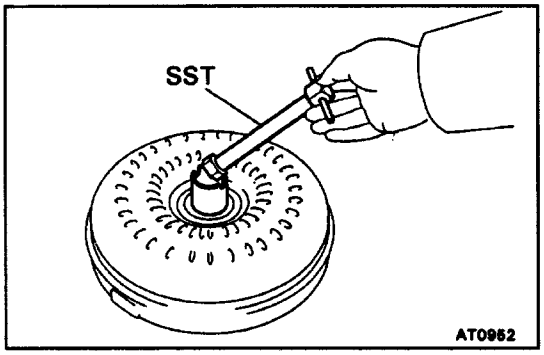

(b) Install SST so that it fits in the notch of the converter hub and outer race of the one–way clutch.

SST 09350–30020 (09351–32020)

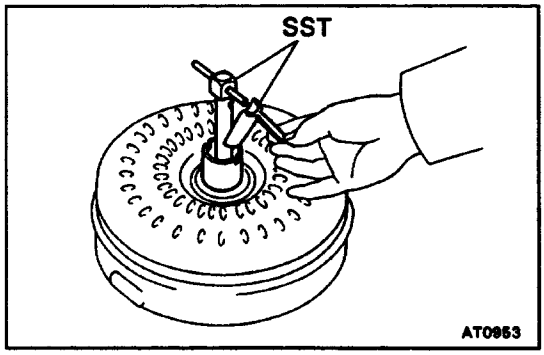

(c) With the torque converter clutch held upright, the clutch should lock when turned counterclockwise, and rotate freely and smoothly clockwise.

If necessary, clean the converter clutch and retest the clutch. Replace the converter if the clutch still fails the test.

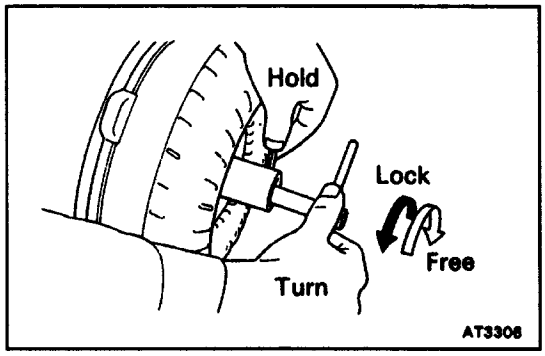

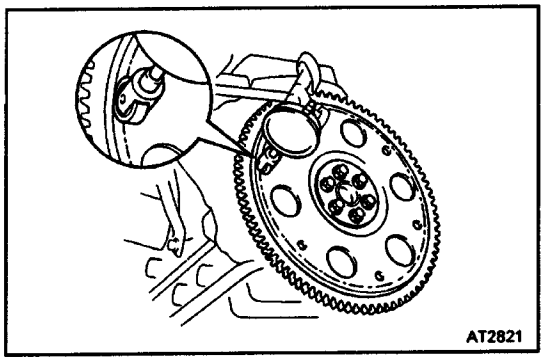

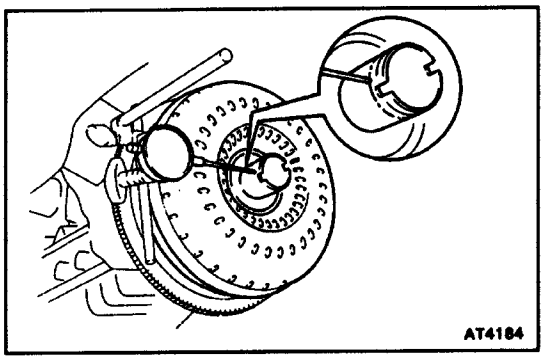

2. MEASURE DRIVE PLATE RUNOUT AND INSPECT RING GEAR .

Set up a dial indicator and measure the drive plate runout.

Maximum runout:

0.20 mm (0.0079 in.)

If the runout is not within specification, or if the ring gear is damaged, replace the drive plate. If installing a new drive plate, note the orientation of spacers and tighten the bolts.

Torque: 83 N–m (850 kgf–em, 61 ft–lbf)

3. MEASURE TORQUE CONVERTER CLUTCH SLEEVE RUNOUT

(a) Temporarily mount the torque converter clutch to the drive plate. Set up a dial indicator.

Maximum runout:

0.30 mm (0.0118 in.)

If the runout is not within specification, try to correct by re–orienting the installation of the converter clutch.

If excessive runout cannot be corrected, replace the torque converter clutch.

HINT: Mark the position of the converter clutch to ensure correct installation.

(b) Remove the torque converter clutch.

A340H AUTOMATIC TRANSMISSION

DESCRIPTION

PRECAUTIONS

When working with FIPG material, you must be observe the following.

- Using a razor blade and gasket scraper, remove all the old FIPG material from the gasket surfaces.
- Thoroughly clean all components to remove all the loose material.
- Clean both sealing surfaces with a non–residue solvent.
- Apply the FIPG in an approx. 1 mm (0.04 in.) wide bead along the sealing surface.
- Parts must be assembled within 10 minutes of application. Otherwise, the FIPG material must be removed and reapplied.

If the vehicle is equipped with a mobile communication system, refer to the precaution in the IN section.

GENERAL DESCRIPTION

The A340H automatic transmission is a 4–speed automatic transmission with electronically controlled 4WD transfer, developed with the aim of producing an easy–driving 4WD vehicle.

The transmission section has fundamentally the same construction as the A340E automatic transmission mounted in the TRUCK 2WD.

The transfer section consists of planetary gears, hydraulic clutches and hydraulic brake. The operation of these is fully controlled by the ECM.

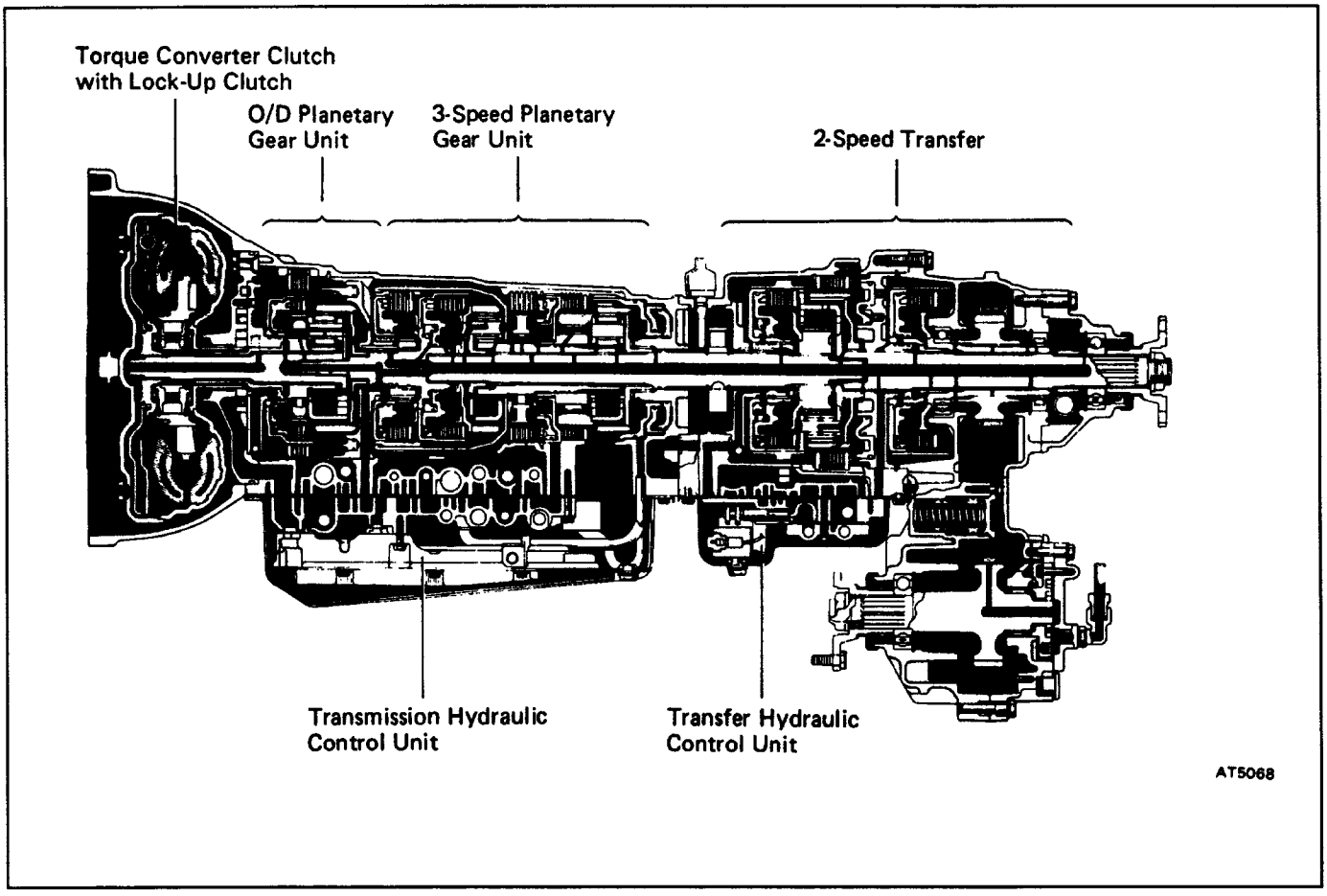

Type of Transmission			A340H
Type of Engine			3VZ–E
Torque Converter Stall Torque Ratio			2.1 : 1
Lock–up Mechanism			Equipped
Transmission Gear Ratio		1st Gear	2.804
		2nd Gear	1.531
		3rd Gear	1.000
		O/D Gear	0.705
		Reverse Gear	2.393
Transfer Gear Ratio		High (H2, H4)	1.000
		Low (L4)	2.659
Transmission	Number of Discs and Plates (Disc/Plate)		
		Forward (C_1)	5/5
		Direct Clutch (C_2)	4/4
		O/D Direct Clutch (C_0)	2/2
		2nd Brake (B_2)	5/5
		1st & Reverse Brake (B_3)	6/6
		O/D Brake (B_0)	4/3
Transfer	Number of Discs and Plates (Disc/Plate)		
		Transfer Direct Clutch (C_3)	6/6
		Front Drive Clutch (C_4)	6/6
		Low Speed Brake (B_4)	7/6
ATF Type			ATF DEXRON® II
ATF Capacity	Transmission	Dry Fill	10.3 liters (10.9 US qts, 9.1 Imp. qts)
		Drain & Refill	4.5 liters (4.8 US qts, 4.0 Imp. qts)
	Transfer	Dry Fill	1.1 liters (1.2 US qts, 1.0 Imp. qts)
		Drain & Refill	0.8 liters (0.8 US qts, 0.7 Imp. qts)

OPERATION

Transmission

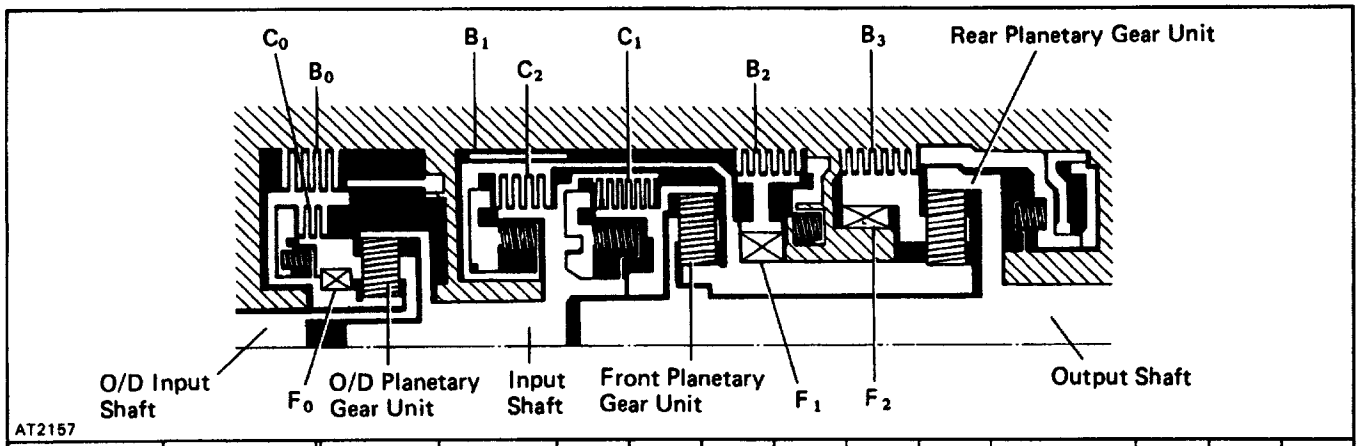

Shift Lever Position	Gear	No. 1 Solenoid Valve	No.2 Solenoid Valve	C_0	C_1	C_2	B_0	B_1	B_2	B_3		F_0	F_1	F_2
										I.P.	O.P.			
P	Parking	ON	OFF	●										
R	Reverse	ON	OFF	●		●				●	●	●		
N	Neutral	ON	OFF	●										
D	1st	ON	OFF	●	●							●		●
	2nd	ON	ON	●	●				●			●	●	
	3rd	OFF	ON	●	●	●			●			●		
	O/D	OFF	OFF		●	●	●		●					
2	1st	ON	OFF	●	●							●		●
	2nd	ON	ON	●	●			●	●			●	●	
	3rd	OFF	ON	●	●	●			●			●		
L	1st	ON	OFF	●	●					●	●	●		●
	*2nd	ON	ON	●	●			●	●			●	●	

t.P. ..... Inner Piston
O.P. ..... Outer Piston

Transfer

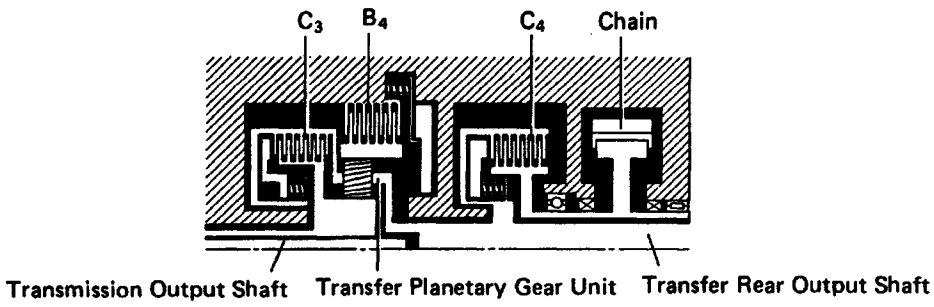

ND0045

Transfer gear position	No–4 solenoid valve	C_3	C_4	B_4
H2	OFF	●		
H4	OFF	●	●	
L4	ON		●	●

1. FUNCTION OF COMPONENTS

Transmission

Component		Function
C_1	Forward Clutch	Connects input shaft and front planetary ring gear.
C_2	Direct Clutch	Connects input shaft and front & rear planetary sun gear.
C_O	O/D Direct Clutch	Connects overdrive sun gear and overdrive planetary carrier.
B_1	2nd Coast Brake	Prevents front & rear planetary sun gear from turning either clockwise or counterclockwise.
B_2	2nd Brake	Prevents outer race of F, from turning either clockwise or counterclockwise thus preventing the front & rear planetary sun gear from turning counterclockwise.
B_3	1 st & Reverse Brake	Prevents rear planetary carrier from turning either clockwise or counterclockwise.
B_O	O/D Brake	Prevents overdrive sun gear from turning either clockwise or counterclockwise.
F_1	No. 1 One–Way Clutch	When62 is operating, this clutch prevents the front & rear planetary sun gear from turning counterclockwise.
F_2	No. 2 One–Way Clutch	Prevents rear planetary carrier from turning counterclockwise.
F_O	O/D One–Way Clutch	When the transmission is being driven by the engine, this clutch connects the overdrive sun gear and overdrive planetary carrier.
Planetary Gears		These gears change the route through which driving force is transmitted in accordance with the operation of each clutch and brake in order to increase or reduce the input and output speed.

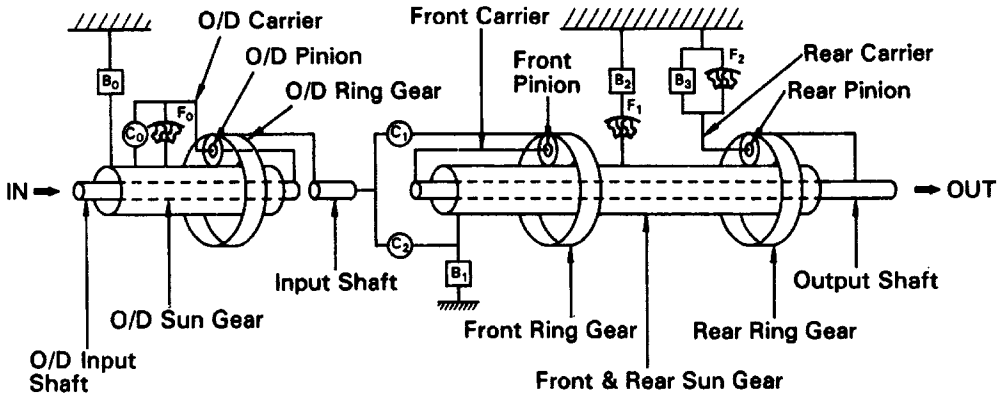

D or 2 Position 1st Gear

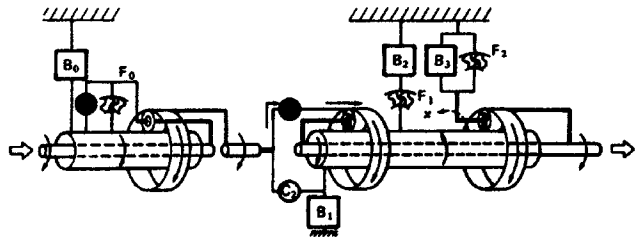

AT5854

2 or L Position 2nd Gear

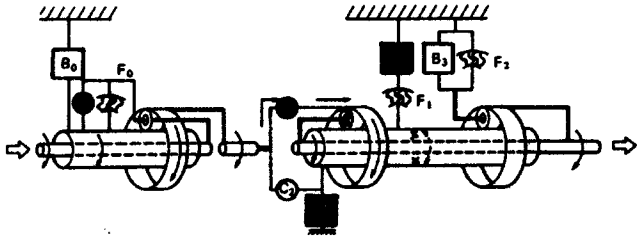

AT5854

D Position 2nd Gear

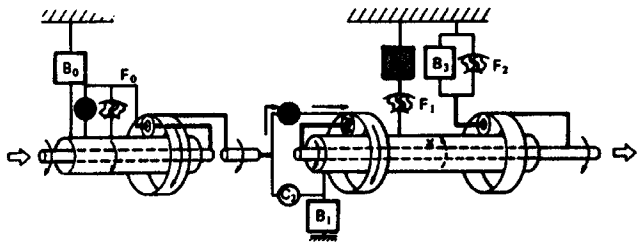

AT5854

L Position 1st Gear

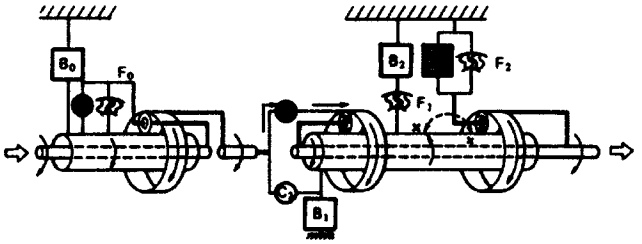

AT5854

D or 2 Position 3rd Gear

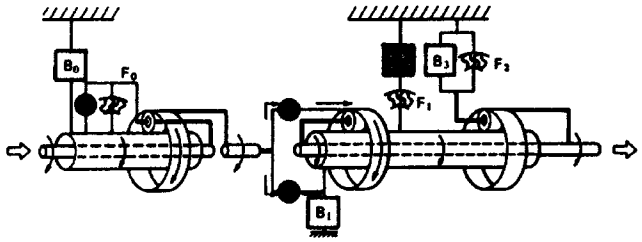

AT5854

R Position Reverse Gear

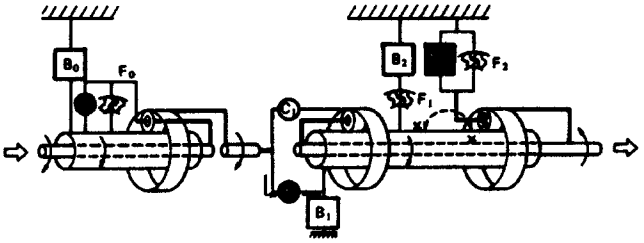

AT5854

D Position O/D

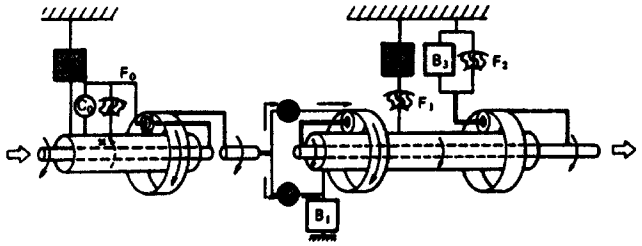

AT5854

V03403

Transfer

Component		Function
C_3	Forward Clutch	Connects transmission output shaft and transfer pinion gear.
C_4	Direct Clutch	Connects transfer rear output shaft and front drive gear.
B_4	O/D Direct Clutch	Prevents transfer ring gear from turning either clockwise or counterclockwise.

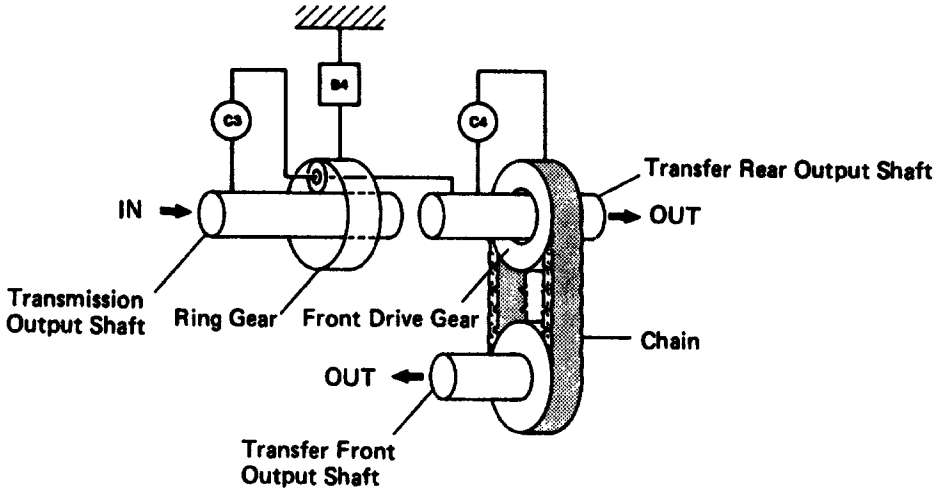

H2 Position

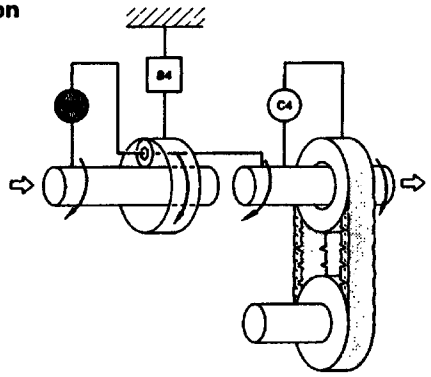

ND0047

H4 Position

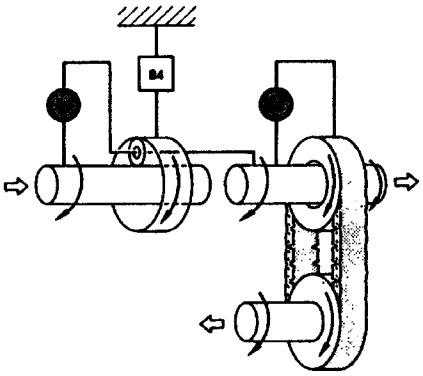

ND0047

L4 Position

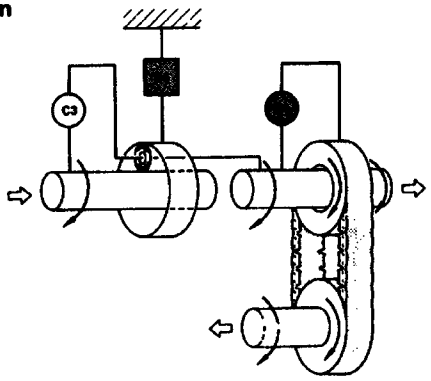

ND00047

2. HYDRAULIC CONTROL SYSTEM

Transmission

The hydraulic control system is composed of the oil pump, the valve body, the solenoid valves, and the clutches and brakes, as well as the fluid passages which connect all of these components.

Based on the hydraulic pressure created by the oil pump, the hydraulic control system governs the hydraulic pressure acting on the torque converter clutch, clutches and brakes in accordance with the vehicle driving conditions.

There are 3 solenoid valves on the valve body. These solenoid valves are turned on and off by signals from the ECM to operate the shift valves. These valves then switch the fluid passages so that fluid goes to the torque converter clutch and planetary gear units.

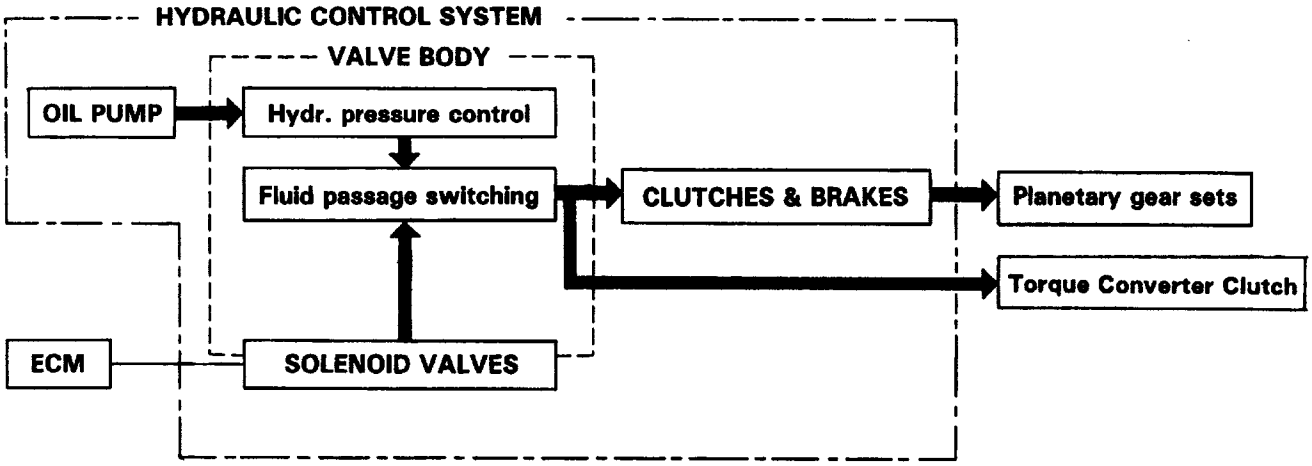

V01537

Transfer

The hydraulic control system consists of a valve body, No.4 solenoid valve, a brake (134) and 2 clutches (C3, C4) and passages that connect these elements. It hydraulically controls the planetary gear unit either manually, or automatically by the ECM.

3. ELECTRONIC CONTROL SYSTEM

The electronic control system, which controls the transmission and transfer shift timing and the operation of the lock–up clutch, is composed of the following three parts:

1. Sensor:

These sensors respond to the vehicle speed, throttle opening and other conditions and transmit these data to the ECM in the form of electrical signals.

2. ECM

The ECM determines the transmission and transfer shift timing and lock–up timing based upon the signals from sensors, and controls the solenoid valves of the hydraulic control unit accordingly.

3. Actuators

These are four solenoid valves that control hydraulic pressure acting on the hydraulic valves to control shifting and lock–up timing.

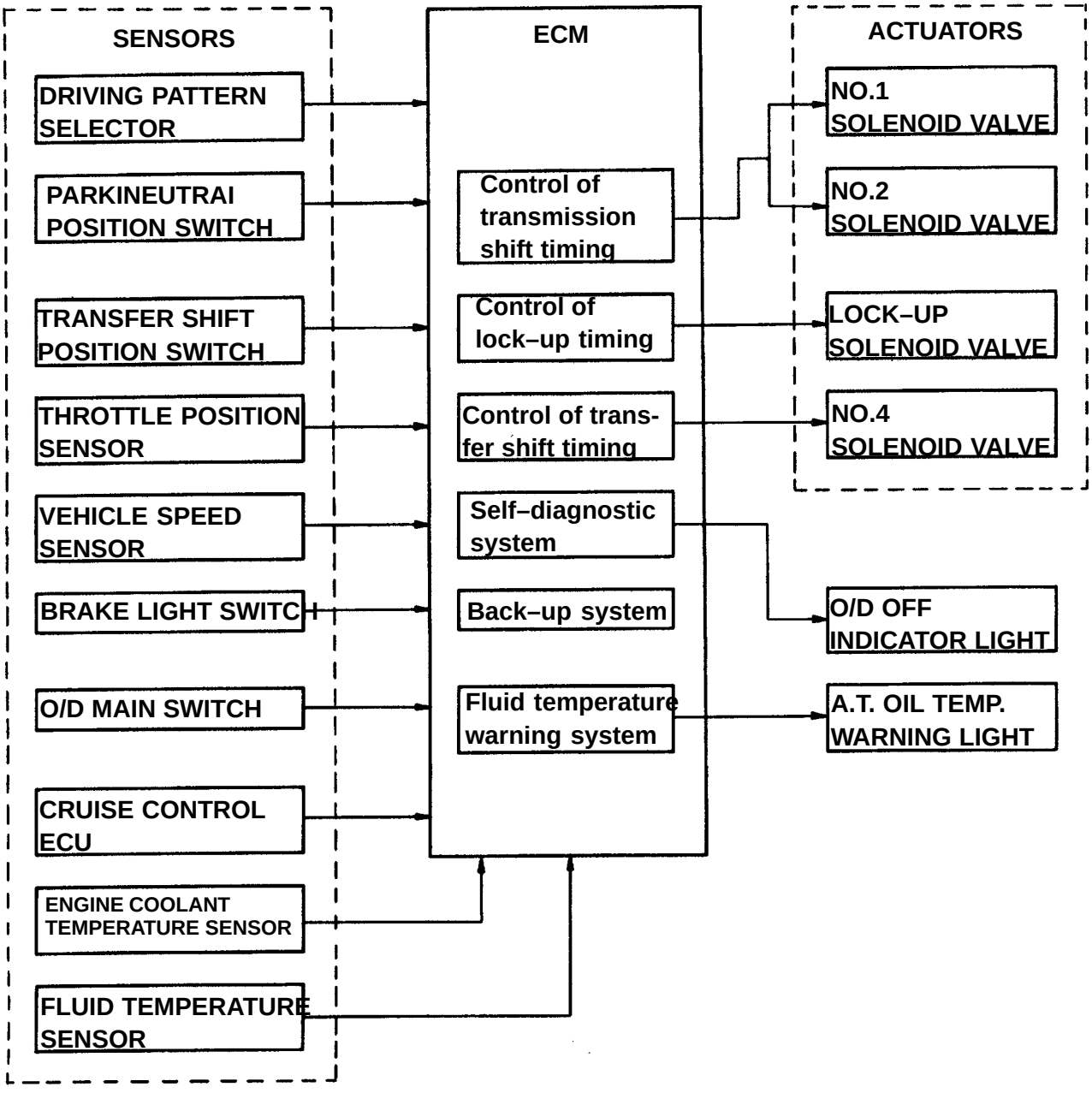

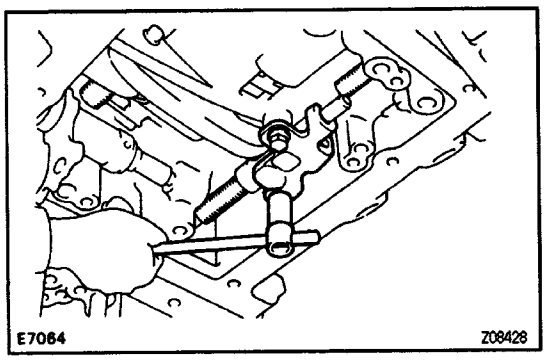

PARKING LOCK PAWL

PARKING LOCK PAWL REMOVAL

1. **REMOVE TRANSFER VALVE BODY**
   (See page AT2–63)
2. **REMOVE PARKING LOCK PAWL BRACKET**
   Remove the 2 bolts and bracket.

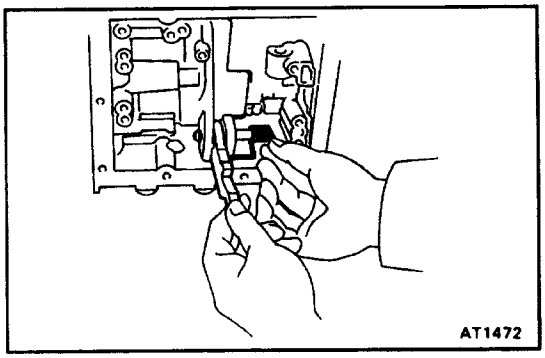

3. **REMOVE SPRING, SHAFT AND PARKING LOCK PAWL**
   Remove the spring, shaft and parking lock pawl.

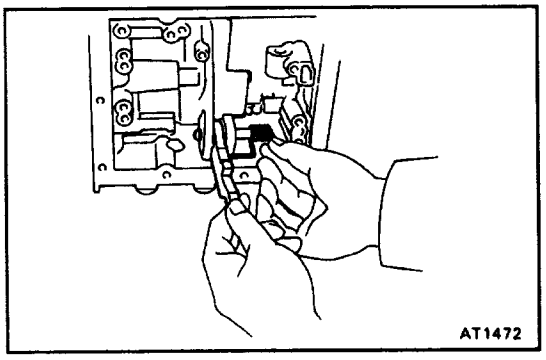

PARKING LOCK PAWL INSTALLATION

1. **INSTALL PARKING LOCK PAWL, SHAFT AND SPRING**
   Install the parking lock pawl, shaft and spring.

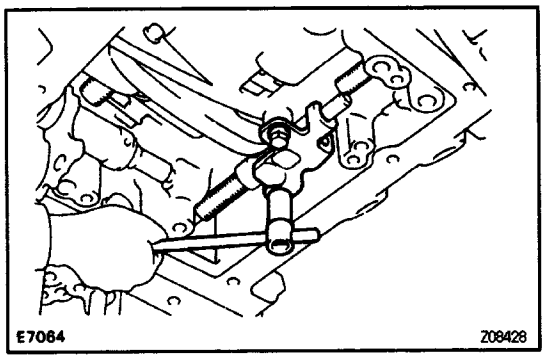

2. **INSTALL PARKING LOCK PAWL BRACKET**
   (a) Install the 2 bolts finger tight.
   (b) Check that the parking lock pawl operates smoothly.
   (c) Torque the bolts.
   Torque: 6.9 N–m (70 kgf–cm, 81 in.–lbf)
3. **INSTALL TRANSFER VALVE BODY**
   (See page AT2–64)

PREPARATION

SSM (SPECIAL SERVICE TOOLS)

	09032–00100 Oil Pan Seal Cutter	
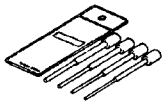	09201–10000 Valve Guide Bushing Remover & Replacer Set	Speedometer driven gear oil seal
	(09201–01080) Valve Guide Bushing Remover & Replacer Set	
	09350–30020 TOYOTA Automatic Transmission Tool Set	
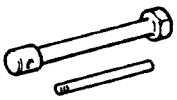	(09351–32010) One–way Clutch Test Tool	
	(09351–32020) Stator Stopper	
	09843–18020 Diagnosis Check Wire	
	09921–00010 Spring Tension Tool	Speedometer driven gear oil seal
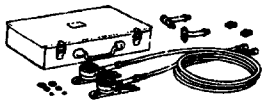	09992–00094 Automatic Transmission Oil Pressure Gauge Set	

EQUIPMENT

Ohmmeter	
Voltmeter	
Torque wrench	
Dial indicator with magnetic base	Check drive plate runout.
Vernier calipers	Check torque converter clutch installation.
Straight edge	Check torque converter clutch installation.

LUBRICANT

Item	Capacity	Classification
Automatic transmission fluid Dry fill Transmission Transfer Drain and refill Transmission Transfer Drain and refill	10.3 liters (10.9 US qts, 9.1 Imp. qts) 1.1 liters (1.2 US qts, 1.0 Imp. qts) 4.5 liters (4.8 US qts, 4.0 Imp. qts) 0.8 liters (0.8 US qts, 0.7 Imp. qts)	ATF DEXRON' II

SSM (SPECIAL SERVICE MATERIALS)

08826–00090	Seal Packing 1281, THREE BOND 1281 or equivalent (FIPG)	
08833–00070	Adhesive 1324, THREE BOND 1324 or equivalent	

SERVICE SPECIFICATIONS

SERVICE DATA

Line pressure (wheel locked)	Engine idling			
	D position	422–481 kPa	4.3–4.9 kgf/cm²	61–70 psi
	R position	520–618 kPa	4.3–6.3 kgf/cm²	75–90 psi
AT stall (Throttle valve fully opened)				
	D position	1,118–1,363 kPa	11.4–13.9 kgf/cm²	162–198 psi
	R position	1,373–1,716 kPa	14.0–17.5 kgf/cm²	199–249 psi
Engine stall revolution (D and R position)		2,850 ± 150 rpm		
Time lag	N → D position	Less than 1.2 seconds		
	N → R position	Less than 1.5 seconds		
Engine idle speed (A/C OFF)				
	N position	800 ± 50 rpm		
Throttle cable adjustment (Throttle valve fully opened)		Between boot and face and inner cable stopper		
		0–1 mm	0–0.04 in.	
Torque converter clutch installation distance		18.0 mm	1.0079 in.	
Drive plate runout	Max	0.20 mm	0.0079 in.	
Torque converter clutch sleeve runout	Max	0.30 mm	0.0118 in.	

AUTOMATIC SHIFT SCHEDULE

SHIFT POINT (Transfer shift position 'H2' or 'H4')

Shift position	Shifting point		Vehicle speed km/h (mph)
D (NORM)	Throttle valve fully opened	1→2	50–53 (31–33)
		2→3	90–96 (56–60)
		3→O/D	131–138 (81–86)
		O/D→3	125–132 (78–82)
		3→2	84–91 (52–57)
		2→1	40–44 (25–27)
	Throttle valve fully closed	3→O/D	35–39 (22–24)
		O/D→3	21–25 (13–16)
D (PWR)	Throttle valve fully opened	1→2	50–53 (31–33)
		2→3	90–96 (56–60)
		3→O/D	131–138 (81–86)
		O/D→3	125–132 (78–82)
		3→2	84–91 (52–57)
		2→1	40–44 (25–27)
	Throttle valve fully closed	3→O/D	38–42 (24–26)
		O/D→3	21–25 (13–16)
2 (NORM and PWR)	Throttle valve fully opened	1→2	43–46 (27–29)
		2→3	103–109 (64–68)
		3→2	97–103 (60–64)
		2→1	38–42 (24–26)
L (NORM and PWR)	Throttle valve fully opened	3→2	82–89 (51–55)
		2→1	47–51 (29–32)

LOCK– UP (Transfer shift position ’H2’ or ’H4’)

D position km/h (mph) Throttle valve opening 596	Lock –up ON	Lock–up OFF
’3rd Gear	**52–56 (32–35)**	**50–53 (31–33)**
0/D Gear (NORM)	**64–68 (40–42)**	**55–59 (34–37)**
O/D Gear (PWR)	**64–68 (40–42)**	**58–62 (36–39)**

*: O/D main switch OFF

TORQUE SPECIFICATIONS

Part tightened		N·m	kgf·cm	ft·lbf
Oil cooler pipe union nut		34	350	25
Torque converter clutch x Drive plate		41	420	30
Drive plate x Crankshaft		83	850	61
Parking lock pawl bracket		6.9	70	61 in.·lbf
Valve body x Transmission		10	100	7
Detent spring x Valve body		10	100	7
Solenoid x Valve body		10	100	7
Oil strainer		10	100	7
Oil pan		7.4	75	65 in.·lbf
No.2 vehicle speed sensor		16	160	12
Oil cooler hose		34	350	25
Cooler union		29	300	22
Park/Neutral position switch	Bolt	13	130	9
	Nut	6.9	70	61 in.·lbf
Control shaft lever		16	160	12
Cross shaft x Body		13	130	9
Cross shaft x Transfer shift linkage		13	130	9
Dust cover x No.2 dust cover	Bolt	17	175	13
	Nut	13	135	10
Dust cover x Transfer		36	370	27
Front differential front mounting bolt		147	1,500	108
Front differential rear mounting bolt		167	1,700	123
Oil pan drain plug		20	205	15
Exhaust manifold x Front exhaust pipe		62	630	46
Front exhaust pipe clamp		19	195	14
Front exhaust pipe bracket x Transmission		39	400	29
Front exhaust pipe x Three–way catalytic converter		39	400	29
Stiffener plate x Converter cover		37	380	27
Stabilizer bar link x Lower suspension arm		25	260	19
Stabilizer bar bracket x Frame		29	300	22
Engine under cover		29	300	22
Dynamic damper		37	380	27
Rear propeller shaft x Rear differential		74	750	54
Rear propeller shaft x Transfer		74	750	54
Front propeller shaft x Front differential		74	750	54
Front propeller shaft x Transfer		74	750	54
Rear support member x Transfer under cover		29	300	22
Rear support member x Frame		95	970	70

SHIFT LOCK SYSTEM
COMPONENTS AND CIRCUIT

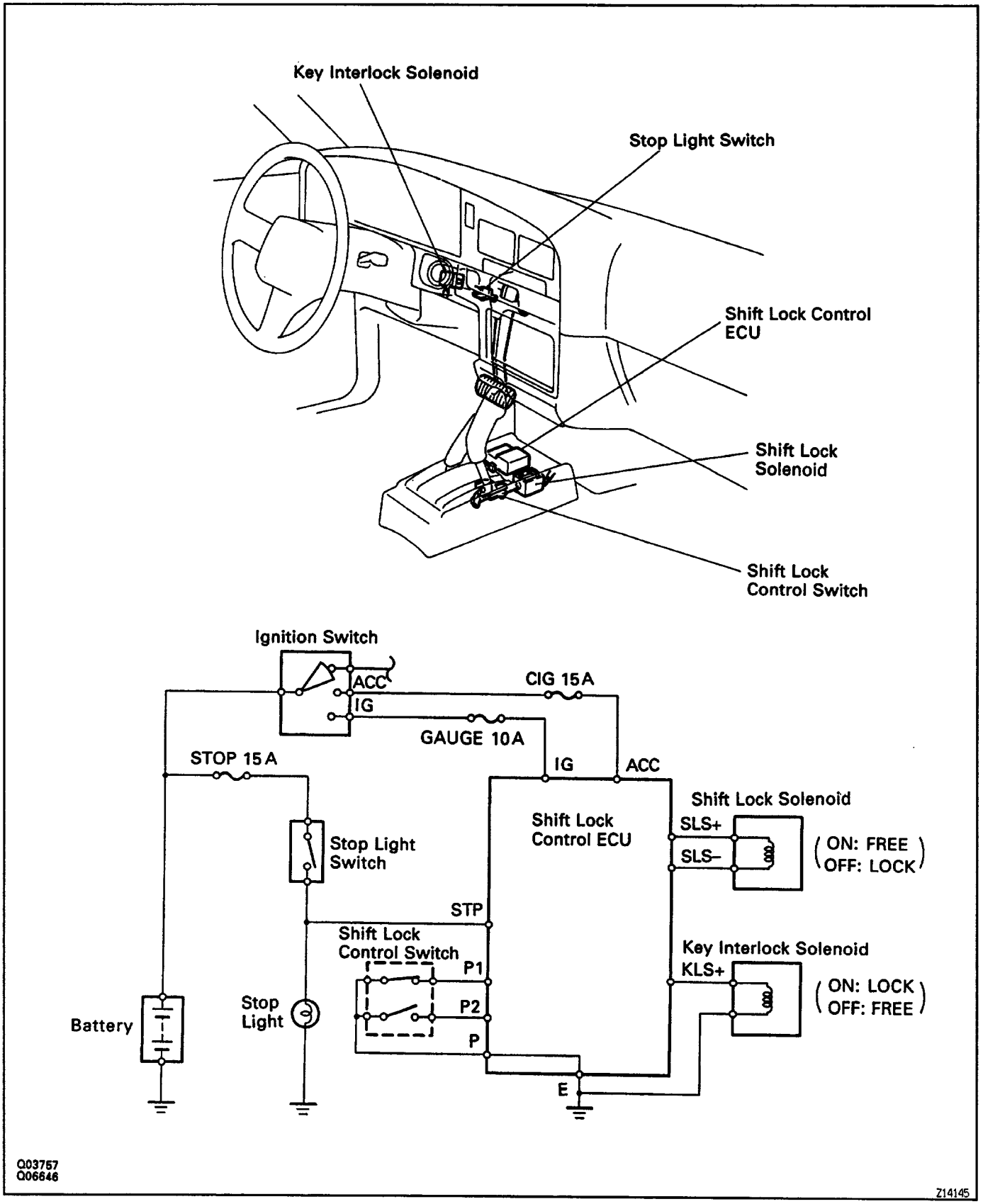

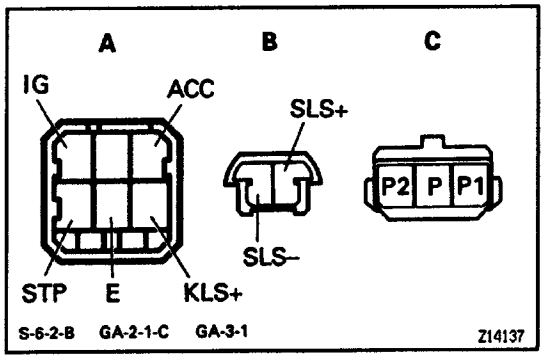

ELECTRIC CONTROL COMPONENTS INSPECTION

1. INSPECT SHIFT LOCK CONTROL ECU

Using a voltmeter, measure the voltage at each terminal.

Connector	Terminal	Measuring condition		Voltage (V)
A	ACC – E	IG SW ACC position		10 – 14
	IG – E	IG SW ON position		10 – 14
	STP – E	Depress brake pedal		10 – 14
	KLS + – E	①	IG SW ACC position and P position	0
		②	P→ R, N, D, 2, L position	10 – 14
		③	↑ (Approx. after second)	6 – 9
B	SLS + – SLS –	①	IG SW ON position and P position	0
		②	Depress brake pedal	10 – 14
		③	P → R, N, D, 2, L positions or release brake pedal	0
C	P1 – P	①	IG SW ON, P position and depress brake pedal	0
		②	R, N, D, 2, L positions	10 – 14
	P2 – P	①	IG SW ACC position and P position	10 – 14
		②	R, N, D, 2, L positions	0

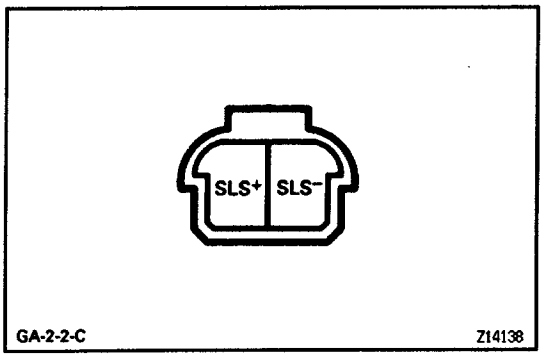

2. INSPECT SHIFT LOCK SOLENOID

(a) Disconnect the solenoid connector.

(b) Using an ohmmeter, measure the resistance between terminals.

Standard resistance:

29–36 Ω

(c) Apply the battery positive voltage between terminals. At this time, confirm that solenoid operates.

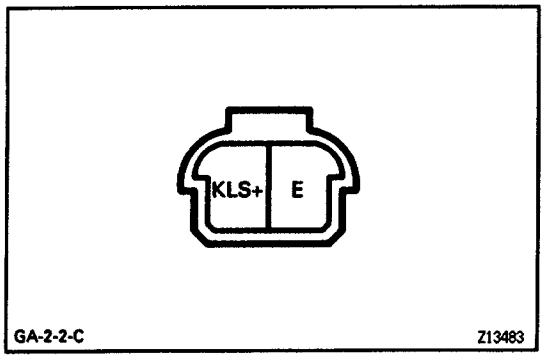

3. INSPECT KEY INTERLOCK SOLENOID

(a) Disconnect the solenoid connector.

(b) Using an ohmmeter, measure the resistance between terminals.

Standard resistance:

12–17 Ω

(c) Apply the battery positive voltage between terminals. At this time, confirm that solenoid operates.

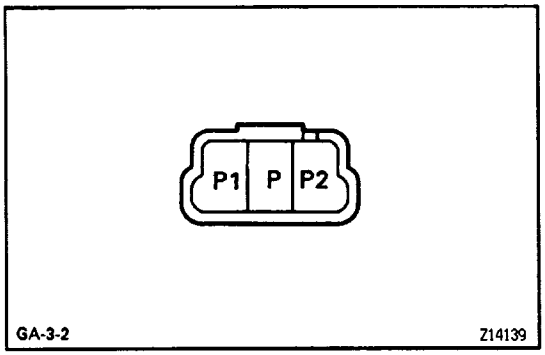

4. INSPECT SHIFT LOCK CONTROL SWITCH

Inspect that there is continuity between each terminals.

Shift position	Tester condition to terminal	Specified value
P position (Release button is not pushed)	**P1 — P**	**Continuity**
R, N, D, 2, L positions	**P2 — P**	**Continuity**

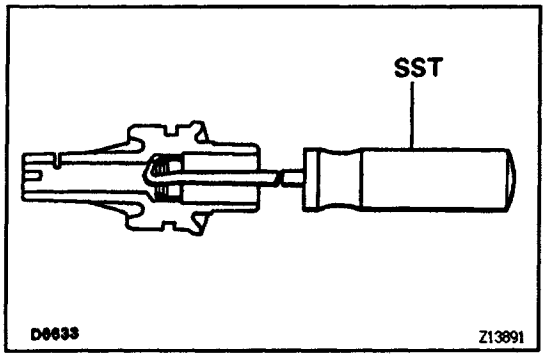

SPEEDOMETER DRIVEN GEAR

OIL SEAL REPLACEMENT

1. REMOVE OIL SEAL

Using SST, remove the oil seal.
SST 09921– 00010

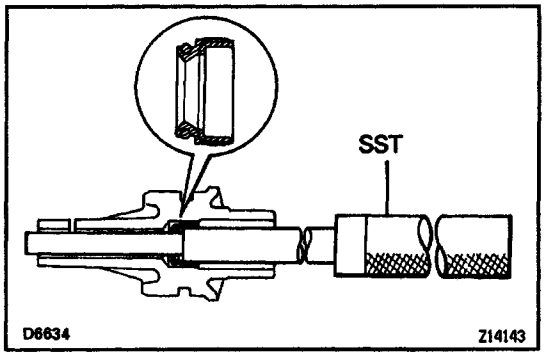

2. INSTALL OIL SEAL

Using SST, drive a new oil seal into the sleeve.
SST 09201–10000 (09201 –01080)
Oil seal depth: 25 mm (O.98 in.)

THROTTLE CABLE

THROTTLE CABLE REMOVAL

1. **DISCONNECT THROTTLE CABLE FROM THROTTLE LINKAGE**
2. **DRAIN TRANSMISSION FLUID**
   Remove the drain plug and drain the fluid into a suitable container.
3. **REMOVE FRONT STABILIZER BAR**
   (See page SA–122)
4. **REMOVE FRONT PROPELLER SHAFT**
   (See page PR–7)
5. **REMOVE TRANSMISSION OIL PAN**
   (a) Remove the 19 bolts.

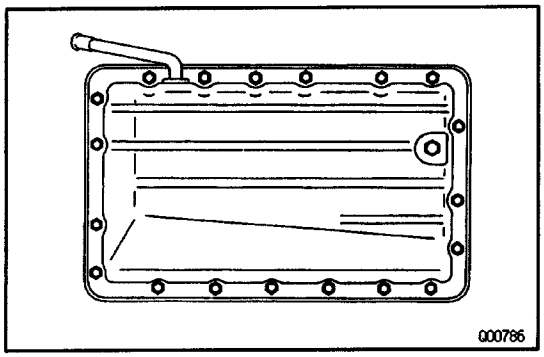

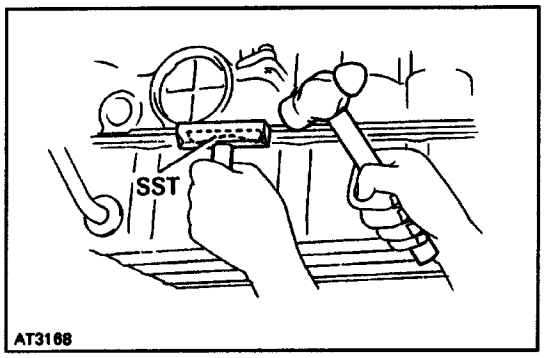

(b) Insert the blade of SST between the transmission case and oil pan, cut off applied sealer.

SST 09032–00100

NOTICE: Be careful not to damage the oil flange.

(c) Remove pan by lifting the transmission case.

6. **DISCONNECT SOLENOID CONNECTOR**

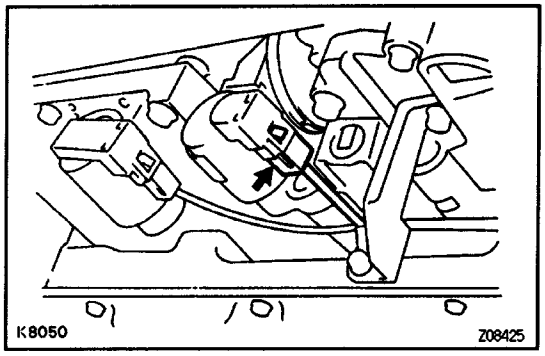

7. **DISCONNECT THROTTLE CABLE FROM VALVE BODY**

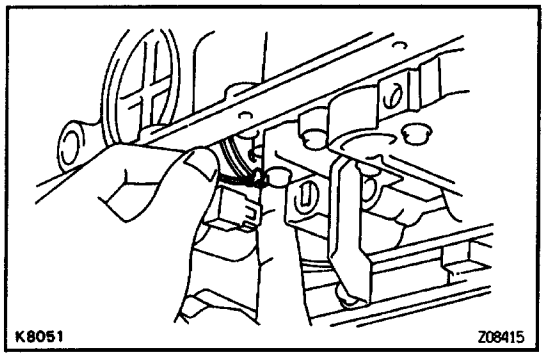

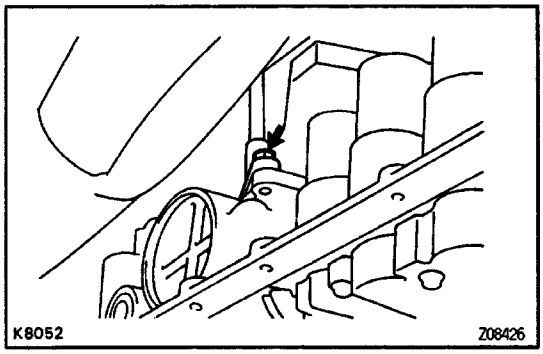

8. REMOVE THROTTLE CABLE

Remove the bolt and pull out the cable from the transmission case.

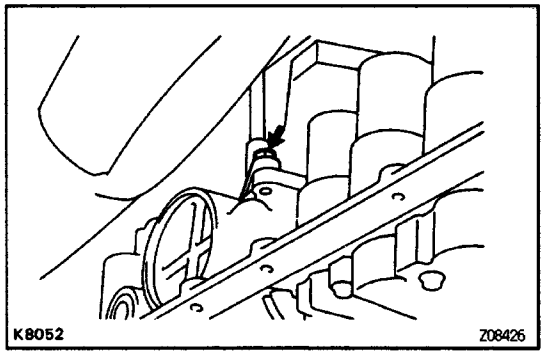

THROTTLE CABLE INSTALLATION

1. INSTALL CABLE INTO TRANSMISSION CASE

(a) Be sure to push it in all the way.

(b) Install the bolt.

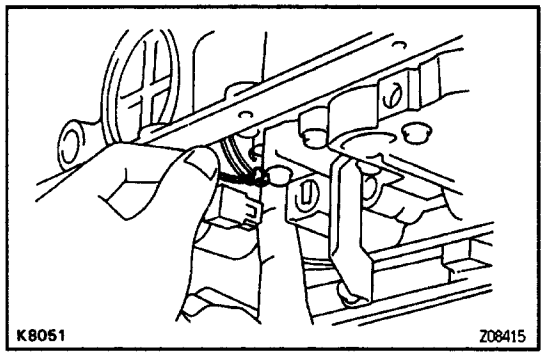

2. CONNECT THROTTLE CABLE TO VALVE BODY

Connect throttle cable to the cam.

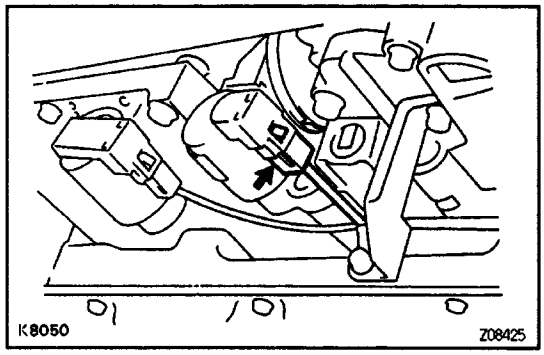

3. CONNECT SOLENOID CONNECTOR

4. INSTALL OIL PAN AND OIL PAN DRAIN PLUG

(See pages AT2–61 and AT2–62)

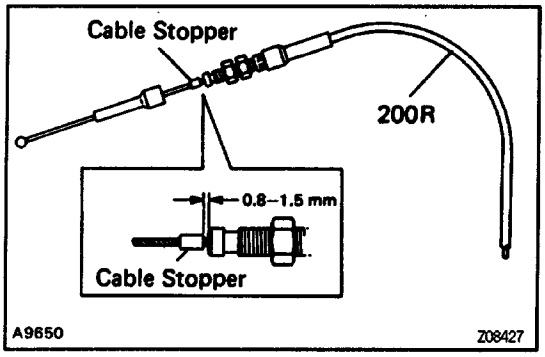

5. IF THROTTLE CABLE IS NEW, STAKE STOPPER ON INNER CABLE

HINT: New cable does not have a staked cable stopper.

(a) Bend the cable so there is a radius of about 200 R.

(b) Pull the inner cable lightly until a slight resistance is felt, and hold it.

(c) Stake the stopper, 0.8 – 1.5 mm (0.0031 – 0.059 in.) from the end of outer cable.

6. INSTALL FRONT PROPELLER SHAFT
(See page PR–16)

7. INSTALL FRONT STABILIZER BAR
(See page SA–123)

8. CONNECT THROTTLE CABLE TO THROTTLE LINKAGE

9. ADJUST THROTTLE CABLE
(See page AT2–26)

10. FILL TRANSMISSION WITH ATF
(See page AT2–24)

NOTICE: Do not overfill

Fluid type:

ATF DEXRON II

11. CHECK FLUID LEVEL

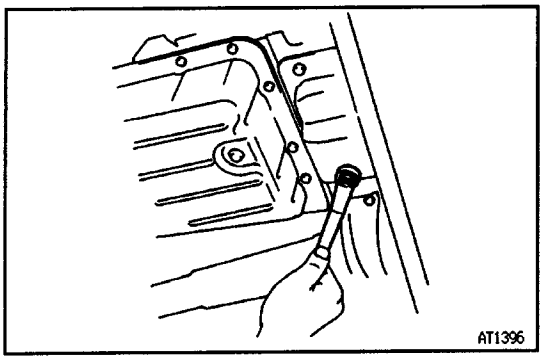

TRANSFER VALVE BODY

VALVE BODY AND/OR SOLENOID VALVE

1. CLEAN TRANSFER EXTERIOR

To prevent contamination, clean the exterior of the transfer.

2. DRAIN TRANSFER CASE FLUID

Remove the drain plug and drain fluid into a suitable container.

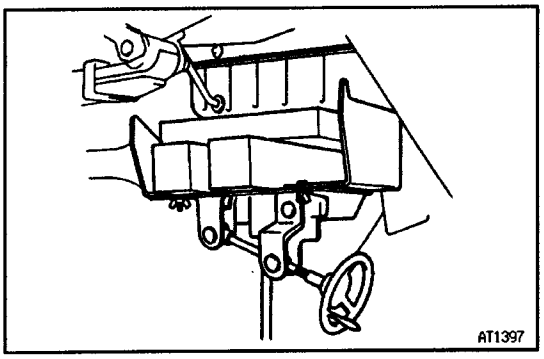

3. SUPPORT TRANSMISSION

Using a transmission jack, support the transmission.

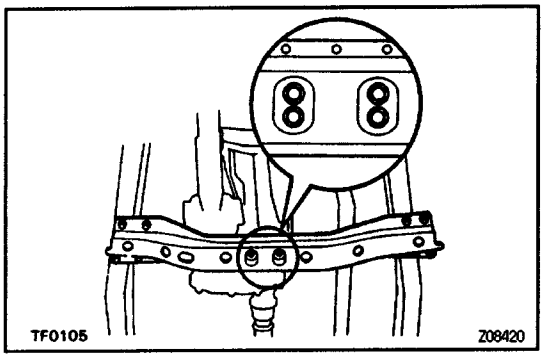

4. REMOVE REAR SUPPORT MEMBER FROM SIDE FRAME

(a) Remove the 4 bolts from the engine rear mounting.
(b) Raise the transmission slightly with a jack.
(c) Remove the 8 bolts from the side frame and remove the rear support member.

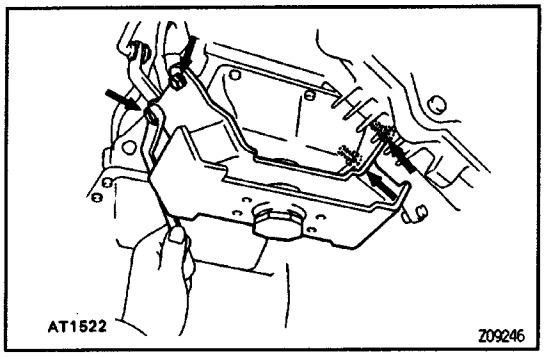

5. REMOVE MEMBER BRACKET FROM TRANSFER

Remove the 4 bolts and member bracket from the transfer.

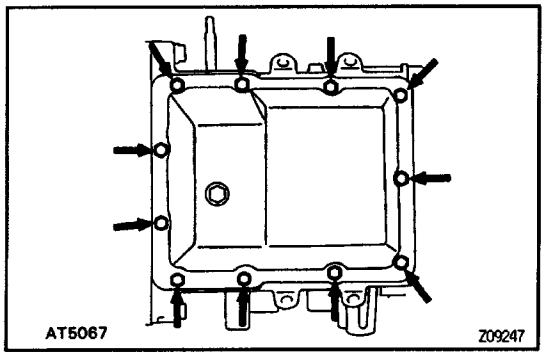

6. REMOVE TRANSFER OIL PAN

(a) Remove the 11 bolts.

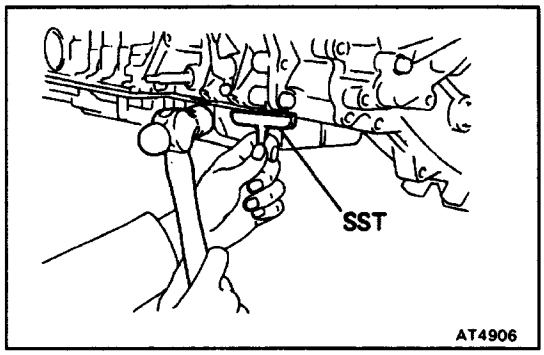

(b) Install the blade of SST between the transfer case and oil pan, cut oft applied sealer.

SST 09032–00100

NOTICE: Be careful not to damage the oil pan flange.

(c) Remove the transfer oil pan.

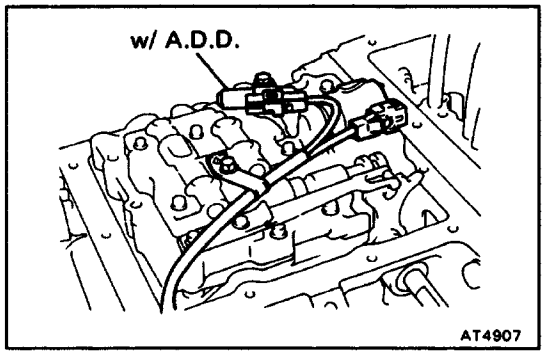

7. DISCONNECT SOLENOID CONNECTOR

Disconnect the connectors from No.4 solenoid and transfer pressure switch.

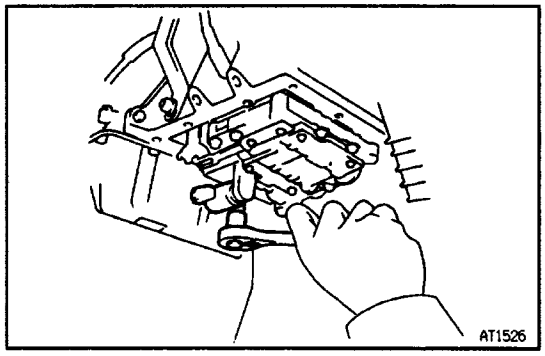

8. WHEN REPLACING SOLENOID

(a) Remove the solenoid mounting bolt.

(b) Remove the solenoid.

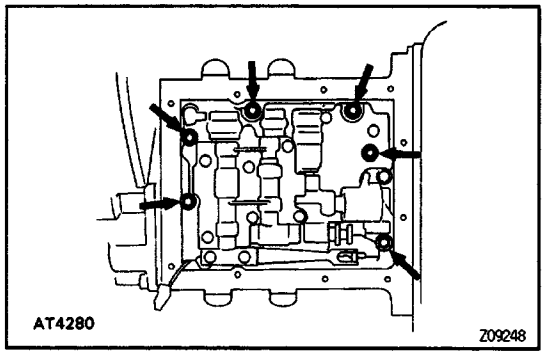

9. REMOVE VALVE BODY

Remove the 6 bolts and valve body.

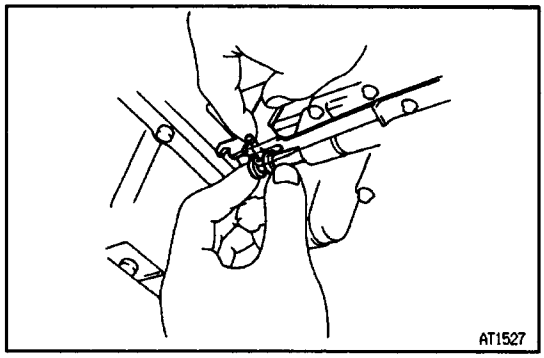

VALVE BODY AND/OR SOLENOID VALVE

1. INSTALL VALVE BODY

(a) Align the manual valve lever with the manual valve.

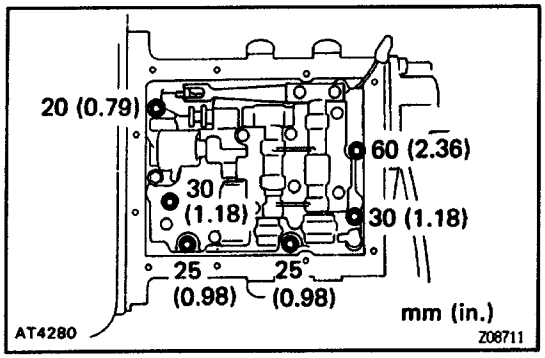

(b) Install the bolts, as shown. Torque the bolts evenly.
Torque: 10 N–m (100 kgf–cm, 7 ft–lbf)

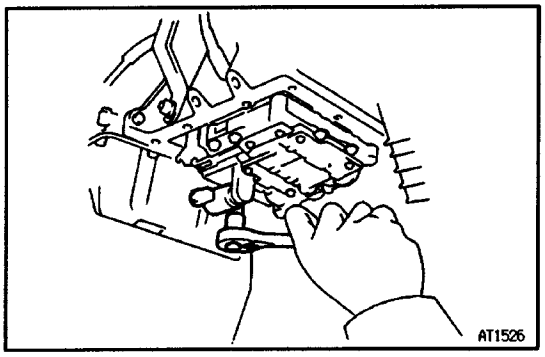

2. WHEN REPLACING SOLENOID
Install the solenoid and torque the bolt.
Torque: 10 N–m (100 kgf–cm, 7 ft–lbf)

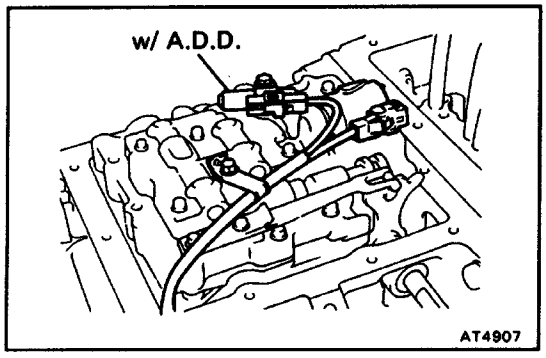

3. CONNECT CONNECTOR TO SOLENOID

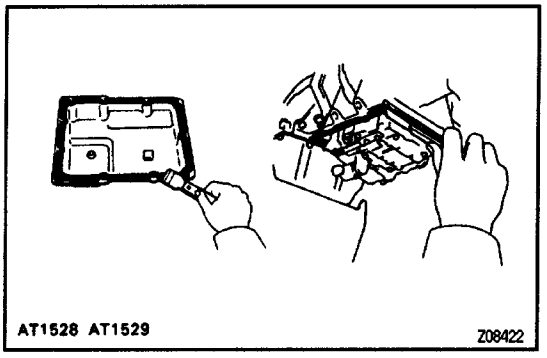

4. INSTALL TRANSFER OIL PAN
(a) Remove any packing material and be careful not to drop the oil on the contacting surfaces of the oil pan and transfer case.
(b) Clean contacting surfaces of any residual packing material, using gasoline or alcohol.

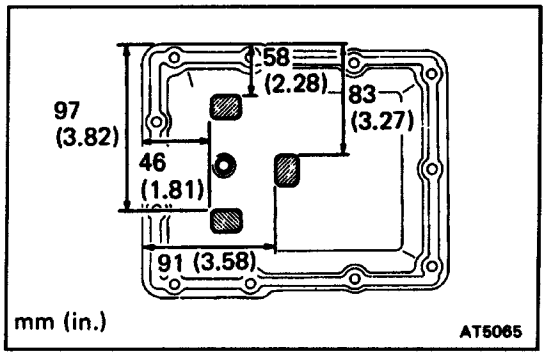

(c) Install the 3 magnets, as shown.

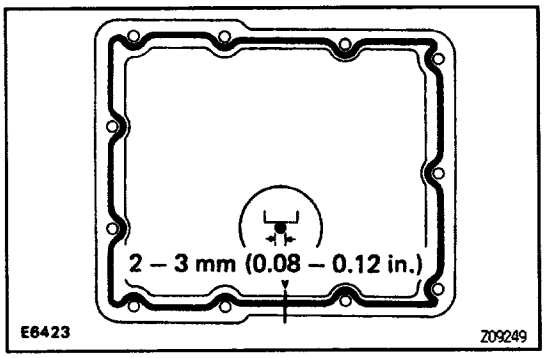

(d) Apply FIPG to the oil pan, as shown in the illustration.

FIPG:

Part No. 08826–00090, THREE BOND 1281 or equivalent

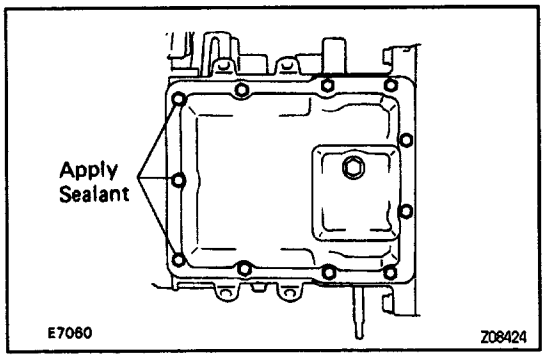

(e) Apply sealant to the threads of the 3 bolts.

Sealer:

Part No. 08833–00070, THREE BOND 1324 or equivalent

(f) Install the oil pan and torque the 11 bolts.

Torque: 7.4 N–m (75 kgf–cm, 65 in.–lbf)

5. INSTALL DRAIN PLUG

Torque: the drain plug.

Torque: 20 N–m (205 kgf–cm, 15 ft–lbf)

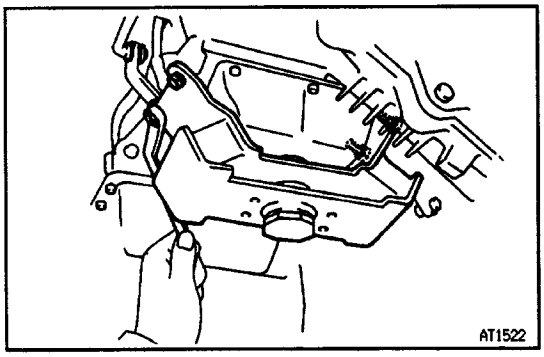

6. INSTALL MEMBER BRACKET TO TRANSFER

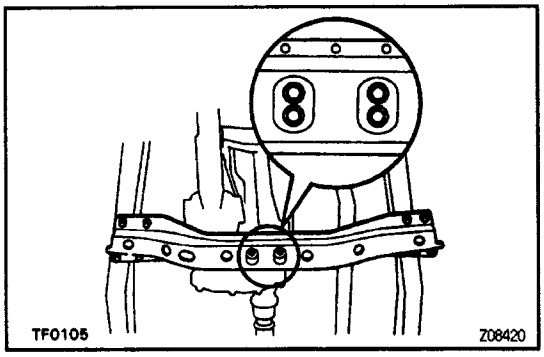

7. INSTALL REAR SUPPORT MEMBER

(a) Raise the transmission slightly with a jack.

(b) Install the rear support member to the side frame with the bolts. Torque the bolts.

Torque: 95 N–m (970 kgf–cm, 70 ft–lbf)

(c) Lower the transmission and transfer.

(d) Install the 4 mounting bolts to the engine rear mounting. Torque the bolts.

Torque: 13 N–m (130 kgf–cm, 9 ft–lbf)

8. REMOVE TRANSMISSION JACK

9. FILL TRANSMISSION WITH ATF

(See page AT2–24)

NOTICE: Do not overfill.

Fluid type:

ATF DEXRON II

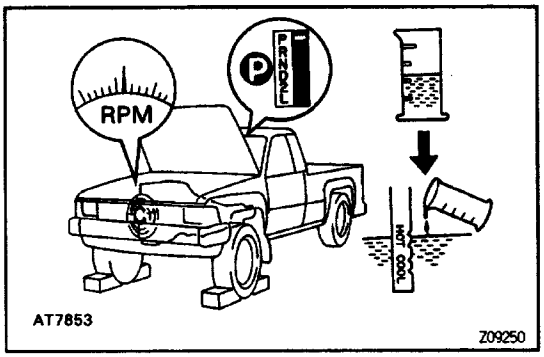

10. CHECK FLUID LEVEL

TROUBLESHOOTING

BASIC TROUBLESHOOTING

Before troubleshooting an electronically controlled transmission first determine whether the problem is electrical or mechanical. To do this, just refer to the basic troubleshooting flow–chart provided below. If the cause is already known, using the basic troubleshooting chart below along with the general troubleshooting chart on the following pages should speed the procedure.

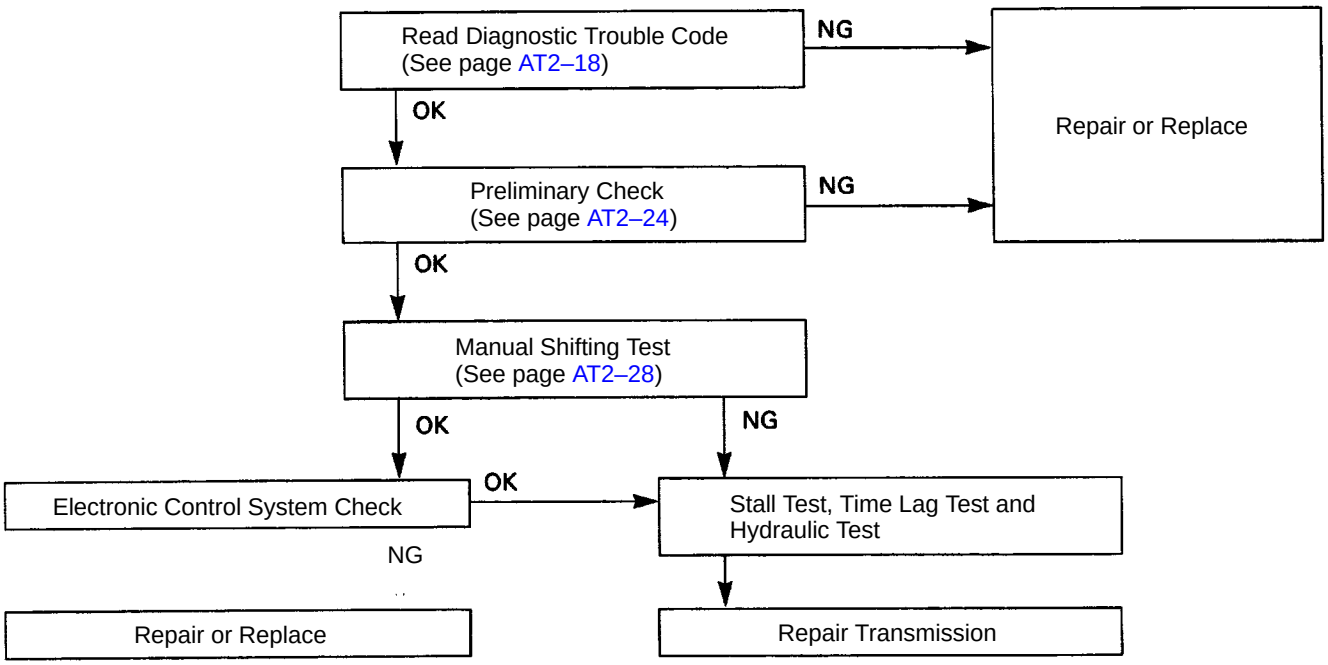

NOTICE: Refer to A340E, A340F, A340H Automatic Transmission Repair Manual (Pub. No. RM391 U) when ★ mark appears in the column for page numbers.

Problem	Possible Cause	Remedy	Page
Fluid discolored or smells burnt	Fluid contaminated Torque converter clutch faulty Transmission faulty	Replace fluid Replace torque converter clutch Disassemble and inspect transmission	AT2–24 AT2–72 ★
Vehicle does not move in any forward position of reverse	Manual linkage out of adjustment Valve body or primary regulator faulty Parking lock pawl faulty Torque converter clutch faulty Converter drive plate broken Oil pump intake screen blocked Transmission faulty	Adjust linkage Inspect valve body Inspect parking lock pawl Replace torque converter clutch Replace drive plate Clean screen Disassemble and inspect transmission	AT2–26 ★ AT2–70 AT2–72 AT2–75 ★ ★
Shift lever position incorrect	Manual linkage out of adjustment Manual valve and lever faulty Transmission faulty	Adjust linkage Inspect valve body Disassemble and inspect transmission	AT2–26 ★ ★
Harsh engagement into any drive position	Throttle cable out of adjustment Valve body or primary regulator faulty . Accumulator piston faulty Transmission faulty	Adjust throttle cable Inspect valve body Inspect accumulator pistons Disassemble and inspect transmission	AT2–26 ★ ★ ★
Delayed 1–2, 2–3 or 3–O/D up–shift, or down–shift, from O/D–3 or 3–2 and shifts back to O/D or 3	Electronic control faulty Valve body faulty Solenoid valve faulty	Inspect electronic control Inspect valve body Inspect solenoid valve	AT2–30 ★ AT2–39
Slips on 1–2, 2–3 or 3–O/D up–shift, or slips or shudders on acceleration	Manual linkage out of adjustment Throttle cable out of adjustment Valve body faulty Solenoid valve faulty Transmission faulty	Adjust linkage Adjust throttle cable Inspect valve body Inspect solenoid valve Disassemble and inspect transmission	AT2–26 AT2–26 ★ AT2–39 ★
Drag, binding or tie–up on 1–2, 2–3 or 3–0/D up–shift	Manual linkage out of adjustment Valve body faulty Transmission faulty	Adjust linkage Inspect valve body Disassemble and inspect transmission	AT2–26 ★ ★

NOTICE: Refer to A340E, A340F, A340H Automatic Transmission Repair Manual (Pub. No. RM391 U) when ★ mark appears in the column for page numbers.

Problem	Possible cause	Remedy	Page
No lock–up in 2nd, 3rd or O/D	Electronic control faulty Valve body faulty Solenoid valve faulty Transmission faulty	Inspect electronic control Inspect valve body Inspect solenoid valve Disassemble and inspect transmission	AT2–30 ★ ★ ★
Harsh down–shift	Throttle cable out of adjustment Throttle cable and cam faulty Accumulator pistons faulty Valve body faulty Transmission faulty	Adjust throttle cable Inspect throttle cable and cam Inspect accumulator pistons Inspect valve body Disassemble and inspect transmission	AT2–26 AT2–67 ★ ★ ★
No down–shift when coasting	Valve body faulty Solenoid valve faulty Electronic control faulty	Inspect valve body Inspect solenoid valve Inspect electronic control	★ ★ AT2–30
Down–shift occurs too quickly or too late while coasting	Throttle cable faulty Valve body faulty Transmission faulty Solenoid valve faulty Electronic control faulty	Inspect throttle cable Inspect valve body Disassemble and inspect transmission Inspect solenoid valve Inspect electronic control	AT2–26 ★ ★ ★ AT2–30
No O/D–3, 3–2 or 2–1 kick–down	Solenoid valve faulty Electronic control faulty Valve body faulty	Inspect solenoid valve Inspect electronic control Inspect valve body	★ AT2–30 ★
No engine braking in 2 or L position	Solenoid valve faulty Electronic control faulty Valve body faulty Transmission faulty	Inspect solenoid valve Inspect electronic control Inspect valve body Disassemble and inspect transmission	★ AT2–30 ★ ★
Vehicle does not hold in P	Manual linkage out of adjustment Parking lock pawl cam and spring faulty	Adjust linkage Inspect cam and spring	AT2–26 AT2–70
No H2–H4, H4–L4, L4–H4 or H4–H2 change gear position of transfer	Transfer linkage out of adjustment Electronic control faulty Transfer valve body faulty Transfer faulty	Adjust linkage Inspect electronic control Inspect valve body Disassemble and inspect transfer	AT2–26 AT2–30 ★ ★

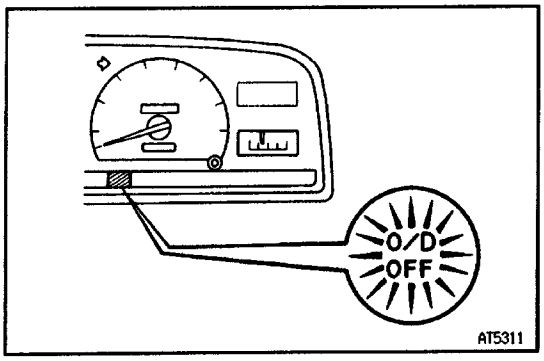

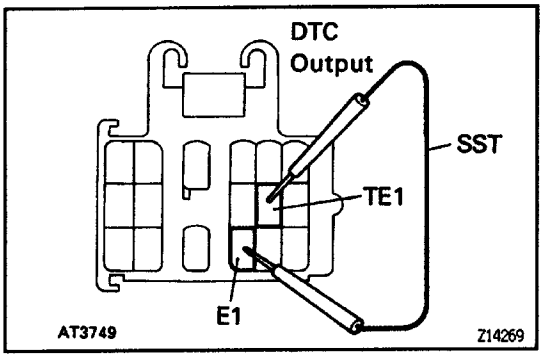

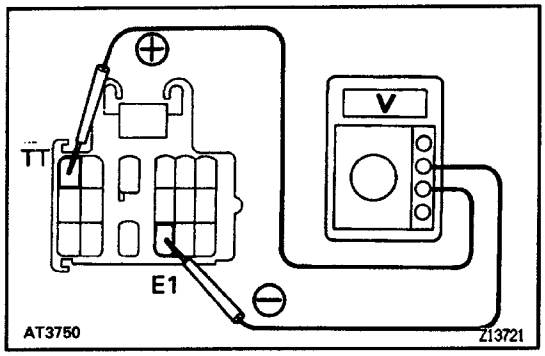

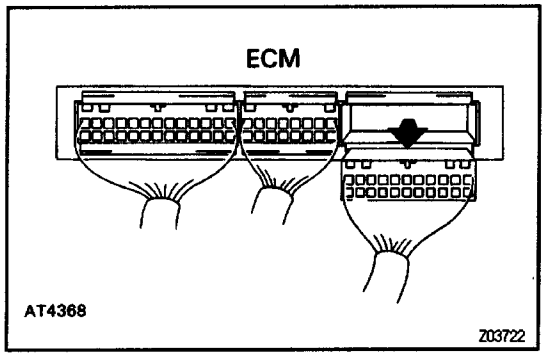

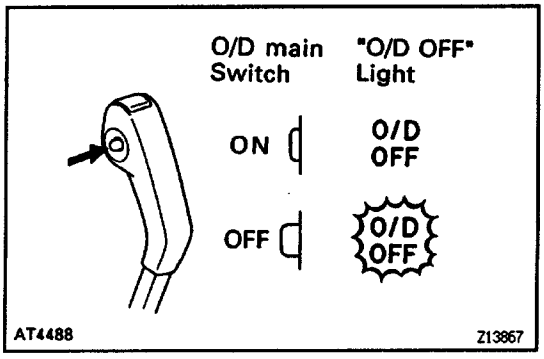

DIAGNOSTIC SYSTEM

DESCRIPTION

1. A self–diagnosis function is built into the electrical control system. Warning is indicated by the 0/D OFF indicator light.
   HINT: Warning and DTC can be read only when the O/D main switch is ON. If OFF, the O/D OFF light is lit continuously and will not blink.
   (a) If a malfunction occurs within the vehicle speed sen–sors (No. 1 or 2) or solenoids (No. 1, 2 or 4), the O/D OFF light will blink to warn the driver.
   However, there will be no warning of a malfunction with lock–up solenoid.
   (b) The DTC can be read by the number of blinks of the O/D OFF indicator light when terminals TE1 and E1 are connected with SST.
   (See page AT2–18)
   (c) The throttle position sensor or brake signal are not indicated, but inspection can be made by checking the voltage at terminal TT of the DLC1.
   (d) The signals to each gear can be checked by mea-suring the voltage at terminal TT of the DLC1 while driving.
2. The DTC is retained in memory by the ECM and due to back – up voltage, is not canceled out when the engine is turned oft. Consequently, after repair, it is necessary to turn the ignition switch off and cancel out the DTC.
   (See page AT2–20)
   HINT:
   - Low battery voltage will cause faulty operation of the diagnosis system. Therefore, always check the battery first.
   - Use a voltmeter and ohmmeter that have an imped-ance of at least 10 kΩ/V.

CHECK ”O/D OFF INDICATOR LIGHT

1. Turn the ignition switch ON.
2. The ’O/D OFF” light will come on when the O/D is switched OFF.
3. When the O/D main switch is set to ON, the ”O/D OFF” light should go out.
   If the ”O/D OFF” light flashes when the O/D main switch is set to ON, the electronic control system is faulty.

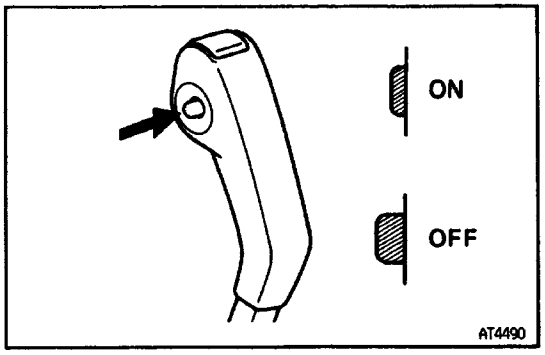

READ DIAGNOSTIC TROUBLE CODE

1. TURN IGNITION SWITCH AND O/D MAIN SWITCH TO ON

Do not start the engine.

HINT: Warning and DTC can be read only when the O/D main switch is ON. If OFF, the O/D OFF light will light continuously and will not blink.

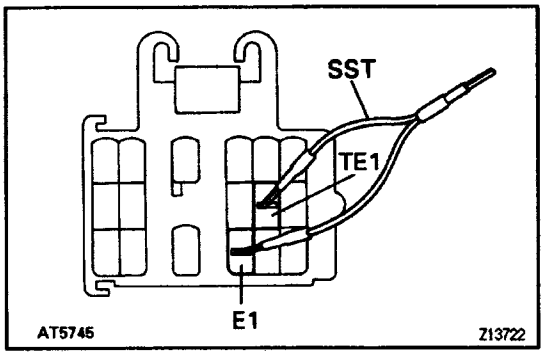

2. CONNECT TE1 TERMINALS OF DLC1

Using SST, connect terminals TE1 and El.

SST 09843–18020

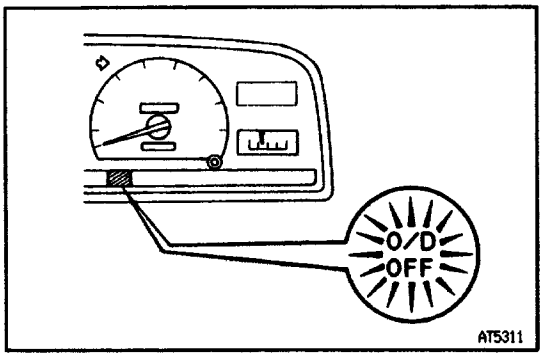

3. READ DIAGNOSTIC TROUBLE CODE

Read the DTC is indicated by the number of times the O/D OFF tight flashes.

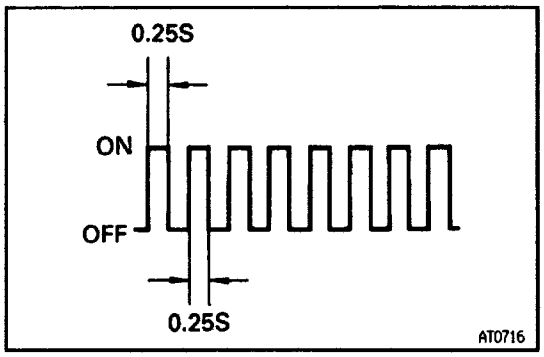

Diagnostic Trouble Code Indication

- **If the system is operating normally, the light will flash 2 times per second.**

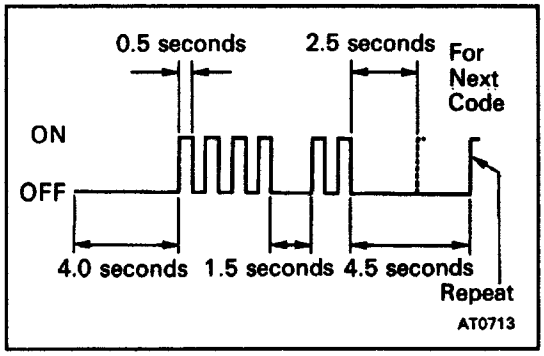

- In the event of a malfunction, the light will flash 1 time per second. The number of blinks will equal the first number and, after 1.5 seconds pause, the second number of the 2 digit diagnostic trouble code. If there are 2 or more codes, there will be a 2.5 seconds pause between each.

HINT: In the event of several trouble codes occurring si–multaneously, indication will begin from the smaller val–ue and continue to the larger.

4. REMOVE SST

DIAGNOSTIC TROUBLE CODE

Code No.	Light Pattern	Diagnosis System
–		Normal
42		Defective No. 1 vehicle speed sensor (in combination meter) – severed wire harness or short circuit
61		Defective No. 2 vehicle speed sensor (in ATM)– severed wire harness or short circuit
62		Severed No. 1 solenoid or short circuit – severed wire harness or short circuit
63		Severed No.2 solenoid or short circuit – severed wire harness or short circuit
64		Severed lock–up solenoid or short circuit – severed wire harness or short circuit
65	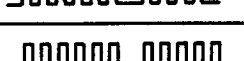	Severed No.4 solenoid or short circuit – severed wire harness or short circuit

HINT: If codes 62, 63, 64 or 65 appear, there is an electrical malfunction in the solenoid.
Causes due to mechanical failure, such as a stuck valve, will not appear.

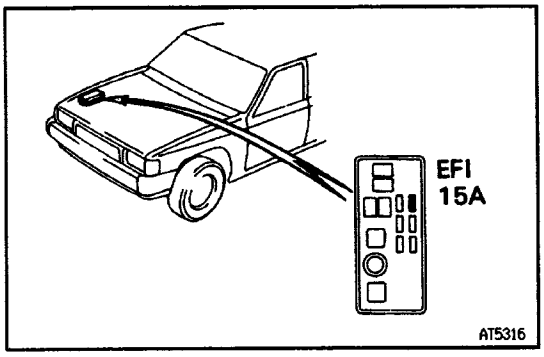

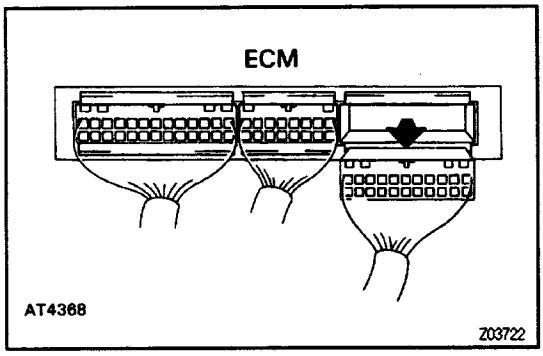

CANCEL OUT DIAGNOSTIC TROUBLE CODE

1. After repair of the trouble area, the DTC retained in memory by the ECM must be canceled by removing the EFI fuse (15A) for 10 seconds or more, depending on ambient temperature (the lower the temperature, the longer the fuse must be left out) with the ignition switch OFF.

   HINT:

   - Cancellation can be also done by removing the negative (–) terminal cable of the battery, but in this case other memory systems will be also canceled out.
   - The DTC can be also canceled out by disconnecting the ECM connector.
   - If the DTC is not canceled out, it will be retained by the ECM and appear along with a new code in event of future trouble.
2. After cancellation, perform a road test to confirm that a ”normal code” is now read on the O/D OFF indicator light.

TROUBLESHOOTING FLOW–CHART

HINT:

- If DTC Nos. 42, 61, 62, 63 or 65 are output, the overdrive OFF indicator light will begin to blink immediately to warn the driver. However, an impact or shock may cause the blinking to stop; but the code will still be retained in the ECM memory unit canceled out.
- There is no warning for DTC No. 64.
- In the event of a simultaneous malfunction of both No.1 and No.2 vehicle speed sensors, no DTC will appear and the fail–safe system will not function. However, when driving in the D position, the transmission will not up–shift from first gear, regardless of the vehicle speed.

Diagnostic trouble code 42 (No. 1 vehicle speed sensor circuitry)

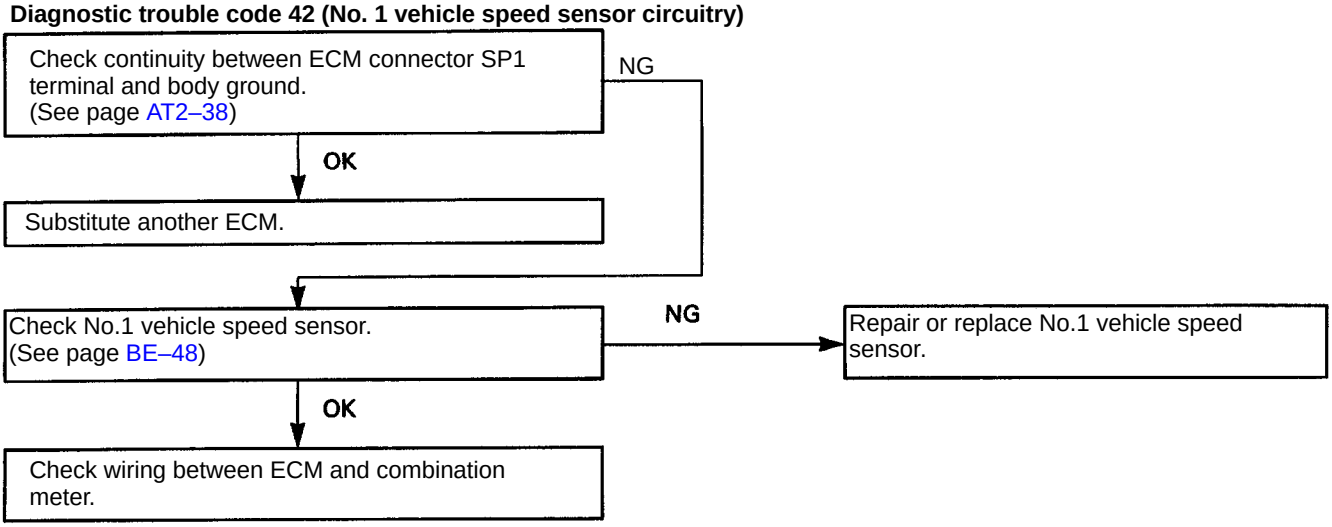

Diagnostic trouble code 61 (No.2 vehicle speed sensor circuitry)

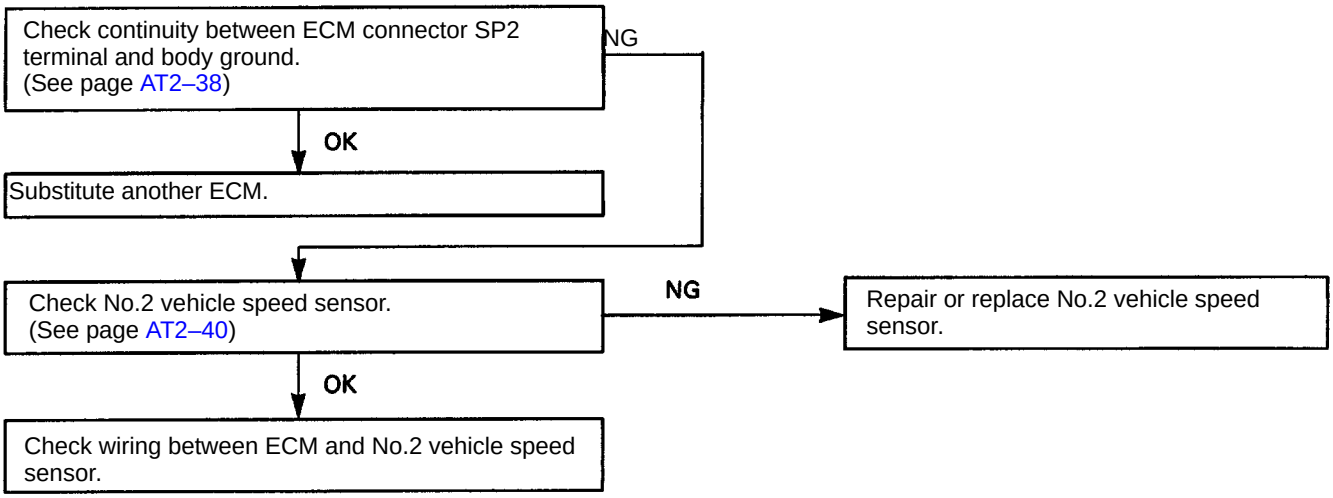

Diagnostic trouble code 62 (No. 1 solenoid valve circuitry)

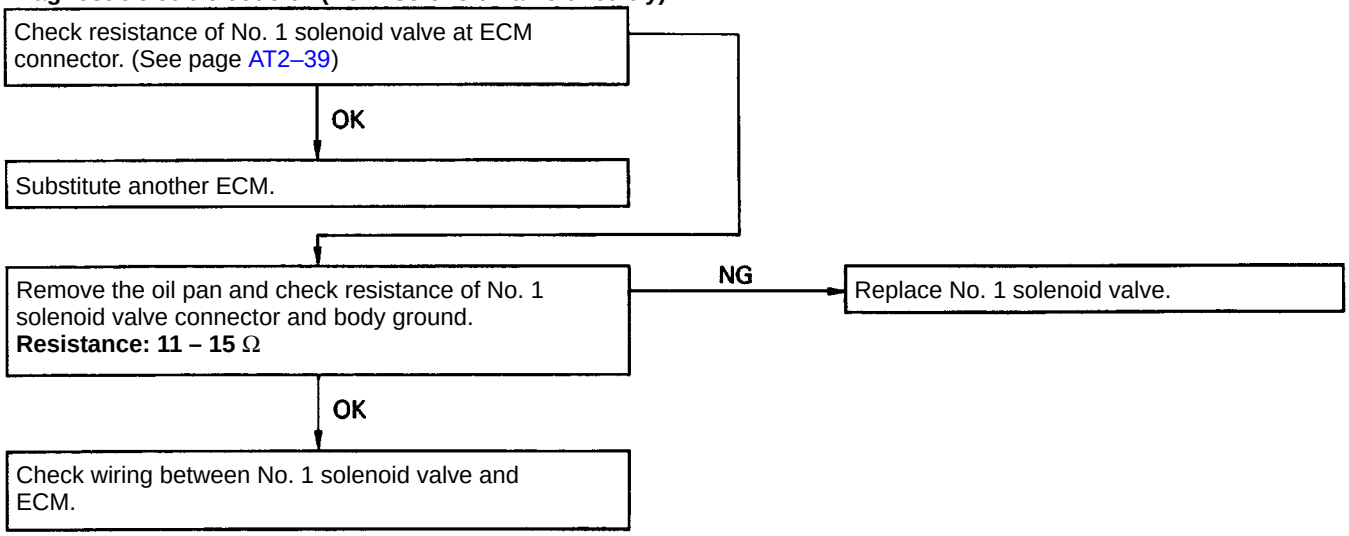

Diagnostic trouble code 63 (No. 2 solenoid valve circuitry)

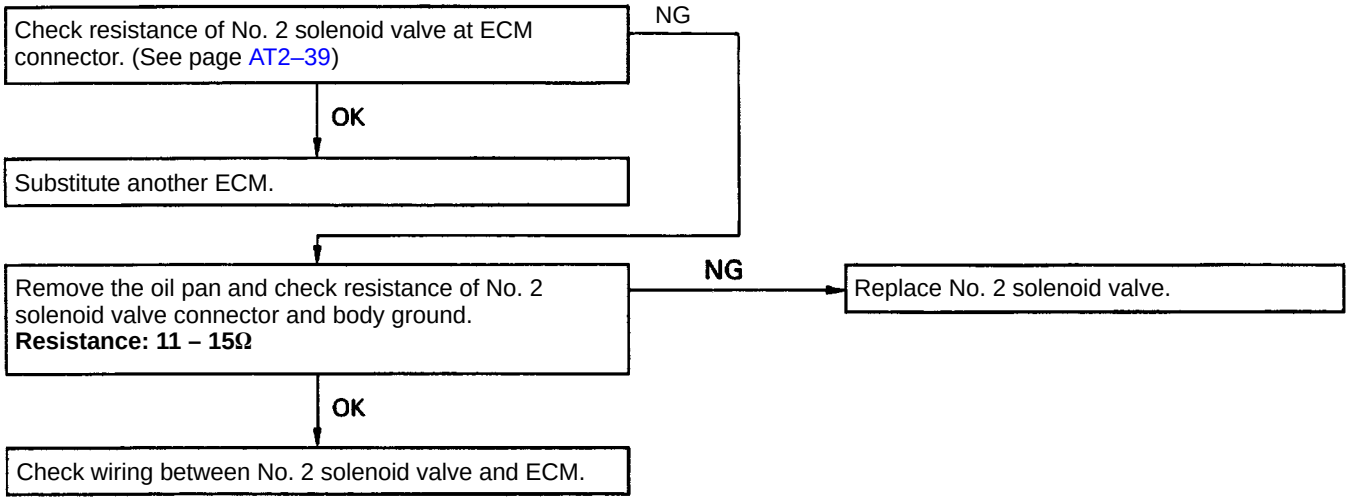

Diagnostic trouble code 64 (Lock–up solenoid valve circuitry)

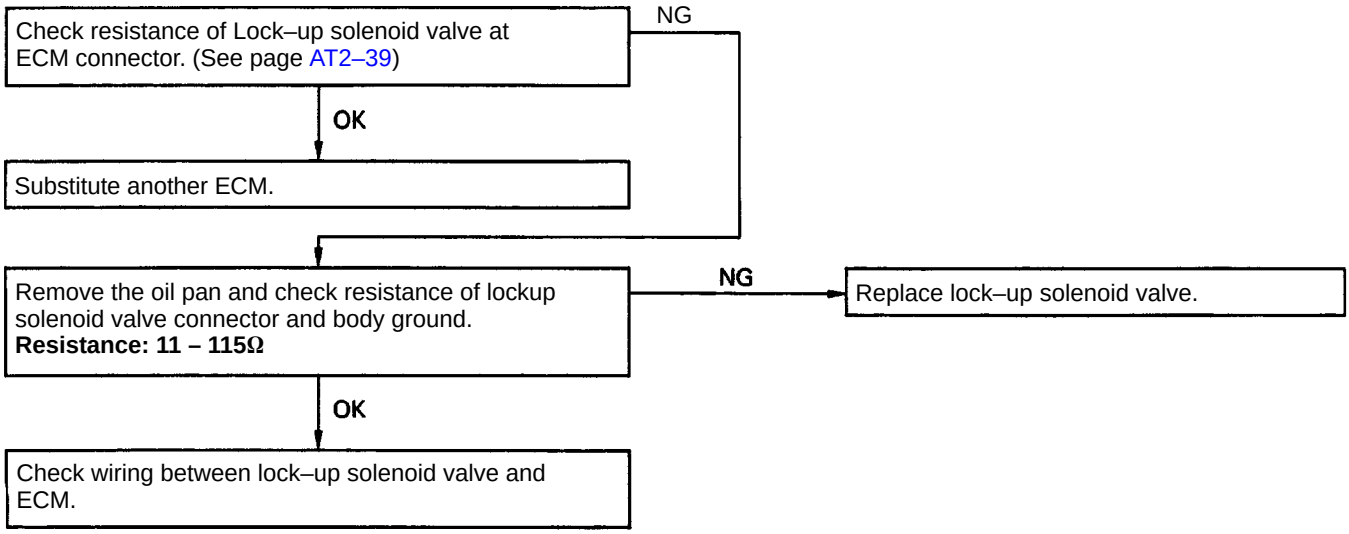

Diagnostic trouble code 65 INo.4 solenoid valve circuitry)

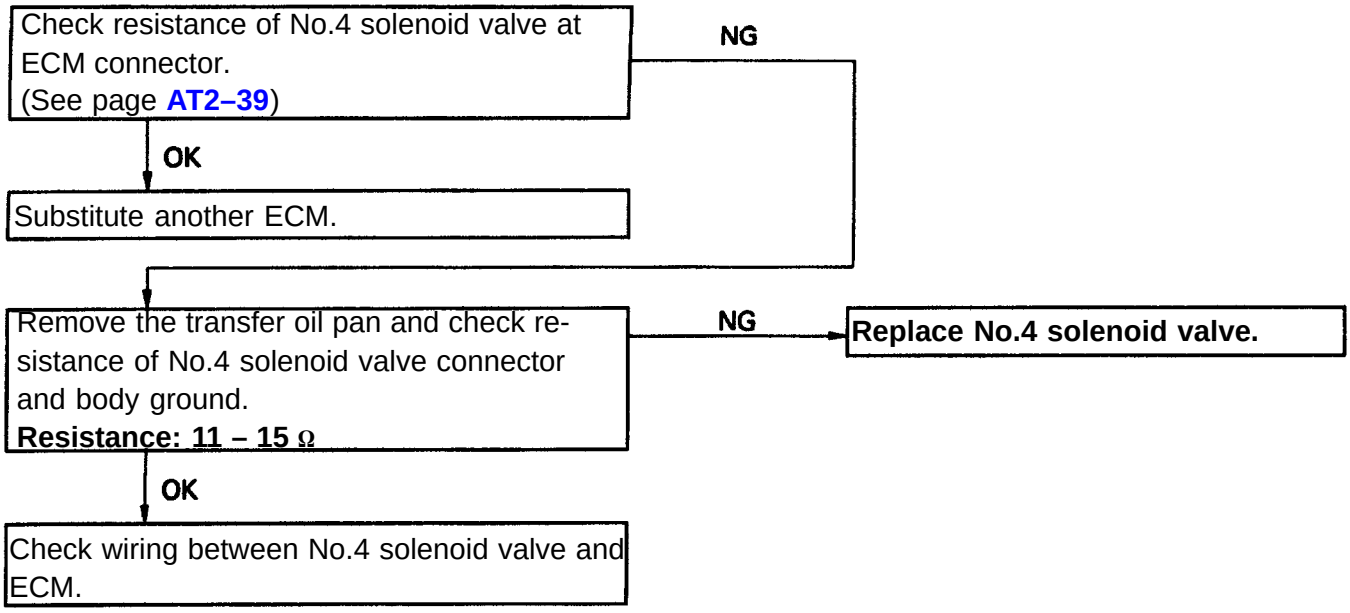

PRELIMINARY CHECK

1. CHECK FLUID LEVEL

Transmission and transfer case:

HINT:

- The vehicle must have been driven so that the engine and transmission are at normal operating temperature.

Fluid temperature: 70–80˚C (158–176˚F)

- Only use the COOL range on the dipstick as a rough reference when the fluid is replaced or the engine does not run.

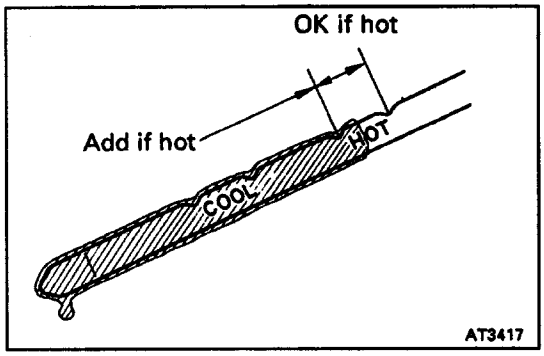

(a) Park the vehicle on a level surface, set the parking brake.

(b) With the engine idling, shift the shift lever into all positions from P to L position and return to P position.

(c) Pull out the transmission dipstick and wipe it clean.

(d) Push it back fully into the pipe.

(e) Pull it out and check that the fluid level is in the HOT range.

If the level is at the low side, add fluid.

Fluid type:

ATF DEXRON II

NOTICE: Do not overfill.

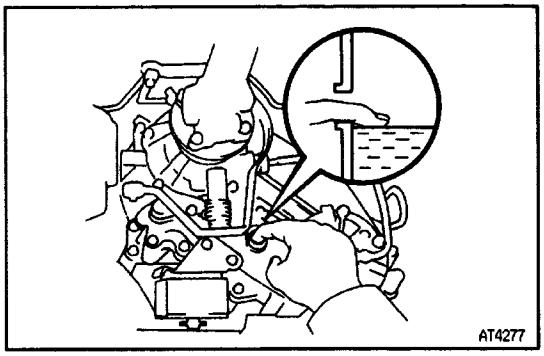

Transfer chain case:

Remove the filler plug and feel inside the hole with your finger. Check that the oil comes to within 10 mm (0.39 in.) of the bottom edge of the hole.

If the level is low, add fluid until it begins to run out of the filler hole.

Fluid type:

ATF DEXRON II

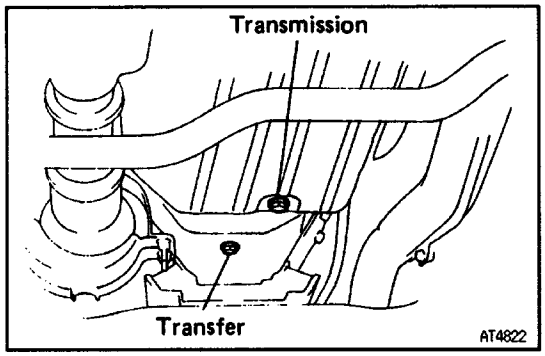

2. CHECK FLUID CONDITION

If the fluid smells burnt or is black, replace it as following procedures.

Transmission and transfer case:

(a) Remove the drain plugs and drain the fluid.

(b) Reinstall the drain plugs securely.

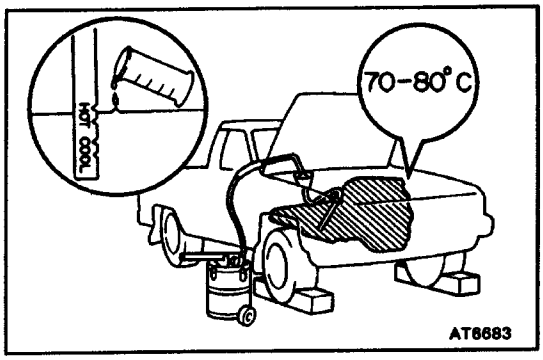

(c) With the engine OFF, add new fluid through the oil filler pipe.

Fluid type:

ATF DEXRON II

Capacity:

	Transmission liter (US qts, Imp. qts)	Transfer liter (US qts, Imp. qts)
Drain and refill	**4.5 (4.8, 4.0)**	**0.8 (0.8, 0.7)**
Dry fill	**10.3 (10.9, 9.1)**	**1.1 (1.2, 1.0)**

(d) Start the engine and shift the shift lever into all positions from P to L position and then shift into P position.

(e) With the engine idling, check the fluid level. Add fluid up to the COOL level on the dipstick.

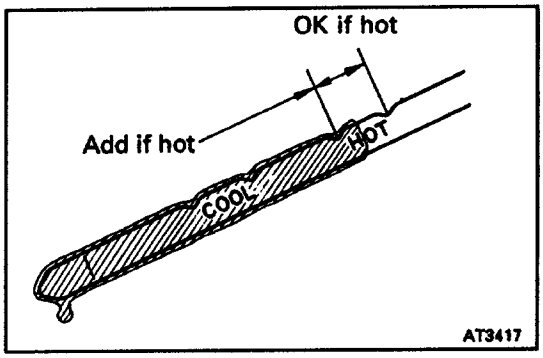

(f) Check the fluid level with the normal operating temperature 70–80˚C (158 – 176˚F) and add as necessary.

NOTICE: Do not overfill.

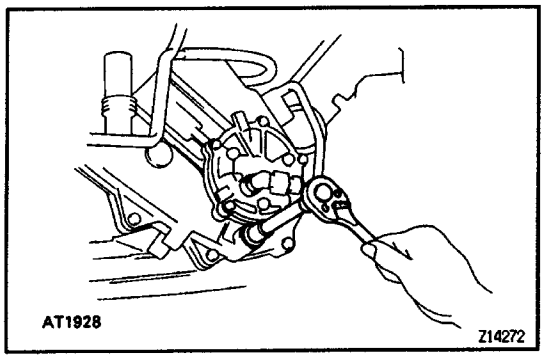

Transfer chain case:

(a) Remove the transfer under cover.

(b) Remove the drain plug with a hexagon wrench and drain the fluid.

(c) Reinstall the drain plug securely with a hexagon wrench.

(d) With the engine OFF, add new fluid through the filler hole.

Capacity:

Dry fill – 1.1 liters (1.2 US qts. 1.0 Imp. qts)

Drain and refill – 0.8 liters (0.8 US qts, 0.7 Imp. qts)

(e) Check the fluid level.

(f) Install the transfer under cover.

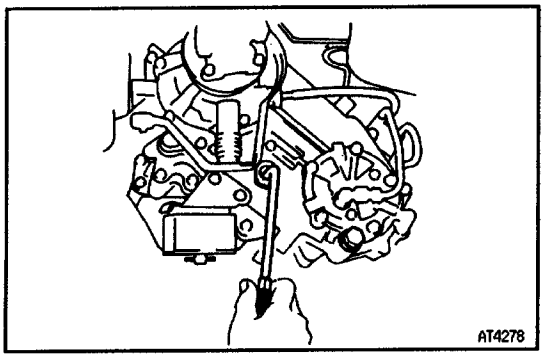

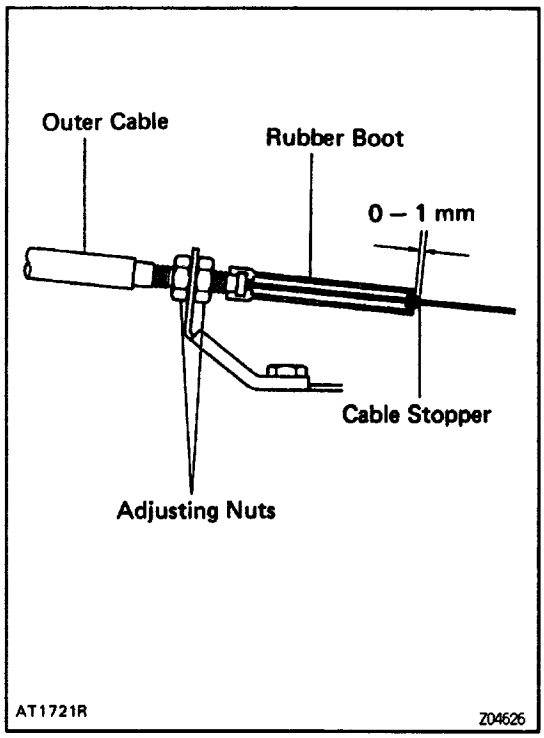

3. INSPECT THROTTLE CABLE

(a) Depress the accelerator pedal all the way and check that the throttle valve opens fully.

HINT: If the valve does not open fully, adjust the accelera–tor cable.

(b) Fully depress the accelerator pedal.

(c) Measure the distance between the end of the boot and stopper on the cable.

Standard distance:

0 – 1 mm (0 – 0.04 in.)

If the distance is not standard, adjust the cable by the a justing nuts.

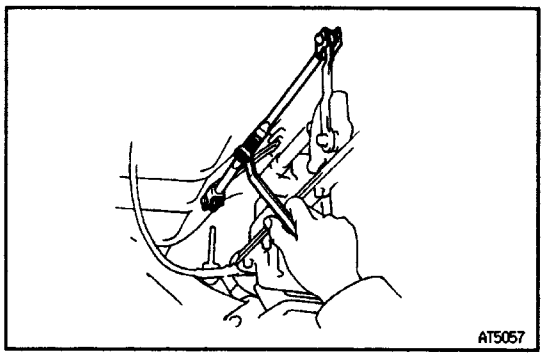

4. INSPECT TRANSMISSION SHIFT LEVER POSITION

When shifting the shift lover from the N position to other positions, check that the lever can be shifted smoothly and accurately to each position and that the position indi-cator correctly indicates the position.

If the indicator is not aligned with the correct position, carry out the following adjustment procedures.

(a) Loosen the nuts on the transmission control rod.

(b) Push the control shaft lever fully rearward.

(c) Return the control shaft lever 2 notches to N posi-tion.

(d) Set the shift lever to N position.

(e) While holding the shift lever lightly toward the R position side, tighten the nuts.

(f) Start the engine and make sure that the vehicle moves forward when shifting the lever from the N to D position and reverse when shifting it to the R posi-tion.

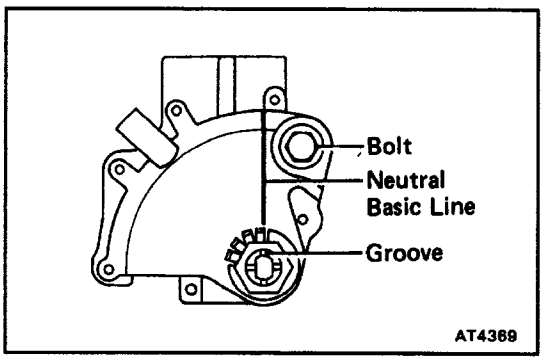

5. INSPECT PARK/NEUTRAL POSITION SWITCH

Check that the engine can be started with the shift lever only in the N or P position, but not in other positions.

If not as stated above, carry out the following adjustment procedures.

(a) Loosen the park/neutral position switch bolt and set the shift lever to the N position.

(b) Align the groove and neutral basic line.

(c) Hold in position and tighten the bolt.
Torque: 13 N–m (130 kgf–cm, 9 ft–lbf)

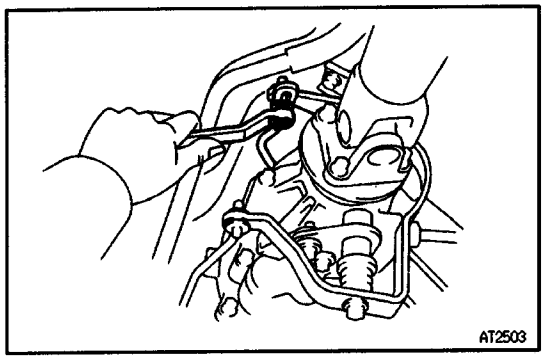

6. INSPECT TRANSFER SHIFT LEVER POSITION

When shifting the shift lever from H2 position to H4 and L4 positions, check that the lever can be shifted smoothly and accurately to each position and that the position indicator correctly indicates the position.

If the indicator is not aligned with the correct position, carry out the following adjustment procedures.

(a) Loosen the nut on the cross shaft.
(b) Push the control shaft lever fully forward.
(c) Return the control shaft lever 1 notch to H4 position.
(d) Set the shift lever 4 position.
(e) While holding the shift lever lightly toward the L4 position side, tighten the nut.

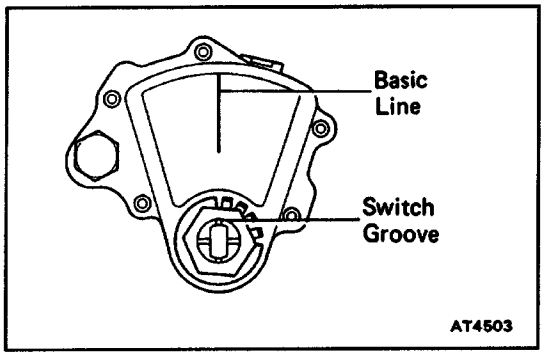

7. INSPECT TRANSFER POSITION SWITCH

If necessary, carry out the following adjustment procedures.

(a) Loosen the transfer position switch bolt and set the transfer shift lever to the H4 position.
(b) Align the groove and H4 basic line.
(c) Hold in position and tighten the bolt.
Torque: 13 N–m (130 kgficm, 9 ft–lbf)

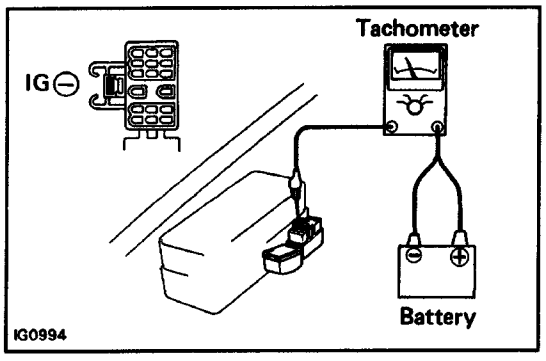

8. INSPECT IDLE SPEED

Connect a tachometer test probe to the data link connector 1 terminal (E), inspect the idle speed.

Idle speed:

800 ± 50 rpm (in N position and air conditioner OFF)

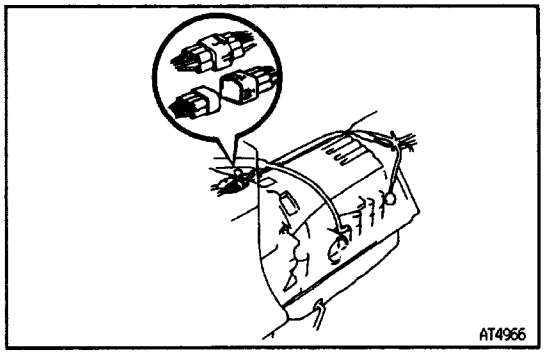

MANUAL SHIFTING TEST

HINT: With this test, it can be determined whether the trouble lies within the electrical circuit or is a mechanical problem in the transmission.

1. **DISCONNECT SOLENOID WIRE**
2. **INSPECT MANUAL DRIVING OPERATION**

Check that the shift and gear positions correspond with the table below.

Transmission						Transfer (Reference)		
Shift position	D	2	L	R	P	H2	H4	L4
Gear position	O/D	3rd	1st	Reverse	Pawl Lock	High Gear 2WD	High Gear 4WD	High Gear 4WD

HINT: If the L, 2 and D position gear positions are difficult to distinguish, perform the following road test.

- While driving, shift through the L, 2 and D positions. Check that the gear change corresponds to the shift position.

If any abnormality is found in the above test, the problem lies in transmission itself.

3. **CONNECT SOLENOID WIRE**
4. **CANCEL OUT DIAGNOSTIC TROUBLE CODE**

(See page AT2–20)

REFERENCE: Possible gear positions in accordance with solenoid operating conditions.

Position	NORMAL			NO.1 SOLENOID MALFUNCTIONING			NO.2 SOLENOID MALFUNCTIONING			BOTH SOLENOIDS MALFUNCTIONING		
	Solenoid Valve		Gear Position	Solenoid Valve		Gear Position	Solenoid Valve		Gear Position	Solenoid Valve		Gear Position
	No. 1	No.2		No. 1	No.2		No. 1	No.2		No. 1	No.2	
D position	ON	OFF	1st	X	ON	3rd	ON	X	1st	X	X	O/D
	ON	ON	2nd	X	ON	3rd	OFF	X	O/D	X	X	O/D
	OFF	ON	3rd	X	ON	3rd	OFF	X	O/D	X	X	O/D
	OFF	OFF	O/D	X	OFF	O/D	OFF	X	O/D	X	X	O/D
2 position	ON	OFF	1st	X	ON	3rd	ON	X	1st	X	X	3rd
	ON	ON	2nd	X	ON	3rd	OFF	X	3rd	X	X	3rd
	OFF	ON	3rd	X	ON	3rd	OFF	X	3rd	X	X	3rd
L position	ON	OFF	1st	X	OFF	1st	ON	X	1st	X	X	1st
	ON	ON	2nd	X	ON	2nd	ON	X	1st	X	X	1st

X: Malfunctions

ELECTRONIC CONTROL SYSTEM

PRECAUTION

Do not open the cover or the case of the ECM and various ECU unless absolutely necessary. (If the IC terminals are touched, the IC may be destroyed by static electricity.)

ELECTRONIC CONTROL CIRCUIT

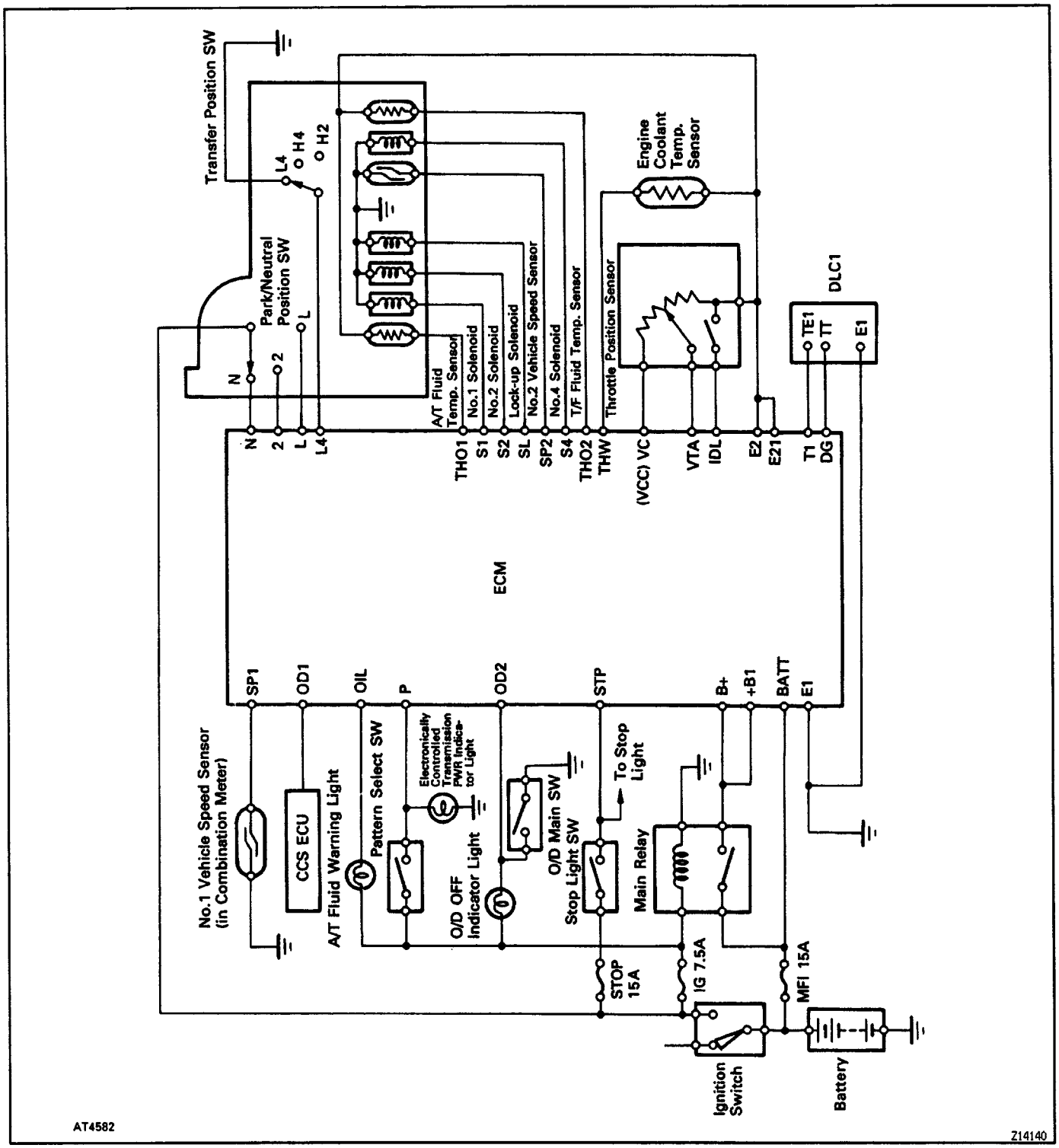

ELECTRONIC CONTROL COMPONENTS

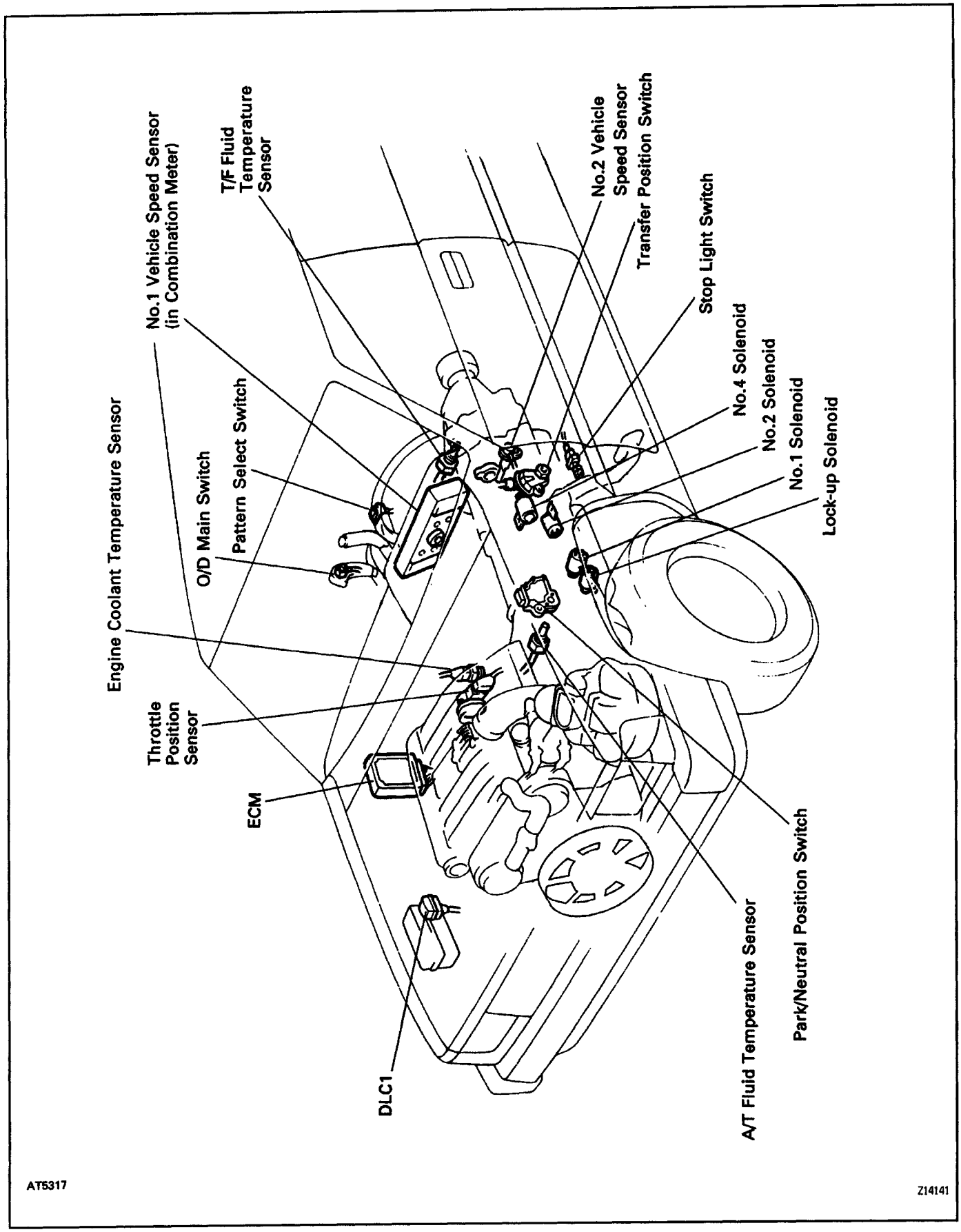

TROUBLESHOOTING FLOW–CHART

Trouble No. 1 No Shifting

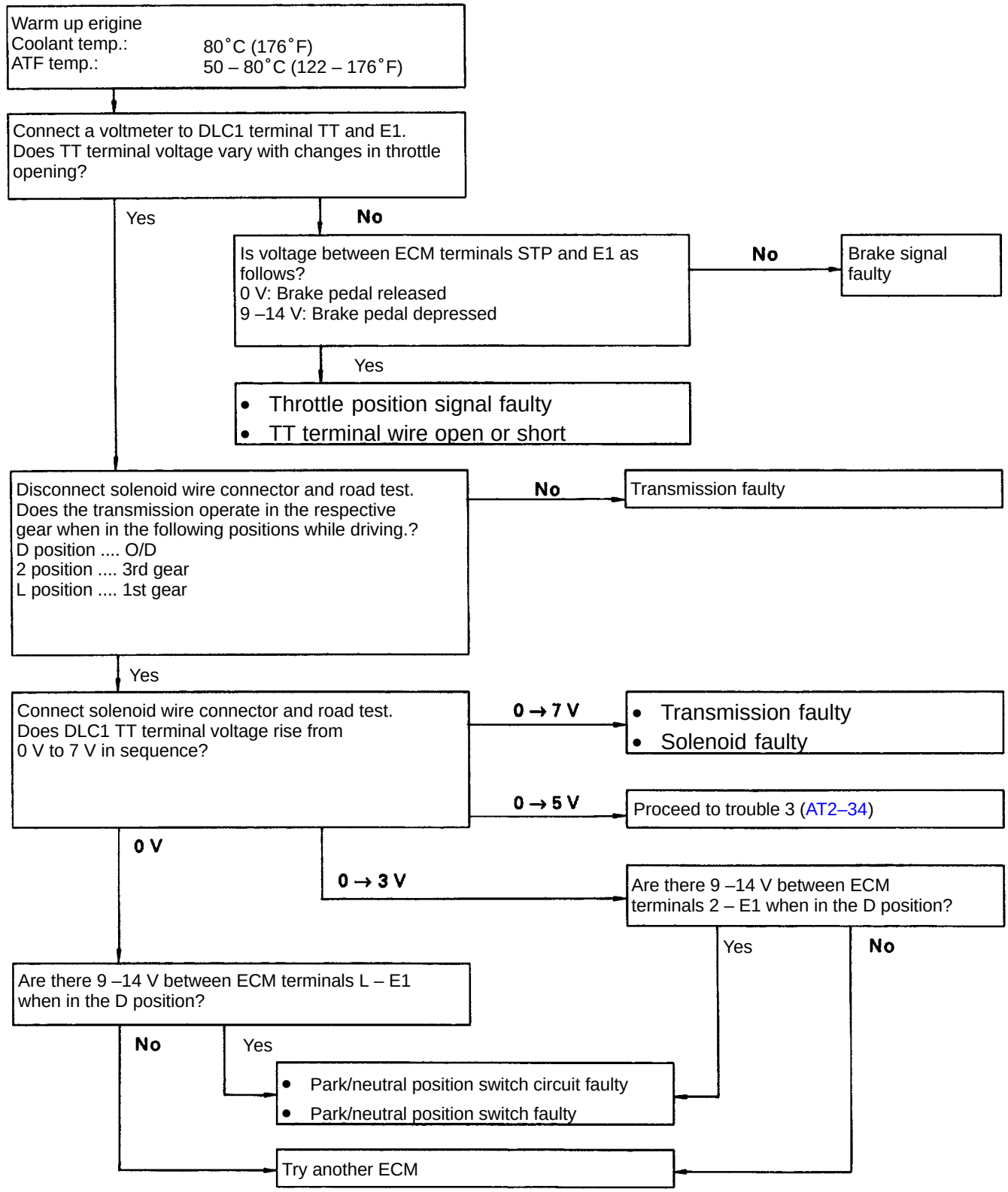

Trouble No.2 Shift point too high or too low

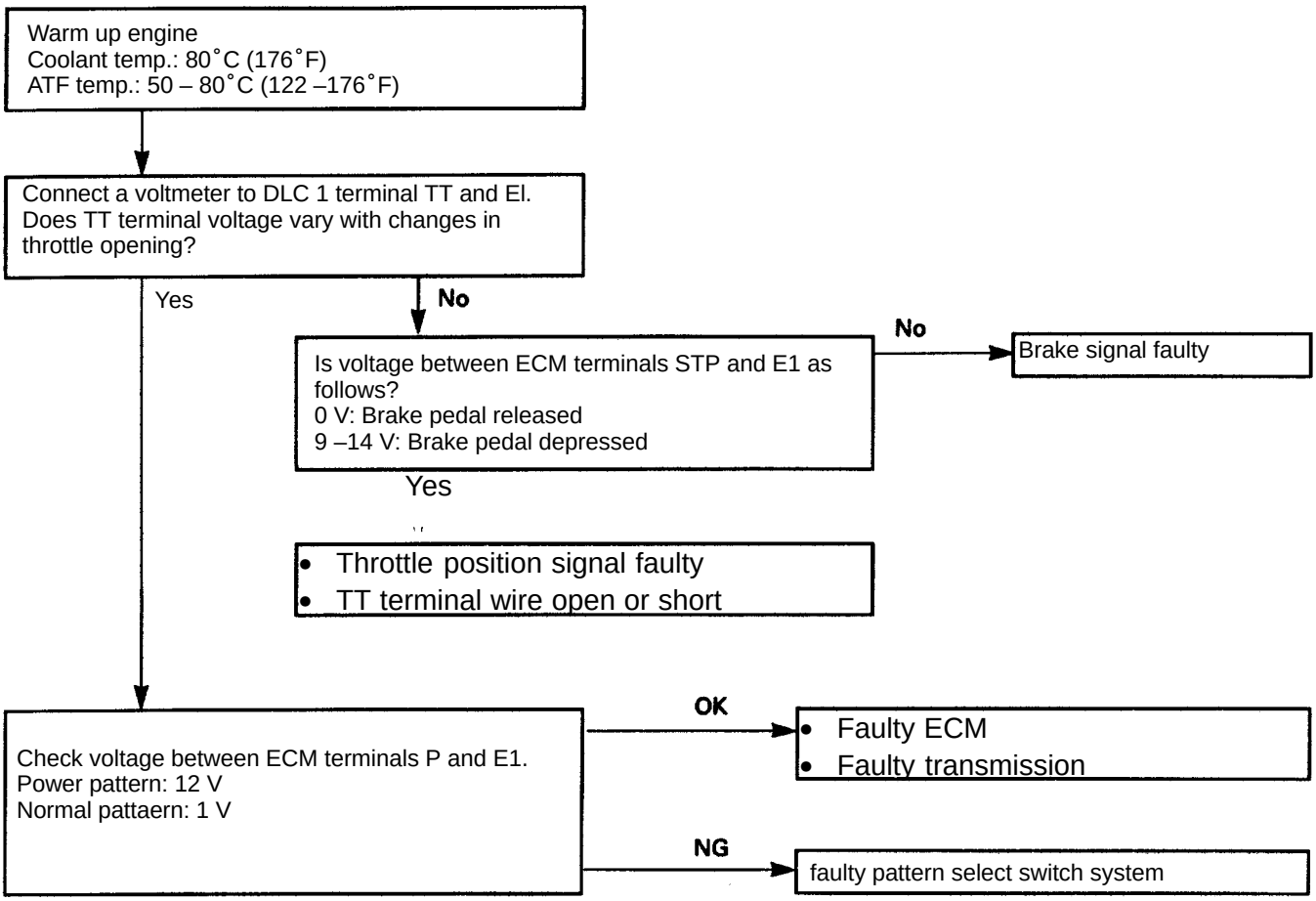

Trouble No.3 No up–shift to overdrive (After warm–up)

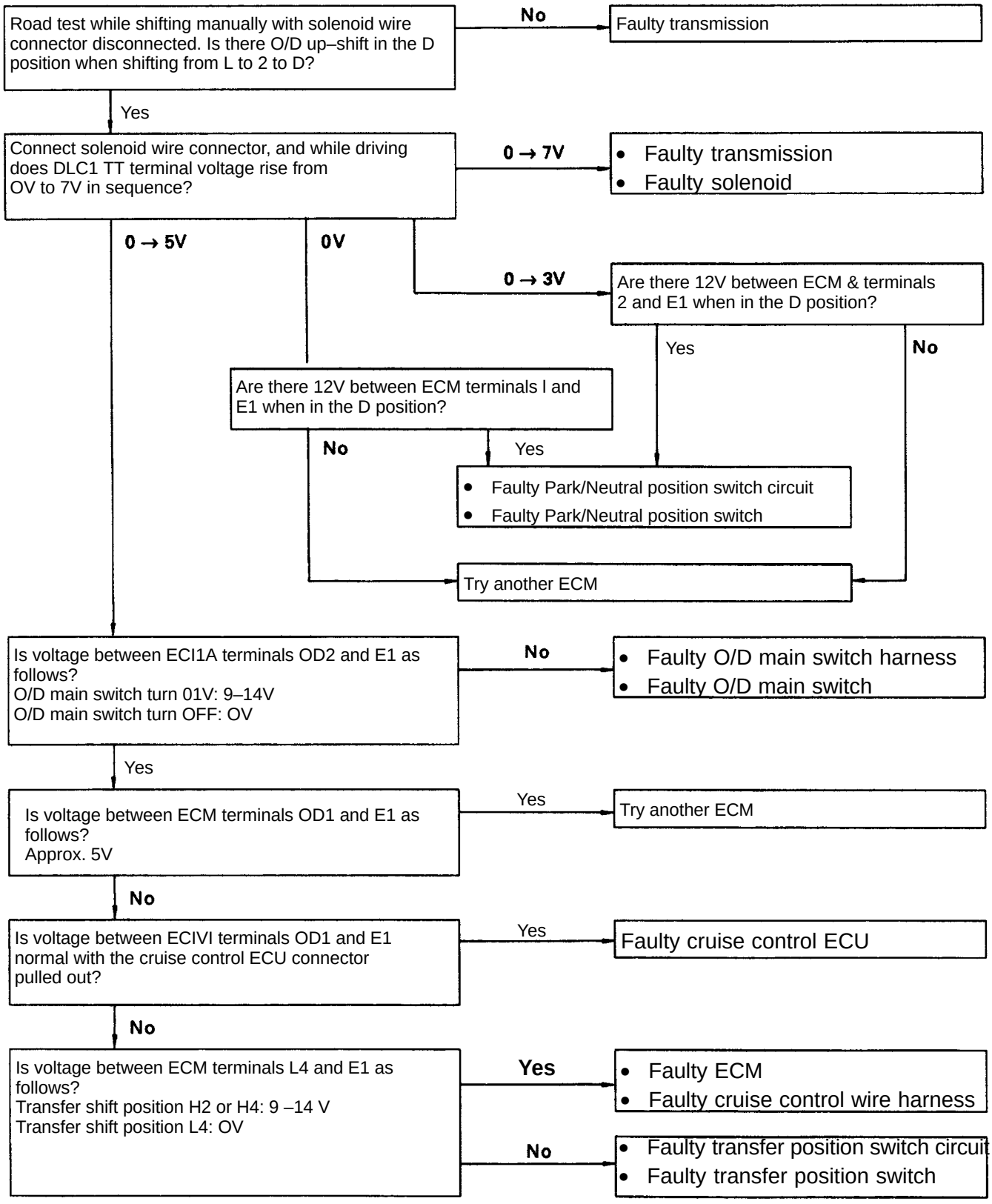

Trouble No.4 No lock–up (After warm–up)

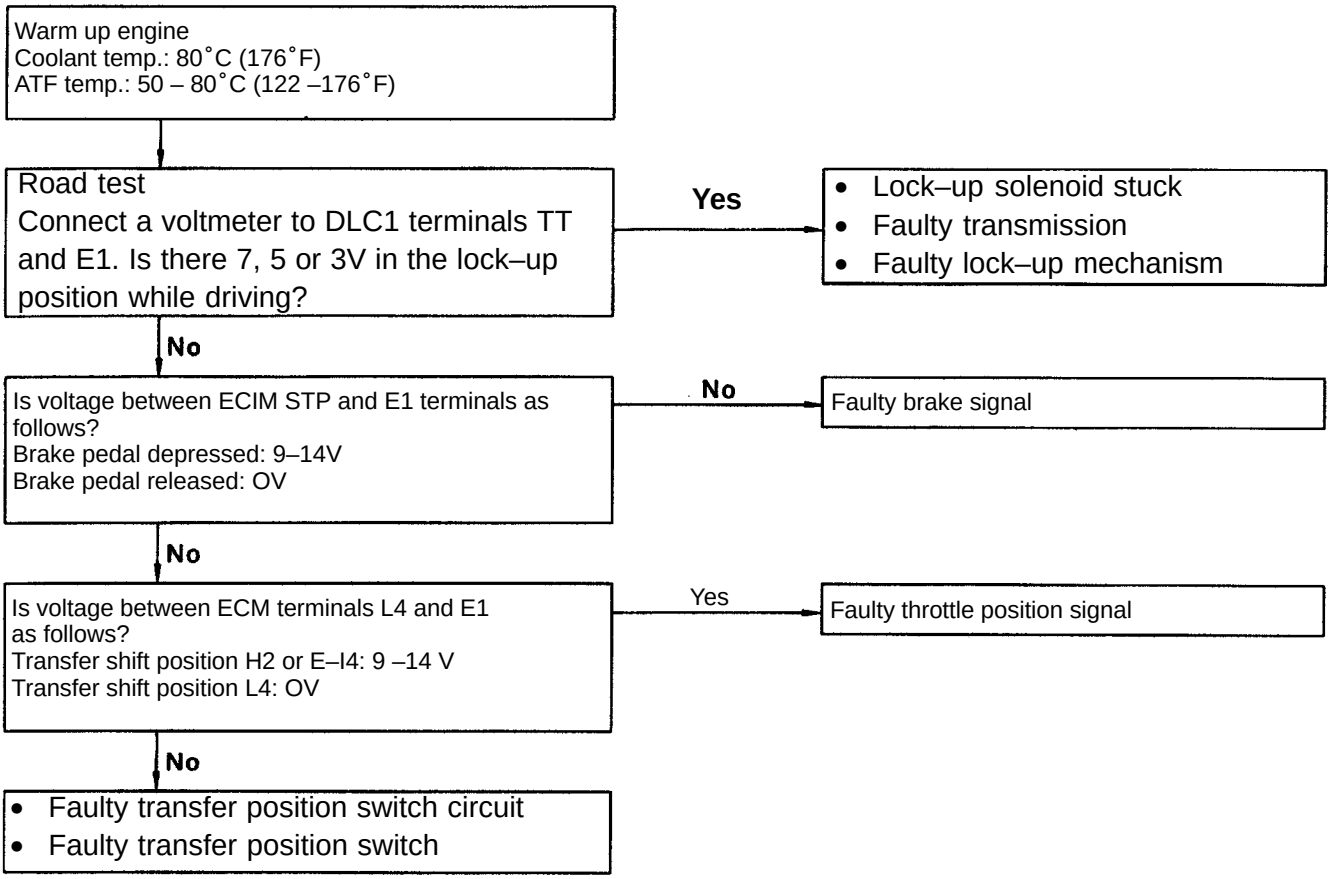

Trouble No.5 Transfer gear no change L4 from H4

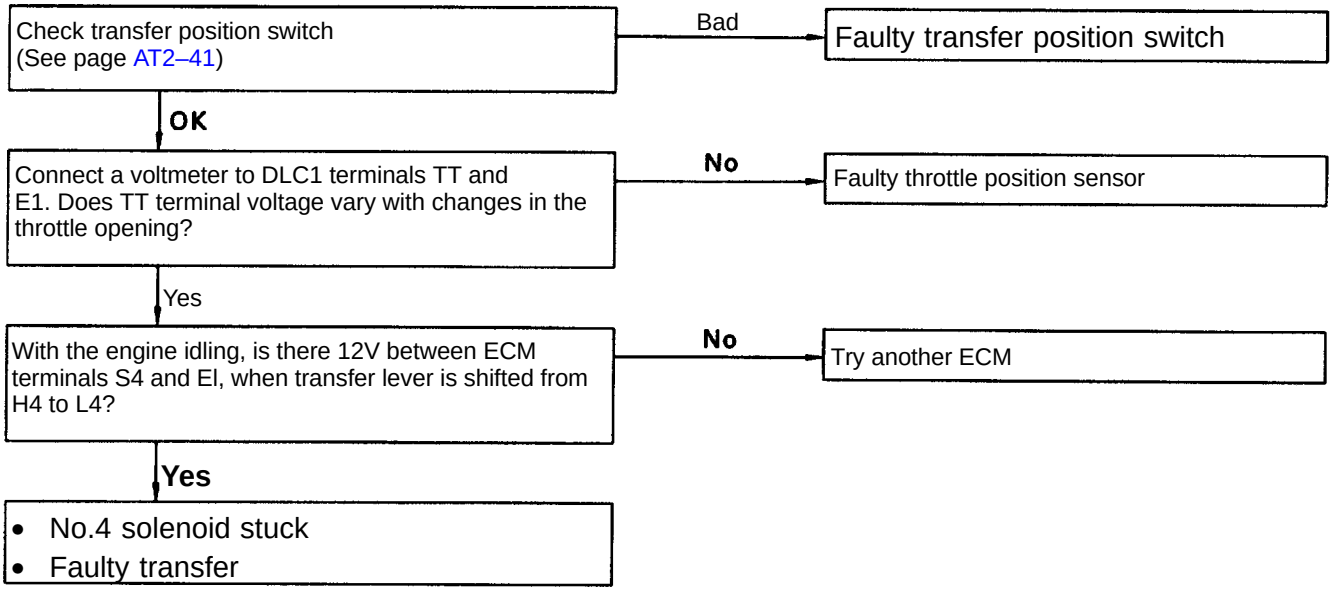

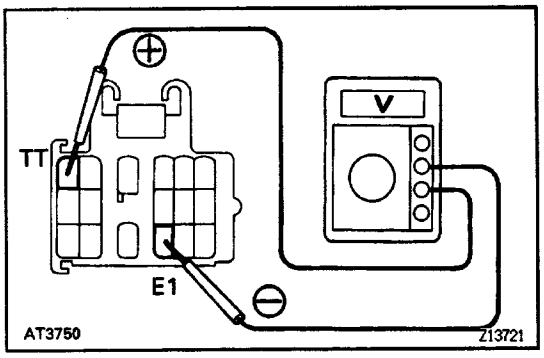

TT TERMINAL VOLTAGE INSPECTION

1. INSPECT THROTTLE POSITION SENSOR SIGNAL

(a) Turn the ignition switch to ON. Do not start the engine.

(b) Connect a voltmeter to DLC1 terminals TT and E1.

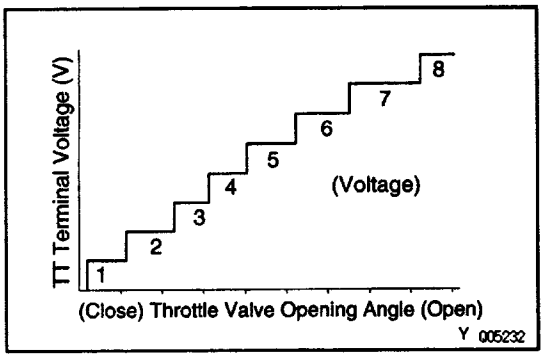

(c) While slowly depressing the accelerator pedal, check that TT terminal voltage rises in sequence. If the voltage does not change in proportion to the throttle opening angle, there is a malfunction in the throttle position sensor or circuit.

2. INSPECT BRAKE SIGNAL

(a) Depress the accelerator pedal until the TT terminal indicates 8 V.

(b) Depress the brake pedal and check the voltage reading from the TT terminal.
Brake pedal depressed ..... 0 V
Brake pedal released ..... 8 V

If not as indicated, there is a malfunction in either the stop light switch or circuit.

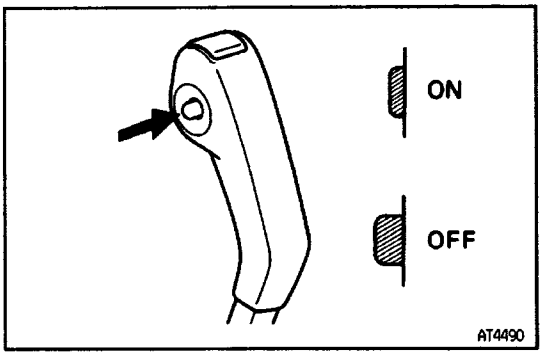

3. INSPECT EACH UP–SHIFT POSITION

(a) Warm up the engine.
Engine coolant temperature:
80° (176°F)

(b) Turn the O/D main switch to 'ON".

(c) Place the pattern select switch in "Normal" and the shift lever into the D position.

(d) During a road test (above 10 km/h,6 mph) check that voltage at the TT terminal is as indicated below for each up–shift position.

If the voltage rises from 0 V to 7 V in the sequence shown, the control system is okay.

The chart on the left shows the voltmeter reading and corresponding gears.

TT Terminal (V)	Gear Position
0	1st
2	2nd
3	2nd Lock-up
4	3rd
5	3rd Lock-up
6	O/D
7	O/D Lock-up

V06039

HINT: Determine the gear position by a light shock or change in RPM when shifting. The lock –up clutch will turn ON only infrequently during normal 2nd and 3rd gear operation. To trigger this action, press the accel–erator pedal to 50 96 or more of its stroke. At less than 50 96, the voltage may change in the sequence 2 V – 4V–6V–7V.

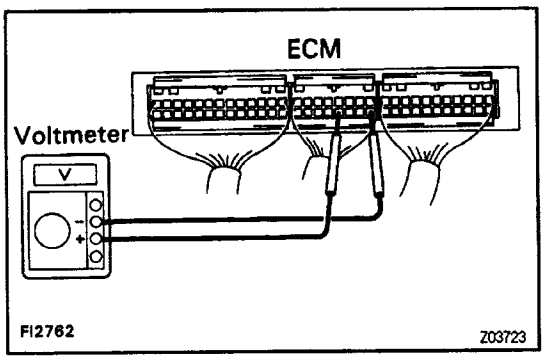

ELECTRONIC CONTROL COMPONENTS INSPECTION

1. INSPECT VOLTAGE OF ECM CONNECTOR

(a) Remove the cowl side trim of passenger side.
(b) Turn the ignition switch ON.
(c) Measure the voltage at each terminal.

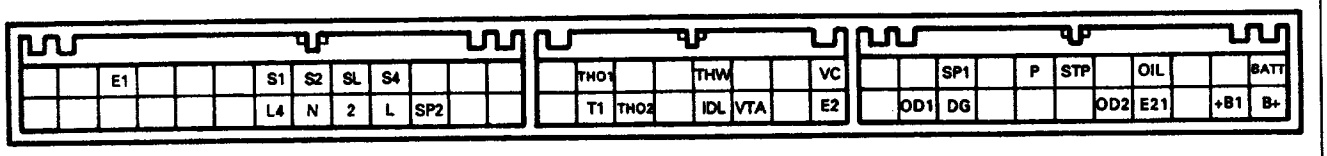

F12796

Terminal	Measuring condition		Voltage (V)
S1 – E1	—		9 – 14
S2, SL – E1			0
S4 – E1	(ransfer shift position H2 or H4		0
	ransfer shift position L4		9 – 14
P – E1	PWR pattern		9 – 14
	NORM pattern		0 – 2
STP – E1	Brake pedal is depressed		9 – 14
	Brake pedal is released		0
THW – E2 (E21)	Engine coolant temp. 80˚C (176˚F)		0.1 – 1.0
IDL – E2 (E21)	Throttle valve fully closed		0
	Throttle valve open		9 – 14
VTA – E2 (E21)	Throttle valve fully closed		0.1 – 1.0
	Throttle valve fully open		3 – 5
VC (VCC) – E2 (E21)			4 – 6
OD1 – E1	—		5
OD2 – E1	O/D main switch turned ON		9 – 14
	O/D main switch turned OFF		0
SP1 – E1	Cruise control main switch OFF	Standing still	0 or 5
		Vehicle moving	2 – 3
SP2 – E1	Standing still		0 or 5
	Vehicle moving		2 – 3

Terminal	Measuring condition	voltage (V)
N – E1	N position	9 – 14
	Except N position	0 – 2
2 – E1	2 position	9 – 14
	Except 2 position	0 – 2
L – E1	L position	9 – 14
	Except L position	0 – 2
L4 – E1	Transfer shift position H2 or H4	9 – 14
	Transfer shift position Ld	0
OIL – E1		9 – 14
THO1, THO2 – E2 THO (E21)	Fluid temp. 20˚C (68˚F)	4 – 5
B + (+B1) – E1		9 – 14
BATT – E1		9 – 14

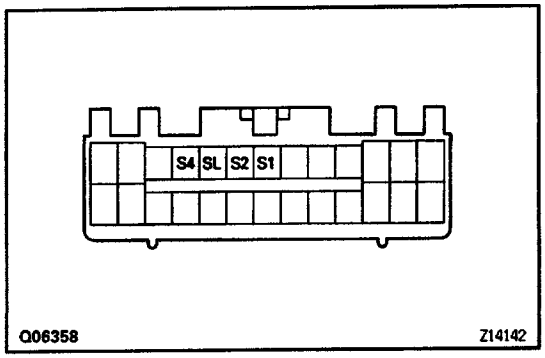

2. INSPECT SOLENOID

(a) Disconnect the connector from the ECM.

(b) Measure the resistance between S1, S2, SL, S4 and ground.

Resistance:

11 –15 Ω

(c) Apply battery positive voltage to each terminal. Check that an operation noise can be heard from the solenoid.

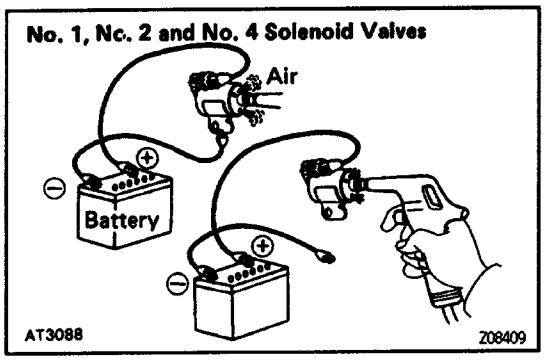

3. CHECK SOLENOID SEALS

If there is foreign material in the solenoid valve, there will be no fluid control even with solenoid operation.

(a) Check the solenoid valves.

- Applying 490 kPa (5 kgf/cm2, 71 psi) of compressed air, check that the solenoid valves do not leak.
- When supply battery positive voltage to the solenoids, check that the solenoid valves open.

(b) Check the lock–up solenoid valve.

- Applying 490 kPa (5 kgf/cm2, 71 psi) of compressed air, check that the solenoid valve opens.
- When supply battery positive voltage to the solenoid, check that the solenoid valve does not leak the air.

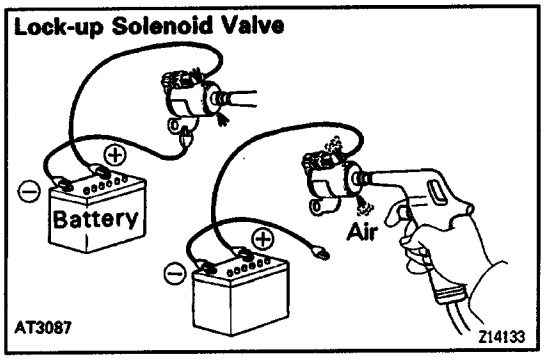

If a malfunction is found during voltage inspection (step 1.), inspect the components listed below.

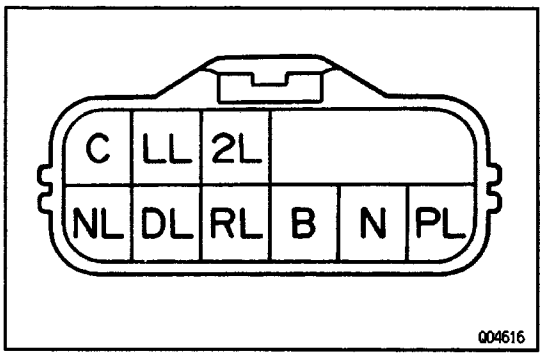

4. INSPECT PARK/NEUTRAL POSITION SWITCH

Inspect that there is continuity between terminals.

Shift position	Tester condition to terminal	Specified value
P	B – N PL – C	Continuity
R	RL – C	Continuity
N	B – N NL – C	Continuity
D	DL – C	Continuity
2	2L – C	Continuity
L	LL – C	Continuity

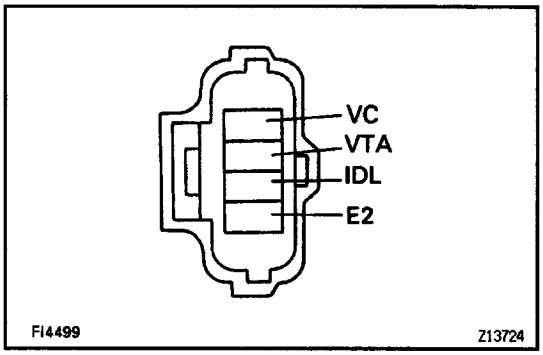

5. INSPECT THROTTLE POSITION SENSOR

Using an ohmmeter, check the resistance between each terminal.

Tester condition to terminal	Throttle valve condition	Resistance (kΩ)
IDL – E2	Fully closed	Less than 2.3
IDL – E2	Open	Infinity
VC – E2	–	3.9 – 9.0
VTA – E2	Fully closed	0.47 – 6.1
VTA – E2	Fully opened	3.1 – 12.1

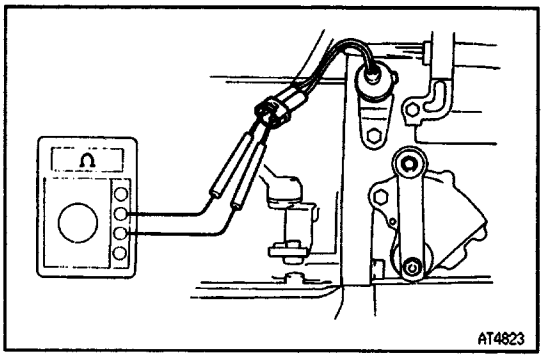

6. INSPECT N0.2 VEHICLE SPEED SENSOR

(a) Jack up the rear wheel on one side.
(b) Connect an ohmmeter between the terminals.
(c) Spin the wheel and check that the meter needle deflects from 0 Ω to ooΩ.

7. INSPECT NO.1 VEHICLE SPEED SENSOR

(See page BE–48)

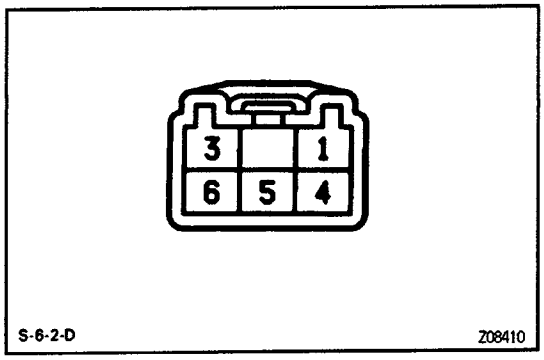

8. INSPECT PATTERN SELECT SWITCH

Using an ohmmeter, check the continuity of the terminals for each switch position.

HINT: As there are diodes inside, be careful of the tester probe polarity.

Switch position	Tester condition to terminal number	Specified value
PWR	4 – 6	Continuity
NORM	–	No continuity

9. INSPECT ENGINE COOLANT TEMPERATURE SENSOR

(See page EG2–246)

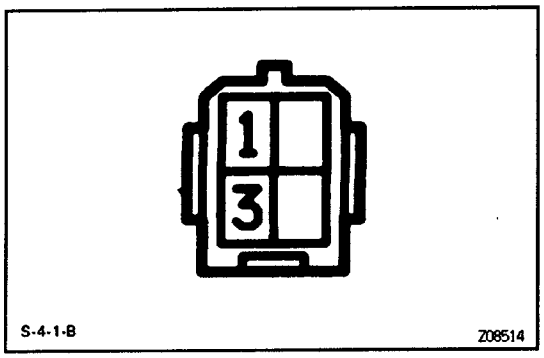

10. INSPECT O/D MAIN SWITCH

Using an ohmmeter, check the continuity of the terminals for each switch position.

Switch position	Tester condition to terminal number	Specified value
ON	–	No continuity
OFF	1 – 3	Continuity

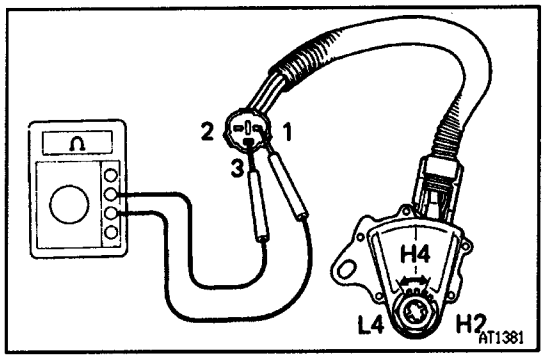

11. INSPECT TRANSFER POSITION SWITCH

Check that there is continuity between each terminal.

Shift position	Tester condition to terminal number	Specified value
H4	1 – 3	Continuity
L4	1 – 2 – 3	Continuity
H2	–	No continuity

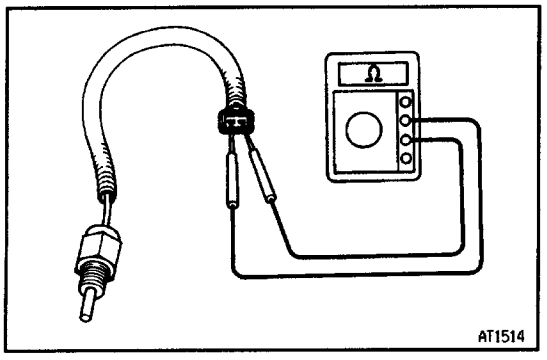

12. INSPECT TRANSMISSION AND TRANSFER FLUID TEMPERATURE SENSOR

Measure the resistance between terminals.

Oil Temperature	Resistance (Ω)
20°C (68°F)	5 k – 20 k
120°C (248°F)	540 – 690
150°C (302°F)	300 – 340

STALL TEST

The objective of this test is to check the overall performance of the transmission and engine by measuring the stall speeds in the D and R positions.

NOTICE:

- **Do the test at normal operating fluid temperature 50–80˚C (122–176˚F).**
- **Do not continuously run this test longer than 5 seconds.**
- **To ensure safety, conduct this test in a wide, clear, level area, which provides good traction.**
- **The stall test should always be carried out in pairs. One should observe the conditions of wheels or wheel stoppers outside the vehicle while the other is doing the test.**

MEASURE STALL SPEED

(a) Chock the front and rear wheels.
(b) Connect a tachometer to the engine.
(c) Fully apply the parking brake.
(d) Keep your left foot pressed firmly on the brake pedal.
(e) Shift the transfer lever to the H2 position.
(f) Start the engine.
(g) Shift into the D position. Step all the way down on the accelerator pedal with your right foot. Quickly read the stall speed at this time.

NOTICE: Release the accelerator pedal and atop test If the rear wheels begin to rotate before the engine speed reaches specified stall speed.

Stall speed:

2,850 ± 150 rpm

(h) Do the same test in R position.

EVALUATION

(a) If the stall speed is the same for both positions but lower than specified value:
Engine output may be insufficient
Stator one–way clutch is not operating properly

HINT: If more than 600 rpm below the specified value, the torque converter clutch could be faulty.

(b) If the stall speed in D position is higher than specified:

- Line pressure too low
- Forward clutch slipping
- No.2 one–way clutch not operating properly
- O/D one–way clutch not operating properly
- Transfer direct clutch slipping

(c) If the stall speed in R position is higher than specified:

- Line pressure too low
- Direct clutch slipping
- First and reverse brake slipping
- O/D one–way clutch not operating properly
- Transfer direct clutch slipping

(d) If the stall speed in both R and D positions are higher than specified:

- Line pressure too low
- Improper fluid level
- O/D one–way clutch not operating properly
- Transfer direct clutch slipping

STALL TEST

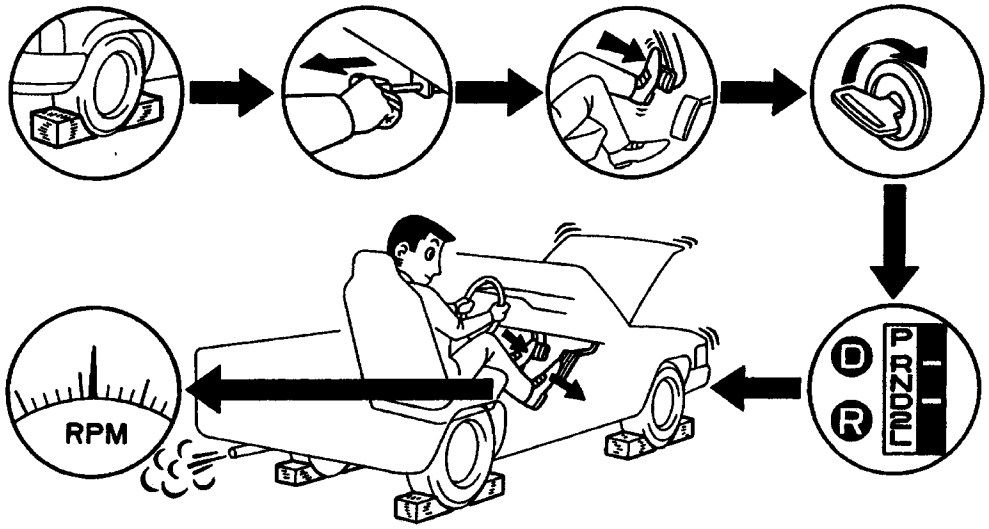

003789

TIME LAG TEST

When the shift lever is shifted while the engine is idling, there will be a certain time lapse or lag before the shock can be felt. This is used for checking the condition of the 0/D direct clutch, forward clutch, direct clutch and first and reverse brake.

NOTICE:

- **Do the test at normal operating fluid temperature 50–80˚C (122–176˚F).**
- **Be sure to allow one minute interval between tests.**
- **Make 3 measurements and take the average value.**

MEASURE TIME LAG

(a) Fully apply the parking brake.

(b) Shift the transfer shift lever to the H2 position.

(c) Start the engine and check the idle speed.

Idle speed (N position and air conditioner OFF):

800 ± 50 rpm

(c) Shift the shift lever from N to D position. Using a stop watch, measure the time it takes from shifting the lever until the shock is felt.

Time lag:

Less than 1.2 seconds

(d) In same manner, measure the time lag for N–R.

Time lag:

Less than 1.5 seconds

EVALUATION

(a) If N→D time lag is longer than specified:

- Line pressure too low
- Forward clutch worn
- O/D one–way clutch not operating properly

(b) If N→R time lag is longer than specified:

- Line pressure too low
- Direct clutch worn
- First and reverse brake worn
- O/D one–way clutch not operating properly

TIME LAG TEST

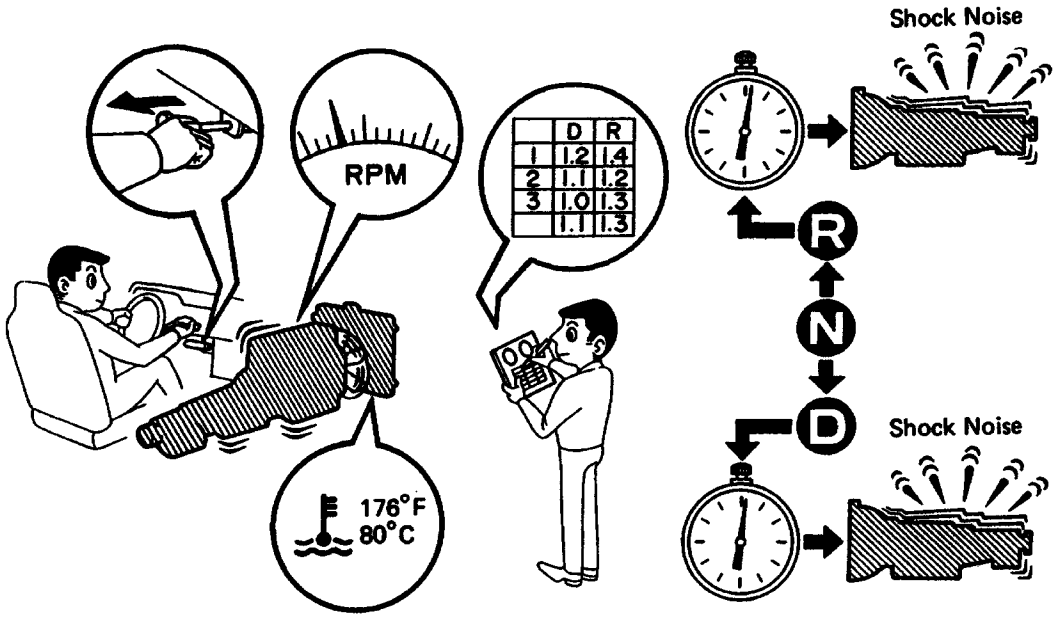

HYDRAULIC TEST

PREPARATION

(a) Warm up the transmission fluid.

(b) Remove the transmission case test plug and connect the hydraulic pressure gauge.

SST 09992 – 00094

NOTICE:

- **Do the test at normal operating fluid temperature 50–80˚C (122–176˚F).**
- **The line pressure test should always be carried out in pairs. One should observe the conditions of wheels or wheel stoppers outside the vehicle while the other is doing the test.**

MEASURE LINE PRESSURE

(a) Fully apply the parking brake and chock the 4 wheels.

(b) Start the engine and check idling speed.

(c) Keep your left foot pressed firmly on the brake pedal and shift into D position.

(d) Measure the line pressure when the engine is idling.

(e) Press the accelerator pedal all the way down. Quickly read the highest line pressure when engine speed reaches stall speed.

NOTICE: Release the accelerator pedal and stop test if the rear wheels begin to rotate before the engine speed reaches specified stall speed.

(f) In the same manner, do the test in R position.

Line pressure **kPa (kgf/cm², psi)**	D position	R position
Idling	**427–481 (4.3–4.9, 61–70)**	**510–608 (5.2–6.2, 74–88)**
Stall	**1,118–1,363 (11.4–13.9, 162–198)**	**1,373–1,716 (14.0–17.5, 199–249)**

If the measured pressures are not up to specified values, recheck the throttle cable adjustment and do a retest.

EVALUATION

(a) If the measured values at all positions are higher than specified:

- Throttle cable out of adjustment
- Throttle valve defective
- Regulator valve defective

(b) If the measured values at all positions are lower than specified:

- Throttle cable out of adjustment
- Throttle valve defective
- Regulator valve defective
- Oil pump defective
- O/D direct clutch defective
- Transfer direct clutch defective (H2, H4)
- Transfer front drive clutch defective (1–14, L4)
- Transfer low speed brake defective (1–4)

(c) If pressure is low in the D position only:

- D position circuit fluid leakage
- Forward clutch defective

(d) If pressure is low in the R position only:

- R position circuit fluid leakage
- Direct clutch defective
- First and reverse brake defective

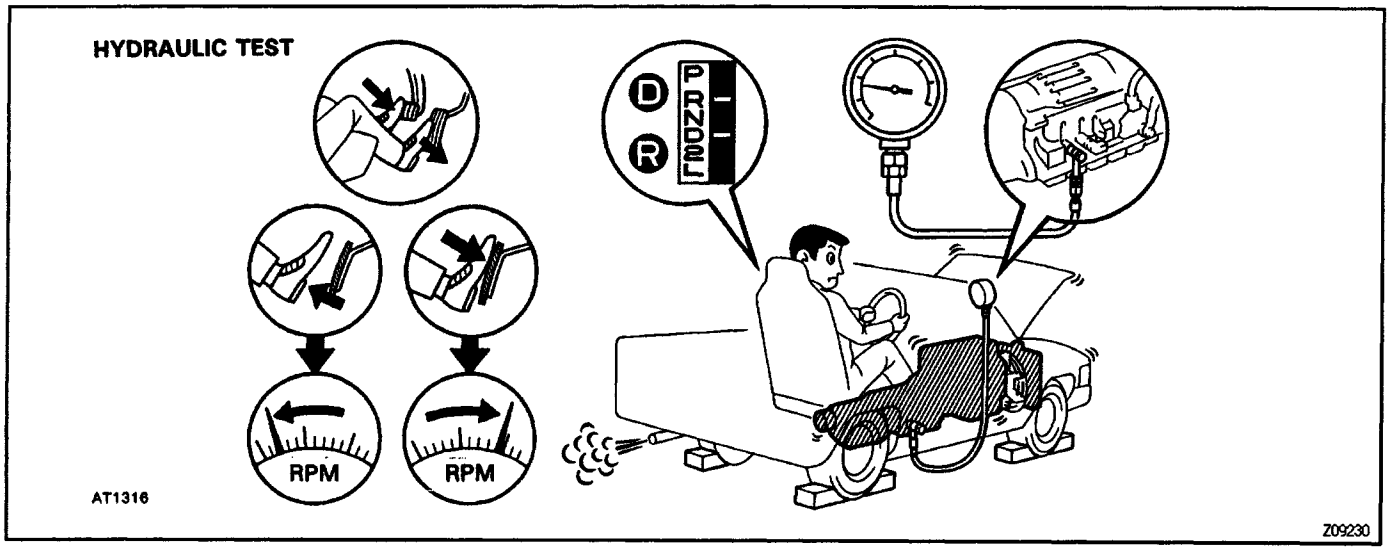

ROAD TEST

NOTICE: Do this test at normal operating fluid temperature 50 – 80˚C (122 –178˚F).

HINT: The transmission shift points for the H2, H4 and L4 transfer positions are different. Also the O/D gear and lock–up are canceled when L4 is engaged.

1. D POSITION TEST IN NORM AND PWR PATTERN POSITION

Shift into the D position and hold the accelerator pedal constant at the full throttle valve opening position.

Check the following:

(a) 1 –2, 2–3 and 3–O/D up–shifts should take place, and shift points should conform to those shown in the automatic shift schedule.

Conduct a test under both Normal and Power pattern.

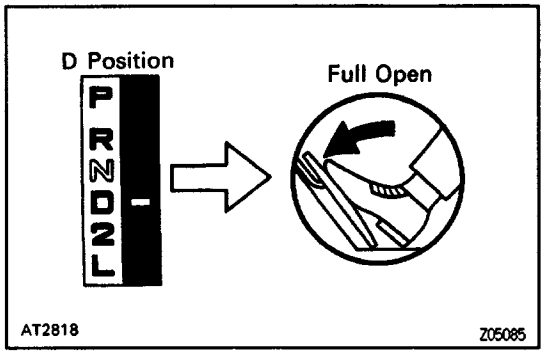

HINT: There is no O/D up – shift or lock – up when the coolant temperature is below 70˚C (158˚F).

EVALUATION

(1) If there is no 1–i2 up–shift:
- No.2 solenoid is stuck.
- 1– 2 shift valve is stuck.

(2) If there is no 2–3 up–shift:
- No.1 solenoid is stuck.
- 2–3 shift valve is stuck.

(3) If there is no 3–)0/D up–shift:
- 3–4 shift valve is stuck.

(4) If the shift point is defective:
- Throttle valve, 1– 2 shift valve, 2–3 shift valve,
- 3–4 shift valve etc., are defective.

(5) If the lock–up is defective:
- Lock–up solenoid is stuck.
- Lock–up relay valve is stuck.

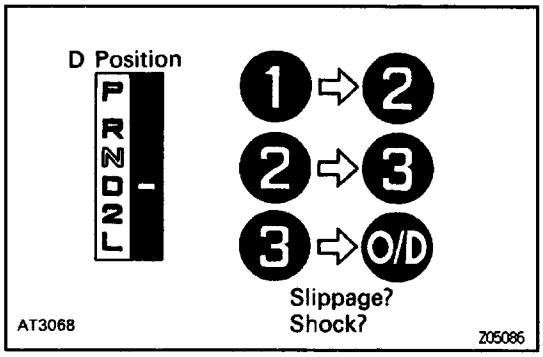

(b) In the same manner, check the shock and slip at the 1→2 , 2→3, and 3→O/D up–shifts.

EVALUATION

If the shock is excessive:
- Line pressure is too high.
- Accumulator is defective.
- Check ball is defective.

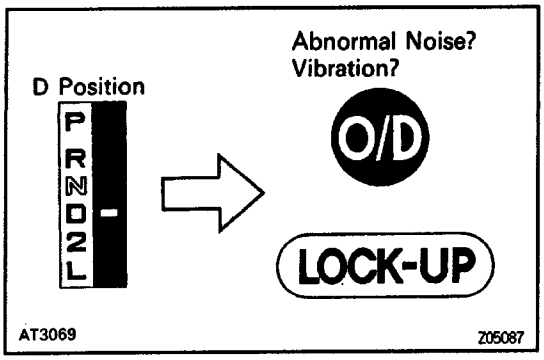

(c) Run at the D position lock–up or 0/D gear and check for abnormal noise and vibration.

HINT: The check for the cause of abnormal noise and vibration must be made with extreme care as it could also be due to loss of balance in the propeller shaft, differential, torque converter clutch, etc.

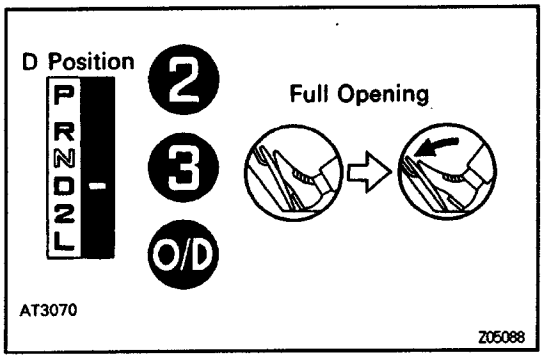

(d) While running in the D position, 2nd, 3rd and 0/D gears, check to see that the possible kick–down vehicle speed limits for 2→1, 3→2 and O/D→3 kick-downs conform to those indicated on the automatic shift schedule.

(e) Check for abnormal shock and slip at kick–down.

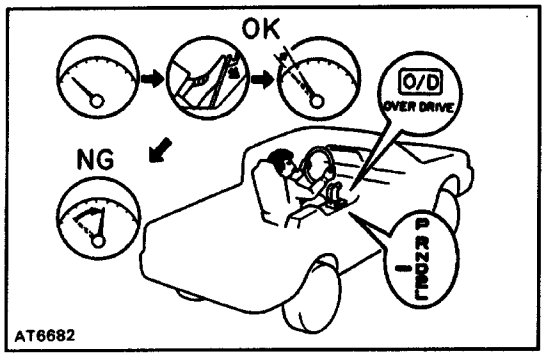

(f) Check for the lock –up mechanism.
(1) Drive in D position, O/D gear, at a steady speed (lock–up ON) of about 75 km/h (47 mph).
(2) Lightly depress the accelerator pedal and check that the engine RPM does not change abruptly.
If there is a big jump in engine RPM, there is no lock–up.

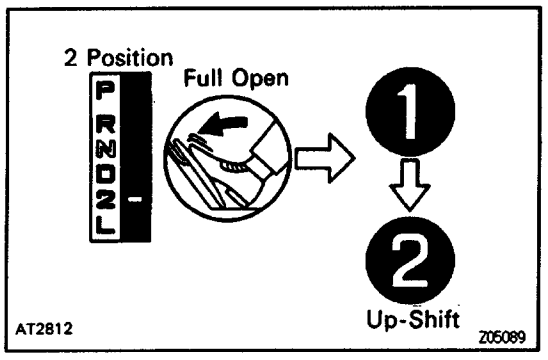

2. 2 POSITION TEST

Shift into the 2 position and, while driving with the accelerator pedal held constantly at the full throttle valve opening position, push in one of the pattern selectors and check on the following points.

(a) Check to see that the 1→2 up–shift takes place and that the shift point conforms to that shown on the automatic shift schedule.

HINT:

- There is no O/D up–shift and lock–up in the 2 position.
- To prevent overrun, the transmission up–shifts into 3rd gear at around 100 km/h (62 mph) or more.

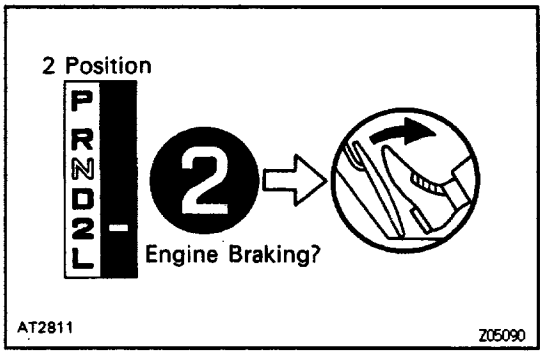

(b) While running in the 2 position and 2nd gear, release the accelerator pedal and check the engine braking effect.

EVALUATION

If there is no engine braking effect:

- Second coast brake is defective.

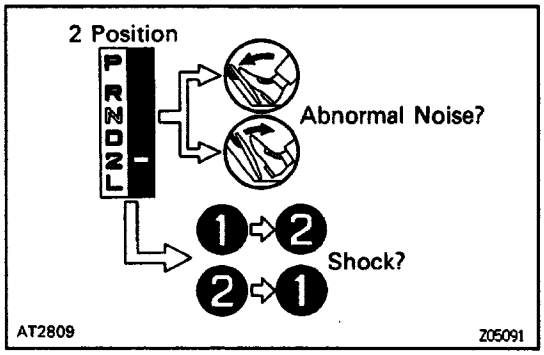

(c) Check for abnormal noise during acceleration and deceleration, and for shock at up–shift and down-shift.

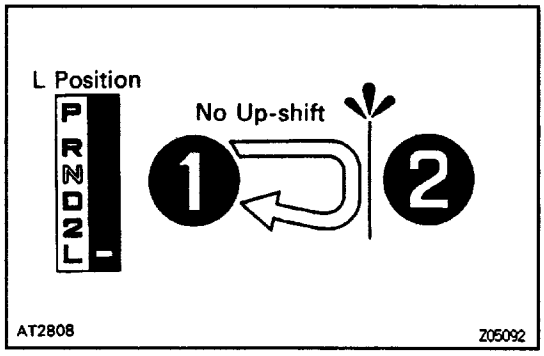

3. L POSITION TEST

(a) While running in the L position, check to see that there is no up–shift to 2nd gear.

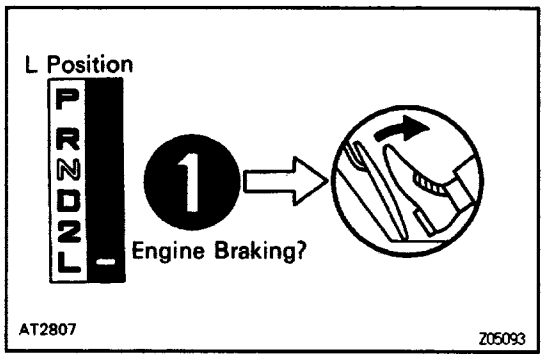

(b) While running in the L position, release the accelerator pedal and check the engine braking effect.

EVALUATION

If there is no engine braking affect:

- First and reverse brake is defective.

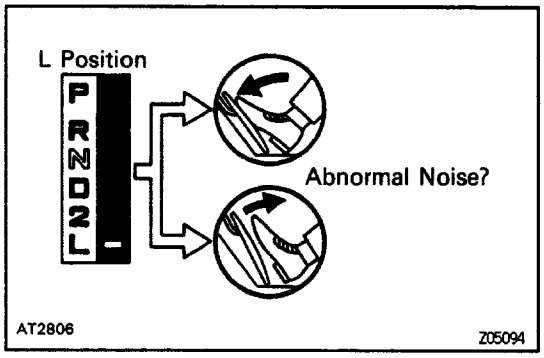

(c) Check for abnormal noise during acceleration and deceleration.

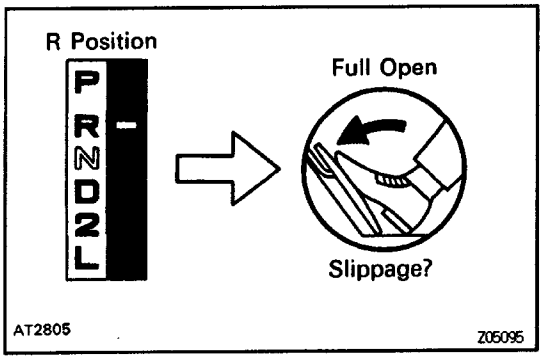

4. R POSITION TEST

Shift into the R position and, while starting at full throttle, check for slipping.

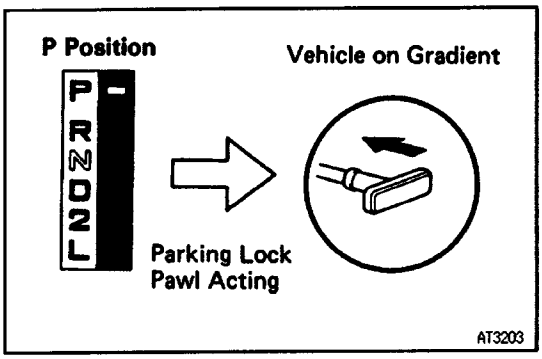

5. P POSITION TEST

Stop the vehicle on a gradient (more than 5°) and after shifting into the P position, release the parking brake. Then check to see that the parking lock pawl holds the vehicle in place.

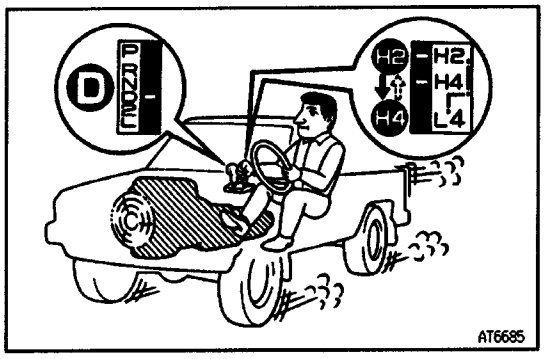

6. TRANSFER TEST

(a) When the shift lever is shifted from the H2 to H4, confirm that the vehicle changes from 2 to 4 wheel drive. If it does not, the transfer is faulty.

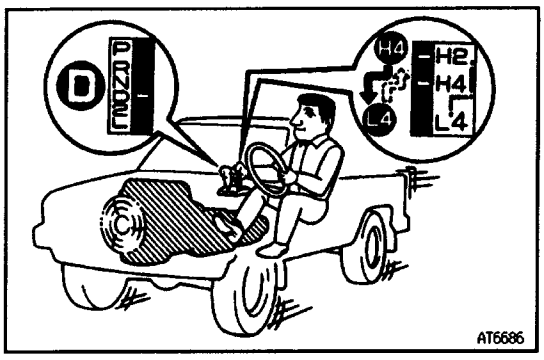

(b) When the transfer lever is shifted from H4 to L4, confirm that the gear changes according to the shift diagram (See page AT2–54). If it does not, the No.4 solenoid, ECM or transfer is faulty.

AUTOMATIC SHIFT SCHEDULE

SHIFT POINT (Transfer shift position ”H2” or ’H4”)

Shift position	Shifting point		Vehicle speed km/h (mph)
D (NORM)	Throttle valve fully opened	1→2	50–53 (31–33)
		2→3	90–96 (56–60)
		3→O/D	131–138 (81–86)
		O/D→3	125–132 (78–82)
		3→2	84–91 (52–57)
		2→1	40–44 (25–27)
	Throttle valve fully closed	3→O/D	35–39 (22–24)
		O/D→3	21–25 (13–16)
D (PWR)	Throttle valve fully opened	1→2	50–53 (31–33)
		2→3	90–96 (56–60)
		3→O/D	131–138 (81–86)
		O/D→3	125–132 (78–82)
		3→2	84–91 (52–57)
		2→1	40–44 (25–27)
	Throttle valve fully closed	3→O/D	38–42 (24–26)
		O/D→3	21–25 (13–16)
2 (NORM and PWR)	Throttle valve fully opened	1→2	43–46 (27–29)
		2→3	103–109 (64–68)
		3→2	97–103 (60–64)
		2→1	38–42 (24–26)
L (NORM and PWR)	Throttle valve fully opened	3→2	82–89 (51–55)
		2→1	47–51 (29–32)

LOCK– UP (Transfer shift position ”H2” or ’H4’)

D position Throttle valve opening 596	Lock–up ON km/h (mph)	Lock–up OFF km/h (mph)
’3rd Gear	52–56 (32–35)	50–53 (31–33)
O/D Gear (NORM)	64–68 (40–42)	55–59 (34–37)
O/D Gear (PWR)	64–68 (40–42)	58–62 (36–39)

*: O/D main switch OFF

HINT:

(1) Lock –up will occur in 2nd gear unless the throttle valve opening is greater than 50%.

(2) There is no lock–up in the 2 and L positions.

(3) In the following cases, the lock–up will be released regardless of the lock–up pattern.

- When the throttle is completely closed.
  When the stop light switch is ON.

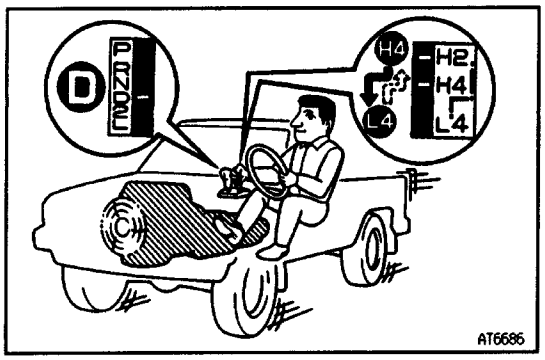

TRANSFER HIGH–LOW SHIFT POSITION

The A340H transfer differs from previous manual transfer in that high–low shifting is possible while the vehicle is in motion, though it is not possible at all vehicle speeds or throttle opening angles. The shifting possibility positions for high–low shifting have been adopted with the idea of improving shifting performance and transfer conditions, and preventing engine overrun.

The shifting possibility positions are controlled by the ECM and when a high–low shift change is made within these positions, the ECM operates the No.4 solenoid which carries out the high – low transfer shift. However, if a transfer is attempted outside the shifting possibility position, the high–low shift will not take place until the vehicle speed and throttle opening angle come within the appropriate position.

The high–low shifting possibility positions are shown in the diagrams below.

There are 3 shifting possibility positions for when the transmission gear is in 1 st, 2nd or 3rd gear, which combine with the respective transmission shift positions (L. 2, D).

Although the high → low shift takes place in the 1 st gear, 2nd gear and 3rd gear shifting positions with the gears in 1 st gear, 2nd gear and 3rd gear respectively, when a high → low shift change is made in 1 st gear while in the 2nd gear shifting possibility position only after the transmission has shifted up into 2nd gear does the high → low shift take place.

In the 2 position and D position high → low shifting possibility positions where the 1 st and 2nd positions overlap, the high → low shift will take place in 1 st gear if the transmission is in 1 st gear, or in 2nd gear if the transmission is in 2nd gear.

L Position: High – Low Shift Possibility Range

* : This transfer shift is only possible when the IDL contact points of the throttle position sensor are ON.

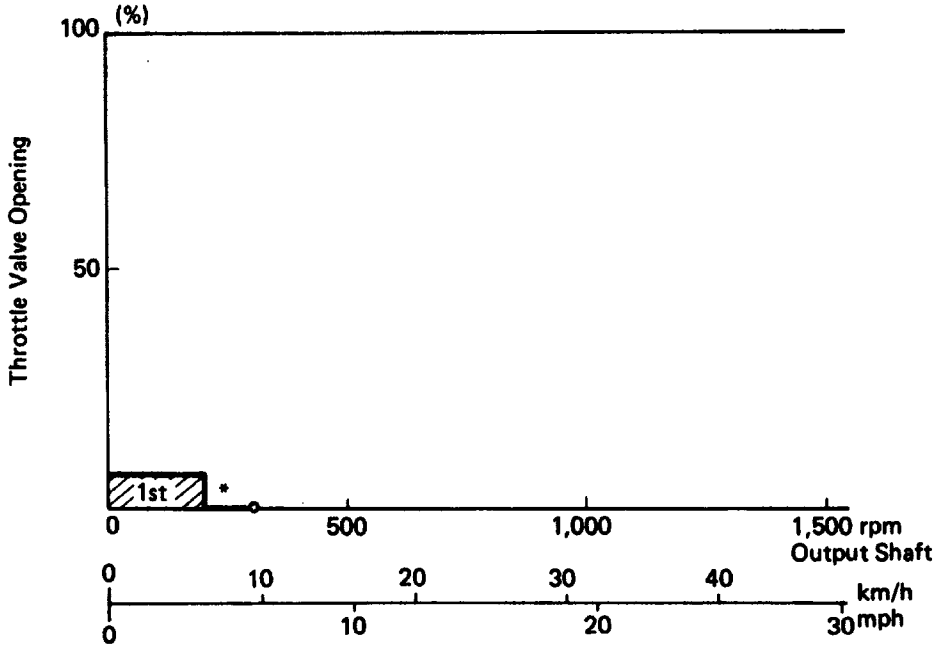

AT4662

Z08412

2 Position : High → Low Shift Possibility Range

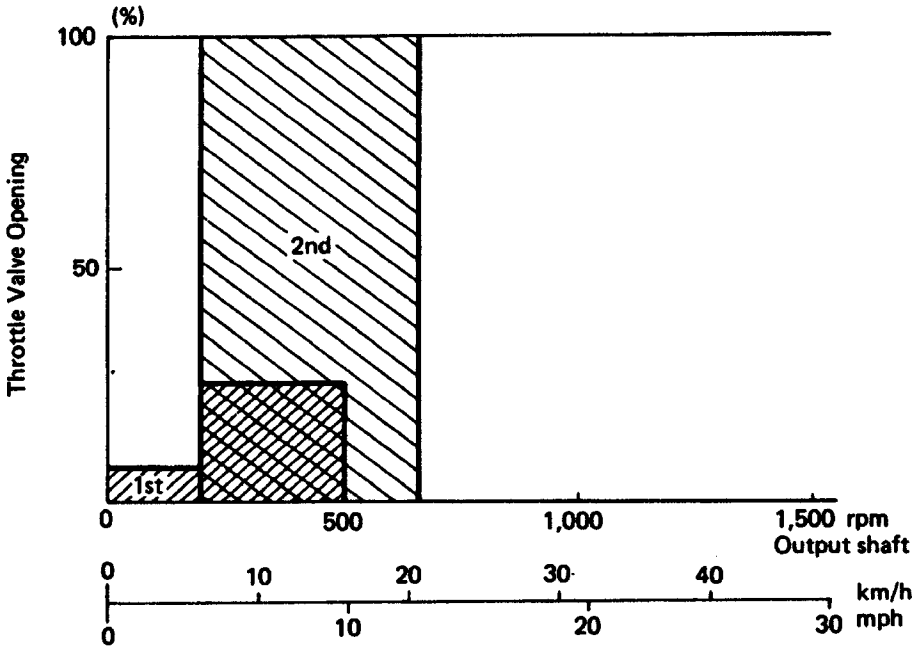

AT4663

D Position : High → Low Shift Possibility Range

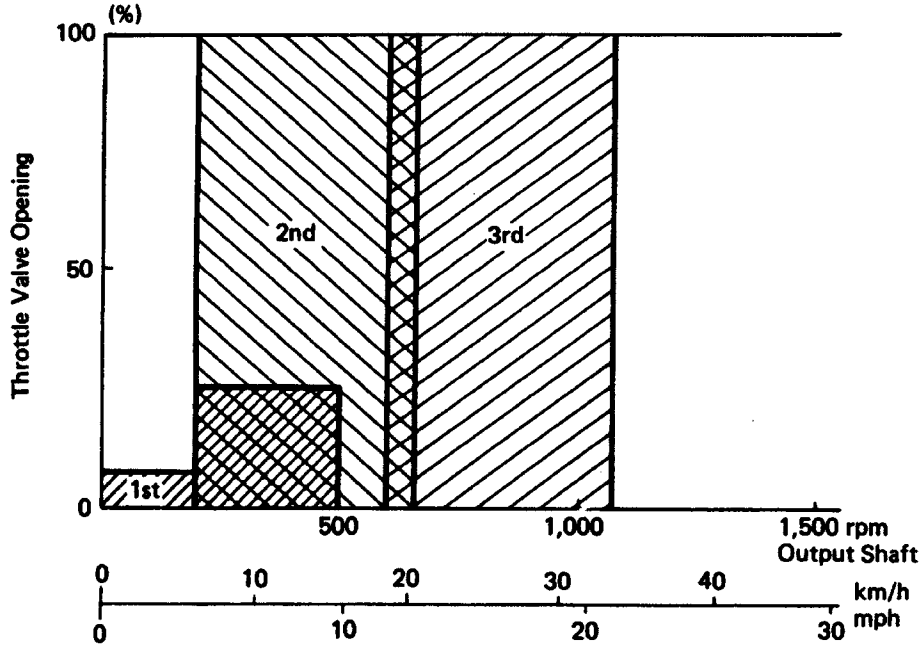

AT4664

Z08413

Low → High Shift Possibility Range (L, 2, D Position)

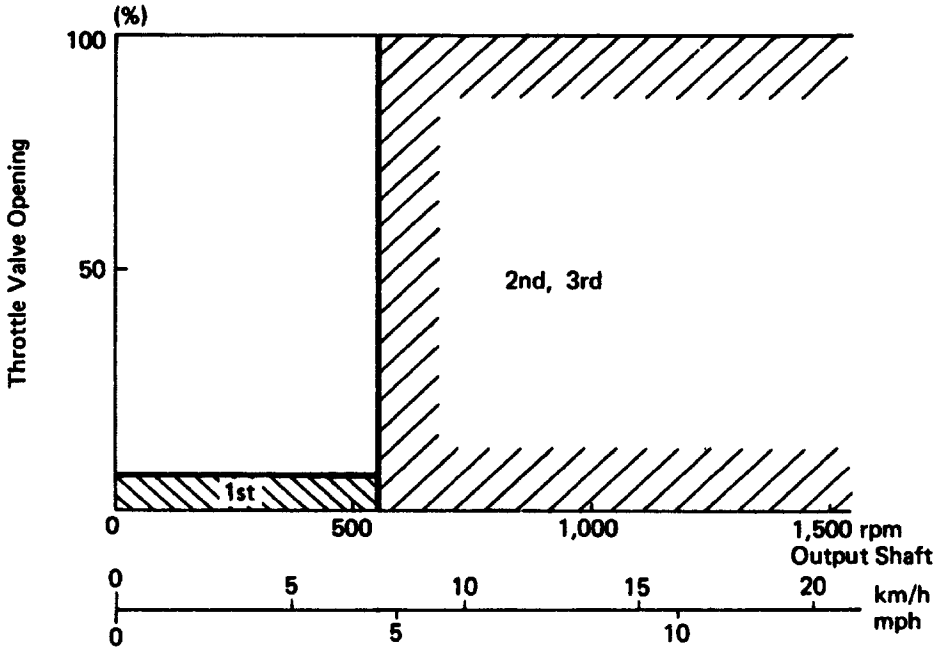

AT4665

Z08414

VALVE BODY

VALVE BODY AND/OR SOLENOID VALVE

1. CLEAN TRANSMISSION EXTERIOR

To prevent contamination, clean the exterior of the transmission.

2. DRAIN TRANSMISSION FLUID

Remove the drain plug and drain the fluid into a suitable container.

3. REMOVE FRONT STABILIZER BAR

(See page SA–122)

4. REMOVE FRONT PROPELLER SHAFT

(See page PR–7)

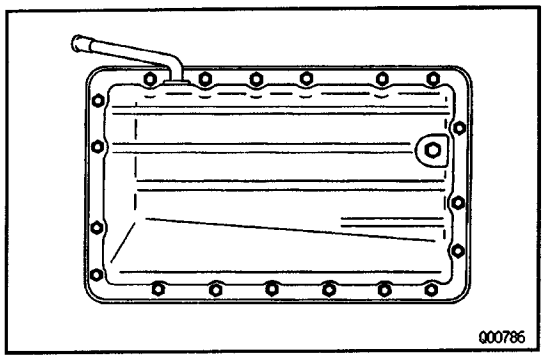

5. REMOVE TRANSMISSION OIL PAN

(a) Remove the 19 bolts.

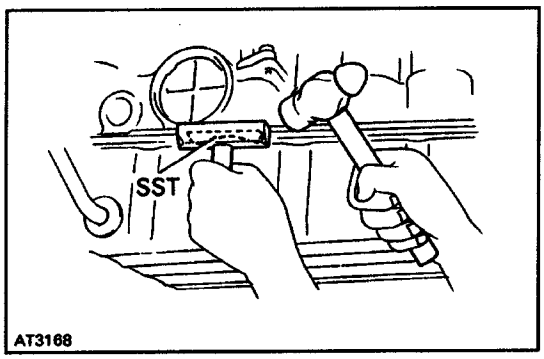

(b) Install the blade of SST between the transmission case and oil pan, cut oft applied sealer.

SST 09032 – 00100

NOTICE: Be careful not to damage the oil pan flange.

(c) Remove the pan by lifting the transmission case.

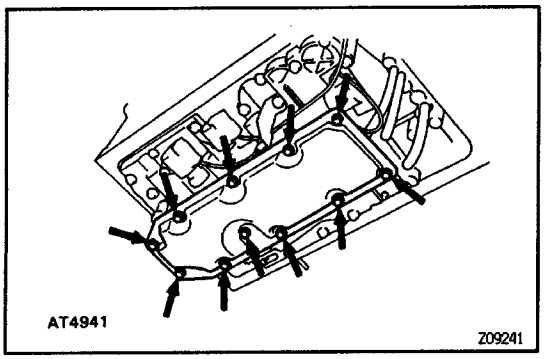

6. REMOVE OIL STRAINER AND GASKETS

(a) Remove the 11 bolts holding the oil strainer to the oil strainer case.

(b) Remove the oil strainer and gasket.

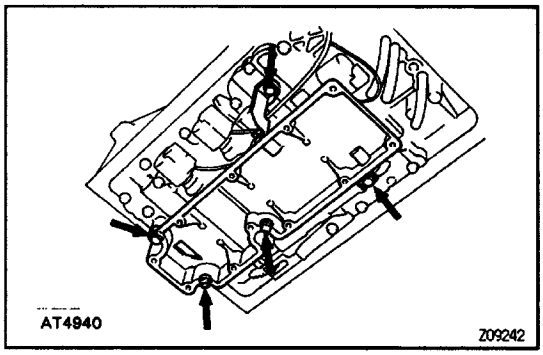

(c) Remove the 5 bolts and oil strainer case.
(d) Remove the 2 gaskets from the case.

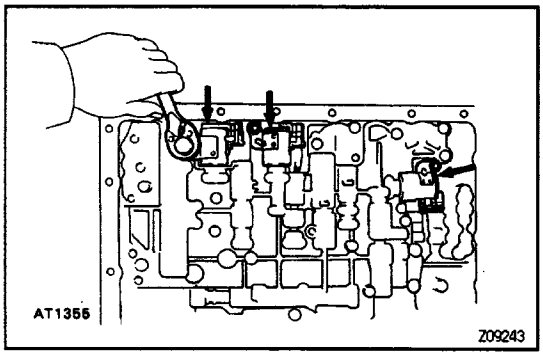

7. WHEN REPLACING SOLENOID

(a) Disconnect the connectors from the solenoids.
(b) Remove the solenoid mounting bolts.
(c) Remove the solenoids.

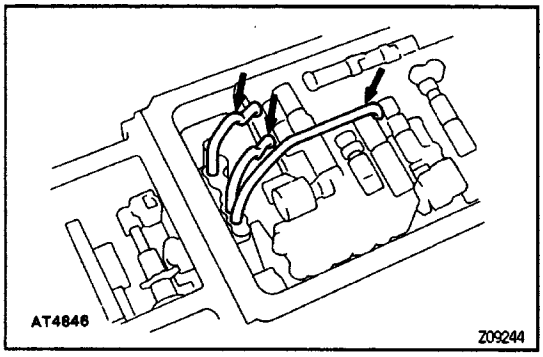

8. REMOVE OIL PIPES

Pry up both pipe ends with a large screwdriver and remove the 3 pipes.

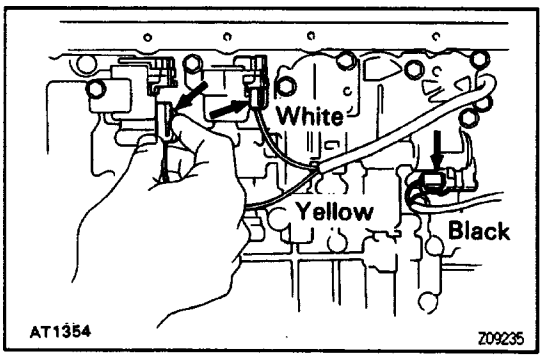

9. DISCONNECT SOLENOID CONNECTORS

Disconnect the 3 connectors from No.1, No.2 and lock – up solenoids.

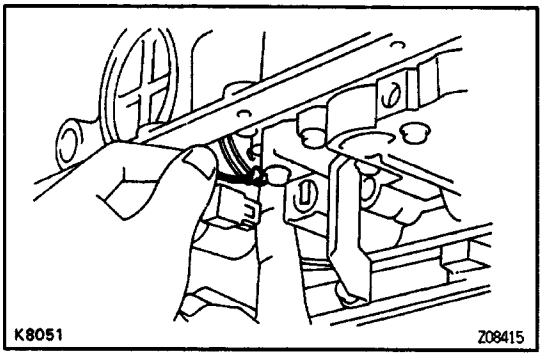

10. REMOVE VALVE BODY

(a) Disconnect the throttle cable from the cam.

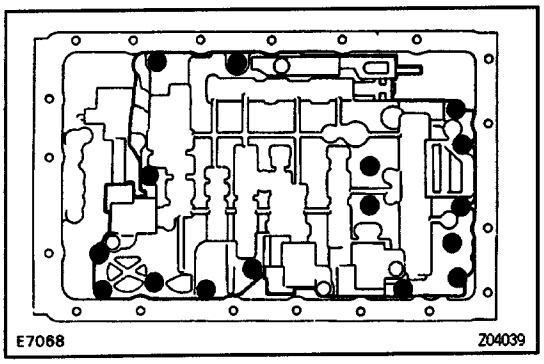

(b) Remove the 16 bolts.

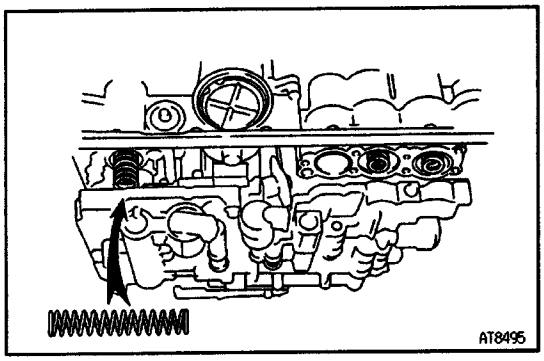

(c) Remove the 2 Co accumulator piston springs.
(d) Remove the valve body.

HINT: Be careful not to drop the check ball body and spring.

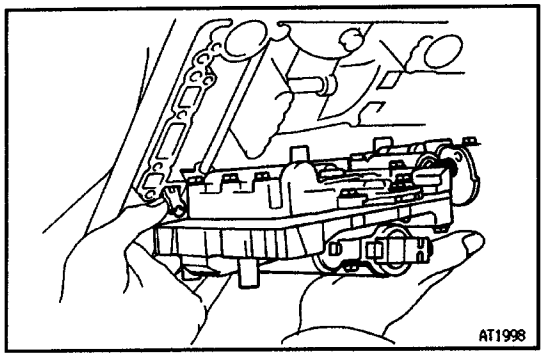

VALVE BODY AND/OR SOLENOID VALVE INSTALLATION

1. INSTALL VALVE BODY

(a) Install the valve body together the check ball body and spring.

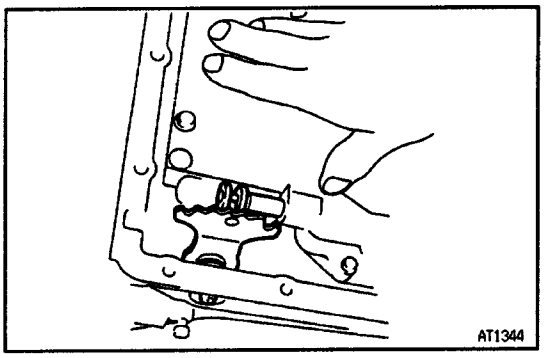

(b) Align the groove of the manual valve to the pin of the lever.

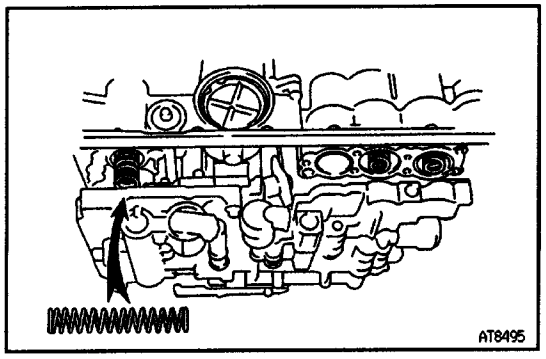

(c) Install the 2 Co accumulator piston springs.

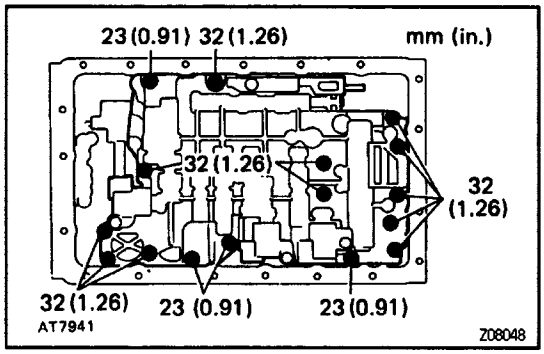

(d) Install the 16 bolts.
Torque: 10 N–m (100 kgf–cm, 7 ft–lbf)

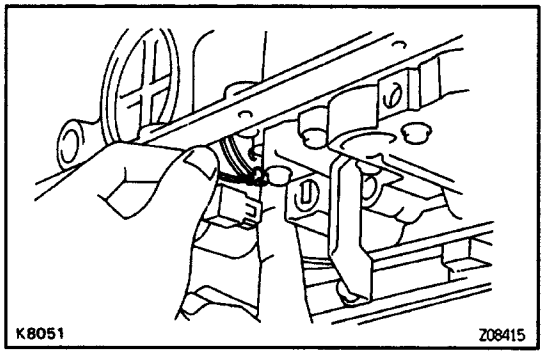

(e) Connect the throttle cable to the cam.

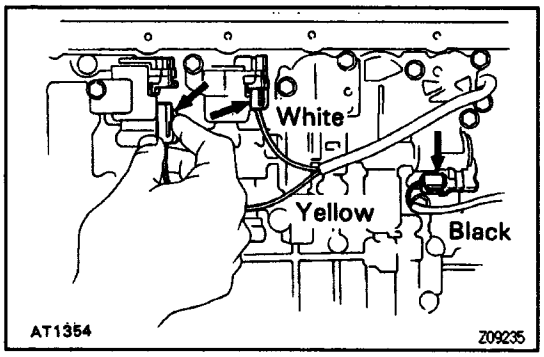

2. CONNECT CONNECTORS TO EACH SOLENOID

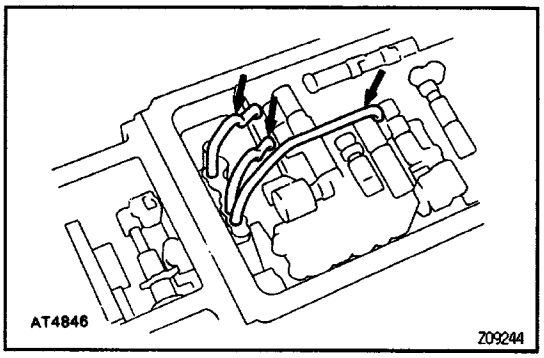

3. INSTALL OIL PIPES
Using a plastic hammer, install the 3 pipes into position, as shown.
NOTICE: Be careful not to bend or damaged the pipes.

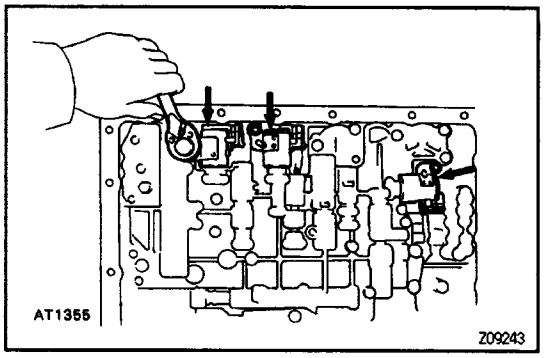

4. WHEN REPLACING SOLENOID
(a) Install a new O–ring to the solenoid.
(b) Install the solenoid and torque the bolt.
Torque: 10 N–m (100 kgf–cm, 7 ft–lbf)
(c) Connect the connector to the solenoid.
(d) Clamp the solenoid wire.

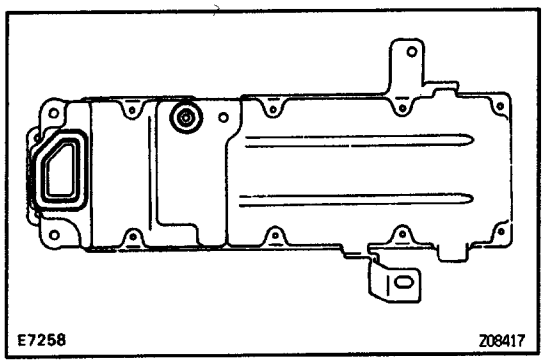

5. INSTALL OIL STRAINER AND GASKETS

(a) Install 2 new gaskets to the oil strainer case.

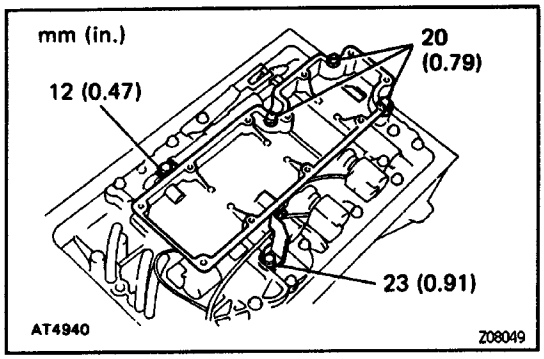

(b) Install the oil strainer case and torque the 5 bolts.
Torque: 10 N–m (100 kgf–cm. 7 ft–lbf)

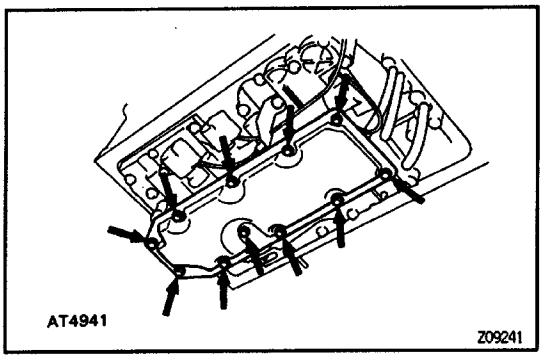

(c) Install a new gasket to the oil strainer case.
(d) Install the oil strainer and torque the 11 bolts.
Torque: 6.9 N–m (70 kgf–cm, 61 in.–lbf)

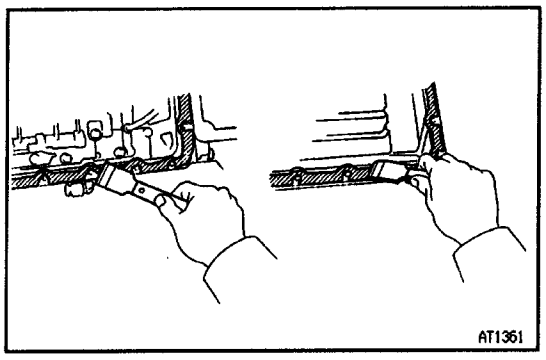

6. INSTALL OIL PAN

(a) Remove any packing material and be careful not to drop the oil on the contacting surfaces of the oil pan and transmission.
(b) Clean contacting surfaces of any residual packing material using gasoline or alcohol.

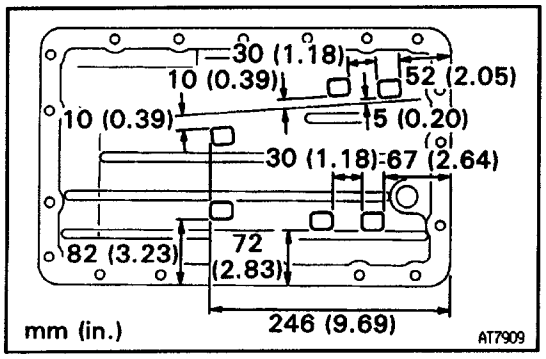

(c) Install the 6 magnets, as shown.

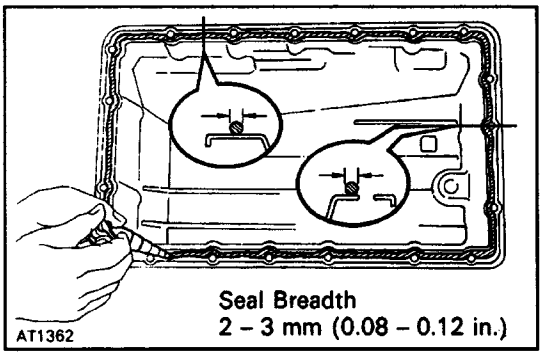

(d) Apply FIPG to the oil pan, as shown in the illustration.

FIPG:

Part No. 08826–00090, THREE BOND 1281 or equivalent

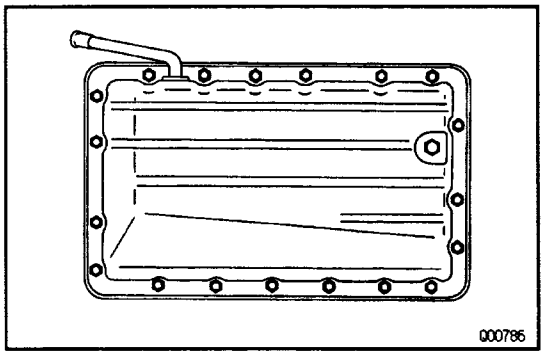

(e) Install and torque the 19 bolts.

Torque: 7.4 N–m (75 kgf–cm, 61 in.–lbf)

7. INSTALL OIL PAN DRAIN PLUG

Torque the drain plug.

Torque: 20 N–m (205 kgf–cm, 15 ft–lbf)

8. INSTALL FRONT PROPELLER SHAFT
(See page PR–16)

9. INSTALL FRONT STABILIZER BAR
(See page SA–123)

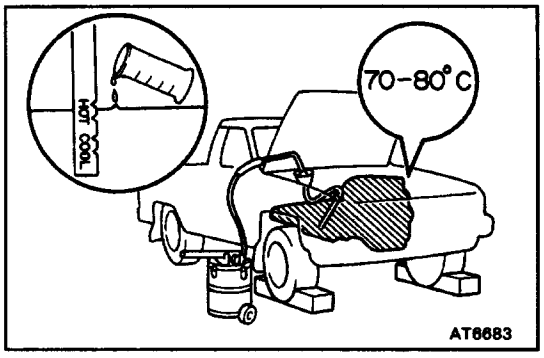

10. FILL TRANSMISSION WITH ATF
(See page AT2–24)

NOTICE: Do not overfill

Fluid type:

ATF DEXRON II

11. CHECK FLUID LEVEL

AUDIO SYSTEM

PARTS LOCATION

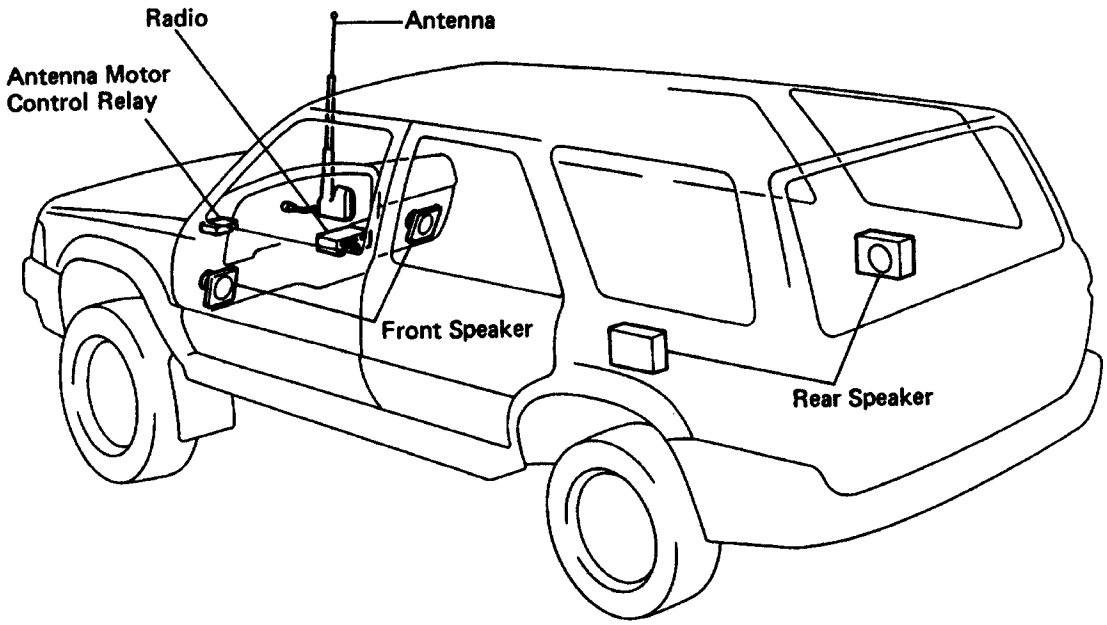

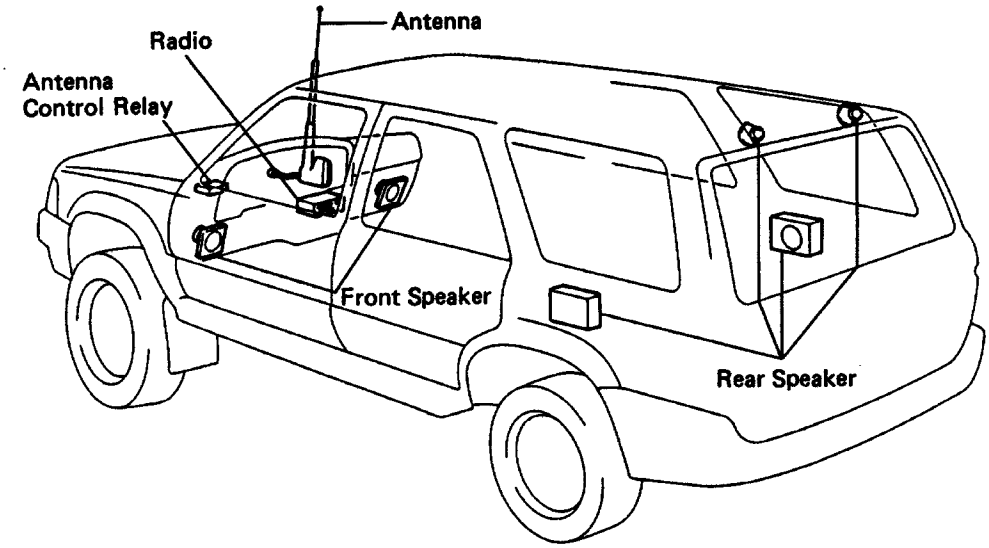

BE5856
N03183

Z08687

SYSTEM DESCRIPTION

1. RADIO WAVE BAND

RADIO WAVE BAND

The radio wave bands used in radio broadcasting are as follows:

Frequency	30kHz	300kHz	3M Hz	30M Hz	300M Hz
Designation		LF	MF	HF	VHF
Radio wave		LW	AM (MW)	SW	FM (UKW)
Modulation method		Amplitude modulation			Frequency modulation

LF: Low Frequency MR Medium Frequency HF: High Frequency VHF: Very High Frequency
HINT: In this section, the term ”AM” includes LW, MW and SW, and the term ”FM” includes UKW.

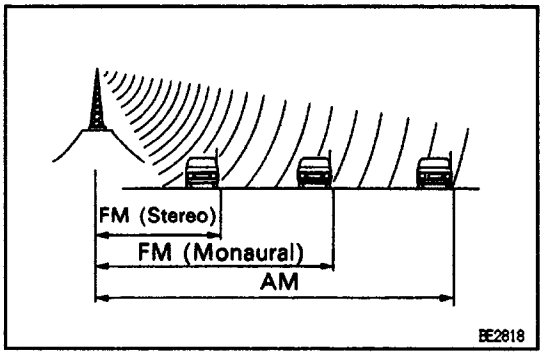

2. SERVICE AREA

There is great difference in the size of the service area for AM, FM monaural, and FM stereo broadcasting. Thus it may happen that FM broadcast cannot be received even though AM comes in very clearly.
Not only does FM stereo have the smallest service area, but it also picks up static and other types of interference (”noise”) the most easily.

3. RECEPTION PROBLEMS

Besides the problem of static, there are also the problems called ”fading”, ”multipath” and ”fade out”. These problems are caused not by electrical noise but by the nature of the radio waves themselves.

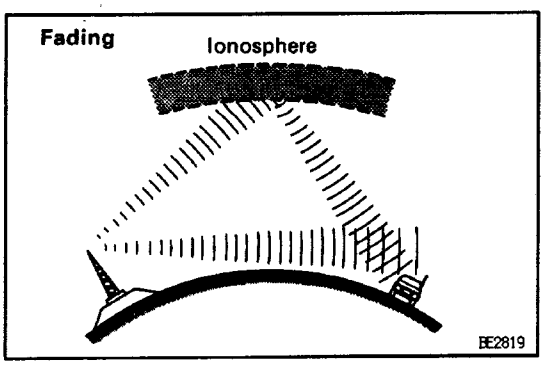

Fading

Besides electrical interference, AM broadcasts are also susceptible to other types of interference, especially at night. This is because AM radio waves bounce off the ionosphere at night. These radio waves then interfere with the signals from the same transmitter that reach the vehicle's antenna directly. This type of interference is called "fading".

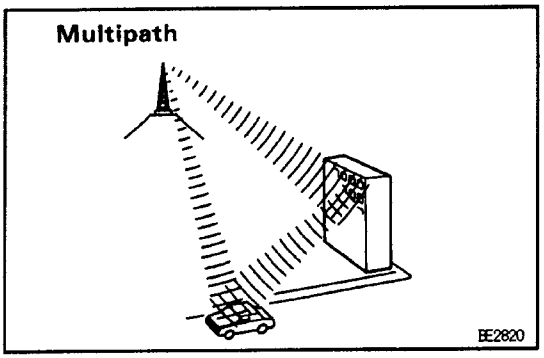

Multipath

One type of interference caused by the bouncing of radio waves off of obstructions is called "rnultipath". Multipath occurs when a signal from the broadcast transmitter antenna bounces off buildings and mountains and interferes with the signal that is received directly.

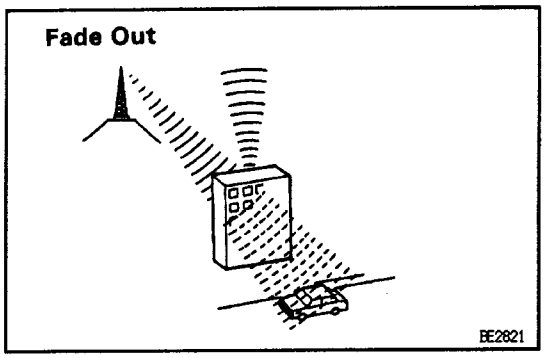

Fade out

Because FM radio waves are of higher frequencies than AM radio waves, they bounce off buildings, mountains, and other obstructions. For this reason, FM signals often seem to gradually disappear or fade away as the vehicle goes behind a building or other obstruction. This is called "fade out".

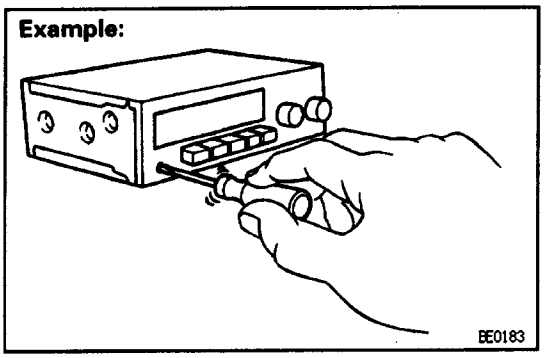

4. ADJUST ANTENNA TRIMMER

Except Electronic Tuning Radio

(a) Fully lengthen antenna.

(b) With volume and tone at maximum, turn the dial to around 1,400 kHz where there is no reception.

(c) Adjust the trimmer to where static is loudest.

HINT: The position of the antenna trimmer may vary according to the type of radio, but is always on the front side.

5. COMPACT DISC PLAYER

Compact Disc (here after called ”CD”) Players use a laser beam pick–up to read the digital signals recorded on the CD and reproduce analog signals of the music, etc. There are 4.7 in. (12 cm) and 3.2 in. (8 cm) CDs available.
HINT: Never attempt to disassemble or oil any part of the player unit. Do not insert any object other than a CD into the slot.

NOTICE: CD players use an Invisible laser beam which could cause hazardous radiation exposure if directed. Be sure to operate the player correctly as instructed.

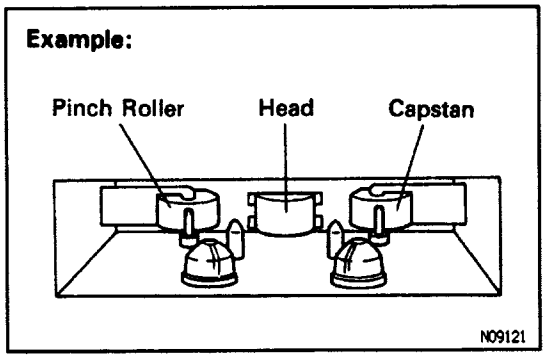

MAINTENANCE

Tape Player/Head Cleaning

(a) Raise the cassette door with your finger.
Next using a pencil or similar object, push in the guide.
(b) Using a cleaning pen or cotton applicator soaked in cleaner, clean the head surface, pinch rollers and capstans.

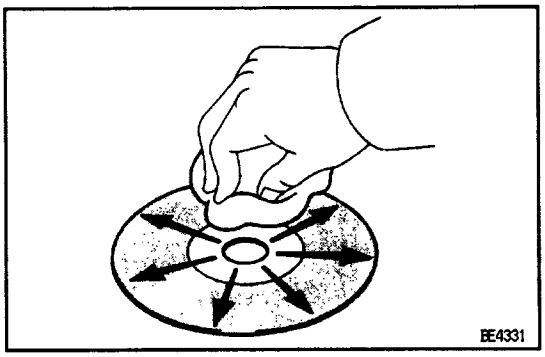

CD Player/CD Cleaning

If the CD gets dirty, clean the CD by wiping the surfaces from the center to outside in the radial directions with a soft cloth.

NOTICE: Do not use a conventional record cleaner or anti–static record preservative.

HOW TO USE DIAGNOSTIC CHART

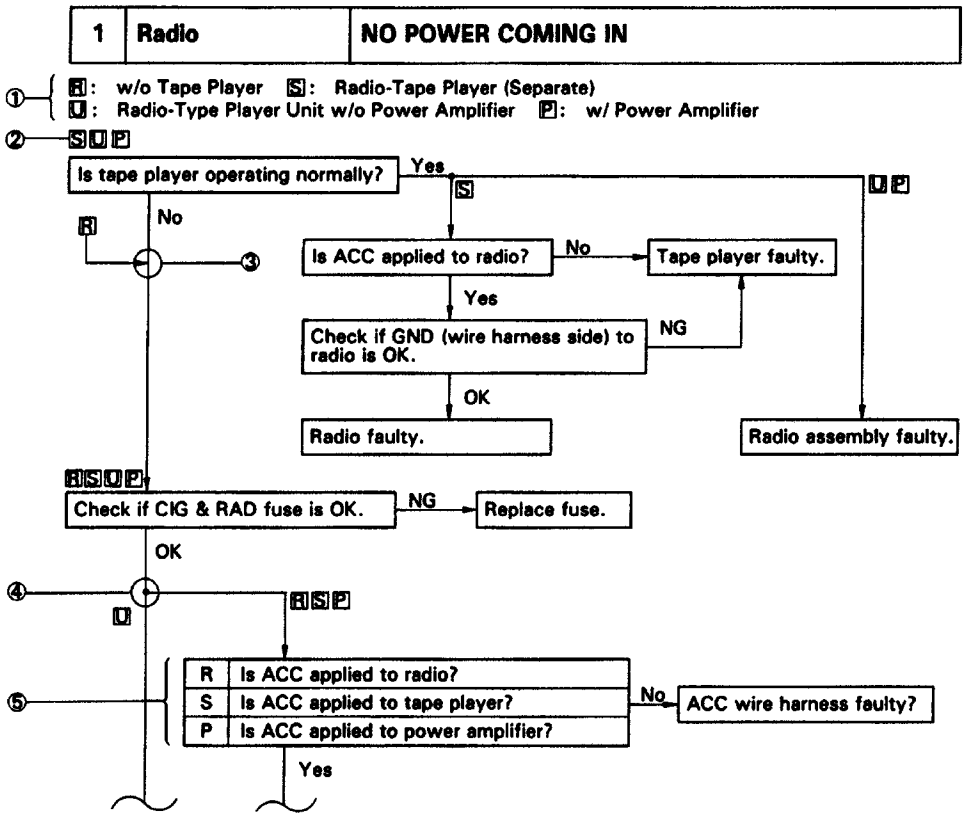

① Audio system type and symbol used.
HINT: Confirm the applicable type of audio system.

② Symbol for type of audio system the question applies to.
HINT: If the audio system type is not applicable, proceed to next question below.

③ Junction without black circle.
HINT: Proceed to next question below.

④ Junction with black circle.
HINT: Proceed to question for applicable audio system type.

⑤ HINT: Select question for applicable audio system type.

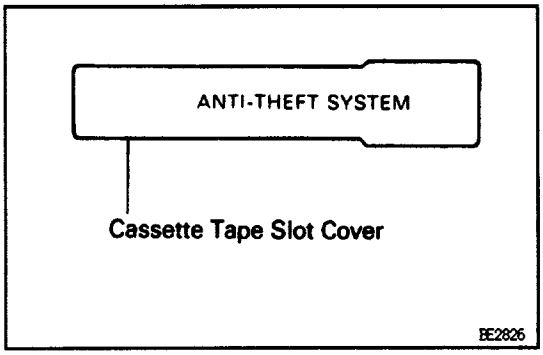

ANTI–THEFT SYSTEM

The anti–theft system is only provided for audio system equipped with an Acoustic Flavor function.

HINT: The words ”ANTI–THEFT SYSTEM” are displayed on the cassette tape slot cover.

For operation instructions for the anti–theft system, please consult the audio system section in the Owner’s Manual.

1. SETTING SYSTEM

The system is in operation once the customer has pushed the required buttons and entered the customer–selected 3–digit ID number.(Refer to the Owner’s Manual, ”SETTING THE ANTI–THEFT SYSTEM”).

HINT:

- When the audio system is shipped the ID number has not been input, so the anti–theft system is not in operation.
- If the ID number has not been input, the audio system remains the same as a normal audio system.

2. ANTI–THEFT SYSTEM OPERATION

If the normal electrical power source (connector or battery terminal) is cut off, the audio system becomes inoperable, even if the power supply resumes.

3. CANCELLING SYSTEM

The ID number chosen by the customer is input to cancel the anti–theft system.

(Refer to the Owner’s Manual, “IF THE SYSTEM IS ACTIVATED”).

HINT: To change or cancel the ID number, please refer to the Owner’s Manual, ” CANCELLING THE SYSTEM”.

TROUBLESHOOTING

NOTICE: When replacing the internal mechanism (ECU part) of the audio system, be careful that no part of your body or clothing comes In contact with the terminals of the leads from the IC, etc. of the replacement part (spare part).

'HINT: This inspection procedure is a simple troubleshooting which should be carried out on the vehicle during system operation and was prepared on the assumption of system component troubles (except for the wires and connectors, etc.).

Always inspect the trouble taking the following items into consideration.

- Open or short circuit of the wire harness
- Connector or terminal connection fault
- For audio systems with anti–theft system, troubleshooting items marked (*) indicate that " Troubleshooting for ANTI–THEFT SYSTEM" should be carried out first.

	Problem	No.
Radio	No power coming in.	*1
	Power coming in, but radio not operating.	*2
	Noise present, but AM – FM not operating.	3
	Either speaker does not work	4
	Either AM or FM does not work.	5
	Reception poor (Volume faint).	5
	Few preset tuning bonds.	5
	Sound quality poor.	6
	Cannot set station select button.	6
	Preset memory disappears.	7
Tape Player	Cassette tape cannot be inserted.	8
	Cassette tape inserts, but no power.	*9
	Power coming in, but tape player not operating.	10
	Either speaker does not work.	11
	Sound quality poor (Volume faint).	12
	Tape jammed, malfunction with tape speed or auto–reverse.	13
	APS, SKIP, RPT buttons not operating.	14
	Cassette tape will not eject.	'15
CD Player	CD cannot be inserted.	16
	CD inserts, but no power.	17
	Power coming in, but CD player not operating.	18
	Sound jumps.	19
	Sound quality poor (Volume faint).	20
	Either speaker does not work.	21
	CD will not eject.	22
Antenna	Antenna does not fully extended or fully retract.	23
	Antenna – related.	24
Noise	Noise produced by vibration or shock while driving.	25
	Noise produced when engine starts.	26

Troubleshooting for ANTI–THEFT SYSTEM

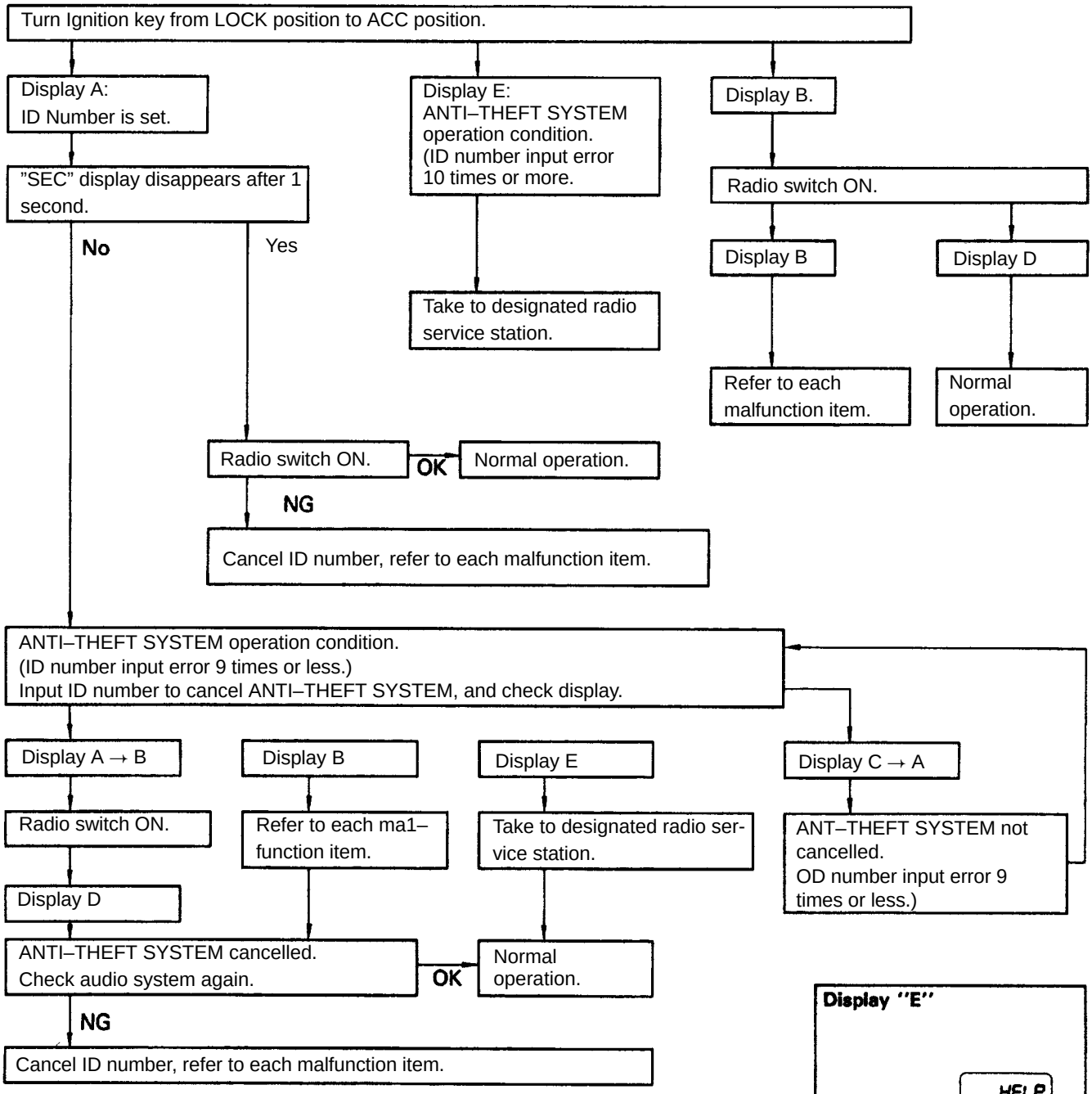

(Liquid Crystal Display (LCD) or VFD for Audio System)

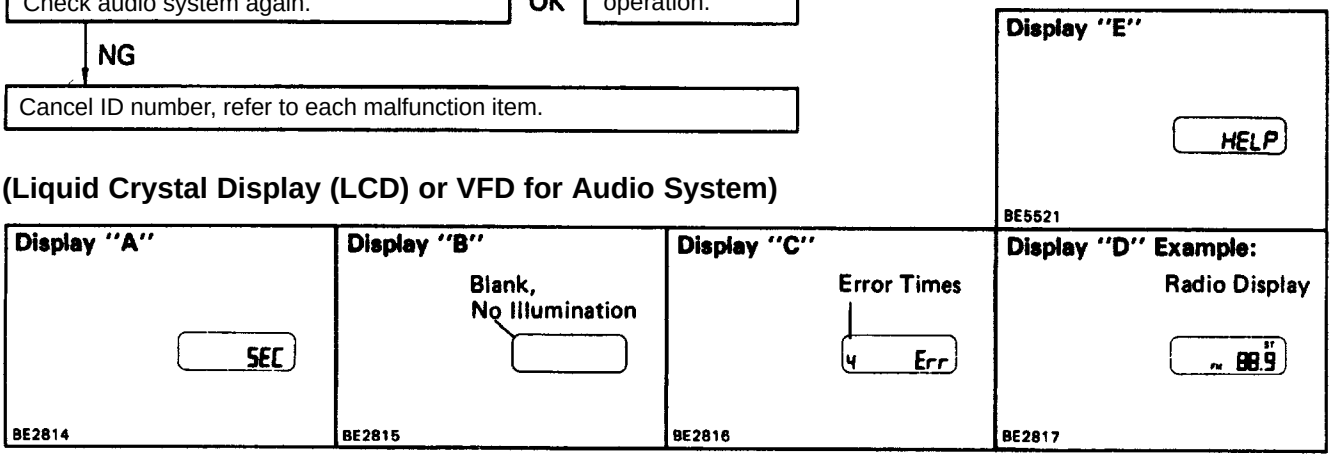

HINT:

- Refer to Owner's Manual for operation details of ANTI–THEFT SYSTEM.
- When the ID number has been cancelled, reset the same number after completing the operation, or inform the customer that it has been cancelled.

1 Radio NO POWER COMING IN

[R]: Radio [S]: Radio + Tape Player [U]: Radio–Tape Player (Built–in Power Amplifier)
[P]: Radio–Tape–CD Player (Separate Power Amplifier)

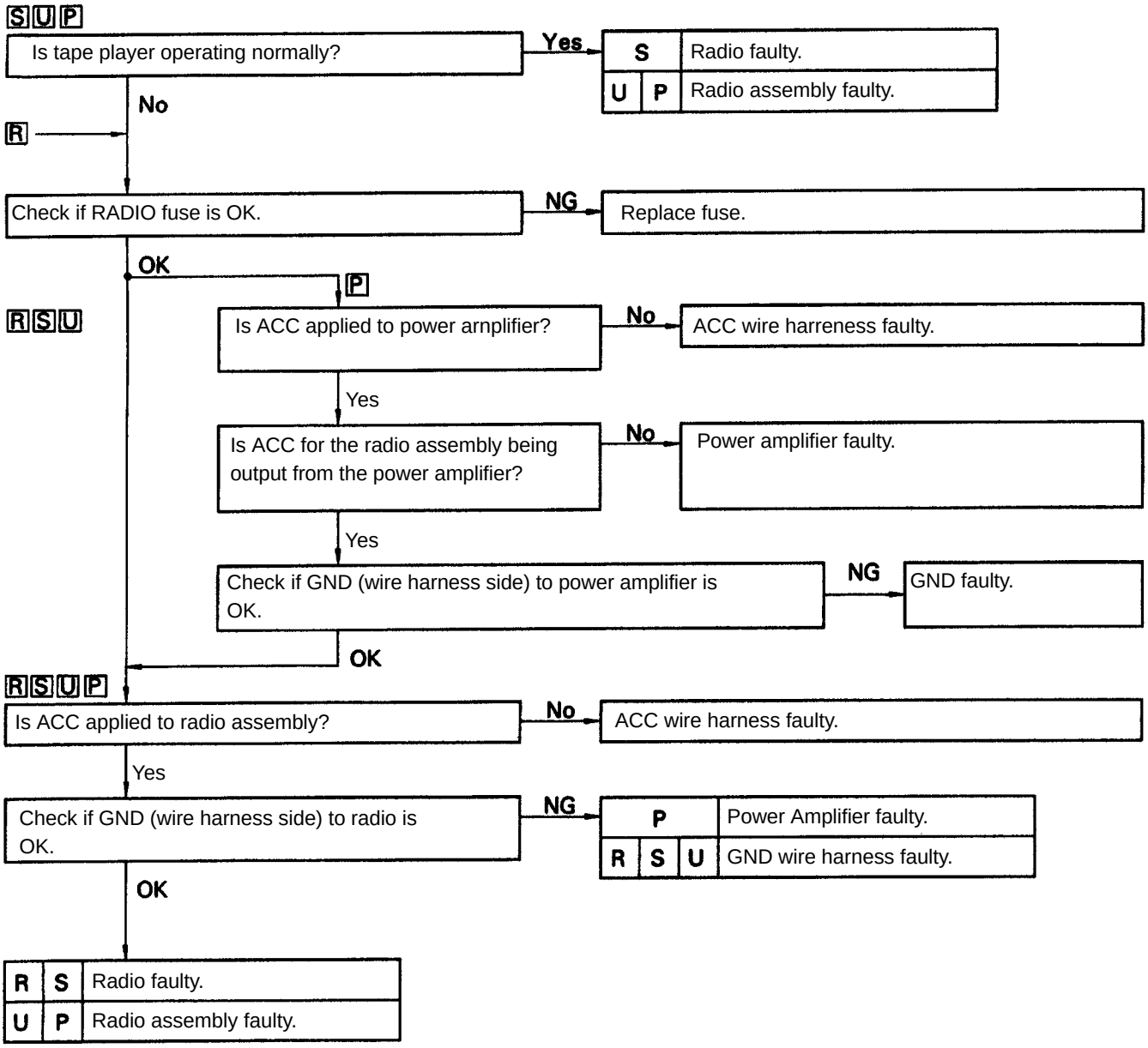

2 Radio — POWER COMING IN, BUT– RADIO NOT OPERATING

[R]: Radio [S]: Radio + Tape Player [U]: Radio–Tape Player (Built–in Power Amplifier)
[P]: Radio–Tape–CD Player (Separate Power Amplifier)

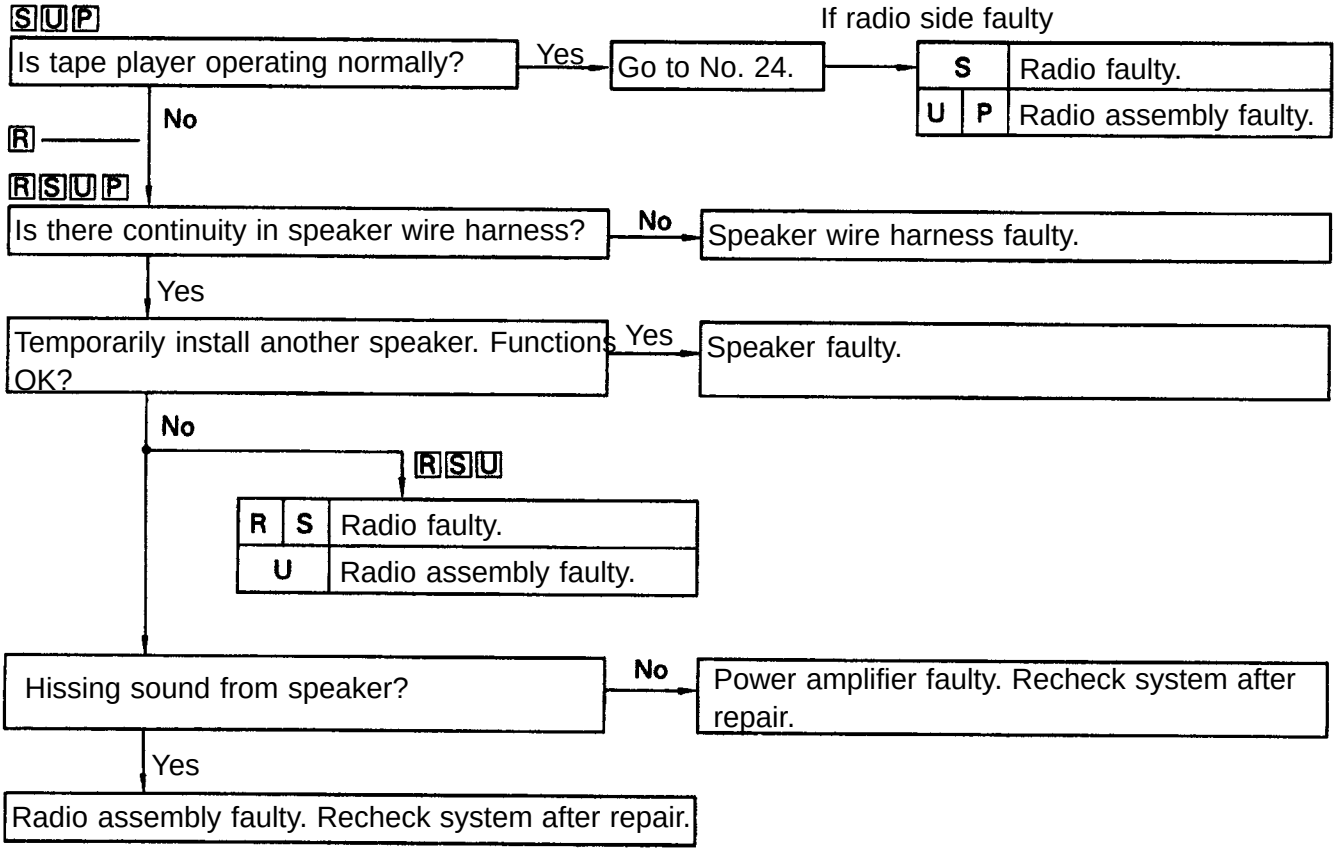

3 Radio — NOISE PRESENT, BUT AM–FM NOT OPERATING

[R]: Radio [S]: Radio + Tape Player [U]: Radio–Tape Player (Built–in Power Amplifier)
[P]: Radio–Type–CD Player (Separate Power Amplifier)

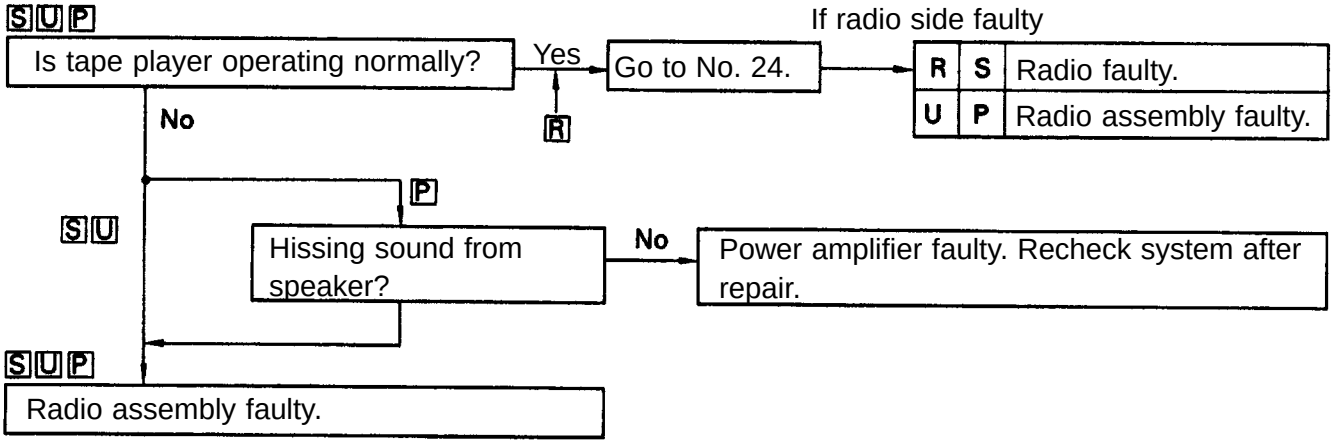

4	Radio	EITHER SPEAKER DOES NOT WORK

[R]: Radio [S]: Radio + Tape Player [U]: Radio–Tape Player (Built–in Power Amplifier)
[P]: Radio–Tape–CD Player (Separate Power Amplifier)

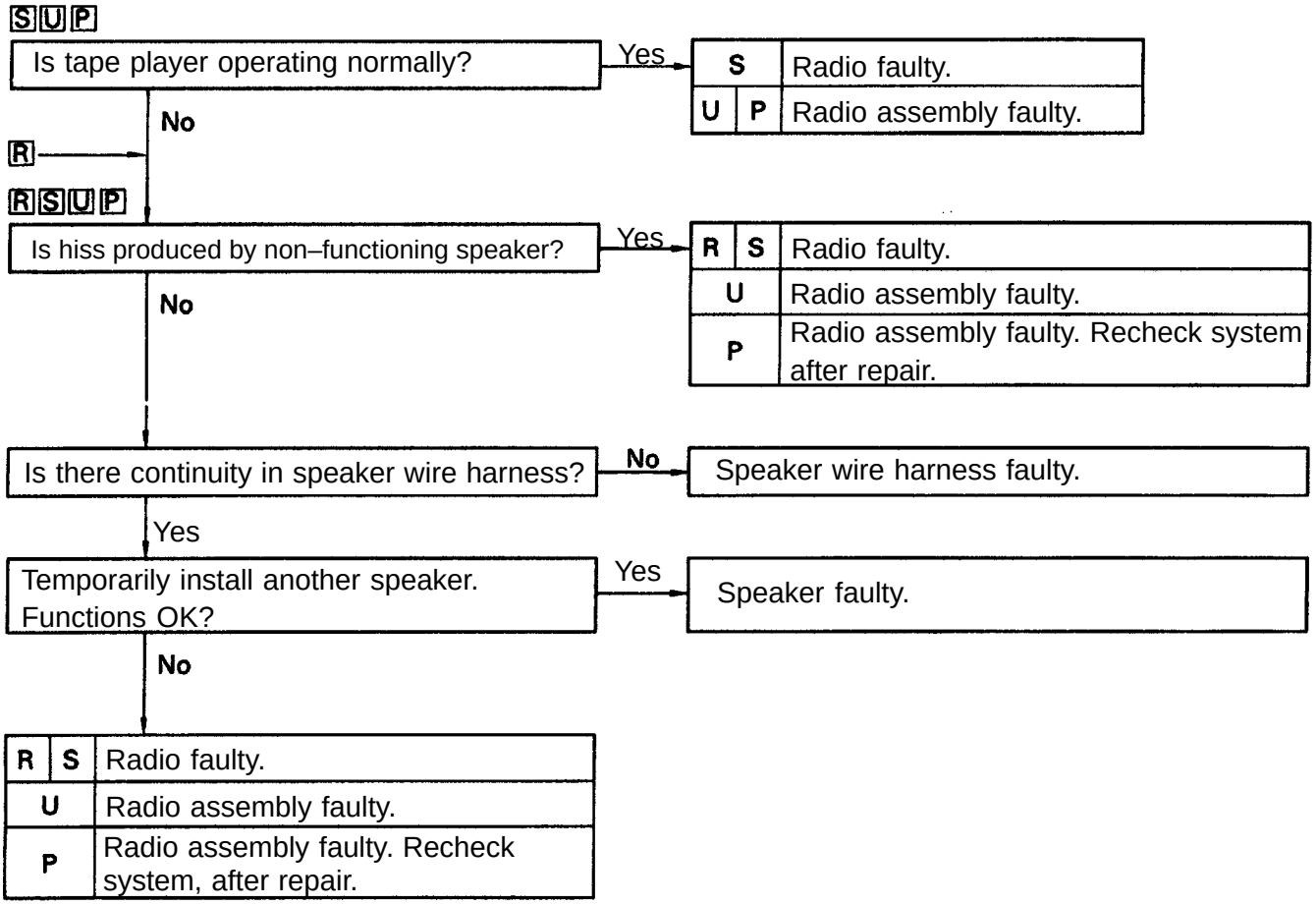

5	Radio	EITHER AM OR FM DOES NOT WORK, RECEPTION POOR (VOLUME FAINT), FEW PRESET TUNING BANDS

[R]: Radio [S]: Radio + Tape Player [U]: Radio–Tape Player (Built–in Power Amplifier)
[P]: Radio–Tape–CD Player (Separate Power Amplifier)

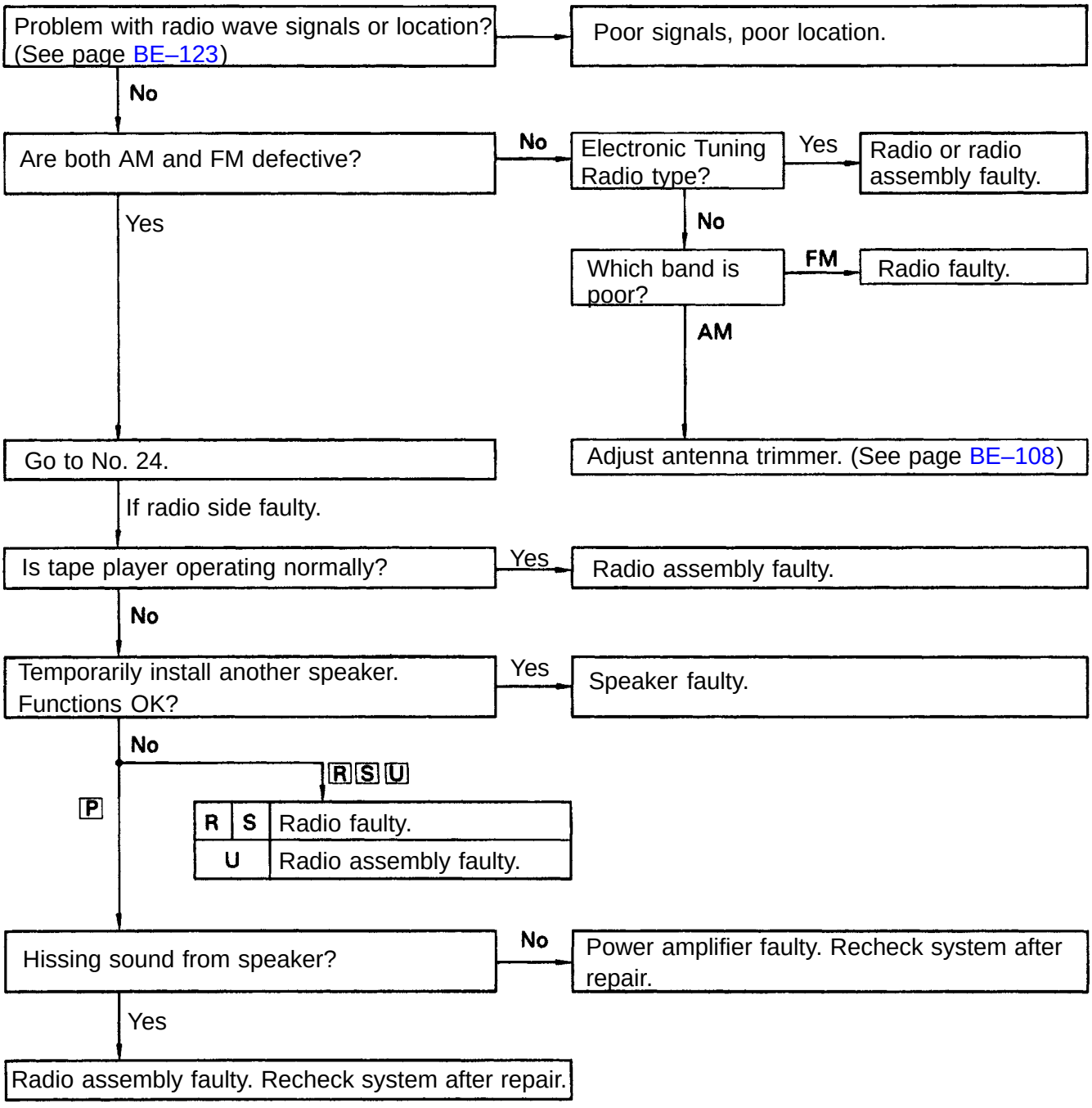

6	Radio	SOUND QUALITY POOR

[R]: Radio [S]: Radio + Tape Player [U]:Radio–Tape Player (Built–in Power Amplifier)
[P]: Radio–Tape–CD Player (Separate Power Amplifier)

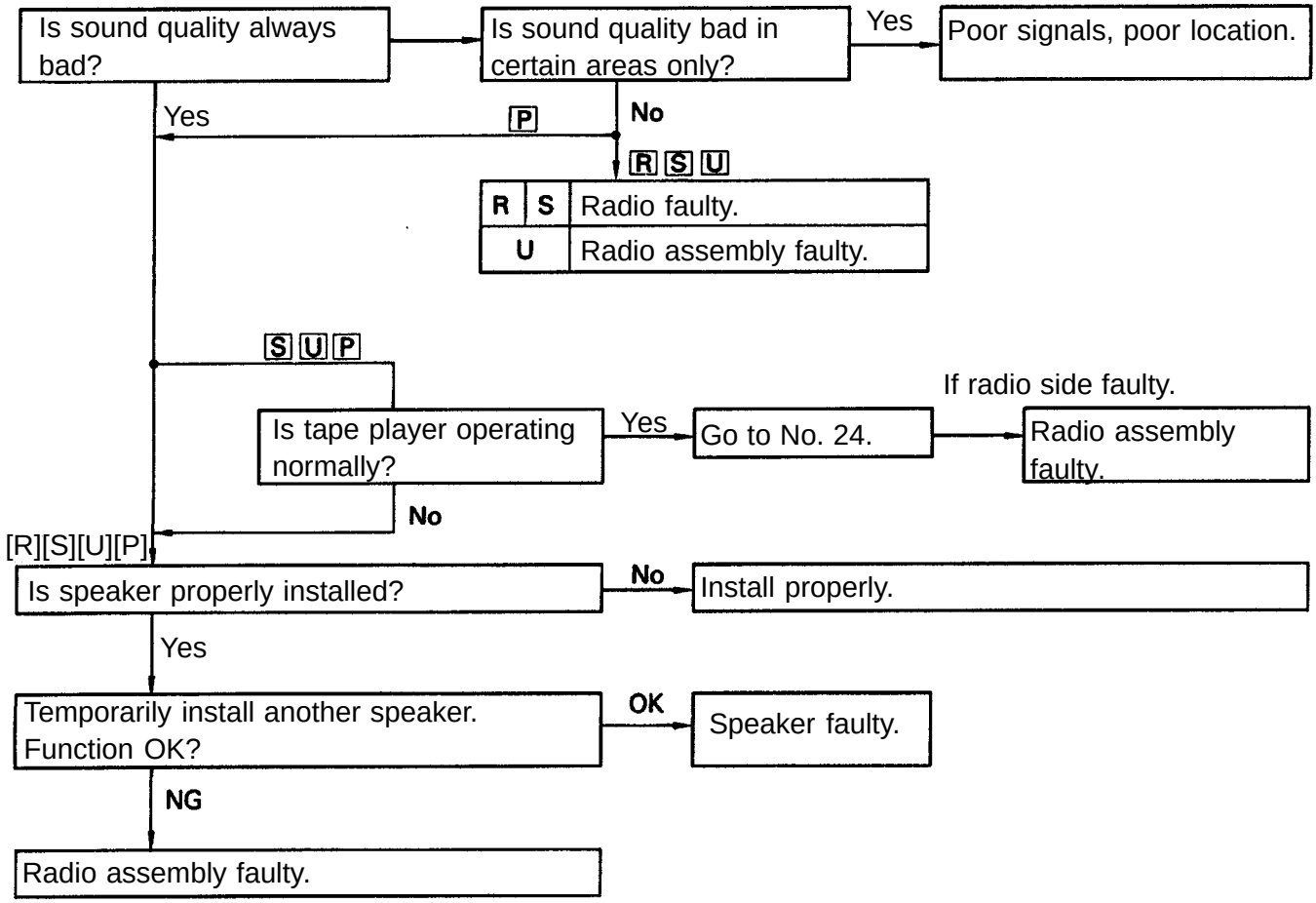

7	Radio	CANNOT SET STATION SELECT BUTTON, PRESET MEMORY DISAPPEARS

[R]: Radio [S]: Radio + Tape Player [U]: Radio–Tape Player (Built–in Power Amplifier)
[P]: Radio–Tape–CD Player (Separate Power Amplifier)

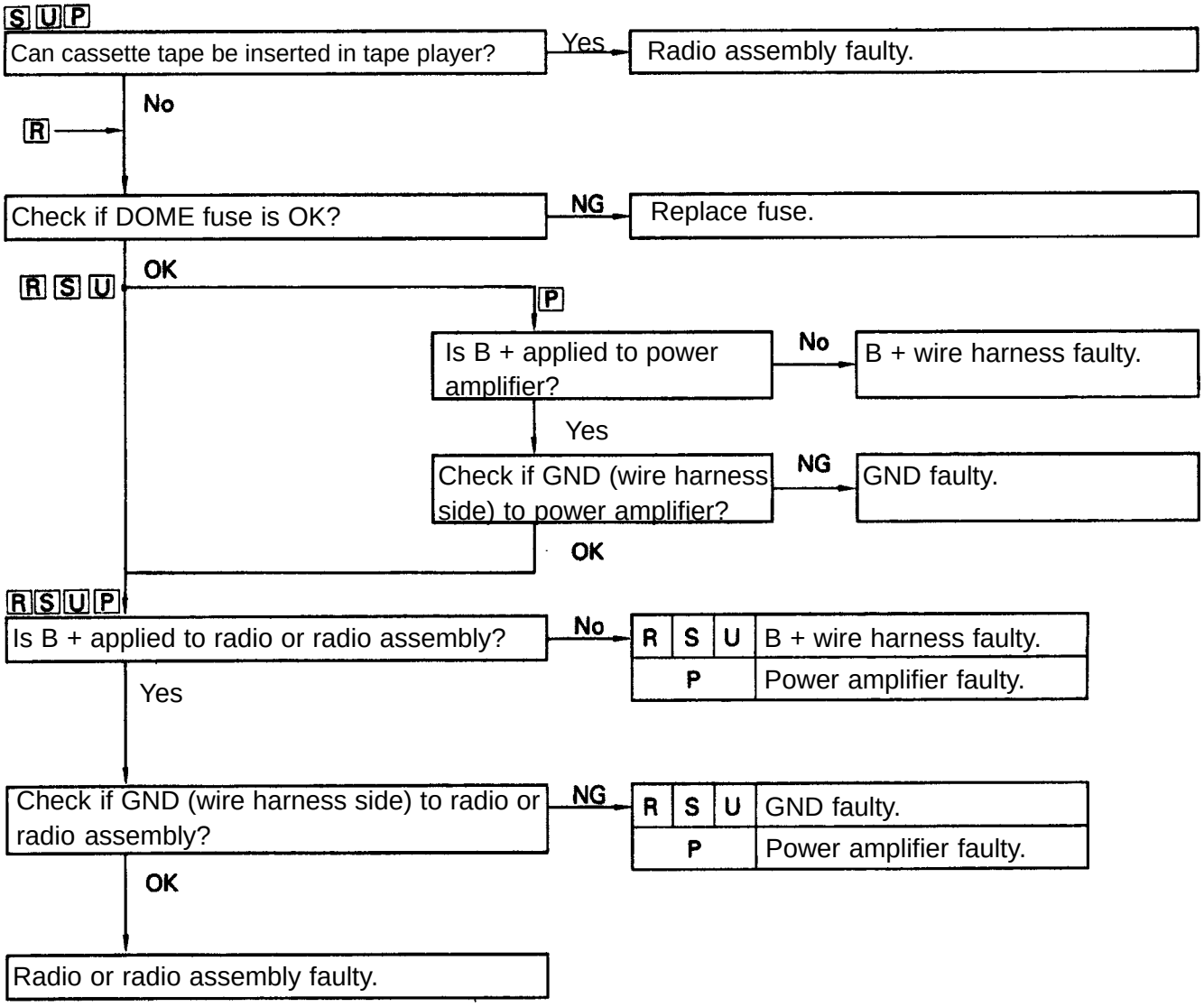

8	Tape Player	CASSETTE TAPE CANNOT BE INSERTED

[S]: Radio + Tape Player [U]: Radio–Tape Player (Built–in Power Amplifier)
[P]: Radio–Tape–CD Player (Separate Power Amplifier)

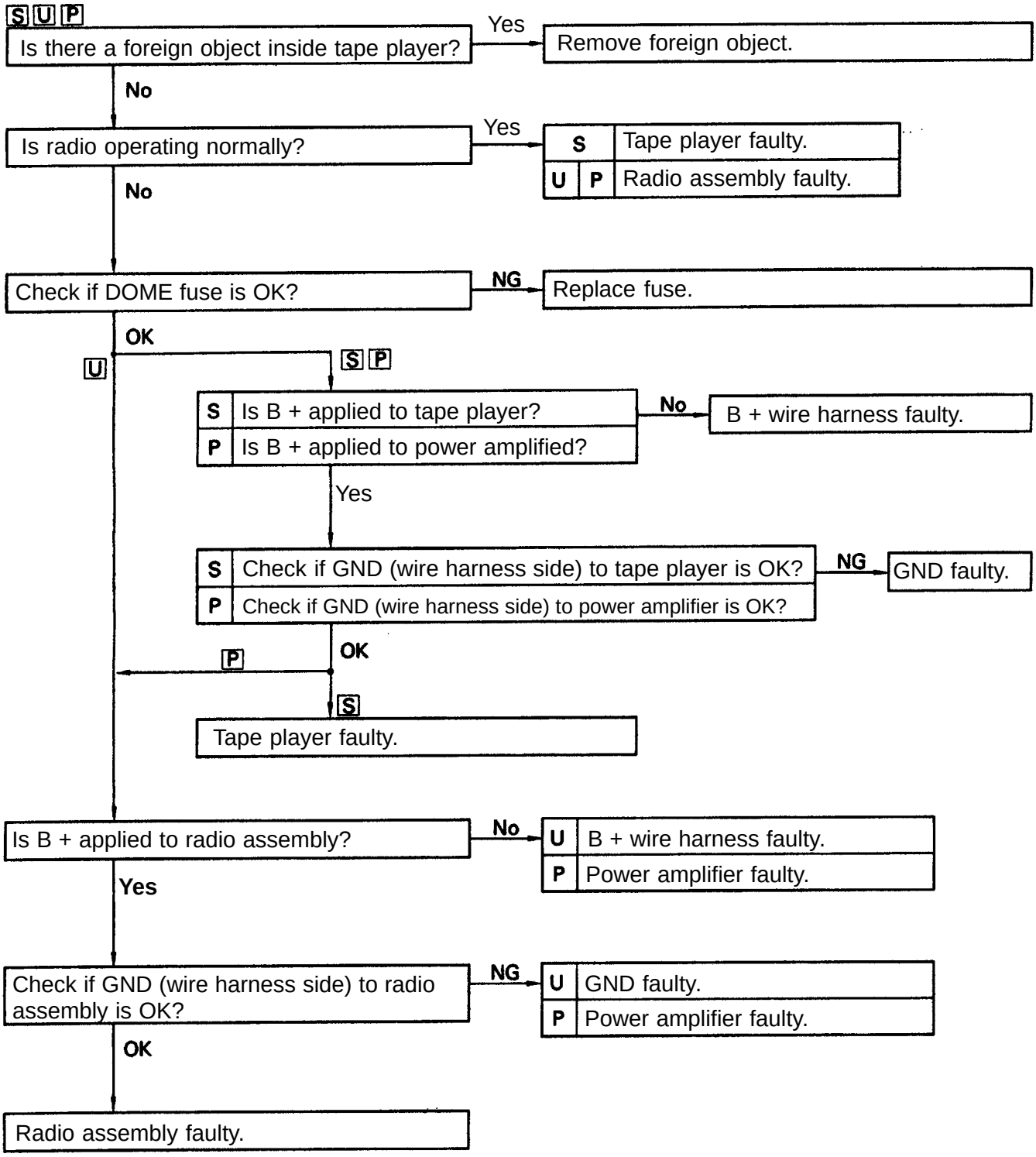

9	Tape Player	CASSETTE TAPE INSERTS, BUT NO POWER

[S]: Radio + Tape Player [U]: Radio–Tape Player (Built–in Power Amplifier)
[P]: Radio–Tape–CD Player (Separate Power Amplifier)

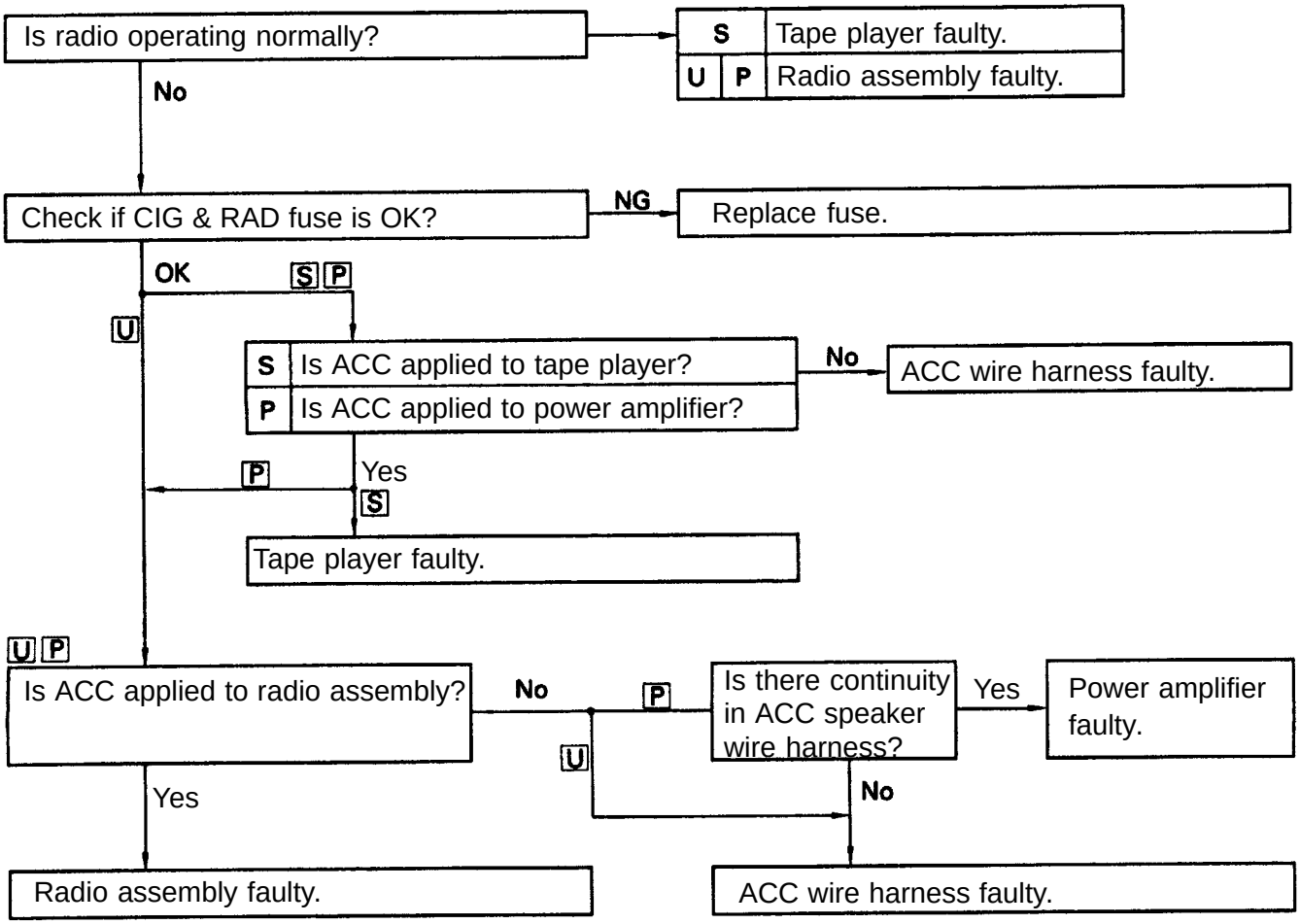

10	Tape Player	POWER COMING IN, BUT TAPE PLAYER NOT OPERATING

[S]: Radio + Tape Player [U]: Radio–Tape Player (Built–in Power Amplifier
[P]: Radio–Tape–CD Player (Separate Power Amplifier)

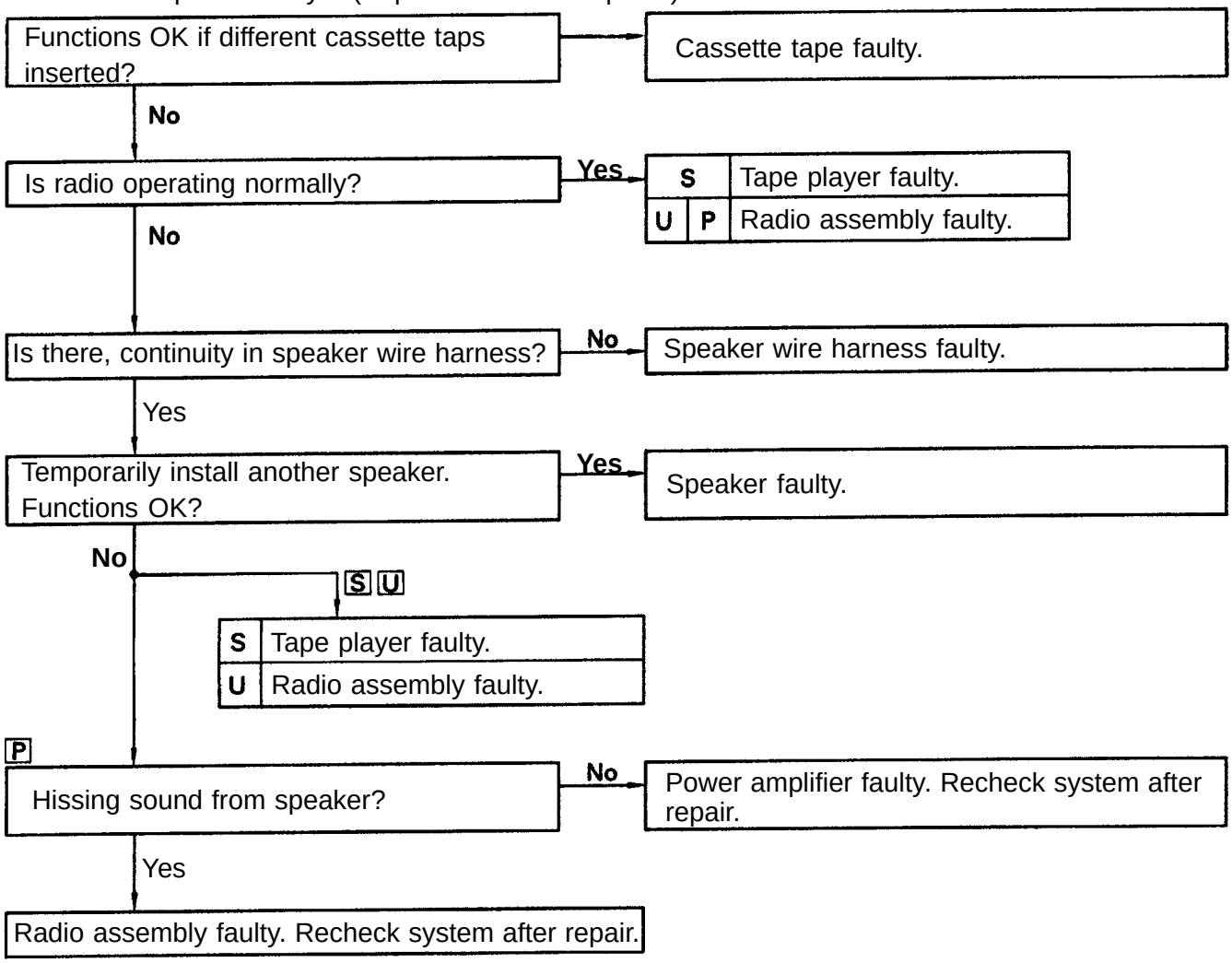

11	Tape Player	EITHER SPEAKER DOES NOT WORK

S: Radio + Tape Player U: Radio–Tape Player (Built–in Power Amplifier)
P: Radio–Tape–CD Player (Separate Power Amplifier)

Is radio operating normally?

es →

S		Tape player faulty.
U	P	Radio assembly faulty.

No ↓

Is hiss produced by non–functioning speaker?

Yes →

S	Tape player faulty.
U	Radio assembly faulty.
P	Radio assembly faulty. Recheck system after repair.

No ↓

Is there continuity in speaker wire harness?

No → Speaker wire harness faulty.

Yes ↓

Temporarily instal! another speaker.
Functions OK?

OK → Speaker faulty.

NG ↓

S	Tape player faulty?
U	Radio assembly faulty.
P	Radio assembly faulty. Recheck system after repair.

12	Tape Player	SOUND QUALITY POOR (VOLUME FAINT)

[S]: Radio + Tape Player [U]: Radio–Tape Player (Built–in Power Amplifier)
[P]: Radio–Tape–CD Player (Separate Power Amplifier)

Functions OK if different cassette tape inserted?
→ Yes: Cassette tape faulty.
↓ No

Operates normally after cleaning the heads? (See page BE–124)
→ Yes: Head dirty.
↓ No

Is radio operating normally?
→ Yes: Radio assembly faulty.
↓ No

Is speaker properly installed?
→ No: Install properly.
↓ Yes

Temporarily install another speaker. Functions OK?
→ Yes: Speaker faulty.
↓ No

S	Tape player faulty.
U	Radio assembly faulty.
P	Radio assembly faulty. Recheck system after repair.

13	Tape Player	TAPE JAMMED, MALFUNCTION WITH TAPE SPEED OR AUTO–REVERSE

[S]: Radio + Tape Player [U]: Radio–Tape Player (Built–in Power Amplifier)
[P]: Radio –Type –CD Player (Separate Power Amplifier)

Functions OK if different tape (less than 120 mins.) is inserted?
→ Yes: Cassette tape faulty.
↓ No

Is there a foreign object inside tape player?
→ Yes: Remove foreign object.
↓ No

Operates normally after cleaning the heads? (See page BE–124)
→ Yes: Head dirty.
↓ No

S		Tape player faulty.
U	P	Radio assembly faulty.

14 Tape Player — APS, SKIP, RPT BUTTONS NOT OPERATING

[S]: Radio + Tape Player [U]: Radio–Tape Player (Built–in Power Amplifier)
[P]: Radio–Tape–CD Player (Separate Power Amplifier)

Functions OK if different cassette tape inserted?
- No → Radio assembly faulty.
- Yes → Cassette tape faulty. (Less than 3 secs. of silence between songs (APS, RPT). Less than 15 secs. of silence (SKIP).)

15 Tape Player — CASSETTE TAPE WILL NOT EJECT

[S]: Radio + Tape Player [U]: Radio–Tape Player (Built–in Power Amplifier)
[P]: Radio–Tape–CD Player (Separate Power Amplifier)

Is tape player operating normally?
- No → Cassette tape jammed.
- Yes →

Is radio operating normally?
- Yes →
  - S: Tape player faulty.
  - U P: Radio assembly faulty.
- →

Check if DOME fuse is OK?
- NG → Replace fuse.
- OK →

Is B + applied to power amplifier?
- No → B + wire harness faulty.
- Yes →

S / U P: Is6 + applied to tape player? / Is B + applied to radio assembly?
- No [P] → Is there continuity in B + wire harness between power amplifier and radio assembly?
  - Yes → Power amplifier faulty.
  - No → B + wire harness faulty.
- [S] [U] →

Yes →
- S: Tape player faulty.
- U P: Radio assembly faulty.

16 CD Player — CD CANNOT BE INSERTED

- Is CD already inserted? — Yes → Eject CD.
- No → Is auto search button of radio operating normally?
  - Yes → Is B + applied to CD player?
    - No → Radio assembly faulty.
    - Yes → Check if GND (wire harness side) to CD player is OK?
      - NG → Radio assembly faulty.
      - OK → CD player faulty.
  - No → Check if DOME fuse is OK.
    - NG → Replace fuse.
    - OK → Is B + applied to to power amplifier?
      - No → B + wire harness faulty.
      - Yes → Check if GND (wire harness side) to power amplifier is OK?
        - NG → GND faulty.
        - OK → Is B + applied to radio assembly?
          - No → Power amplifier faulty.
          - Yes → Check if G ND (wire harness side) to radio assembly is OK?
            - NG → Power amplifier faulty.
            - OK → Radio assembly faulty.

17 CD Player — CD INSERTS, BUT NO POWER

- Is radio operating normally? — Yes → Is ACC applied to CD player?
  - No → Radio assembly faulty.
  - Yes → CD player faulty.
- No → Check if C IG & RAD fuse is OK?
  - NG → Replace fuse.
  - OK → Is ACC applied to power amplifier?
    - No → ACC wire harness faulty.
    - Yes → Is ACC applied to radio assembly?
      - No → Is there continuity in ACC wire harness between the radio assembly and the power amplifier?
        - No → ACC wire harness faulty.
        - Yes → Power amplifier faulty.
      - Yes → Radio assembly faulty.

18 CD Player — POWER COMING IN, BUT CD PLAYER NOT OPERATING

- Is CD inserted correct side up?
  - No → Insert correctly.
  - Yes ↓
- Functions OK if different CD inserted?
  - Yes → CD faulty.
  - No ↓
- Is radio operating normally?
  - Yes → Is temperature inside cabin hot?
    - Yes → Protective circuit in operation.
    - No ↓
  - Has sudden temperature change occurred inside cabin?
    - Yes → Formation of condensation due to temp. change.
    - No ↓
  - CD player faulty.
  - No ↓
- Is there continuity in speaker wire harness?
  - No → Speaker wire harness faulty.
  - Yes ↓
- Temporarily install another speaker. Functions OK?
  - Yes / No → Speaker faulty.
  - No ↓
- Hissing sound from speaker?
  - → Power amplifier faulty. Re-check system after repair.
  - Yes ↓

Radio assembly faulty. Re-check system after repair.

19 CD Player — SOUND JUMPS

- Does sound jump only during strong vibration?
  - Yes → Jumping caused by vibration.
  - No ↓
- Is CD player properly installed?
  - No → Install properly.
  - Yes ↓
- Functions OK if different CD inserted
  - Yes → CD faulty.
  - No ↓
- Has sudden temperature change occurred inside cabin?
  - Yes → Formation .of condensation due to temp. change.
  - No ↓

CD player faulty.

20 CD Player SOUND QUALITY POOR (VOLUME FAINT)

Functions OK if different CD inserted? — Yes → CD faulty.
↓ No
Is radio operating normally? — Yes → CD player faulty.
↓ No
Is speaker properly installed? — No → Install properly.
↓ Yes
Temporarily install another speaker. Functions OK? — Yes → Speaker faulty.
↓ No
Radio assembly faulty. Re–check system after repair.

21 CD Player EITHER SPEAKER DOES NOT WORK

Is radio operating normally? — Yes → CD player faulty.
↓ No
Is hiss produced by non-functioning speaker? — Yes → Radio assembly faulty. Recheck system after repair.
↓ No
Is there continuity in speaker wire harness? — No → Speaker wire harness faulty.
↓ Yes
Temporarily install another speaker. Functions OK. — Yes → Speaker faulty.
↓ No
Power amplifier faulty. Recheck system after repair.

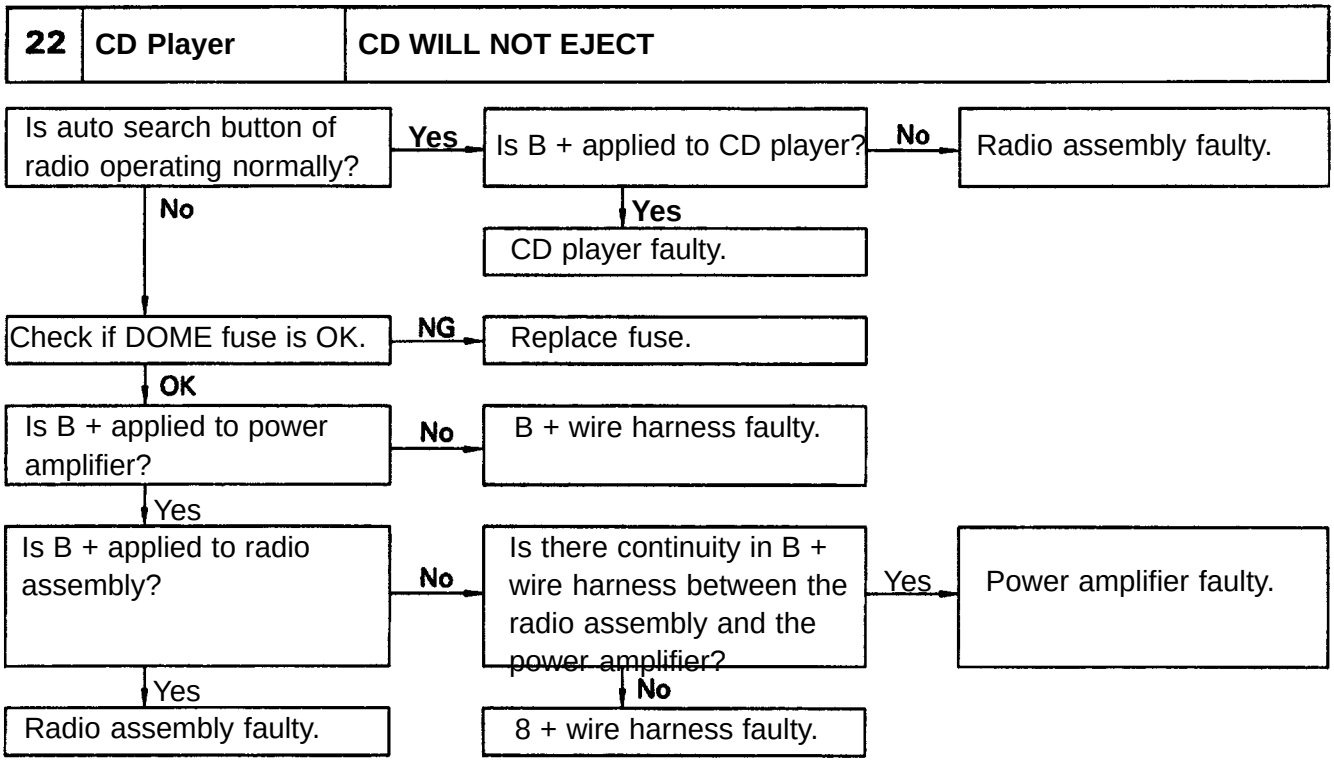
22
CD Player
CD WILL NOT EJECT
Is auto search button of radio operating normally?
Yes
Is B + applied to CD player?
No
Radio assembly faulty.
No
Yes
CD player faulty.
Check if DOME fuse is OK.
NG
Replace fuse.
OK
Is B + applied to power amplifier?
No
B + wire harness faulty.
Yes
Is B + applied to radio assembly?
No
Is there continuity in B + wire harness between the radio assembly and the power amplifier?
Yes
Power amplifier faulty.
Yes
No
Radio assembly faulty.
8 + wire harness faulty.

23	Antenna	ANTENNA DOES NOT FULLY EXTENDED OR FULLY RETRACT

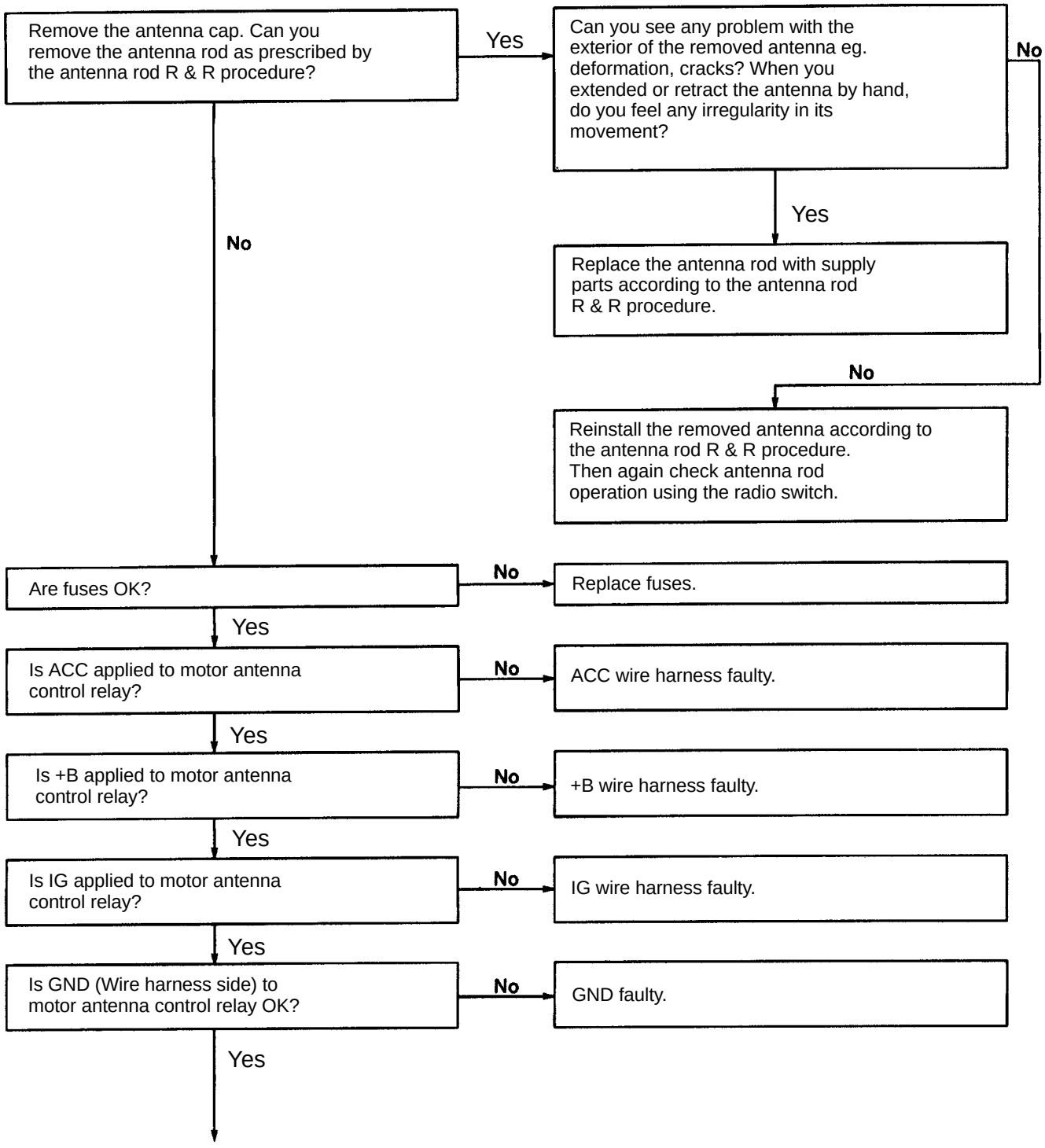

CONTINUED ON NEXT PAGE

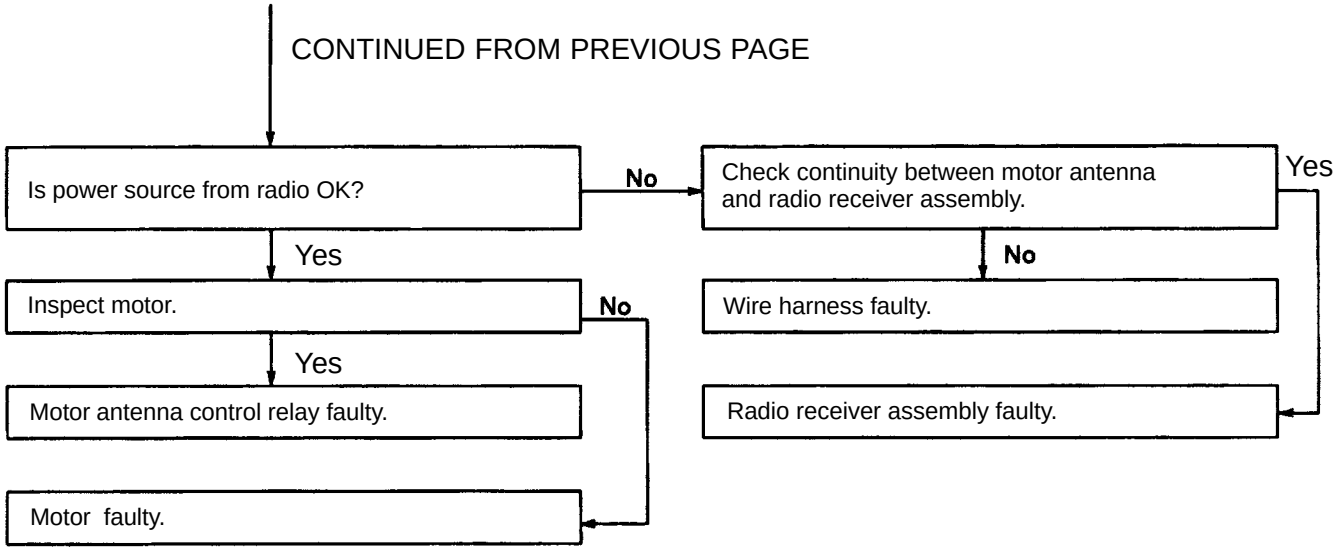
CONTINUED FROM PREVIOUS PAGE
Is power source from radio OK?
No
Check continuity between motor antenna and radio receiver assembly.
Yes
Yes
No
Inspect motor.
No
Wire harness faulty.
Yes
Motor antenna control relay faulty.
Radio receiver assembly faulty.
Motor faulty.

24	Antenna	ANTENNA–RELATED

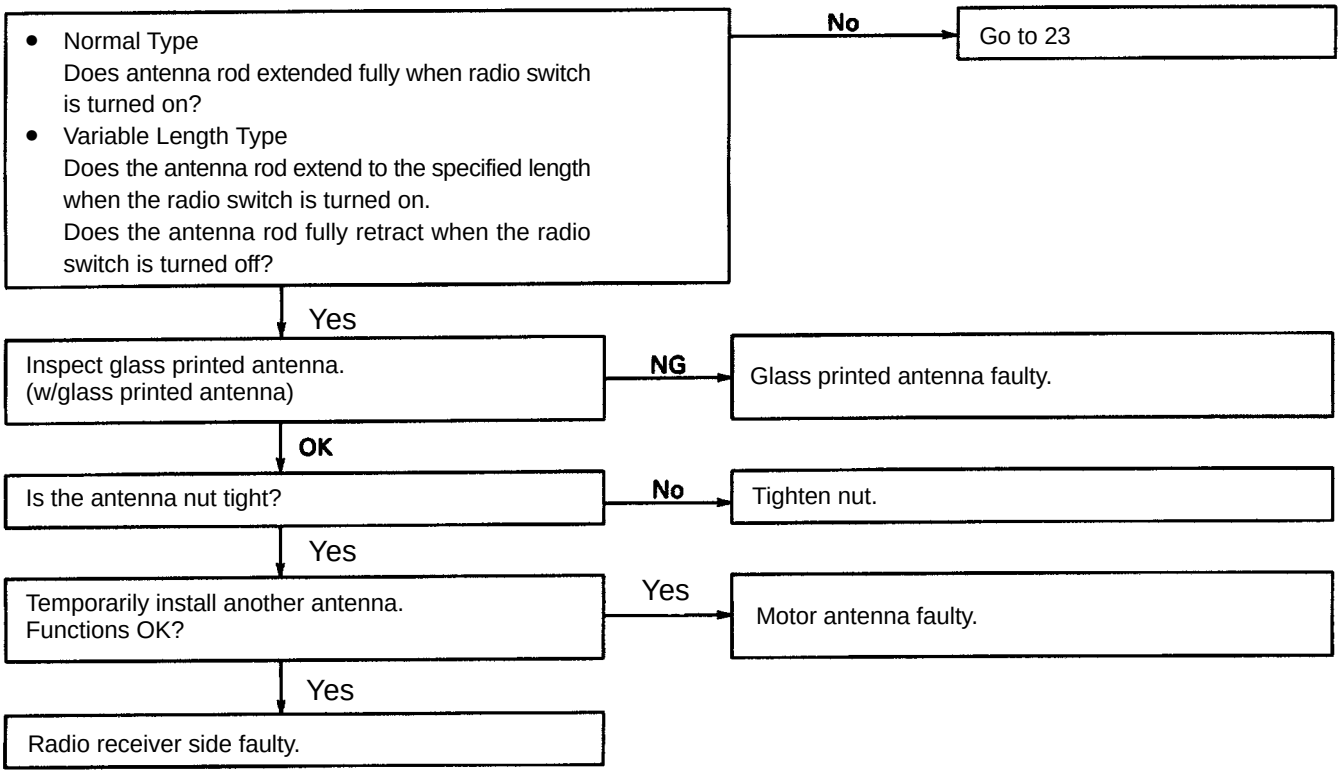

25	Noise	NOISE PRODUCED BY VIBRATION OR SHOCK WHILE DRIVING

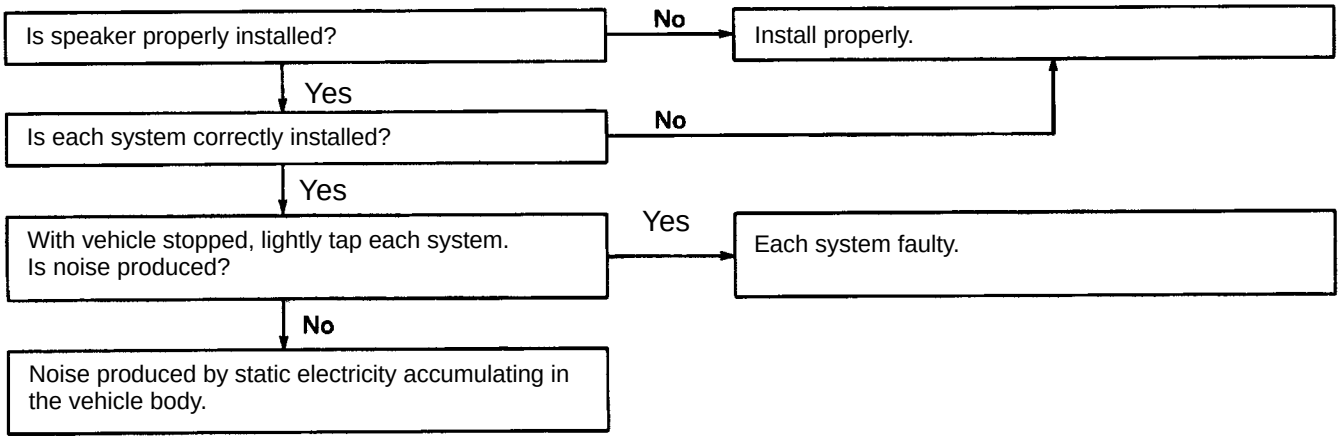

26	Noise	NOISE PRODUCED WHEN ENGINE STARTS

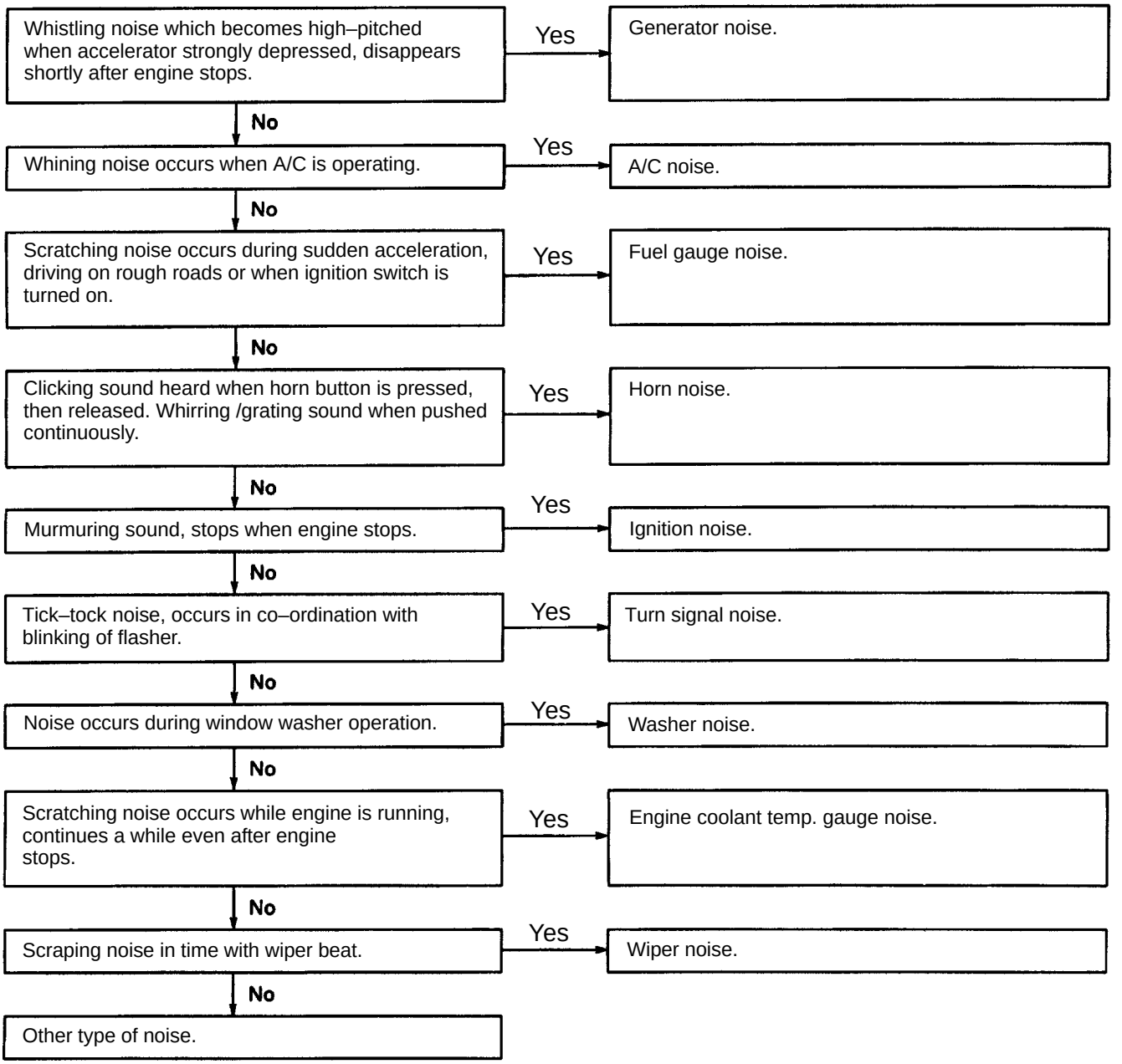

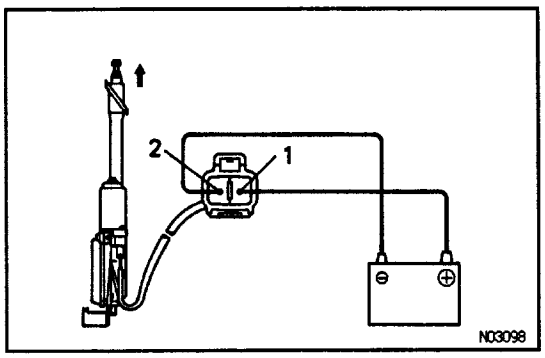

ANTENNA MOTOR INSPECTION

INSPECT ANTENNA MOTOR

(a) Connect the positive (+) lead from the battery to terminal 1 and the negative (–) lead to terminal 2.

(b) Check that the motor turns (moves upward).

NOTICE: These teats must be done quickly (within 3 – 5 seconds) to prevent the coil from burning out.

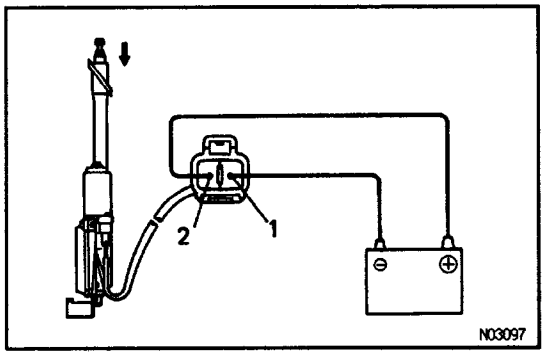

(c) Then, reverse the polarity, check that the motor turns the opposite way (moves downward).

NOTICE: These tests must be done quickly (within 3 – 5 seconds) to prevent the coil from burning out.

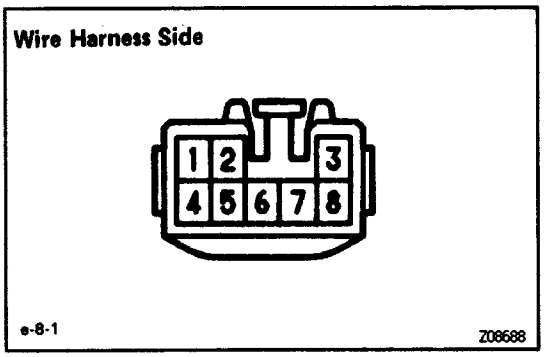

ANTENNA MOTOR CONTROL RELAY INSPECTION

INSPECT ANTENNA MOTOR CONTROL RELAY CIRCUIT

Disconnect the connector from the relay and inspect the connector onwire harness side, as shown in the chart below.

Tester connection to terminal number	Condition	Specified condition
2 — 3	**Constant**	**Continuity**
6 — Ground	**Constant**	**Continuity**

Tester connection to terminal number	Condition	Specified condition
3 – Ground	Constant	**Battery positive voltage**
4 – Ground	Ignition switch position LOCK or ACC	**No voltage**
4 – Ground	Ignition switch position ON	**Battery positive voltage**
5 – Ground	Ignition switch position LOCK	**No voltage**
5 – Ground	Ignition switch position ACC or ON	**Battery positive voltage**
7 – Ground	Ignition switch position LOCK	**No voltage**
7 – Ground	Ignition switch position ACC or ON (Radio switch and cassette OFF)	**No voltage**
7 – Ground	Ignition switch position ACC or ON (Radio switch or cassette ON)	**Battery positive voltage**
8 – Ground	Ignition switch position LOCK	**No voltage**
8 – Ground	Ignition switch position ACC or ON (Radio switch OFF or cassette ON)	**No voltage**
8 – Ground	Ignition switch position ACC or ON (Radio switch ON and cassette OFF)	**Battery positive voltage**

If circuit is as specified, replace the relay.

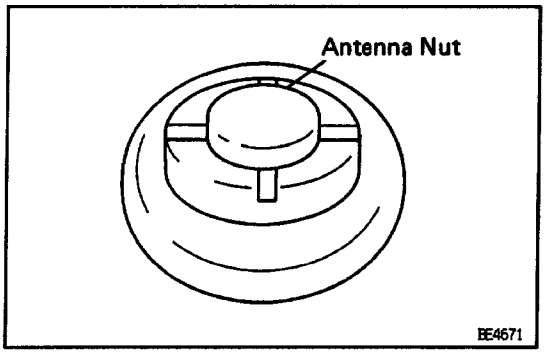

ANTENNA ROD REMOVAL AND INSTALLATION

1. REMOVE ANTENNA ROD

HINT: Do this operation with the battery negative (–) cable connected to the battery terminal.

(a) Turn the ignition switch to ”LOCK” position.

(b) Remove the antenna nut.

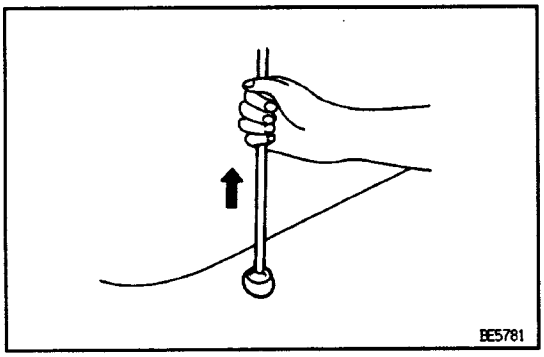

(c) w/ CD player:

Press the “AM, FM” buttons on the radio receiver, and simultaneously turn the ignition switch to ”ACC” position.

(d) w/o CD player:

Press the ”AM” button on the radio receiver, and simultaneously turn the ignition switch to ”ACC” position.

HINT:

- The rod will extend fully and be released from the motor antenna.
- After removing the antenna rod, leave the ignition switch as “ACC”.

NOTICE: To prevent body damage when the antenna rod is released, hold the rod while it comes out.

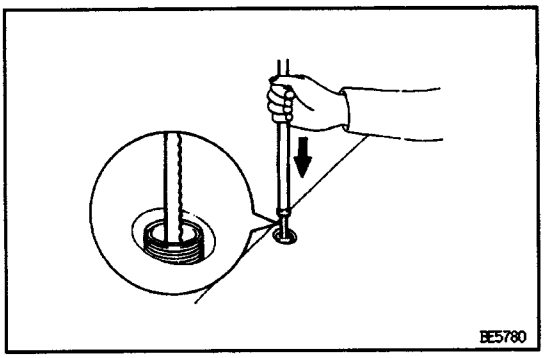

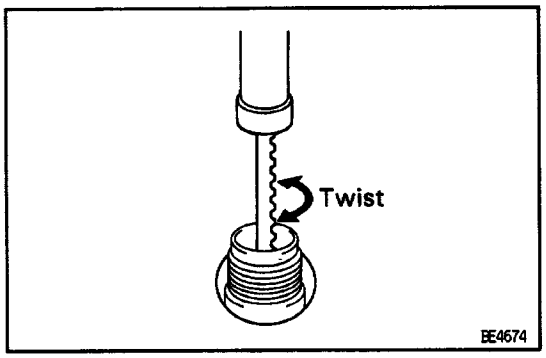

2. INSTALL ANTENNA ROD

(a) Insert the cable of the rod until it reaches the bottom.

HINT:

- When inserting the cable, the teeth on the cable must face toward the rear of the vehicle.
- Insert the antenna approx. 300 mm (11.8 in).

(b) Wind the cable to retract the rod by turning the ignition switch to ”LOCK” position.

HINT:

- If the ignition switch is already in ”LOCK” position, do step 1 (c) first, then turn the ignition switch to “ACC” position.
- In case the cable is not wound, twist it, as shown in the illustration.
- Even if the rod has not retracted fully, install the antenna nut and inspect the antenna rod operation. It will finally retract fully.

(c) Inspect the antenna rod operation by pushing the radio wave band select buttons.

BACK DOOR POWER WINDOW CONTROL SYSTEM

PARTS LOCATION

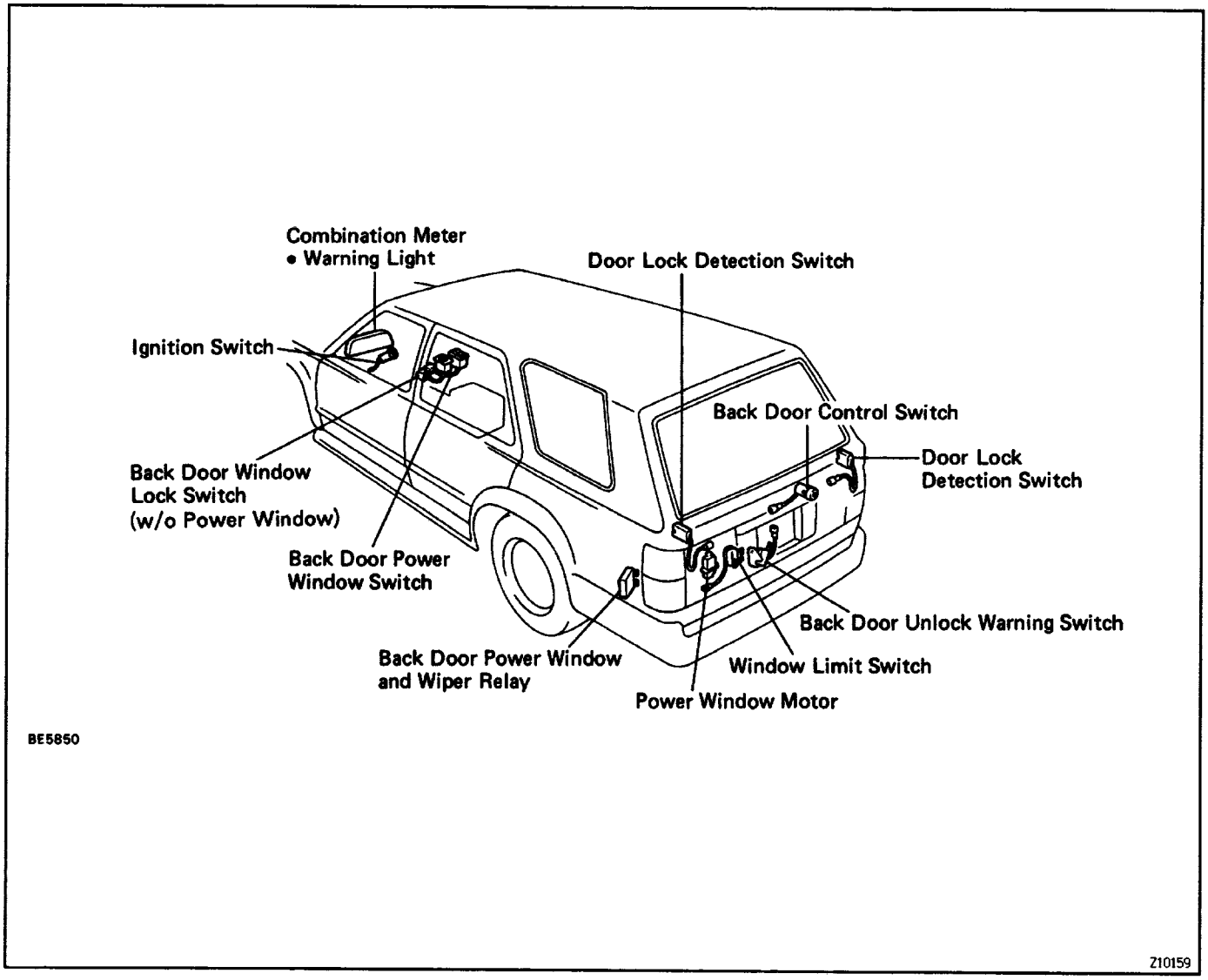

TROUBLESHOOTING

The table below will be useful for you in troubleshooting these electrical problems. The most likely causes of the malfunction are shown in the order of their probability. Inspect each part in the order shown, and replace the part when it is found to be faulty.

Trouble	Parts name	(See page)
Power window does not work	1. Fusible link	
	2. Circuit breaker OFF	
	3. WIPER Fuse	(BE–11)
	4. Power Window and Wiper Relay	(BE–74)
	5. Power Window Regulator Switch	(BE–70)
	6. Window Lock Switch (w/o Power Window)	(BE–71)
	7. Back Door Control Switch	(BE–71)
	8. Door Lock Detection Switch	(BE–72)
	9. Back Door Unlock Warning Switch	(BE–72)
	10. Power Window Motor	(BE–73)
	11. Rear Wiper Motor (w/ Rear Wiper)	(BE–43)
	12. Wire Harness	
Back Door Warning light does not Light (Ignition Switch ON)	1. GAUGE Fuse	(BE–11)
	2. Light Bulb Burned Out	
	3. Door Lock Detection Switch (Back Door Opened)	(BE–72)
	4. Back Door Unlock warning Switch (Back Door Unlocked)	(BE–72)
	5. Power Window and Wiper Relay	(BE–74)
	6. Wire Harness	
Back Door Unlock Warning Buzzer does not blow	1. WIPER Fuse	(BE–11)
	2. Door Lock Detection Switch	(BE–72)
	3. Power Window Regulator Switch	(BE–70)
	4. Back Door Control Switch	(BE–71)
	5. Power Window and Wiper Relay	(BE–74)
	8. Wire Harness	

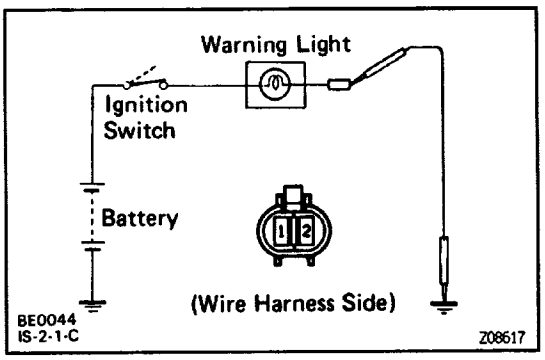

BACK DOOR WARNING LIGHT INSPECTION

INSPECT BACK DOOR WARNING LIGHT

(a) Disconnect the connector from the back door unlock warning switch and ground the terminal 1 of the wire harness side connector.

(b) Turn the ignition switch on and check that the bulb lights. If operation is not as specified, remove and test the bulb.

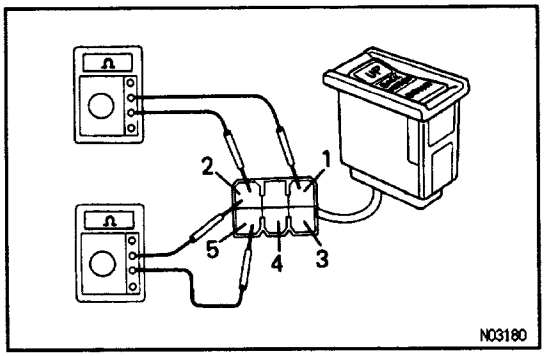

POWER WINDOW REGULATOR SWITCH INSPECTION

INSPECT POWER WINDOW REGULATOR SWITCH CONTINUITY

Switch position	Tester connection to terminal number	Specified condition
UP	2 – 5	Continuity
OFF	–	No continuity
DOWN	1 – 2	Continuity
Illumination circuit (UP, OFF, DOWN)	3 – 4	Continuity

If continuity is not as specified, replace the switch.

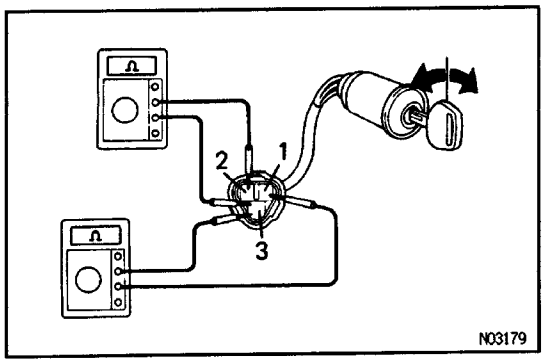

BACK DOOR CONTROL SWITCH INSPECTION

INSPECT BACK DOOR CONTROL SWITCH CONTINUITY

Switch position	Tester connection to terminal number	Specified condition
Turn to right	**2 – 3**	**Continuity**
OFF	**–**	**No continuity**
Turn to left	**1 – 3**	**Continuity**

If continuity is not as specified, replace the switch.

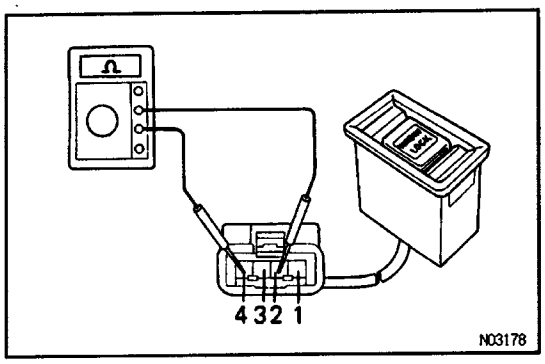

w/o Power Window
BACK DOOR WINDOW LOCK SWITCH INSPECTION

INSPECT BACK DOOR WINDOW LOCK SWITCH CONTINUITY

Switch position	Tester connection to terminal number	Specified condition
FREE	**2 – 4**	**Continuity**
LOCK	**–**	**No continuity**
Illumination circuit (FREE, LOCK)	**1 – 3**	**Continuity**

If continuity is not as specified, replace the switch.

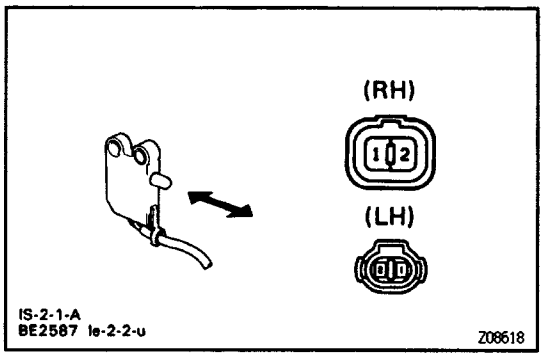

DOOR LOCK DETECTION SWITCH INSPECTION

INSPECT DOOR LOCK DETECTION SWITCH CONTINUITY

Switch position	Tester connection to terminal number	Specified condition
Switch pin pushed in (Door closed)	–	**No continuity**
Switch pin released (Door opened)	**1 – 2**	**Continuity**

If continuity is not as specified, replace the switch.

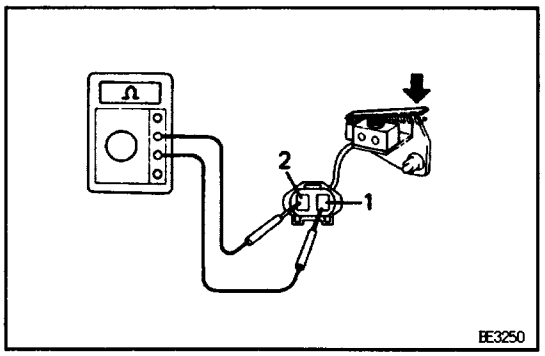

BACK DOOR UNLOCK WARNING SWITCH INSPECTION

INSPECT BACK DOOR UNLOCK WARNING SWITCH CONTINUITY

Switch position	Tester connection to terminal number	Specified condition
Switch pin pushed (Back door unlocked)	**1 – 2**	**Continuity**
Switch pin released (Back door locked)	–	**No continuity**

If continuity is not as specified, replace the switch.

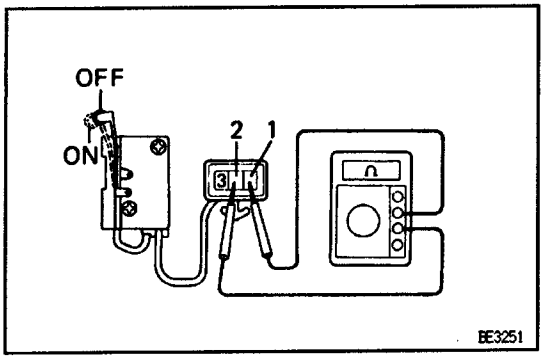

WINDOW LIMIT SWITCH INSPECTION

INSPECT WINDOW LIMIT SWITCH CONTINUITY

Switch position	Tester connection to terminal number	Specified condition
Switch lever pushed (OFF position)	–	**No continuity**
Switch lever released (ON position)	**1 – 2**	**Continuity**

If continuity is not as specified, replace the switch.

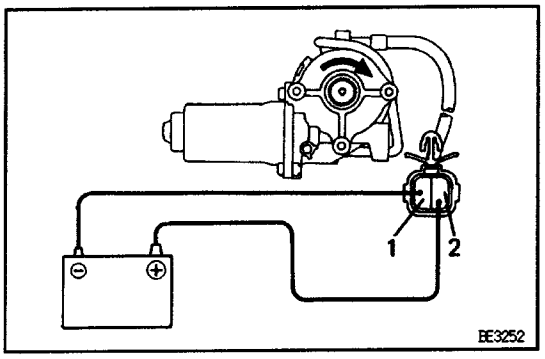

POWER WINDOW MOTOR INSPECTION

INSPECT POWER WINDOW MOTOR OPERATION

(a) Connect the positive (+) lead from the battery to terminal 2 and the negative (–) lead to terminal 1 and check that the motor turns clockwise.

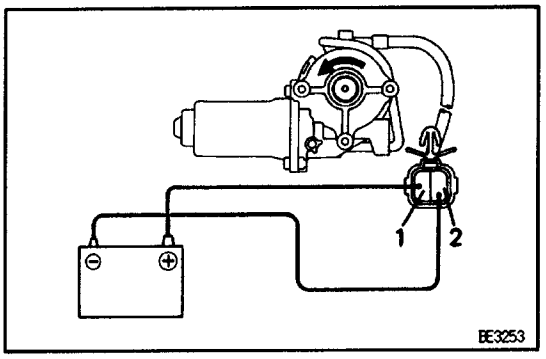

(b) Connect the positive (+) lead from the battery to terminal 1 and the negative (–) lead to terminal 2 and check that the motor turns counterclockwise.
If operation is not as specified, replace the motor.

POWER WINDOW AND WIPER RELAY INSPECTION

INSPECT POWER WINDOW AND WIPER RELAY CIRCUIT

HINT: Disconnect the connector, inspect on the wire harness side.

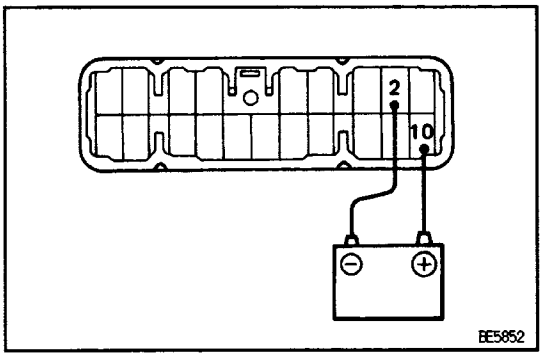

Wiper Motor

Apply battery positive voltage between terminals 2 and 10, check that the wiper motor turns.
If does not operate, inspect the wire harness and motor, then if they are OK, replace the relay.

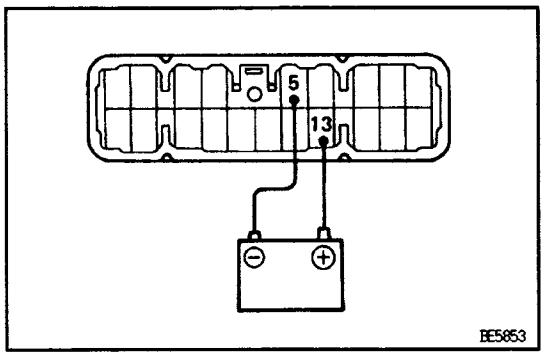

Power Window Motor

Apply battery positive voltage between terminals 5 and 13, check that the power window motor turns.
If does not operate, inspect the wire harness and motor, then if they are OK, replace the relay.

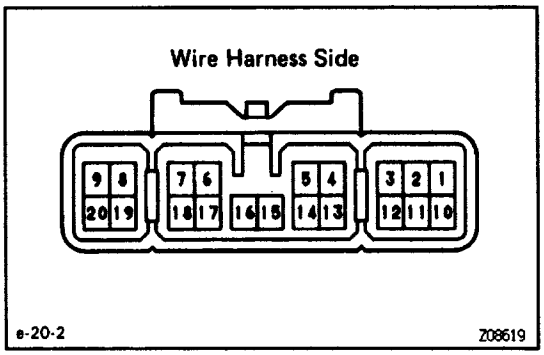

Other Wire Harness

Inspect the connector on the wire harness side shown in the chart on next page.

w/o Rear wiper

Tester connection to terminal number	Condition	Specified condition
3 — Body ground	—	**Continuity**
6 — Body ground	Door lock detection switch to LOCK (Back door close) and power window switch to DOWN (Window downy	**Continuity**
6 — Body ground	Door lock detection switch to UNLOCK (Back door open) or power window switch to any position except DOWN (Window not down)	**No continuity**
7 — Body ground	Door lock detection switch to LOCK (Back door close) and power window switch to UP (Window up)	**Continuity**
7 — Body ground	Door lock detection switch to UNLOCK (Back door open) or power window switch to any position except UP (Window not up)	**No continuity**
9 — Body ground	Door lock detection switch to LOCK (Back door close) and door control switch to DOWN (Window down)	**Continuity**
9 — Body ground	Door lock detection switch to UNLOCK (Back door open) or door control switch to any position except DOWN (Window not down)	**No continuity**
11 — Body ground	Back door unlock switch ON	**Continuity**
11 — Body ground	Back door unlock switch OFF	**No continuity**
12 — Body ground	Door lock detection switch to LOCK (Back door close)	**Continuity**
12 — Body ground	Door lock detection switch to UNLOCK (Back door open)	**No continuity**
17 — Body ground	Door lock detection switch to LOCK (Back door close) and door control switch to UP (Window up)	**Continuity**
17 — Body ground	Door lock detection switch to UNLOCK (Back door open) or door control switch to any position except UP (Window not up)	**No continuity**
1 — Body ground	Ignition switch ON	**Battery positive voltage**
1 — Body ground	Ignition switch OFF	**No voltage**
4 — Body ground	—	**Battery positive voltage**

If circuit operation is correct, replace the relay.

w/ Rear Wiper

Tester connection to terminal number	Condition	Specified condition
2 – Body ground	Rear window washer switch 4N	Continuity
2 – Body ground	Rear window washer switch OFF	No continuity
3 – Body ground	–	Continuity
6 – Body ground	Door lock detection switch to LOCK (Back door close) and power window switch to DOWN (Window down)	Continuity
6 – Body ground	Door lock detection switch to UNLOCK (Back door open) or power window switch to any position except DOWN (Window not down)	No continuity
7 – Body ground	Door lock detection switch to LOCK (Back Door close) and power window switch to UP (Window up)	Continuity
7 – Body ground	Door lock detection switch to UNLOCK (Back door open) or window regulator switch to any position except UP (Window not up)	No continuity
8 – Body ground	Power window limit switch ON	Continuity
8 – Body ground	Power window limit switch OFF	No continuity
9 – Body ground	Door lock detection switch to LOCK (Back door close) and door control switch to DOWN (Window down)	Continuity
9 – Body ground	Door lock detection switch to UNLOCK (Back door open) or door control switch to any positive except DOWN (Window not down)	No continuity
11 – Body ground	Back door unlock switch ON	Continuity
11 – Body ground	Back door unlock switch OFF	No continuity
12 – Body ground	Door lock detection switch to LOCK (Back door close)	Continuity
12 – Body ground	Door lock detection switch to UNLOCK (Back door open)	No continuity
14 – 19	Rear wiper arm rise up position	Continuity
14 – 19	Except this wiper arm rise up position	No continuity
17 – Body ground	Door lock detection switch to LOCK (Back door close) and door control switch to UP (Window up)	Continuity
17 – Body ground	Door lock detection switch to UNLOCK (Back door open) or door control switch to any position except UP (Window not up)	No continuity
18 – Body ground	Rear window wiper switch INT	Continuity
18 – Body ground	Rear window wiper switch OFF	No continuity
20 – Body ground	Rear window wiper switch ON	Continuity
20 – Body ground	Rear window wiper switch OFF	No continuity

Tester connection to terminal number	Condition	Specified condition
1 – Body ground	Ignition switch ON	**Battery positive voltage**
1 – Body ground	Ignition switch OFF	**No voltage**
4 – Body ground	–	**Battery positive voltage**

If circuit operation is correct, replace the relay.

BACK–UP LIGHT SYSTEM

PARTS LOCATION

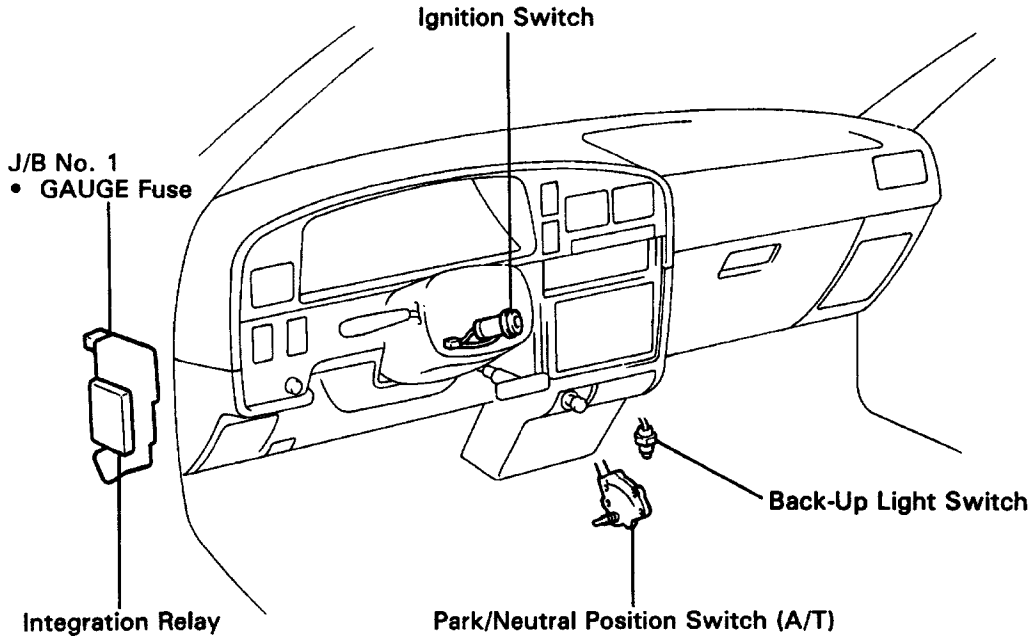

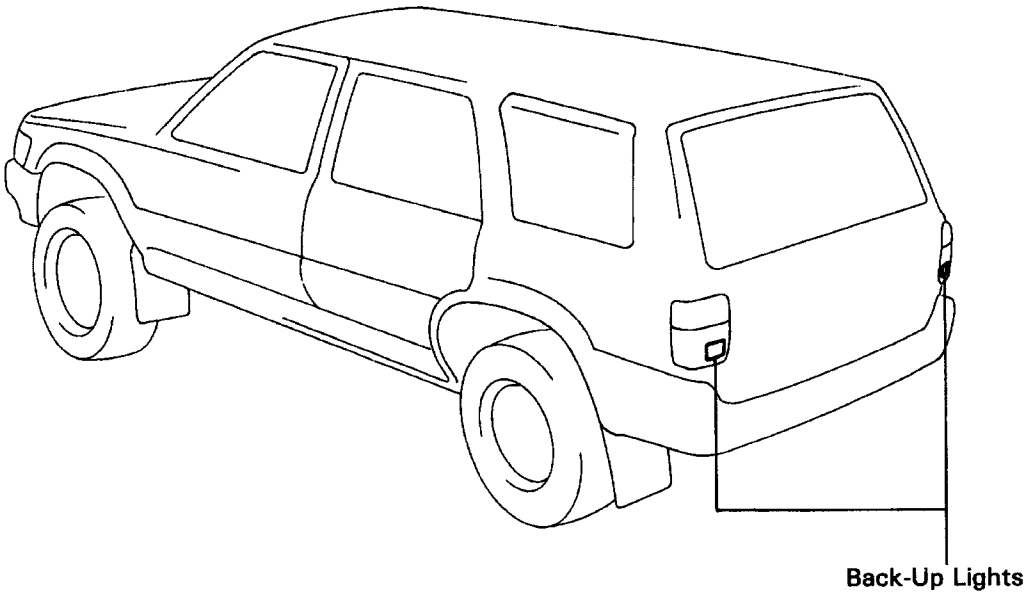

N08311
N08312

Z08546

TROUBLESHOOTING

The table below will be useful for you in troubleshooting these electrical problems. The most likely causes of the malfunction are shown in the order of their probability. Inspect each part in the order shown, and replace the part when it is found to be faulty.

Trouble	Parts name (See page)
Back–Up Light does not light up	1. Bulb 2. GAUGE Fuse (BE–11) 3. Ignition Switch (BE–12) 4. Park/ Neutral Position Switch (A/T)* 5. Back–Up Light Switch (M/T) (BE–37) 6. Wire Harness
Back–Up Light remains always on	1.Wire Harness
Only one light does not light up	1. Bulb 2. Wire Harness

* See page AT2–40 (A340H)
See page AT1–41 (A340E, A340F)

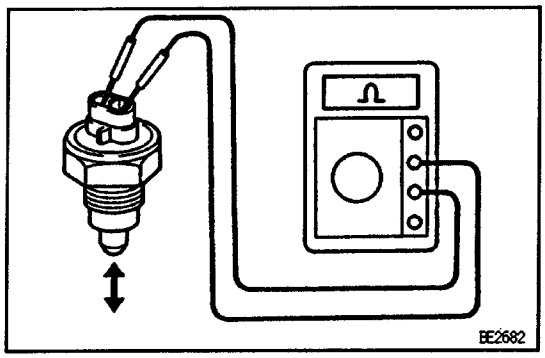

BACK–UP LIGHT SWITCH INSPECTION

INSPECT BACK–UP LIGHT SWITCH

Check that there is continuity between terminals, as shown.

Switch position	Specified
Push	**Continuity**
Free	**No continuity**

If continuity is not as specified, replace the switch.

PARK/ NEUTRAL POSITION SWITCH INSPECTION

See Park/ Neutral Position Switch on page AT2–40, AT1–41

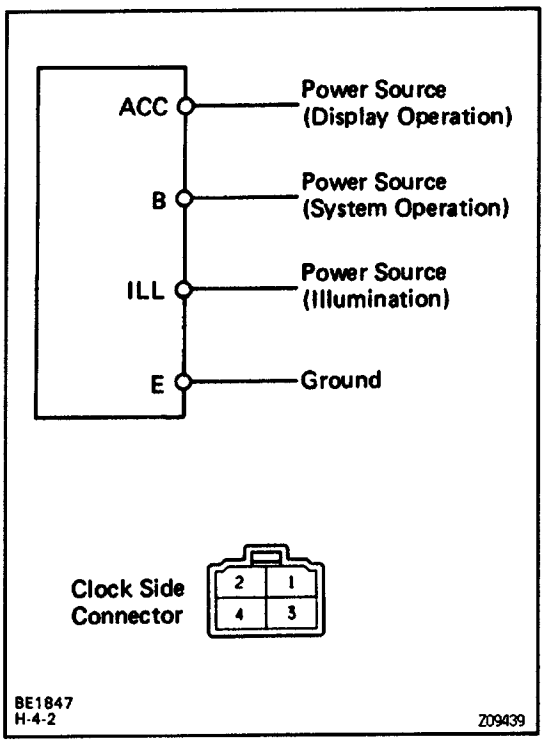

CLOCK

TROUBLESHOOTING

As shown in the illustration, those are clock circuit and connector diagrams. Inspect each terminal for applicable trouble.

Allowable error: ±1.5 seconds/day

Terminals		Condition	Specified Condition
1	E	Constant	Continuity
2	ILL	Turn light control switch ON	Battery positive voltage
3	B	Constant	
4	ACC	Turn ignition switch ACC	

COMBINATION METER
PARTS LOCATION

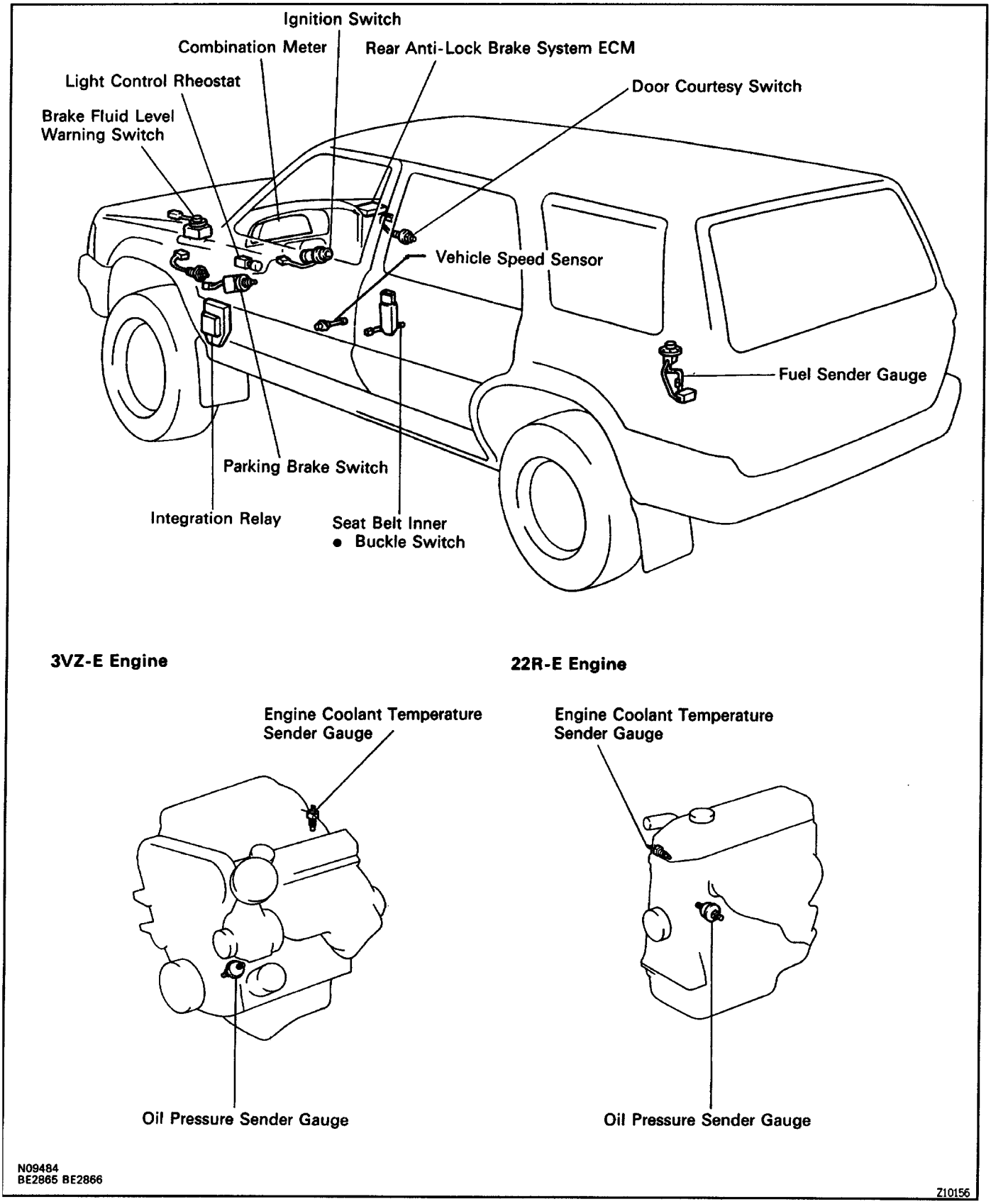

N09484
BE2865 BE2866

Z10156

METER CIRCUIT

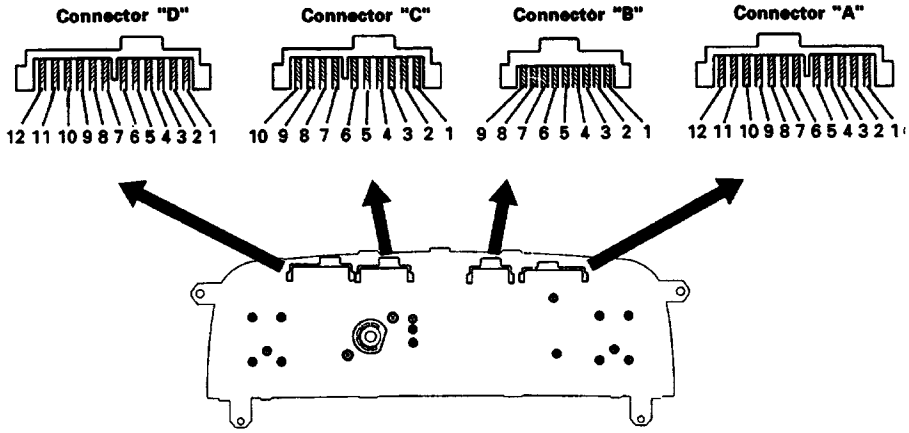

N12236
N12235

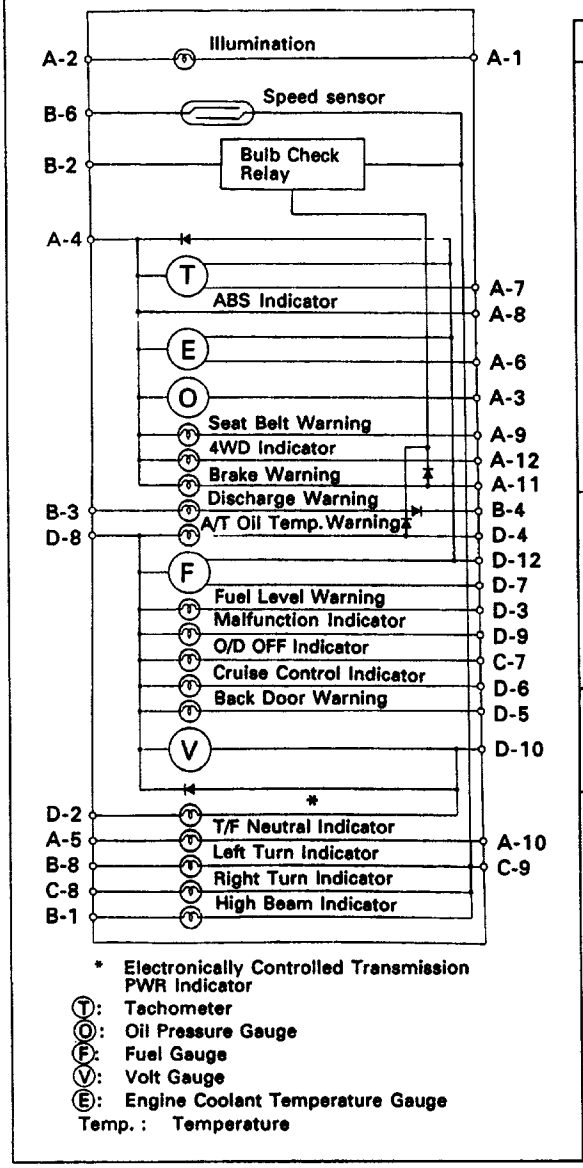

* Electronically Controlled Transmission PWR Indicator
Ⓣ: Tachometer
Ⓞ: Oil Pressure Gauge
Ⓕ: Fuel Gauge
Ⓥ: Volt Gauge
Ⓔ: Engine Coolant Temperature Gauge
Temp. : Temperature

No.		Wiring connector side
A	1	Light Control Rheostat-terminal 3
	2	TAIL Fuse
	3	Oil Pressure Sender Gauge
	4	GAUGE Fuse
	5	Park/Neutral Start Switch
	6	Engine Coolant Temperature Sender Gauge
	7	Igniter
	8	Rear Anti-Lock Brake System ECU or ABS ECU (w/ 4ABS)
	9	Integration Relay-terminal 8
	10	Park/Neutral Start Switch
	11	Brake Fluid Level Warning Switch-terminal 1 and Parking Brake Switch-terminal 1
	12	Transfer Indicator Switch
B	1	Headlight Dimmer Switch-terminal 6/13
	2	STARTER Relay
	3	IGN Fuse
	4	CHARGE Fuse
	6	ECM
	8	Turn Signal Switch
C	7	O/D Main Switch and ECM
	8	Turn Signal Switch
	9	Ground
D	2	Electronically Controlled Transmission Pattern Select Switch
	3	Fuel Sender Gauge-terminal 4
	4	A/T Oil Temperature Switch
	5	Back Door Unlock Warning Switch and Rear Wiper Control Relay
	6	Cruise Control Main Switch
	7	Fuel Sender Gauge-terminal 2
	8	GAUGE Fuse
	9	ECM
	10	Ground
	12	Ground

TROUBLESHOOTING

The table below will be useful for you in troubleshooting these electrical problems. The most likely causes of the malfunction are shown in the order of their probability. Inspect each part in the order shown, and replace the part when it is found to be faulty.

Trouble	Parts name	(See page)
Gauges and Indicator Lights do not operate	1. GAUGE Fuse 2. Wire Harness	(BE–11)
Volt Gauge does not work	1. Volt Gauge 2. Wire Harness	(BE–49)
Tachometer does not operate	1. Tachometer 2. Wire Harness	(BE–49)
Fuel Gauge does not operate	1. Receiver Gauge 2. Sender Gauge 3. Wire Harness	(BE–49) (BE–50)
Engine Coolant Temperature Gauge does not operate	1. Receiver Gauge 2. Wire Harness	(BE–51)
Oil Pressure Gauge does not operate	1. Receiver Gauge 2. Sender Gauge 3. Wire Harness	(BE–51) (BE–52)
Brake Warning Light does not light up	1. Bulb Burned Out 2. Brake Fluid Level Warning Switch 3. Parking Brake Switch 4. Wire Harness	 (BE–53) (BE–53)
Seat Belt Warning Light does not light up	1. Bulb Burned Out 2. Integration Relay 3. Wire Harness	 (BE–55)
Discharge Warning Light does not light	1. IGN Fuse 2. CHARGE Fuse 3. Bulb Burned out 4. Wire Harness	(BE–11) (BE–11)

SPEEDOMETER INSPECTION

INSPECT SPEEDOMETER (ON–VEHICLE)

(a) Using a speedometer tester, inspect the speedometer for allowable indication error and check the operation of the odometer.

HINT: Tire wear and tire over or under inflation will increase the indication error.

If error is excessive, replace the speedometer.

(b) Check the speedometer for pointer vibration and abnormal noise.

USA (mph)		CANADA (km/h)	
Standard indication	Allowable range	Standard indication	Allowable range
20	18 – 24	20	17 – 24
40	38 – 44	40	38 – 46
60	56 – 66	60	57.5 – 67
80	78 – 88	80	77 – 88
100	98 – 110	100	96 – 109
120	118 – 132	120	115 – 130
		140	134 – 151.5
		160	153 – 173

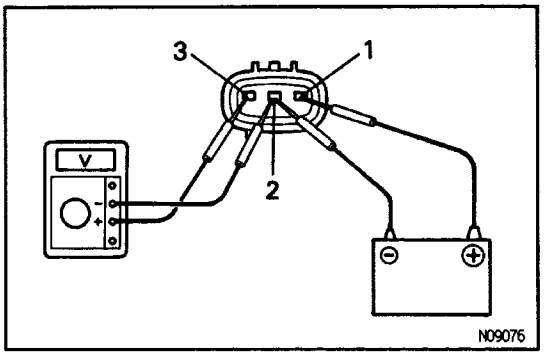

VEHICLE SPEED SENSOR INSPECTION

INSPECT VEHICLE SPEED SENSOR

(a) Connect the positive (+) lead from battery to terminal 1 and negative (–) lead to terminal 2.

(b) Connect the positive (+) lead from tester to terminal 3 and negative (–) lead to terminal 2.

(c) Rotate shaft.

(d) Check that voltage changes from approx. 0 V to 11 V or more between terminals 3 and 2.

HINT: The voltage change should be 4 times for every revolution of the speed sensor shaft.

If operation is not as specified, replace the sensor.

TACHOMETER INSPECTION

INSPECT TACHOMETER (ON–VEHICLE)

(a) Connect a tune–up test tachometer, and start the engine.

NOTICE:

- **Reversing the connection of the tachometer will damage the transistors and diodes inside.**
- **When removing or installing the tachometer, be careful not to drop or subject it to heavy shocks.**

(b) Compare the tester and tachometer indications.

RPM (DC 13.5 V, 20˚C (68˚F))

Standard indication (RPM)	Allowable range (RPM)
700	630 – 770
3,000	2,850 – 3,150
5,000	4,850 – 5,150
7,000	6,790 – 7,210

If error is excessive, replace the tachometer.

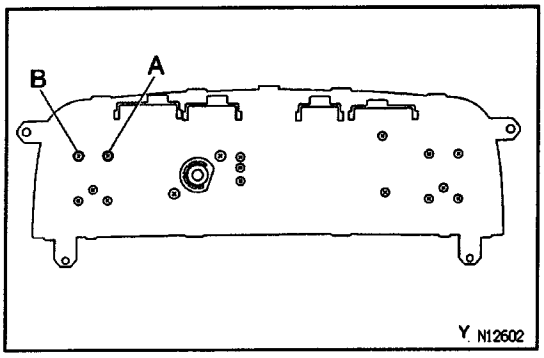

VOLT GAUGE INSPECTION

INSPECT VOLT GAUGE

Measure the resistance between terminals A and B.

Resistance:

Approx. 347Ω

If resistance value is not as specified, replace the gauge.

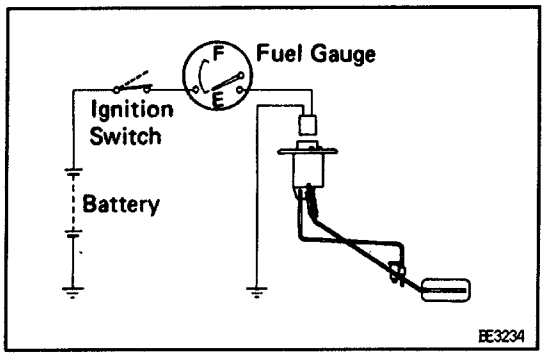

FUEL GAUGE INSPECTION

1. INSPECT FUEL RECEIVER GAUGE OPERATION

(a) Disconnect the connector from the sender gauge.

(b) Turn the ignition switch ON, check that the receiver gauge needle indicates EMPTY.

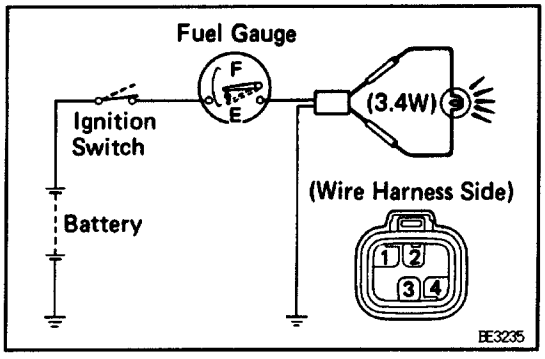

(c) Connect terminals 2 and 4 on the wire harness side connector through a 3.4 W test bulb.

(d) Turn the ignition switch ON, check that the bulb lights up and the receiver gauge needle moves towards the full side.

HINT: Because of the silicon oil in the gauge, it will take a short time for the needle to stabilize.

If operation is not as specified, inspect the receiver gauge resistance.

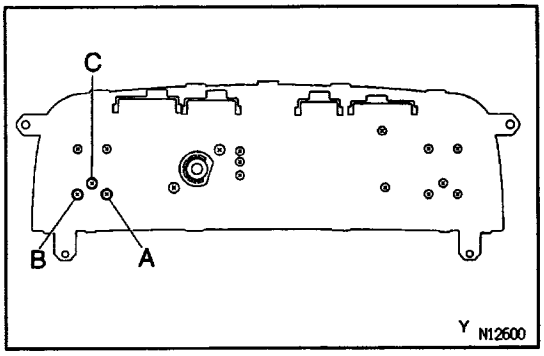

2. INSPECT FUEL RECEIVER GAUGE RESISTANCE

Measure the resistance between terminals.

Between terminals	Resistance (Ω)
A – B	Approx. 123
A – C	Approx. 260
B – C	Approx. 137

If resistance value is not as specified, replace the receiver gauge.

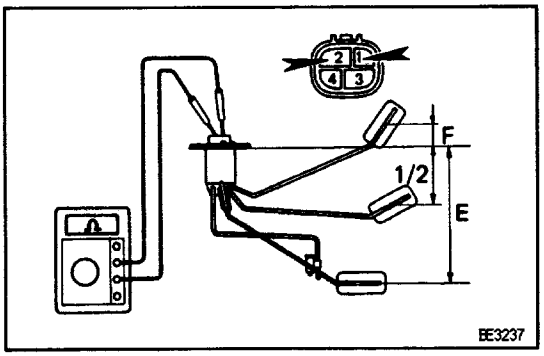

3. INSPECT FUEL SENDER GAUGE RESISTANCE

Measure the resistance between terminals 1 and 2.

Float position (mm)	Resistance (Ω)
F : Approx. 25 (0.98)	F : Approx. 3
1/2 : Approx. 76 (2.99)	1/2 : Approx. 32.5
E : Approx. 176 (6.12)	E : Approx. 110

If resistance value is not as specified, replace the sender gauge.

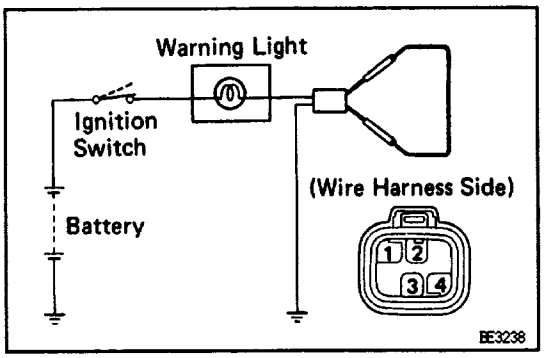

FUEL LEVEL WARNING INSPECTION

1. INSPECT FUEL LEVEL WARNING LIGHT

(a) Disconnect the connector from the sender gauge.

(b) Connect terminals 1 and 3 on the wire harness side connector.

(c) Turn the ignition switch ON, check that the warning light lights up.

If the warning light does not light up, test the bulb.

2. INSPECT FUEL LEVEL WARNING SWITCH

(a) Apply battery positive voltage between terminals 1 and 3 through a 3.4 W test bulb, check that the bulb lights up.

HINT: It will take a short time for the bulb to light up.

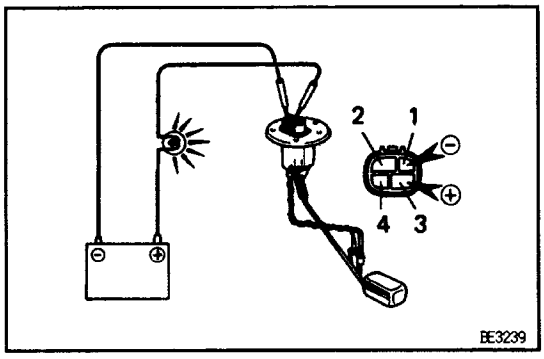

(b) Submerge the switch in fuel, check that the bulb goes out.

If operation is not as specified, replace the sender gauge.

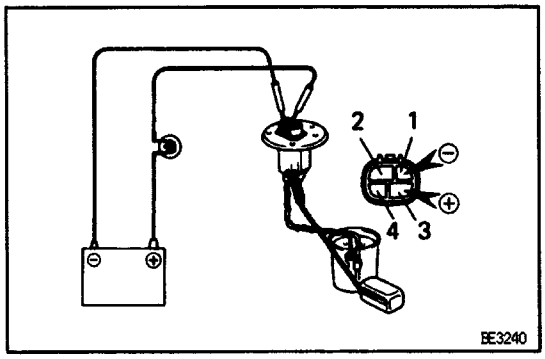

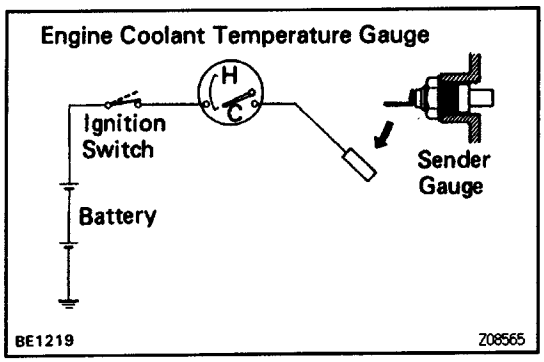

ENGINE COOLANT TEMPERATURE RECEIVER GAUGE INSPECTION

1. INSPECT ENGINE COOLANT TEMPERATURE RECEIVER GAUGE OPERATION

(a) Disconnect the connector from the sender gauge.

(b) Turn the ignition switch ON, check that the receiver gauge needle indicates COOL.

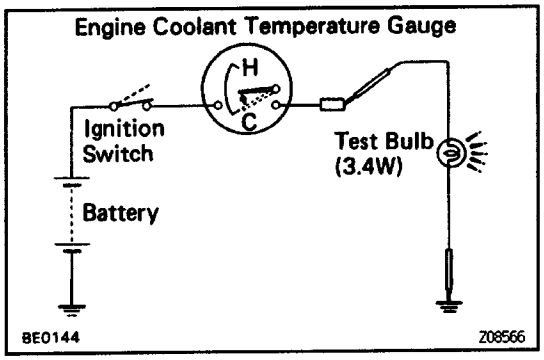

(c) Ground terminal on the wire harness side connector through a 3.4 W test bulb.

(d) Turn the ignition switch ON, check that the bulb lights up and the receiver gauge needle moves towards the hot side.

If operation is as specified, replace the sender gauge. Then, recheck the system.

If operation is not as specified, measure the receiver gauge resistance.

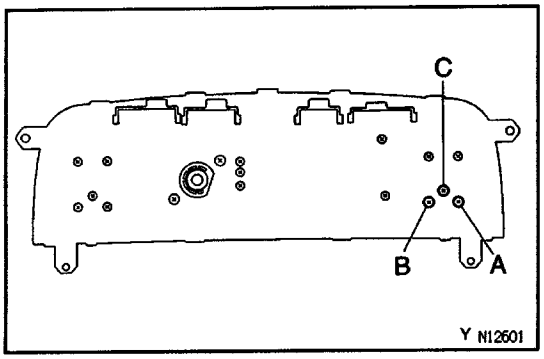

2. INSPECT ENGINE COOLANT TEMPERATURE RECEIVER GAUGE RESISTANCE

Measure the–resistance between terminals.

HINT: Connect the test leads so that the current from the ohmmeter can flow according to the above order.

Between terminals	Resistance (Ω)
A – B	Approx. 57
A – C	Approx. 135
B – C	Approx. 217

If resistance value is not as specified, replace the receiver gauge.

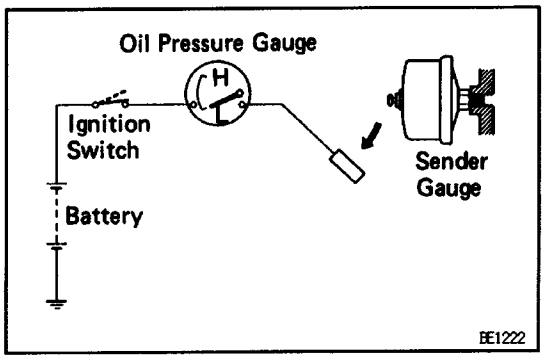

OIL PRESSURE RECEIVER GAUGE INSPECTION

1. INSPECT OIL PRESSURE RECEIVER GAUGE OPERATION

(a) Disconnect the connector from the sender gauge.

(b) Turn the ignition switch ON, check that the receiver gauge needle indicates LOW.

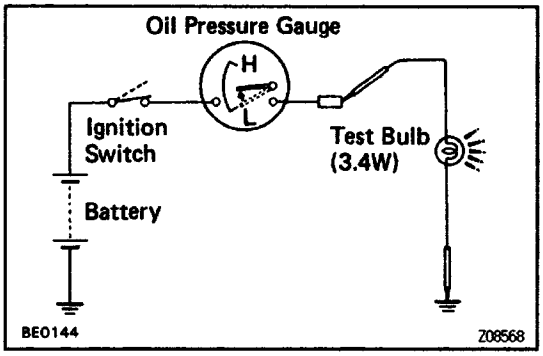

(c) Ground terminal on the wire harness side connector through a 3.4W test bulb.
(d) Turn the ignition switch ON, check that the bulb lights up and the receiver gauge needle moves to the high side.
If operation is not as specified, measure the receiver gauge.

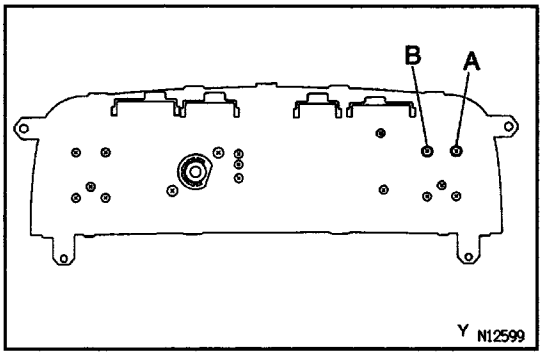

2. INSPECT OIL PRESSURE RECEIVER GAUGE RESISTANCE

Measure the resistance between terminals A and B.

Resistance:

Approx. 25 Ω

If resistance value is not as specified, replace the receiver gauge.

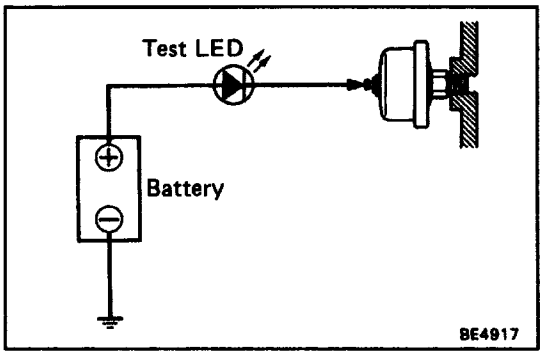

3. INSPECT OIL PRESSURE SENDER GAUGE

(a) Disconnect the connector from the sender gauge.
(b) Apply battery positive voltage to the sender gauge terminal through a test LED.
(c) Check that the bulb does not light when the engine is stopped.
(d) Check that the LED flashes when the engine is running.
The number of flashes should vary with the engine speed.
If operation is not as specified, replace the sender gauge.

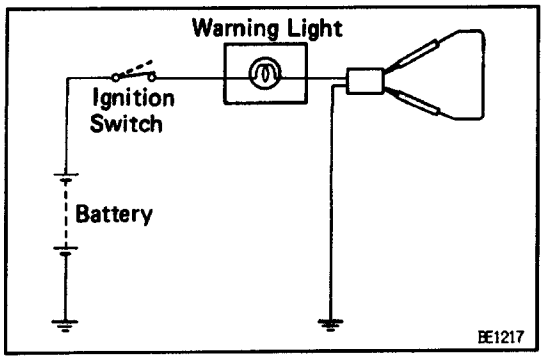

BRAKE WARNING INSPECTION

1. INSPECT BRAKE FLUID LEVEL WARNING LIGHT

(a) Disconnect the connectors from the level warning switch and parking brake switch.

(b) Connect terminals on the wire harness side connector of the level warning switch connector.

(c) Remove the CHARGE fuse and turn the ignition switch ON, check that the warning light comes on.

If the warning light does not light up, test the bulb.

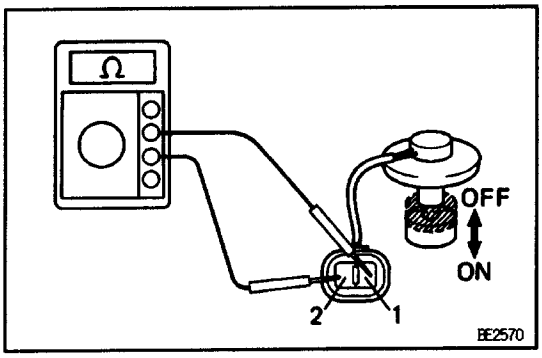

2. INSPECT BRAKE FLUID LEVEL WARNING SWITCH

(a) Check that there is no continuity between terminals with the switch OFF (float up).

(b) Check that there is continuity between terminals with the switch ON (float down).

If operation is not as specified, replace the switch.

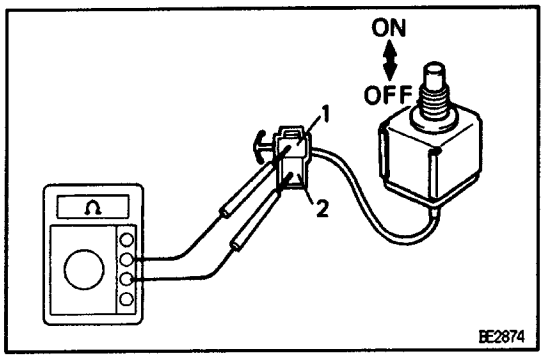

PARKING BRAKE SWITCH INSPECTION

INSPECT PARKING BRAKE SWITCH

(a) Check that there is continuity between terminals with the switch ON (switch pin released).

(b) Check that there is no continuity between terminals with the switch OFF (switch pin pushed in).

If operation is not as specified, replace the switch.

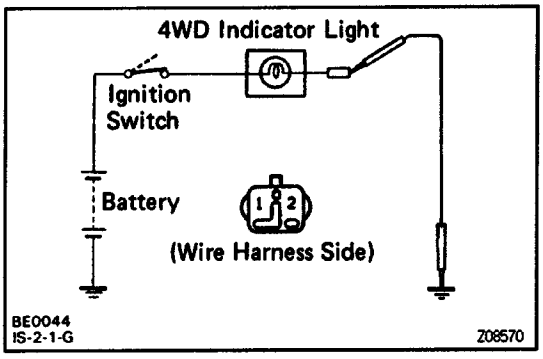

4WD INDICATOR INSPECTION

1. INSPECT 4WD INDICATOR LIGHT

(a) Disconnect the connector from the 4WD indicator switch. Connect the switch terminal 2 and body ground.

(b) Turn the ignition switch ON. Check that the bulb lights up.

If operation is not as specified, remove and test the bulb.

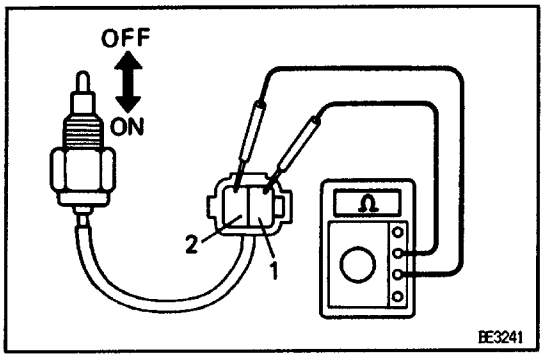

2. INSPECT 4WD INDICATOR SWITCH OPERATION

(a) Check the continuity between terminals.

(b) Check the there is continuity when the switch pin is pushed.

(c) Check that there is no continuity when the switch is free.

If operation is not as specified, replace the switch.

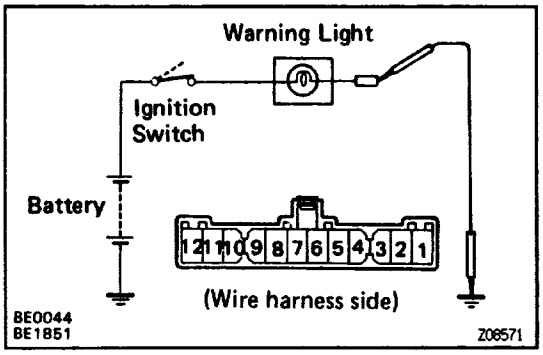

SEAT BELT WARNING LIGHT INSPECTION

INSPECT SEAT BELT WARNING LIGHT

(a) Disconnect the wire harness side connector from the integration relay.

(b) Ground terminal 8 on the wire harness side connector.

(c) Turn the ignition switch ON, check that the warning light lights up.
If the warning light does not light up, test the bulb.

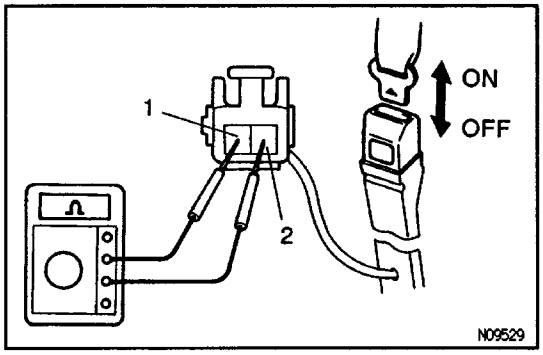

BUCKLE SWITCH INSPECTION

INSPECT BUCKLE SWITCH

(a) Check that there is continuity between terminals with the switch ON (belt unfastened).

(b) Check that there is no continuity between terminals with the switch OFF (belt fastened).
If operation is not as specified, replace the seat belt inner assembly.

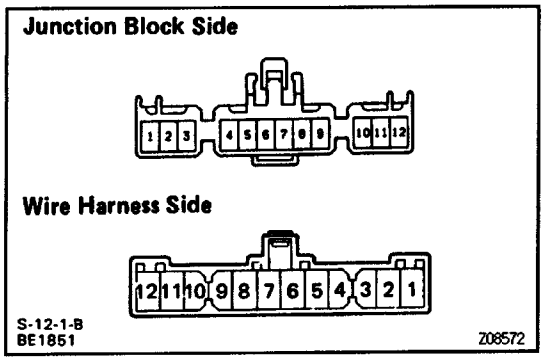

INTEGRATION RELAY INSPECTION

INSPECT INTEGRATION RELAY CIRCUIT

Remove the integration relay and inspect the connectors on the wire harness side and the junction block side, as shown in the chart.

Wire Harness Side

Tester connection to terminal number	Condition	Specified condition
2 – 3	Key unlock –warning switch position OFF (Ignition key removed)	No continuity
2 – 3	Key unlock warning switch position ON (Ignition key set)	Continuity
6 – Ground	Buckle switch position OFF (Belt fastened)	No continuity
6 – Ground	Buckle switch position ON (Belt unfastened)	Continuity
8 – 9	Constant	* Continuity
10 – Ground	Drivers door courtesy switch position OFF (Door closed)	No continuity
10 – Ground	Driver's door courtesy switch position ON (Door opened)	Continuity
12 – Ground	Passenger's door courtesy switch position OFF (Door closed)	No continuity
12 – Ground	Passenger's door courtesy switch position ON (Door opened)	Continuity

* There is resistance because this circuit includes the bulb.

Junction Block Side

Tester connection to terminal number	Condition	Specified condition
7 – Ground	Constant	Continuity
3 – Ground	Constant	Battery positive voltage
9 – Ground	Ignition switch position LOCK or ACC	No voltage
9 – Ground	Ignition switch position ON	Battery positive voltage

If circuit is not as specified, replace the relay.

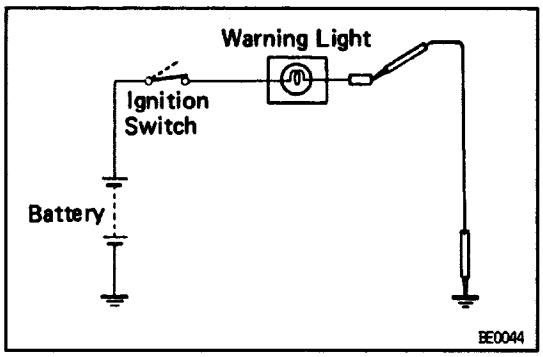

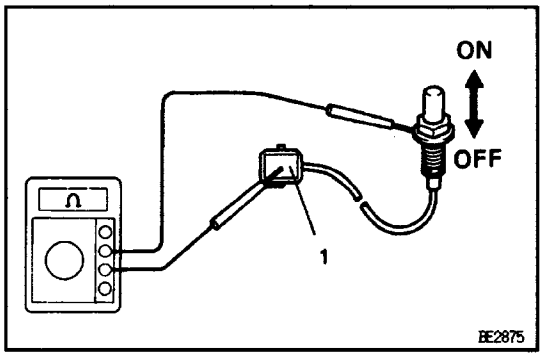

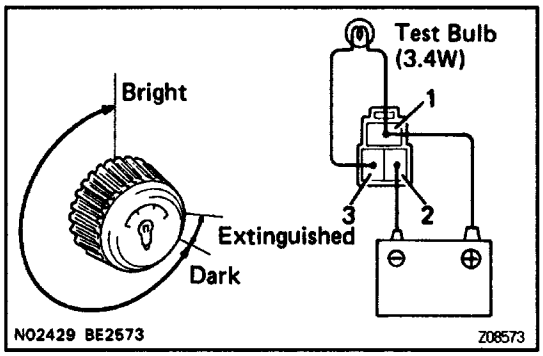

OPEN DOOR WARNING LIGHT INSPECTION

INSPECT OPEN DOOR WARNING LIGHT

(a) Disconnect the connector from the door courtesy switch and ground terminal on the wire harness side connector.

(b) Turn the ignition switch ON, check that the warning light lights up.

If the warning light does not light up, test the bulb.

DOOR COURTESY SWITCH INSPECTION

INSPECT DOOR COURTESY SWITCH

(a) Check that there is continuity between terminal and the switch body with the Switch ON (switch pin released).

(b) Check that there is no continuity between terminal and the switch body with the Switch OFF (switch pin pushed in).

If operation is not as specified, replace the switch.

LIGHT CONTROL RHEOSTAT INSPECTION

INSPECT LIGHT CONTROL RHEOSTAT

(a) Connect terminals 1 and 3 through a 3.4W test bulb.

(b) Connect the positive (+) lead from the battery to terminal 1 and the negative (–) lead to terminal 2.

(c) Turn the rheostat knob to fully counterclockwise, check that the test bulb goes out.

(d) Gradually turn the rheostat knob to clockwise, check that the test bulb brightness changes from dark to bright.

If operation is not as specified, replace the rheostat.

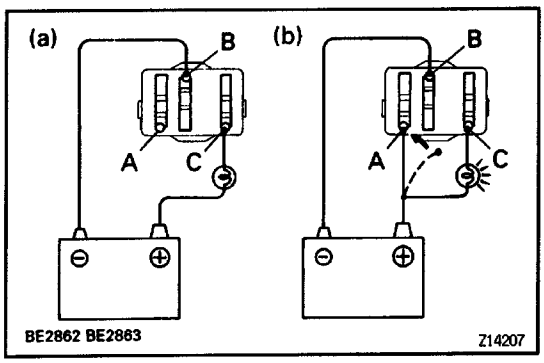

BULB CHECK RELAY INSPECTION

INSPECT BULB CHECK RELAY

(a) Connect the positive (+) lead from the battery to terminal C through a 1.4 W test bulb and the negative (–) lead to terminal B, check that the test bulb does not light up.

(b) Connect the positive (+) lead from the battery to terminal A, check that the test bulb light up.

If operation is not as specified, replace the relay.

CRUISE CONTROL SYSTEM

PARTS LOCATION

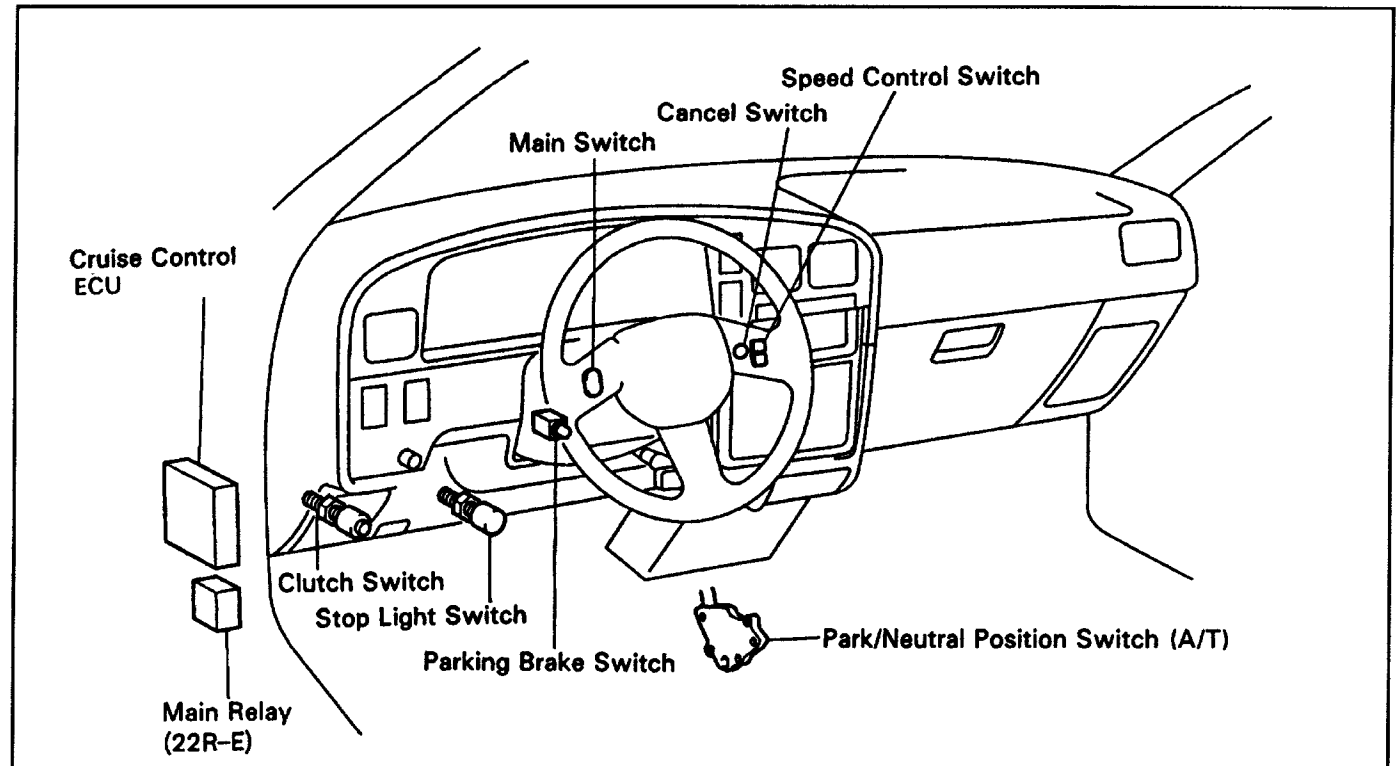

3VZ-E ENGINE

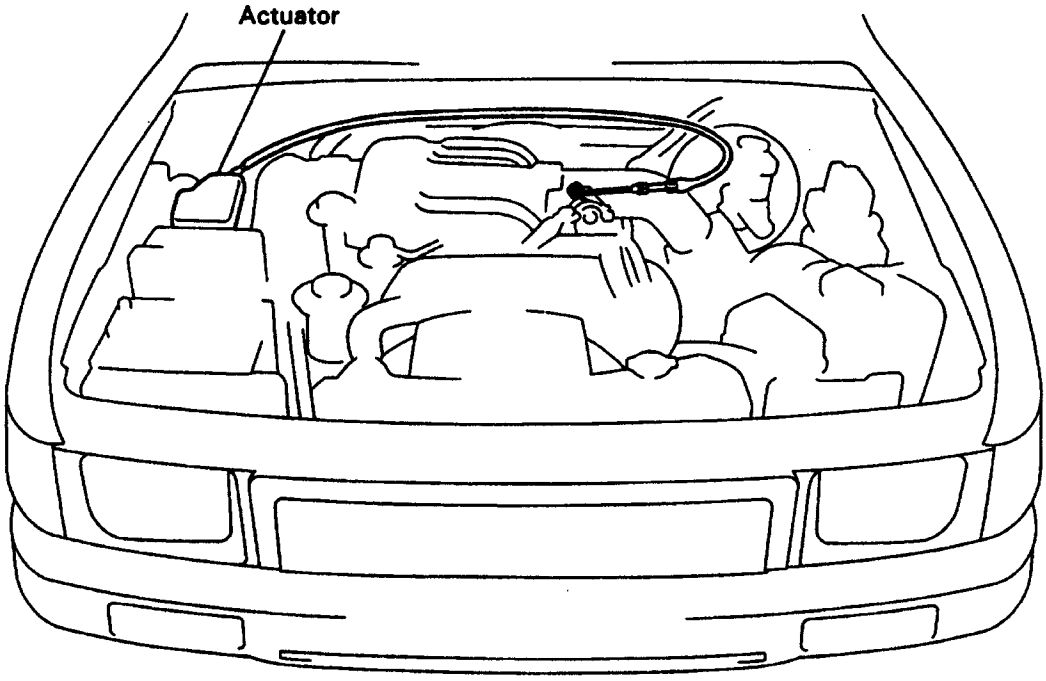

N09538
N09062

Z14381

22R-E ENGINE

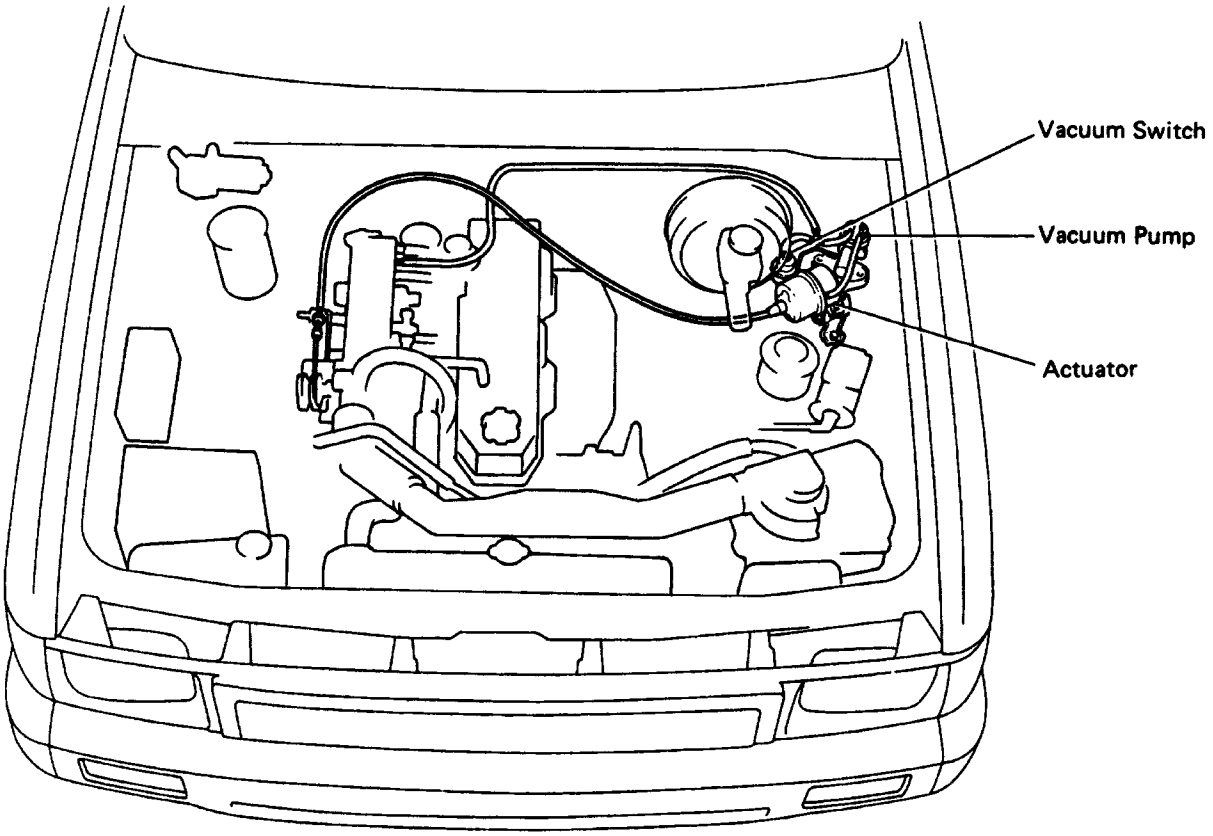

DIAGNOSIS SYSTEM

OUTPUT OF DIAGNOSTIC CODE READ DIAGNOSTIC CODE

Type A

(a) Turn the ignition switch on.
(b) Push the SET/ COAST switch on, and keep it on.
(c) Push the main switch on.
(d) Check that the indicator light "CRUISE" light–on in the combination meter and after 3 seconds check that the indicator light "CRUISE" blinks.
(e) Turn the SET/ COAST switch off.
(f) Meet the conditions listed below.
(g) Read the diagnostic trouble code on the indicator light "CRUISE".

No.	Conditions	Indication code	Diagnosis
1	Push the cruise control switch SET/COAST on.	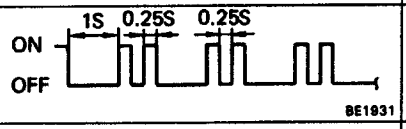	SET/COAST circuit is normal.
2	Push the cruise control switch RESUME/ACCEL on.	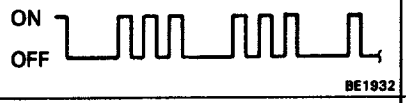	RESUME/ACCEL circuit is normal.
3	Vacuum switch is turned ON. (22R–E)		Vacuum switch circuit is normal.
4	Each cancel switch turned ON. • Cruise control switch(to CANCEL) • Stop light switch • Park/Neutral position switch (to N or P range) • Clutch switch • Parking brake switch	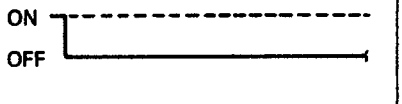	Each cancel switch is normal.
5	Drive approx. 40 km/h (25 mph) or over.		Speed sensor circuit is normal.
6	Drive approx. 40 km/h (25 mph) or below.	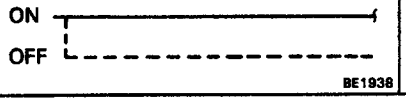	Speed sensor circuit is normal.

HINT:

- Indication codes appear in order from No. 1.
- If there is no indication code, perform diagnosis and inspection. (See page BE–98)
- Indication is stopped, when the MAIN switch is pushed again.

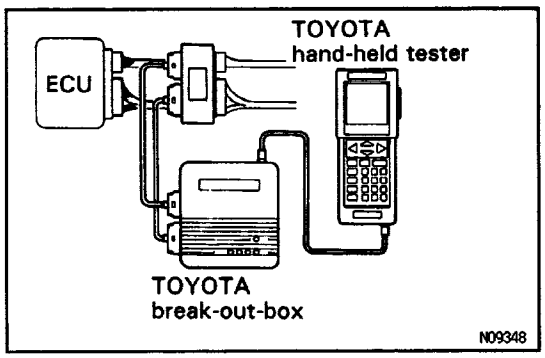

ECM TERMINAL VALUES MEASUREMENT USING TOYOTA BREAK–OUT–BOX AND TOYOTA HAND–HELD TESTER

1. Hook up the TOYOTA break–out–box and TOYOTA hand–held tester to the vehicle.
2. Read the ECM input/output values by following the prompts on the hand–held tester screen.
   HINT: TOYOTA hand–held tester has a ”Snapshot” function. This records the measured values and is effective in the diagnosis of intermittent problems.

   Please refer to the TOYOTA hand – held tester / TOYOTA break–out–box operator’s manual for further details.

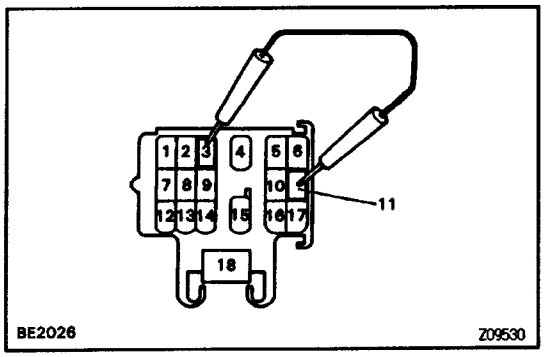

Type B

(a) If while driving with the cruise control on, the system is canceled by a malfunction in either the actuator, speed sensor or cruise control switch circuit the cruise control indicator light "CRUISE" will blink 5 times.

(b) While stopping, connect terminals 3 and 11 of the DLC 1.
HINT: Should the ignition switch be turned off, the diagnostic trouble code will be erased from the ECU memory.

(c) Read the diagnostic trouble code on the indicator light "CRUISE".

3VZ – E Engine:

DTC	CRUISE MAIN Indicator Light Blinking Pattern	Diagnosis
–	ON / OFF  BE3931	Normal
11	ON / OFF  BE3931	• Overcurrent (short) in motor circuit.
12	ON / OFF  BE3931	• Overcurrent (short) in magnet clutch circuit. • Open in magnet clutch circuit.
13	ON / OFF  BE3931	• Position sensor detects abnormal voltage.
14	ON / OFF  BE3931	• Open in actuator motor circuit. • Position sensor signal value does not change when the motor operates.
21	ON / OFF  BE3932	• Speed signal is not input to the ECU while cruise control is set.
23*	ON / OFF  BE3932	• Actual vehicle speed has dropped by 16 km/h (10 mph) or more below the set speed. • Vehicle Speed Sensor Pulse is abnormal.
32	ON / OFF  BE3933	Short in control switch circuit.
34	ON / OFF  BE3933	• Voltage abnormality in control switch.
41	ON / OFF  BE3934	• Duty ratio of 100% output to motor acceleration side.
42	ON / OFF  BE3934	• Source voltage drop.

HINT: When 2 or more codes are indicated, the lowest numbered code will be displayed first.

*: If the set speed can be maintained when the speed control switch is again set at SET/COAST, there is no malfunction.

22R – E Engine:

Indication code	Diagnosis
	Normal.
11 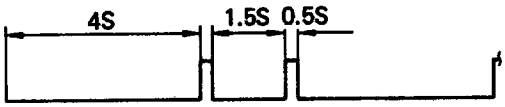	Control valve circuit of actuator is abnormal.
12 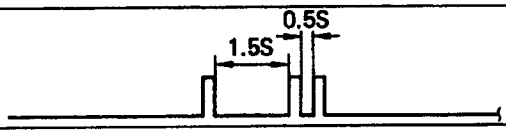	Release valve circuit of actuator is abnormal.
21 	Speed sensor circuit is abnormal.
23 	*Vehicle speed has decreased by 16 km/h (10 mph) or more from the set speed.
32 	SET/COAST switch signal and RESUME/ACCEL switch signal stay on simultaneously.
34 	Control switch does not turn off before switching.
* If the set speed can be maintained when the speed control switch is again set at SET/COAST, there is no malfunction.	

When 41 code is indicated, replace the cruise control ECU.

41 	

HINT:

- Indication codes appear in order from No.11.
- If there is no indication code, perform diagnosis and inspection. (See page BE–98)

TROUBLESHOOTING

Use the table below to help you find the cause of the problem. The numbers indicate the priority of the likely cause of the problem. Check each part in order. If necessary, replace these parts.

( ): 22R–E Engine Only

Chart No.				C	A	B	E	G,H	F	I	I	D		K			J	
Inspection Item / Diagnosis Trouble Code / Problem	Type B	Type A		Cruise Control ECU	Actuator	Main Switch (in Control Switch)	Control Switch	Stop Light Switch	Clutch Switch or Park / Neutral Position Switch	Parking Brake Switch	(¿¿cuum Switch)	(¿¿cuum Pump)	Whicle Speed Sensor*1 or Speedometer Cable	Speed Control Cable Function	Throttle Position Sensor (IDL)	Wire Harness	Indicator Light	No.2 Solenoid	(Others)
• "CRUISE" Indicator light blinks. • Cruise control system goes not set. • Cruise control system does not operate.	11	–		3	2											1			
	12	–		4	2			3								1			
	13*2	–		3	2											1			
	14*2	–		3	2											1			
	21	–		3									2			1			
	23	–		4 (7)	(3)						6	5	2 (4)	3 (2)		1			*3
	32	–		3			2									1			
	34	–		3			2									1			
	41	–		3	2														
	42*2	–		Source voltage drop															
	(Normal)	5	OK	8	7	1	2	3	4	5				6					*4
			NG	2									1						
Indicator light does not light up.				3												1	2		
Large speed drop when the cruise control switch pushed to SET.				4	3									1	2				
Vehicle speed fluctuates when cruise control switch pushed to SET.				4	3								(1)	1 (2)	2				
Set speed deviates on high or low side.				4	3						6	5	1	2					
Acceleration response is sluggish when cruise control switch turned to "ACCEL" or RESUME"				5	4		3					6	2	1					*3
Cruise control system does not set. Cruise control system does not operate.	4		OK	9	8	2	3	4	5	6				7		1			
			NG	2									1						
Set speed does not cancel when parking brake pedal depressed.	3 (4)		OK	1 (3)	(1)			(2)											
			NG	2				1											
Set speed does not cancel when parking brake lever pulled.	3 (4)		OK	1 (2)	(1)														
			NG	2						1									
Cruise control not cancelled, even when transmission is shifted to except D position	3 (4)		OK	1 (2)	(1)														
			NG	2					1										
Set speed does not cancel when shifted to N position (A/T).	3 (4)		OK	1 (2)	(1)					1									
			NG	2					1										
Set speed does notcancel when clutch pedal depressed	3 (4)		OK	1 (2)	(1)					1									
			NG	2					1										
Set speed does not cancel when cruise control switch pushed to CANCEL	3 (4)		OK	1 (2)	(1)														
			NG	2			1												
Vehicle speed does not decrease when cruise control switch pushed to COAST.	1		OK	4 (3)	1								3	2					
			NG	2			1												
Vehicle speed does not accelerate when cruise control switch pushed to ACCEL.	2		OK	4 (3)	1								3	2					
			NG	2			1												
Vehicle speed does not return to memorized cruise when control switch pushed to RESUME	2		OK	4 (3)	1								3	2					
			NG	2			1												
Speed can be set below about 40 km/h (25 mph.)	4 (5)		OK	1 (2)	(1)														
			NG	2									1						
Cruise control does not disengage even at about 40 km/h (26 mph) or less.	4 (5)		OK	2	1														
			NG	2 (3)									1	(2)					

*1: In the Speedometer *2: 3VZ–E Engine Only *3: Vacuum Hose *4: Vacuum Hose & Brake Fluid

A INSPECTION OF POWER SOURCE CIRCUIT

Turn ignition switch on.

Is ENGINE fuse normal?

No → Replace fuse. Is operation normal?

No →
- Short circuit in wire harness between ENGINE fuse and terminal 2 of main relay.
- Inspect main relay. (See page BE–119)

Yes

Yes → Fuse faulty.

MAIN RELAY (22 R–E)

INSPECT GROUND CONNECTION
Disconnect connector from main relay.
Is there continuity between terminal 3 of main relay and ground?

No →
- Open circuit in wire harness between terminal 3 of main relay and ground.
- Ground faulty.

Yes

INSPECT POWER SOURCE
Is there battery positive voltage between terminal 2 of main relay and ground with ignition switch turned on?

No → Open circuit in wire harness between ENGINE fuse and terminal 2 of main relay.

Yes

INSPECT MAIN RELAY OPERATION
Is main relay operation normal?
(See page **BE–119**)

No → Main relay faulty.
Replace main relay. Then recheck system.

Yes

Is there continuity between terminal 6 on wire harness side connector and ground?

Yes → Short circuit in wire harness between terminals 6 of main relay and 12 of CC ECU.

No

Is there continuity between terminal 1 on wire harness side connector and ground?

Yes → Short circuit in wire harness between terminals 1 of main relay and 10 of CC ECU.

No

CONTINUED ON NEXT PAGE

CONTINUED FROM PREVIOUS PAGE

Disconnect combination switch connector.

Is there continuity between terminal 4 of main relay connector on wire harness side and ground?

Yes → Short circuit in wire harness between terminals 4 of main relay and 4I6 of slip ring.

No

Connect connector to main relay.

SLIP RING

Disconnect connectors from slip ring.

INSPECT POWER SOURCE
Is there battery positive voltage between terminal 4/6 on wire harness side connector and ground with ignition switch turned on?

No → Open circuit in wire harness between terminals 4 of wire harness side connector and 4/6 of slip ring.

Yes

INSPECT GROUND CONNECTION
Is there continuity between terminal 5I6 on . wire harness side connector and ground?

No → Open circuit in wire harness side between terminal 5/6 of slip ring and ground.

Yes

INSPECT SLIP RING CONTINUITY
Is slip ring continuity normal?
(See page BE–119)

No → Slip ring faulty.
Replace slip ring. Then recheck system.

Yes

MAIN SWITCH

Disconnect connector from main switch.

Is there continuity between terminals 1/2 and 3I5 of speed control switch?

No → Open circuit in speed control switch between terminals 1/2 and 3I5.

Yes

INSPECT MAIN SWITCH CONTINUITY
Is main switch continuity normal?
(See page BE–117)

No → Main switch faulty.
Replace main switch. Then recheck system.

Yes

CONTINUED ON NEXT PAGE

CONTINUED FROM PREVIOUS PAGE

Is there continuity between terminals 2/2 and 4/5 of cruise control switch?

No → Open circuit in cruise control switch between terminals 2/2 and 4/5.

Yes

Connect connectors to slip ring.

INSPECT POWER SOURCE
Is there battery positive voltage between terminal 1/2 of cruise control switch and ground with ignition switch turned on?

No → Short circuit in wire harness between terminals 1/2 and 3/5 of cruise control switch.

Yes

Connect connector to main switch.

→ ※

ECU (22R–E)

Disconnect connector from CC ECU and inspect connector on wire harness side as follows.

INSPECT GROUND CONNECTION
Is there continuity between terminal 15 and ground?

No →
- Open circuit in wire harness between terminal 15 and ground.
- Ground faulty.

Yes

INSPECT POWER SOURCE
Is there battery positive voltage between terminal 12 and ground with ignition switch and main switch is turned on?

No → Open circuit in wire harness between terminals 12 of CC ECU and 1 of main relay.

Yes

Disconnect connector from main relay.

Is there continuity between terminals 10 of CC ECU and 1 of main relay wire harness side connector?

No → Open circuit in wire harness between terminals 10 of CC ECU and 1 of main relay.

Yes

CONTINUED ON NEXT PAGE

CONTINUED ON PREVIOUS PAGE

INSPECT INDICATOR LIGHT CIRCUIT
Is GAUGE fuse normal?

No

Replace fuse.
Is operation normal?

No → Short circuit in wire harness between GAUGE fuse and terminal 4 of CC ECU.

Yes

Fuse faulty.

Yes

Connect terminal 4 to ground.
Does indicator light lights on with ignition switch turned on?

No →
- Open circuit in wire harness between GAUGE fuse and terminal 4 of CC ECU.
- Inspect indicator light.

Yea

CC ECU faulty.
Replace CC ECU. Then recheck system.

CC ECU (3VZ–E)

Disconnect connector from CC ECU and inspect connector on wire harness side as follows.

INSPECT GROUND CONNECTION
Is there continuity between terminal 13 and ground?

No →
- Open circuit in wire harness between terminal 13 of CC ECU and ground.
- Ground faulty.

Yes

INSPECT POWER SOURCE
Turn ignition switch ON.
Is there battery positive voltage between terminal 14 and ground?

No → Open circuit in wire harness between terminal 14 of CC ECU and ground.

Yes

Replace CC ECU. Then recheck system.

CC: Cruise Control

B INSPECTION OF SPEED CONTROL SWITCH CIRCUIT

Turn ignition switch off.

CRUISE CONTROL SWITCH

Disconnect connector from control switch.

INSPECT CONTROL SWITCH
Is control switch operation normal?
(See page **BE–117**)

No → Cruise control switch faulty.
Replace cruise control switch. Then recheck system.

Yes

SLIP RING

Disconnect connector from slip ring.

INSPECT GROUND CONNECTION
Is there continuity between terminal 5/6 on wire harness side connector and ground?

No →
- Open circuit in wire harness between terminal 5/6 of slip ring and ground.
- Ground faulty.

Yes

INSPECT SLIP RING CONTINUITY
Is slip ring continuity normal?
(See page BE–119)

No → Slip ring faulty.
Replace slip ring. Then recheck system.

Yes

ECU

Connect connectors to slip ring.
Disconnect connector from CC ECU and inspect connector on wire harness side as follows.

INSPECT GROUND CONNECTION
Is there continuity between terminal 15 (13) and ground?

No →
- Open circuit in wire harness between terminal 15 (13) of CC ECU and ground.
- Ground faulty.

Yes

INSPECT SPEED CONTROL SWITCH CIRCUIT
Is there no continuity between terminals 19 (18) and 15 (13) with control switch is off?

No → Short circuit in wire harness between terminal 19 (18) of CC ECU and terminal 6/6 of slip ring.

Yes

Is there approx. 68Ω between terminals 19 (18) and 15 (13) with control switch RESUME/ACCEL is pushed on?

No → Open circuit in wire harness between terminal 19 (18) of CC ECU and terminal 6/6 of slip ring.

Yes

CC ECU faulty.
Replace CC ECU. Then recheck system.

( ): 3VZ–E

C ACTUATOR CIRCUIT

HINT: While carrying out the following inspection, make certain that the connectors and terminals are properly connected.

Turn ignition switch off.

VACUUM HOSE (22R–E)

Are there cracks or other damage on the vacuum hose?

Yes → Vacuum hose faulty.
Replace vacuum hose. Then recheck system.

No

ACTUATOR

Disconnect connector from actuator and inspect connector on wire harness side as follows.

INSPECT GROUND CONNECTION
Is there continuity between terminal 3 (4) and ground ?

No →
- Open circuit in wire harness between terminal 3 (4) of actuator and terminal 16 (26) CC ECU.
- Ground faulty.

Yes

INSPECT ACTUATOR (See page BE–120)
Is actuator operation normal?

No → Replace actuator. Then recheck system.

Yes

STOP LIGHT SWITCH

INSPECT STOP LIGHT SWITCH INSTALLATION
Is stop tight switch installed properly?

No → Reinstall stop light switch properly. Then recheck system.

Yes

Connect connector to actuator.
Disconnect connector from stop light switch and inspect connector on wire harness side as follows.

INSPECT MAGNET CLUTCH CIRCUIT
Is there approx. 71Ω (38.5Ω) between terminal 4 and ground?

No → Open or short circuit in wire harness between terminals 4 of stop light and 1 (5) of actuator.

Yes

INSPECT STOP LIGHT SWITCH (See page BE–118)
Is stop light switch operation normal?

No → Replace stop tight switch. Then recheck system.

Yes

CONTINUED ON NEXT PAGE

CC: Cruise Control
( ): 3VZ–E

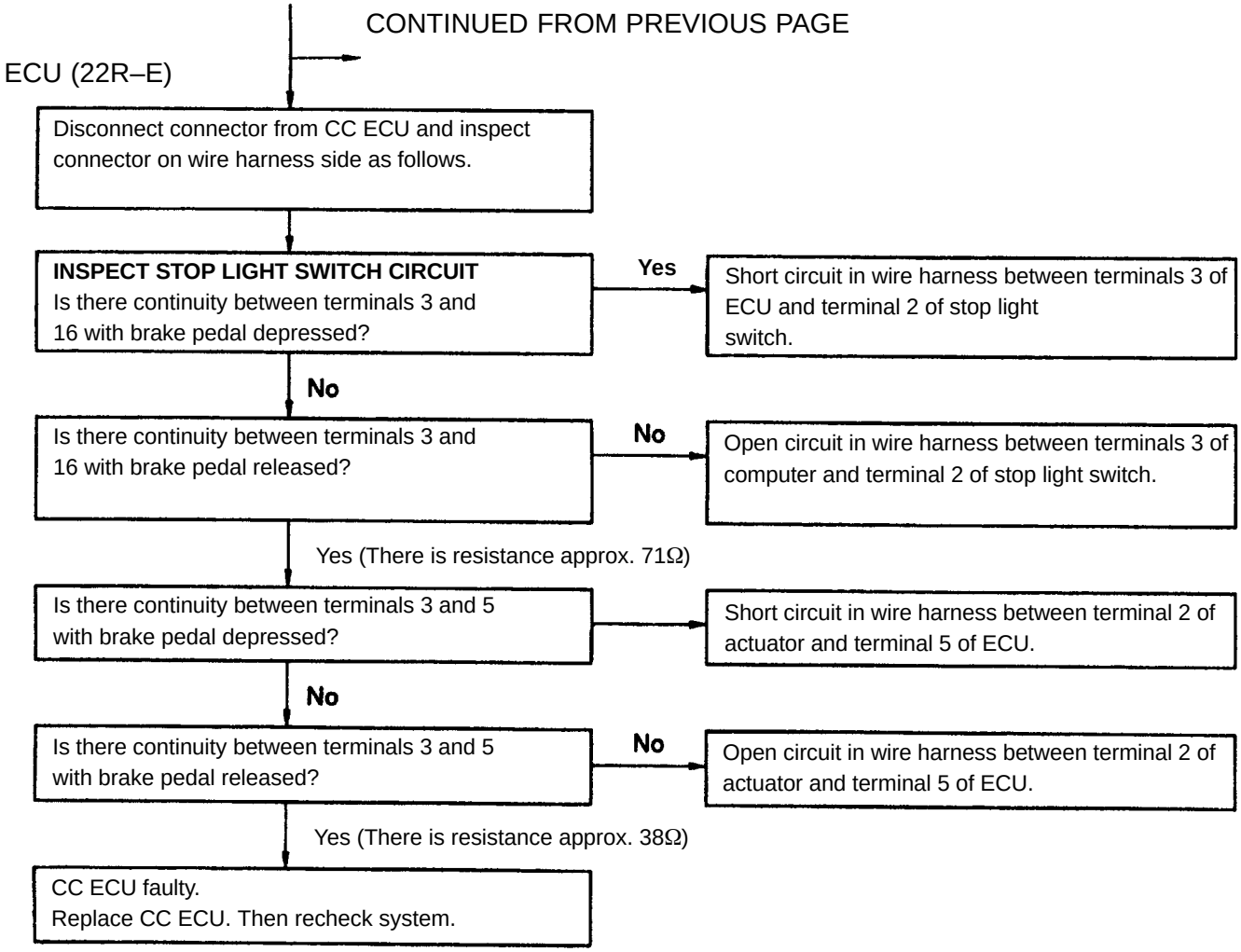
CONTINUED FROM PREVIOUS PAGE
ECU (22R–E)
Disconnect connector from CC ECU and inspect connector on wire harness side as follows.
INSPECT STOP LIGHT SWITCH CIRCUIT
Is there continuity between terminals 3 and 16 with brake pedal depressed?
Yes
Short circuit in wire harness between terminals 3 of ECU and terminal 2 of stop light switch.
No
Is there continuity between terminals 3 and 16 with brake pedal released?
No
Open circuit in wire harness between terminals 3 of computer and terminal 2 of stop light switch.
Yes (There is resistance approx. 71Ω)
Is there continuity between terminals 3 and 5 with brake pedal depressed?
Short circuit in wire harness between terminal 2 of actuator and terminal 5 of ECU.
No
Is there continuity between terminals 3 and 5 with brake pedal released?
No
Open circuit in wire harness between terminal 2 of actuator and terminal 5 of ECU.
Yes (There is resistance approx. 38Ω)
CC ECU faulty.
Replace CC ECU. Then recheck system.

CONTINUED FROM PREVIOUS PAGE

CC ECU (3VZ–E)

Connect connector to stop light switch.
Disconnect connectors from CC ECU and inspect connectors on wire harness side as follows.

INSPECT MAGNET CLUTCH CIRCUIT
Is there approx. 38.5Ω between terminal 10 and 267

No → Open or short circuit in wire harness between terminals 10 of CC ECU and 5 of actuator.

Yes

INSPECT MOTOR CIRCUIT
Is there no continuity between terminal 12 and ground?

No → Short circuit in wire harness between terminals 12 of CC ECU and 6 of actuator.

Yes

Is there no continuity between terminal 11 and ground?

No → Short circuit in wire harness between terminals 11 of CC ECU and 7 of actuator.

Yes

Is there continuity between terminals 12 and 11 with actuator arm in a position except max. open or max. close?

No → Open circuit in wire harness between terminals 12 of CC ECU and 6 of actuator or between terminals 11 of CC ECU and 7 of actuator.

Yes

INSPECT POSITION SENSOR CIRCUIT
Is there no continuity between terminal 24 and ground?

No → Short circuit in wire harness between terminals 24 of CC ECU and 1 of actuator.

Yes

Is there approx. 2 kΩ between terminals 24 and 267

No →
- Open circuit in wire harness between terminals 26 of CC ECU and 3 of actuator.
- Open circuit in wire harness between terminals 24 of CC ECU and 1 of actuator.

Yes

Does resistance change even between terminals 26 and 25?

No → Open or short circuit in wire harness between terminals 25 of CC ECU and 2 of actuator.

Yes

Replace CC ECU. Then recheck system.

CC: Cruise Control

D INSPECTION OF SPEED SENSOR CIRCUIT

SPEED SENSOR

Disconnect connector from combination meter.

INSPECT GROUND CONNECTION
Is there continuity between terminal B of wire harness side connector and ground?

No →
- Open circuit in wire harness between terminal B of combination meter and ground.
- Ground faulty.

Yes ↓

INSPECT SPEED SENSOR OPERATION
Is there sensor operation normal?
(See page BE–48)

No → Vehicle speed sensor faulty.
Replace vehicle speed sensor. Then recheck system.

Yes ↓

Connect connectors to combination meter.

ECU

Disconnect connector from CC ECU and inspect connector on wire harness side as follows.
Turn ignition switch on.

INSPECT SPEED SENSOR CIRCUIT
Does the voltage between terminal 8 (20) and ground change repeatedly from 0 V to approx.
5 V or more when speedometer shaft is turned?

No → Open or short circuit in wire harness between terminal 8(20) of CC ECU and terminal A of combination meter.

Yes ↓

CC ECU faulty.
Replace CC ECU. Then recheck system.

( ): 3VZ–E

E INSPECTION OF STOP LIGHT SWITCH CIRCUIT

Turn ignition switch off.

Is STOP fuse normal?
- No → Replace fuse. Is operation normal?
  - No → Short circuit in wire harness between terminal 18 (1) of CC ECU or terminal 1 of stop light switch and fuse.
  - Yes → Fuse faulty.
- Yes

STOP LIGHT SWITCH

INSPECT GROUND CONNECTION
Disconnect connector from stop light switch. Is there continuity between terminal 3 of wire harness side connector and ground?
- No →
  - Open circuit in wire harness between terminal 3 and ground.
  - Bulb burned out.
  - Ground faulty.
- Yes

INSPECT STOP LIGHT SWITCH OPERATION
Is stop light switch operation normal?
(See page BE–118)
- No → Stop light faulty. Replace stop light switch. Then recheck system.
- Yes

Connect connector to stop light switch.

ECU

Disconnect connector from CC ECU and inspect connector on wire harness side as follows.

INSPECT STOP FUSE CIRCUIT
Is there battery positive voltage between terminal 17 (16) and ground with brake pedal released?
- Yes → Short circuit in wire harness between terminal 17 (16) of CC ECU and STOP fuse.
- No

Is there battery positive voltage between terminal 17 (16) and ground with brake pedal depressed?
- No → Open circuit in wire harness between terminal 17 (16) of CC ECU and STOP fuse.
- Yes

CC ECU faulty.
Replace CC ECU. Then recheck system.

( ): 3VZ–E

F INSPECTION OF PARKING BRAKE SWITCH CIRCUIT

Turn ignition switch off.

BRAKE FLUID LEVEL WARNING SWITCH

INSPECT GROUND CONNECTION
Disconnect connector from brake fluid level warning switch.
Is there continuity between terminal 2 of wire harness side connector and ground?

No →
- Open circuit in wire harness between terminal 2 of brake fluid level warning switch.
- Ground faulty.

Yes ↓

INSPECT LEVEL WARNING SWITCH
Is brake fluid level warning switch operation normal?
(See page BE–53)

No → Brake fluid level warning switch faulty.
Replace level warning switch.

Yes ↓

Connect the connector to brake warning switch.

PARKING BRAKE SWITCH

INSPECT GROUND CONNECTION
Disconnect connector from parking brake switch.
Is there continuity between terminal 2 of wire harness side connector and ground?

No →
- Open circuit in wire harness between terminal 2 of parking brake switch.
- Ground faulty.

Yes ↓

INSPECT PARKING BRAKE SWITCH OPERATION
Is parking brake switch operation normal?
(See page BE–53)

No → Replace parking brake switch.

Yes ↓

Connect connector to parking brake switch.

ECU

Disconnect connector from ECU and inspect connector on wire harness side as follows.

Ignition switch turned on.

Is there no voltage between terminal 14 (3) and ground with parking brake lever pulled up.

No → Open circuit in wire harness between terminal 14(3) of ECU and terminal 1 of parking brake switch or brake warning light.

Yes ↓

Is there battery positive voltage between terminal 14 (3) and body ground with parking brake released?

No → Short circuit in wire harness between terminal 14(3) of ECU and terminal 1 of parking brake switch, terminal 1 of brake fluid level warning switch or brake warning light.

Yes ↓

CC ECU faulty.
Replace CC ECU. Then recheck system.

( ): 3VZ–E

G INSPECTION OF CLUTCH SWITCH CIRCUIT

Turn ignition switch off .

CLUTCH SWITCH

INSPECT GROUND CONNECTION
Disconnect connector from clutch switch.
Is there continuity between terminal 2 of wire harness side connector and ground.

No → Open circuit in wire harness between terminal 2 of the clutch switch and ground.

Yes

INSPECT CLUTCH SWITCH OPERATION
Is clutch switch operation normal?
(See page BE–118)

No → Replace clutch switch.

Yes

Connect connector to clutch switch.

ECU

Disconnect connector from CC ECU and inspect connector on wire harness side as follows.

INSPECT CLUTCH SWITCH CIRCUIT
Is there continuity between terminal 13 (2)–and ground when clutch pedal is depressed?

No → Open circuit in wire harness between terminal 13 (2) of ECU and terminal 1 of clutch switch.

Yes

CC ECU faulty.
Replace CC ECU. Then recheck system.

( ): 3VZ–E

H INSPECTION OF PARK/NEUTRAL POSITION SWITCH CIRCUIT

Turn ignition switch off.

PARK/NEUTRAL POSITION SWITCH

INSPECT GROUND CONNECTION
Disconnect connector from park/neutral position switch.
Is there continuity between terminal 3 or wire harness side connector and ground?

No → Open circuit in wire harness between terminal 3 of park/neutral position switch and ground.

Yes

INSPECT PARK/NEUTRAL POSITION SWITCH OPERATION
Is park/neutral position switch operation normal?
(See pages AT2–40, AT1–41)

No → Replace park/neutral position switch.

Yes

Connect connector to park/neutral position switch.

ECU

Disconnect connector from CC ECU and inspect connector on wire harness side as follows.

INSPECT PARK/NEUTRAL POSITION SWITCH CIRCUIT
Is there continuity between terminal 13 (2) and ground when shifted to “N” and “P” position?

No → Open circuit in wire harness between terminal 13 (2) of ECU and terminal 2 of park/neutral position switch.

Yes

CC ECU faulty.
Replace CC ECU. Then recheck system.

( ) :3VZ–E

I INSPECTION OF VACUUM CIRCUIT (22R–E ENGINE)

Turn ignition switch off.

VACUUM HOSE

Are there cracks or other damage on the vacuum hose?

Yes → Replace vacuum hose.

No

VACUUM SWITCH

INSPECT VACUUM SWITCH CIRCUIT
Disconnect connector from vacuum switch.
Is there continuity terminal 2 of vacuum switch and ground?

No →
- Open circuit in wire harness between terminal 2 of vacuum switch and ground.
- Ground faulty.

Yes

INSPECT VACUUM SWITCH OPERATION
Is vacuum switch normal?
(See page **BE–118**)

No → Replace vacuum switch.

Yes

VACUUM PUMP

INSPECT GROUND CONNECTION
Disconnect connector from vacuum pump.
Is there continuity between terminal 2 of wire harness side connector and ground?

No →
- Open circuit in wire harness between terminal 2 of vacuum pump and ground.
- Ground faulty.

Yes

INSPECT VACUUM PUMP OPERATION
Is vacuum pump operation normal?
(See page BE–120)

No → Replace vacuum pump.

Yes

Connect connector to vacuum switch and pump.

CONTINUED ON NEXT PAGE

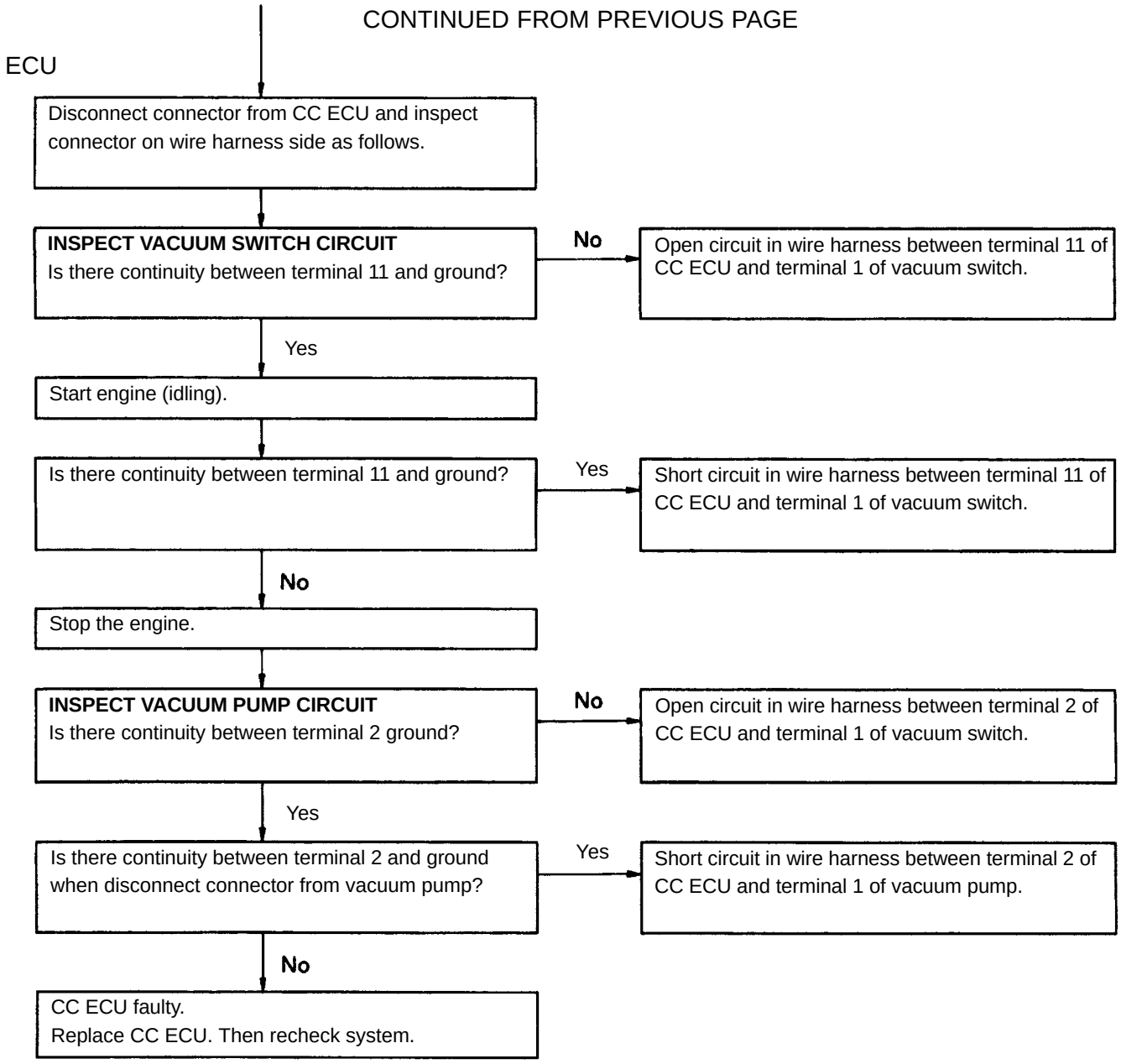
CONTINUED FROM PREVIOUS PAGE
ECU
Disconnect connector from CC ECU and inspect connector on wire harness side as follows.
INSPECT VACUUM SWITCH CIRCUIT
Is there continuity between terminal 11 and ground?
No
Open circuit in wire harness between terminal 11 of CC ECU and terminal 1 of vacuum switch.
Yes
Start engine (idling).
Is there continuity between terminal 11 and ground?
Yes
Short circuit in wire harness between terminal 11 of CC ECU and terminal 1 of vacuum switch.
No
Stop the engine.
INSPECT VACUUM PUMP CIRCUIT
Is there continuity between terminal 2 ground?
No
Open circuit in wire harness between terminal 2 of CC ECU and terminal 1 of vacuum switch.
Yes
Is there continuity between terminal 2 and ground when disconnect connector from vacuum pump?
Yes
Short circuit in wire harness between terminal 2 of CC ECU and terminal 1 of vacuum pump.
No
CC ECU faulty.
Replace CC ECU. Then recheck system.

J INSPECTION OF ECT SOLENOID CIRCUIT

Start engine (idling).

ECM

Is there battery positive voltage between terminal 6/26 of ECM and ground?

No → Short or open circuit in wire harness between terminal 6I26 of ECM and terminal 22 (9) of CC ECU.

Yes

Is there voltage approx. 5V between terminal 9 (7) of CC ECU and ground 7

No → Short or open circuit in wire harness between terminal 9 (7) of CC ECU and terminal of ECM.

Yes

Stop engine.

CC ECU

Disconnect connector from CC ECU and inspect connector on wire harness side as follows.

INSPECT ECT SOLENOID CIRCUIT
Is there continuity between terminal 22 (9) and terminal 6/26 of ECM ?

No → Open circuit in wire harness between terminal 22 (9) of CC ECU and terminal 6/26 of ECM.

Yes

Is resistance value about 11–15Ω between terminal 22 (9) and ground ?

No → Open or short circuit in wire harness between terminal 22 (9) or CC ECU and terminal of ECM or Electronically controlled transmission solenoid (No–2).

Yes

CC ECU faulty.
Replace CC ECU. Then recheck system.

( ): 3VZ–E

K IDL SIGNAL CIRCUIT

HINT: While carrying out the following inspection, make certain that the connectors and terminals are properly connected.

THROTTLE POSITION SENSOR

INSPECT THROTTLE POSITION SENSOR ADJUSTMENT (See pages AT2–27(A340H), AT1–25 (A340E,F)) Is throttle position sensor adjustment normal?

No → Adjust position sensor position. Then recheck system.

Yes

INSPECT THROTTLE POSITION SENSOR (See page AT–40)
Is throttle position sensor operation normal?

No → Replace throttle position sensor. Then recheck system.

Yes

CC ECU

Connect connector to throttle position sensor.
Disconnect connector from CC ECU and inspect connector on wire harness side as follows.

INSPECT IDL SIGNAL CIRCUIT
Is there continuity between terminal 23 and ground when acceleration pedal is released?

No → Open circuit in wire harness between terminals 23 of CC ECU and 2 of throttle position sensor.

Yes

Is there no continuity between terminal 23 and ground when acceleration pedal is depressed?

No → Short circuit in wire harness between terminals 23 of CC ECU and 2 of throttle position sensor.

Yes

Replace CC ECU. Then recheck system.

CC: Cruise Control

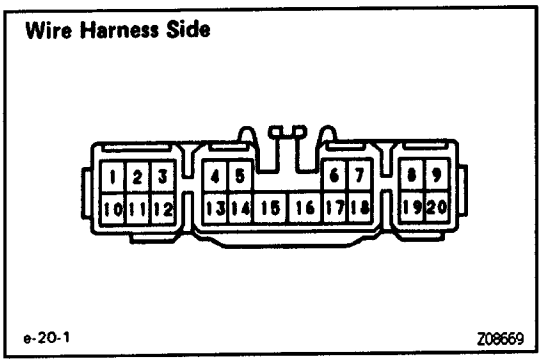

CRUISE CONTROL ECU INSPECTION

1. 22R–E

INSPECT ECU CIRCUIT

Disconnect the connector from the ECU and inspect the connector on the wire harness side, as shown below.

Connection or Measure Item	Check for	Tester Connection	Condition		Specified Condition
Data Link Connector 2	Continuity	1 – Ground	Short terminals between "^e" and "Ei"		Continuity
			Released		No continuity
Vacuum pump		2 – Ground	Constant		Continuity *1
Vehicle speed sensor (in combination motor)		8 – Ground	Vehicle moving slowly		1 pulse each 40 cm approx. (15.75 in.)
Vacuum switch		11 – Ground	Vacuum	No vacuum	Continuity
				More then 70 ± 30 mmHg (6.69 ± 1.18 in.Hg 22.66 ± 4.0 kPa)	No continuity
Park/Neutral position switch (AIT)		13 – Ground	Shift position	"N" or "P" position	Continuity
				"L", "2", "D" or "R" position	No continuity
Clutch switch (Mfr)		13 – Ground	Clutch pedal position	Depressed	Continuity
				Released	No continuity
Parking brake switch		14 – Ground	Parking brake lever position	Pulled	Continuity
				Released	No continuity
Body ground		15 – Ground	Constant		Continuity
Stop light switch		17 – 18	Brake pedal position	Depressed	Continuity *1
				Released	No continuity
CANCEL switch	Resistance	19 – Ground	Cruise control switch position	CANCEL switch is pushed	Approx. 418 Ω
				Released	No continuity
RESUME/ACCEL switch		19 – Ground		RESUME/ACCEL switch is pushed	Approx. 68Ω
				Released	No continuity
SET/COAST switch		19 – Ground		SET/COAST switch is pushed	Approx. 198 Ω
				Released	No continuity
Stop light switch and actuator (release valve)		3 – 16	Brake pedal position	Depressed	No continuity
				Released	Approx. 71 Ω
Actuator lcontrol valve)		5 – 16	Constant		Approx. 38 Ω
No. 2 solenoid valve		9 – Ground	Constant		less than 15 Ω
GAUGE fuse and indicator light	Voltage	4 – Ground	Ignition switch position	ON	Battery positive voltage
				LOCK, ACC	No voltage
ENGINE fuse		6 – Ground	Ignition switch position	ON	Battery positive voltage
				LOCK, ACC	No voltage
O/D circuit		7 – Ground	Ignition switch position	ON	Approx. 5 V or more
				LOCK or ACC	No voltage
ENGINE fuse, main switch and main relay		10 – Ground	Ignition switch ON and main switch position	ON	less than 0.3 V
				OFF	No voltage
		12 – Ground	Ignition switch ON and main switch position	ON	Battery positive voltage
				OFF	No voltage
Engine signal		20 – Ground	Ignition switch position	ON or ST	Battery positive voltage
				LOCK or ACC	No voltage

* 1 There is resistance in the circuit.

If circuit is not as specified, replace the ECU.

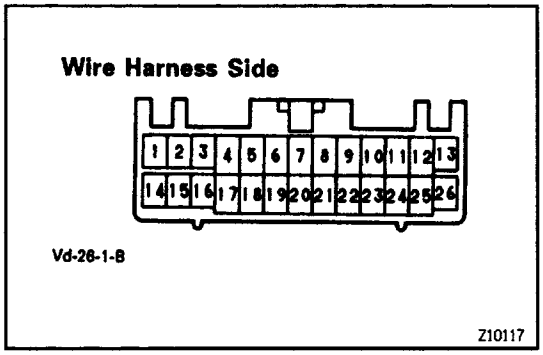

2. 3VZ – E

INSPECT ECU CIRCUIT

Disconnect the connector from the ECU and inspect the connector on the wire harness side, as shown below.

Check for	Measured Item,	Tester connection	Condition		Specified condition
Continuity	Park/Neutral position switch	**2 – ground**	Shift lever position	Nor P	**Continuity**
				L,2,D or R	**No continuity**
	Clutch switch	**2 – ground**	Clutch pedal position	released	**No continuity**
				depressed	**Continuity**
	Parking brake switch	**3 – ground**	Parking brake lever position	released	**No continuity**
				pulled	**Continuity**
	Control switch	**19 – ground**	Main switch position	OFF	**No continuity**
				ON	**Continuity**
	Ground connection	**13 – ground**	Constant		**Continuity**
	Control switch	**18 – ground**	Control switch position	RES/ACC	**68 Ω**
			Control switch position	SET/COAST	**198 Ω**
			Control switch position	CANCEL	**418 Ω**
	Actuator (motor)	***11 – 12**	Actuator arm position	max. OPEN	**(12 → 11) Continuity**
				max. CLOSE	**(11 → 12) Continuity**
				any position except above position	**(12 → 11) Continuity**
	DLC1 Circuit	**8 – ground**	Constant		**No continuity**
			Terminals Tc and E1 connected		**Continuity**
	Throttle position sensor 11DL)	**21 – ground**	Acceleration pedal position	released	**Continuity**
				depressed	**No continuity**
	No. 1 vehicle speed sensor	**20 – ground**	With Ignition switch ON, speedometer shaft or No. 1 vehicle speed sensor shaft turned.		**Continuity ⇕ No continuity**
Resistance	Actuator (position sensor)	**24 – 23**	Constant		**Approx. 2 kΩ**
		24 – 25	Actuator arm turned		**Resistance change even**
	Actuator (magnet clutch)	**10 – 26**	Brake pedal position	released	**Approx. 38.5 Ω**
				depressed	**No continuity**
Voltage	Power source	**14 – ground**	Ignition switch position	LOCK or ACC	**No voltage**
				ON	**Battery positive voltage**
	STOP fuse	**1 – ground**	Constant		**Battery positive voltage**
	Stop light	**16 – ground**	Broke pedal position	released	**No voltage**
				depressed	**Battery positive voltage**
	No. 2 solenoid	**22 – ground**	Ignition switch position	LOCK or ACC	**No voltage**
				ON	**Battery positive voltage**

* : This circuit include the diode.

If circuit is not as specified, replace the ECU.

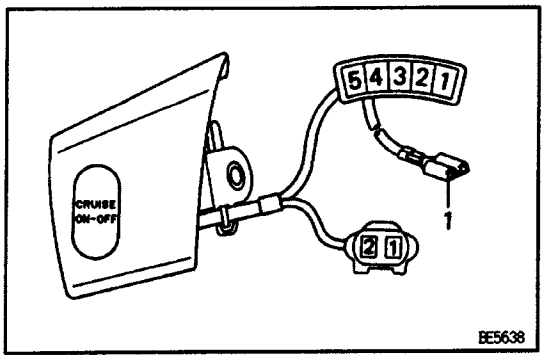

MAIN SWITCH INSPECTION

INSPECT MAIN SWITCH CONTINUITY

Condition	Tester connection to terminal number	Specified condition
Constant	**4/5 – 2/2**	**Continuity**
Constant	**2/5 – 1/2**	**Continuity**
Constant	**1/5 – 1/1**	**Continuity**
ON	**4/5 – 1/2**	**Continuity**

If continuity is not as specified, replace the switch.

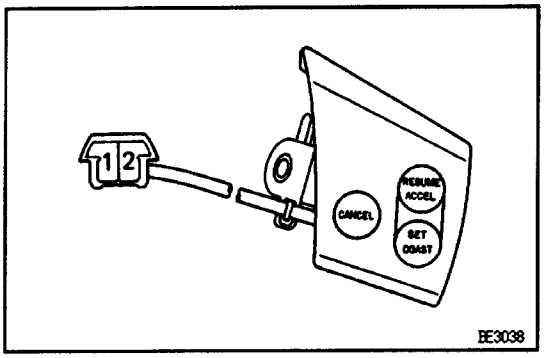

CRUISE CONTROL SWITCH INSPECTION

INSPECT CRUISE CONTROL SWITCH RESISTANCE

Measure the resistance value between terminals 1 and 2.

Switch position	Resistance (Ω)
OFF	**No continuity**
RESUME/ ACCEL	**Approx. 68**
SET/ COAST	**Approx. 198**
CANCEL	**Approx. 418**

If resistance value is not as specified, replace the switch.

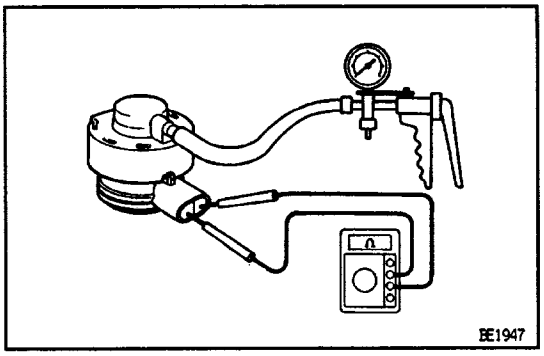

22R– E

VACUUM SWITCH INSPECTION

INSPECT VACUUM SWITCH OPERATION

(a) Check that there is continuity between terminals with no vacuum.

(b) Check that there is no continuity between terminals with a vacuum of 22.66 ± 4.00 kPa (170 ± 30 mmHg, 6.69 ± 1.18 in.Hg) or above.

If operation is not as specified, replace the switch.

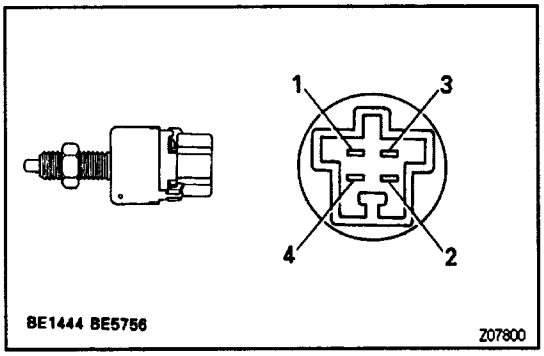

STOP LIGHT SWITCH INSPECTION

INSPECT STOP LIGHT SWITCH CONTINUITY

Switch position	Tester connection to terminal number	Specified continuity
Switch pin free (Brake pedal depressed)	**1 – 3**	**Continuity**
Switch pin pushed in (Brake pedal released)	**2 – 4**	**Continuity**

If continuity is not as specified, replace the switch.

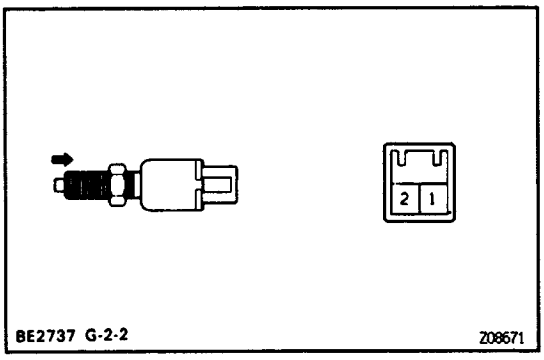

CLUTCH SWITCH INSPECTION

INSPECT CLUTCH SWITCH CONTINUITY

Switch position	Tester connection to terminal number	Specified condition
Switch pin free (Clutch pedal depressed)	**1 – 2**	**Continuity**
Switch pin pushed in (Clutch pedal released)	**–**	**No continuity**

If continuity is not as specified, replace the switch.

BRAKE FLUID LEVEL WARNING SWITCH INSPECTION

See page BE–53

PARKING BRAKE SWITCH INSPECTION

See page BE–53

PARK/ NEUTRAL POSITION SWITCH INSPECTION

See pages AT2–40, AT1–41

SPEED SENSOR INSPECTION

See page BE–48

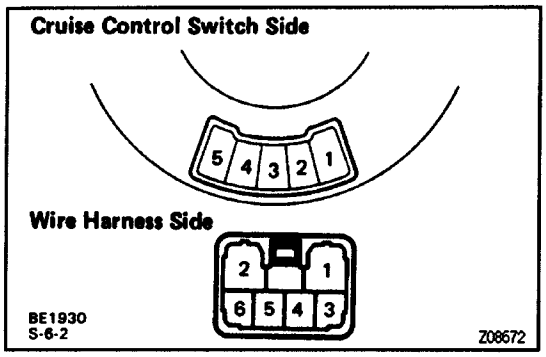

SLIP RING INSPECTION

INSPECT SLIP RING CONTINUITY

Condition	Tester connection to terminal number	Specified condition
Constant	2/5 – 6/6	Continuity
Constant	3/5 – 4/6	Continuity
Constant	4/5 – 5/6	Continuity

If continuity is not as specified, replace the slip ring.

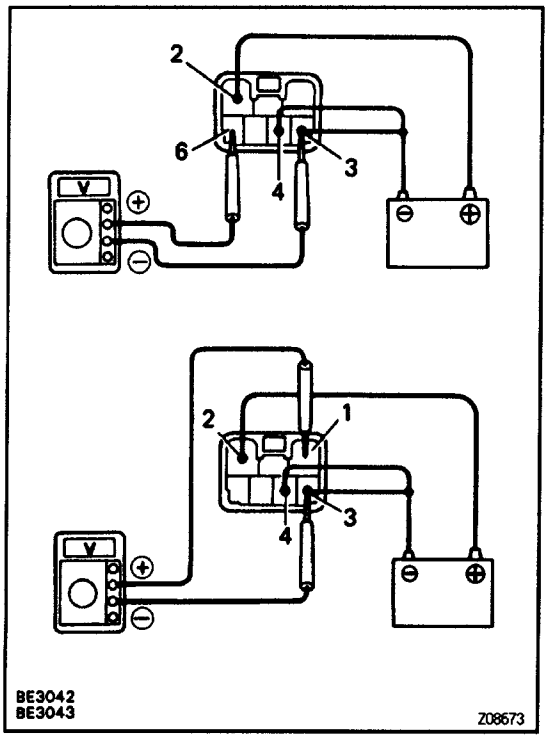

22R–E

MAIN RELAY INSPECTION

INSPECT MAIN RELAY OPERATION

(a) Connect the positive (+) lead from the battery to terminal 2 and the negative (–) lead to terminals 3 and 4.

(b) Connect the positive (+) lead from the voltmeter to terminal 6 and the negative (–) lead to terminal 3, check that there is battery positive voltage.

(c) Change the positive (+) lead of the voltmeter to terminal 1, check that there is voltage less than 0.3 V.
If operation is not as specified, replace the relay.

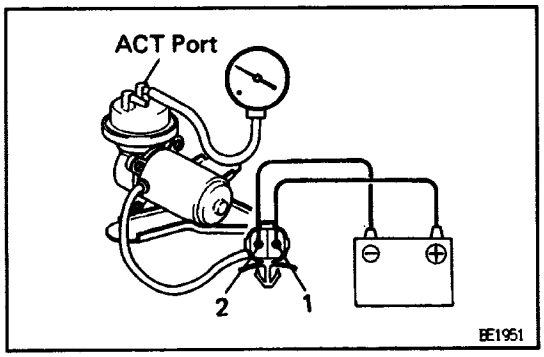

22R–E
VACUUM PUMP INSPECTION

INSPECT VACUUM PUMP OPERATION

(a) Connect a vacuum gauge to the ACT side of the pump.
(b) Connect the positive (+) lead from the battery to terminal 1 and the negative (–) lead to terminal 2.
(c) Check that there is a vacuum of 26.7 kPa (200 mmHg, 7.87 in.Hg) or above.
If operation is not as specified, replace the pump.

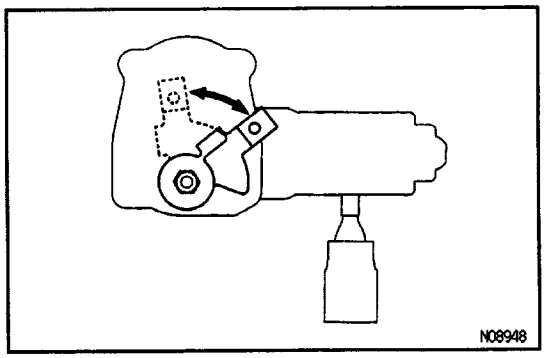

ACTUATOR INSPECTION

1. INSPECT MAGNETIC CLUTCH

3VZ–E Engine:

(a) Check that the arm can be moved smoothly by hand.

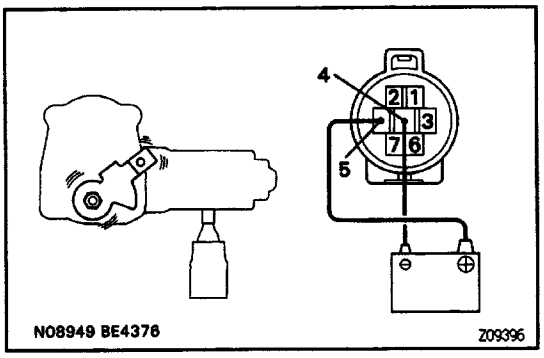

(b) Connect the positive (+) lead from the battery to terminal 5 and the negative (–) lead to terminal 4.
(Magnetic clutch turned ON)
(c) Check that the arm does not moves by hand.

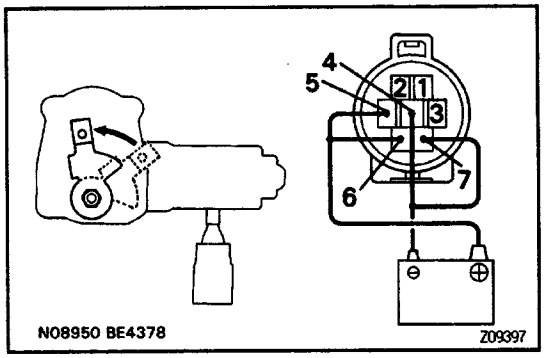

2. INSPECT MOTOR

(a) With the magnetic clutch ON, connect the positive (+) lead from the battery to terminal 6 and the negative (–) lead to terminal 7, check that the arm moves to the open side.
(b) When the arm reached to the open position, check that the motor operation stops.

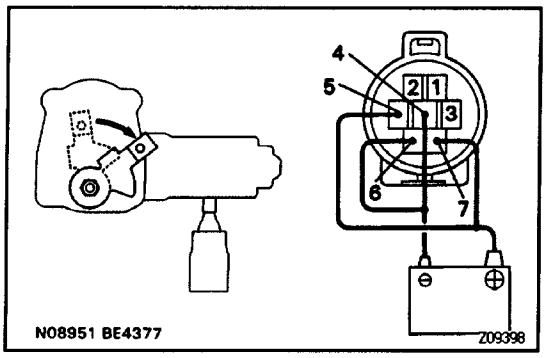

(c) With the magnetic clutch ON, connect the positive (+) lead from the battery to terminal 7 and the negative (–) lead to terminal 6, check that the arm moves to the closed side.

(d) When the arm reaches to the closed position, check that the motor operation stops.

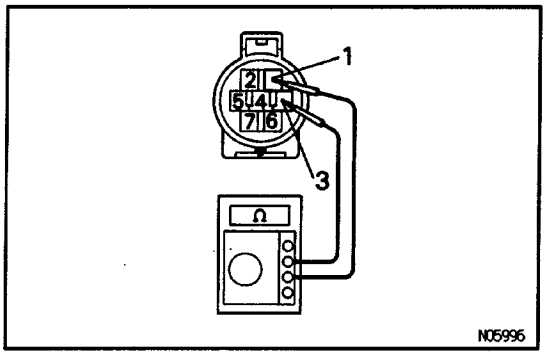

3. INSPECT POSITION SENSOR

(a) Measure the resistance between terminal 1 and 3.

Resistance:

Approx. 2 kΩ

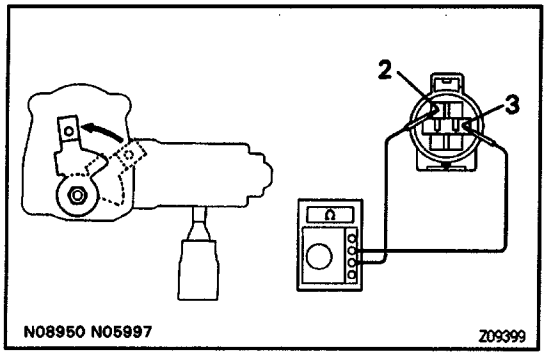

(b) When the arm is moving from the closed to open position, check that resistance between terminal 2 and 3 increases from approx. 0.5 to 1.8 kΩ.

If operation is not as specified, replace the motor.

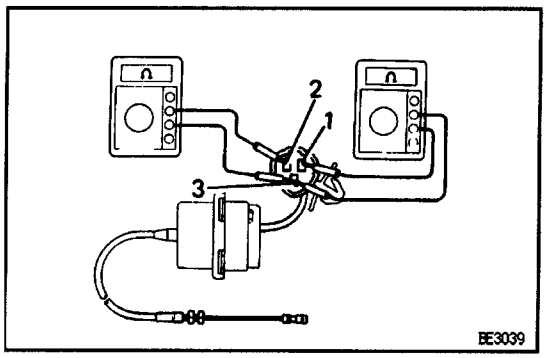

4. INSPECT ACTUATOR

22R – E Engine:

Resistance

Measure the resistance value between terminals as follows.

Resistance:

1 – 3 Approx. 71Ω

2 – 3 Approx. 38Ω

If the resistance value is not as specified, replace the actuator.

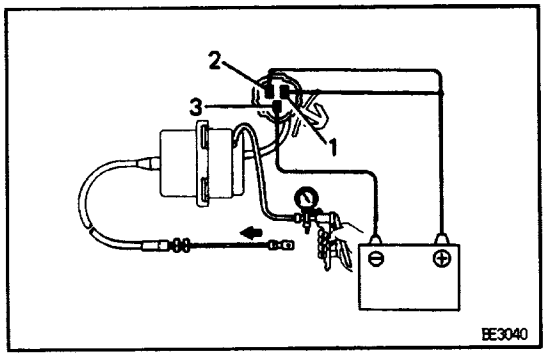

Operation

(a) Connect the positive (+) lead from the battery to terminals 1 and 2, and the negative (–) lead to terminal 3.

(b) Slowly apply vacuum from 0 to 40.0 kPa (0 to 300 mmHg, 0 to 11.81 in.Hg), check that the control cable can be pulled smoothly.

Cable stroke:

Approx.. 38 mm (1.42 in.)

(c) With the vacuum stabilized, check that the control cable does not return.

HINT: As you apply and hold the vacuum with the vacuum pump, the drawn in diaphragm will in some cases return. This does not indicate a malfunction.

Actuator leakage is allowable.

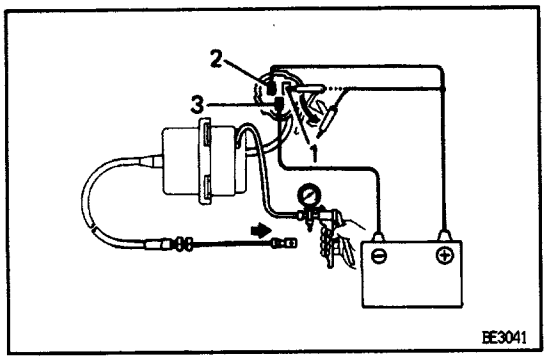

(d) Disconnect terminal 1 or 2 and check that the control cable returns to its original position and the vacuum returns to 0 kPa (0 mmHg, 0 in.Hg).

If operation is not as specified, replace the actuator.

DEFOGGER SYSTEM

PARTS LOCATION

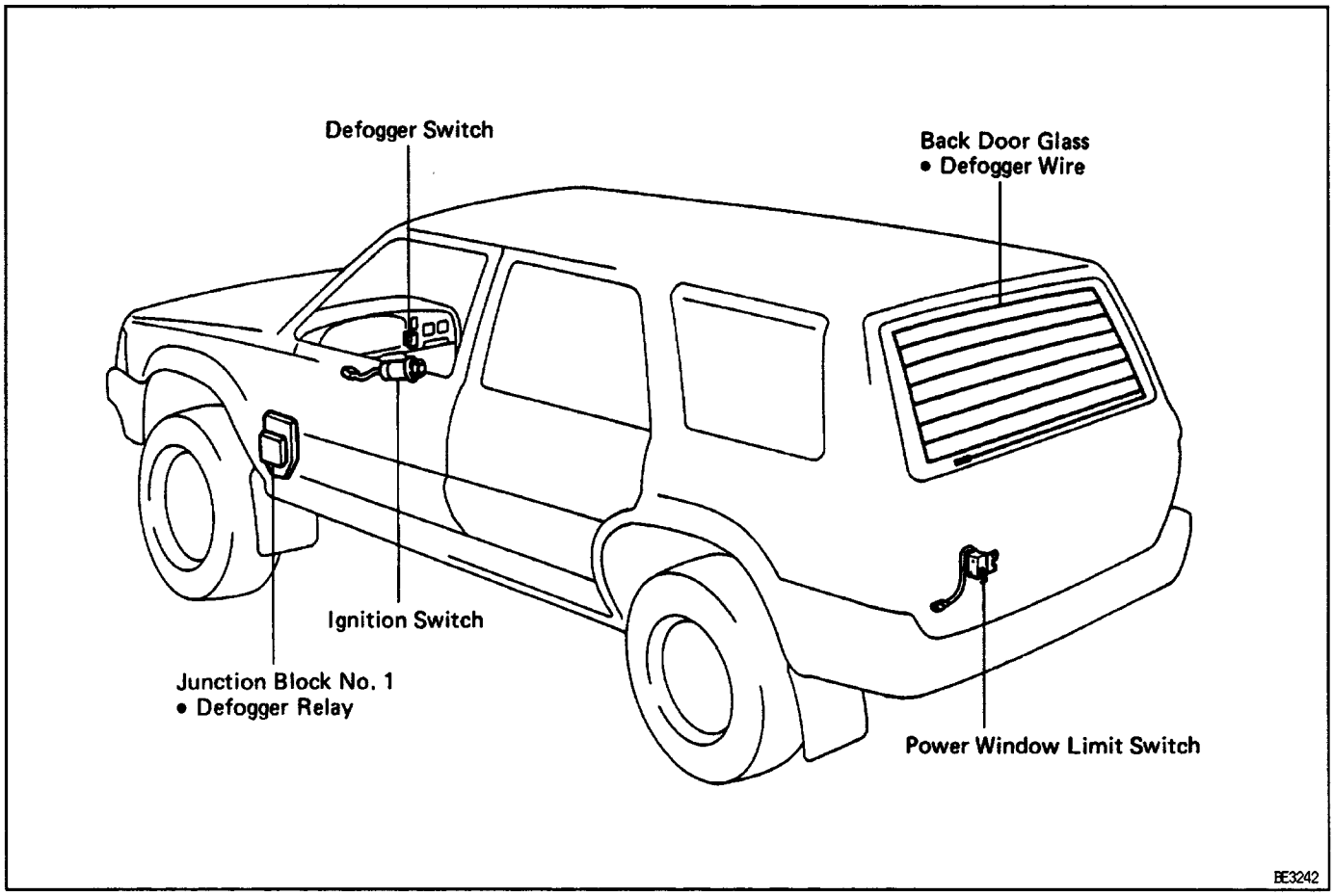

TROUBLESHOOTING

The table below will be useful for you in troubleshooting these electrical problems. The most likely causes of the malfunction are shown in the order of their probability. Inspect each part in the order shown, and replace the part when it is found to be faulty.

Trouble	Parts name	(See page)
Defogger System does not operate	1. GAUGE Fuse	(BE–11)
	2. DEFOG Fuse	(BE–11)
	3. Defogger Switch	(BE–59)
	4. Defogger Relay	(BE–59)
	5. Wire Harness	

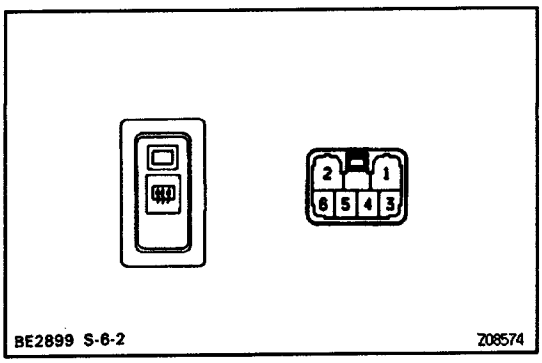

DEFOGGER SWITCH INSPECTION

INSPECT DEFOGGER SWITCH CONTINUITY

Switch position	Tester connection to terminal number	Specified condition
Switch OFF	–	**No continuity**
Switch ON	**2 – 3 – 6**	**Continuity**
Switch ON Illumination circuit	**2 – 3**	**Continuity**
Illumination circuit	**1 – 4**	**Continuity**

If continuity is not as specified, replace the switch.

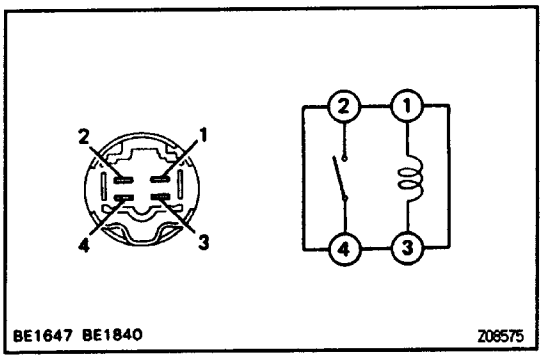

DEFOGGER RELAY INSPECTION

INSPECT DEFOGGER RELAY CONTINUITY

Condition	Tester connection to terminal number	Specified condition
Constant	**1 – 3**	**Continuity**
Apply B+ between terminals 1 and 3.	**2 – 4**	**Continuity**

If continuity is not as specified, replace the relay.

DEFOGGER WIRE INSPECTION

INSPECT DEFOGGER WIRE

NOTICE:

- **When cleaning the glass, use a soft, dry cloth, end wipe the glass in the direction of the wire. Take care not to damage the wires.**
- **Do not use detergents or glass cleaners with abrasive ingredients.**
- **When measuring voltage, wind a piece of tin foil around the top of the negative (–) probe and press the foil against the wire with your finger, as shown.**

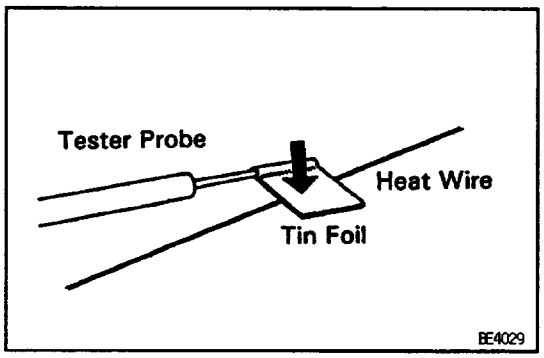

Wire Breakage

(a) Turn the ignition switch ON.
(b) Push in the defogger switch.
(c) Inspect the voltage at the center of each heat wire, as shown.

Voltage	Criteria
Approx. 5 V	**Okay (No break in wire)**
Approx. 10 V or 0 V	**Broken wire**

HINT: If there is 10V, the wire is broken between the center of the wire and positive (+) end. If there is no voltage, the wire is broken between the center of the wire and ground.

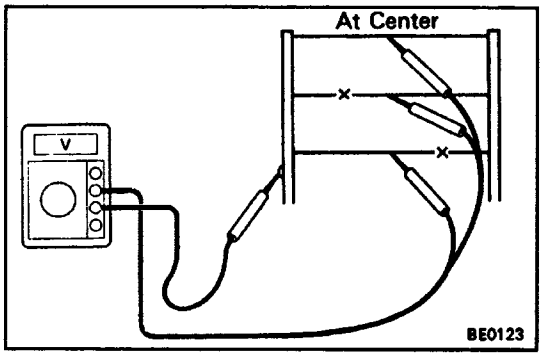

Wire Breakage Point

(a) Place the voltmeter positive (+) lead against the defogger positive (+) terminal.
(b) Place the voltmeter negative (–) lead with the foil strip against the heat wire at the positive (+) terminal end and slide it toward the negative (–) terminal end.
(c) The point where the voltmeter deflects from 0 to several volts is the place where the heat wire is broken.
HINT: If the heat wire is not broken, the voltmeter indicates 0 volts at the positive (+) end of the heat wire but gradually increases to about 12 volts as the meter probe is moved to the other end.

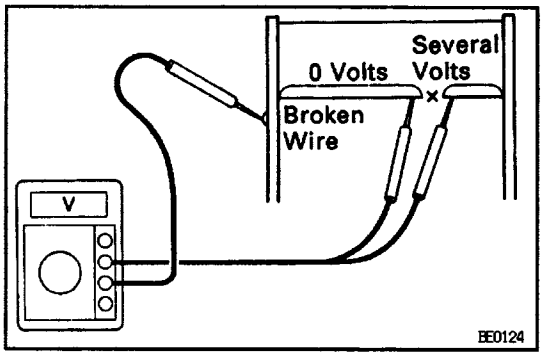

Defogger wire repair

(a) Clean the broken wire tips with a grease, wax and silicone remover.
(b) Place the masking tape along both sides of the wire to be repaired.

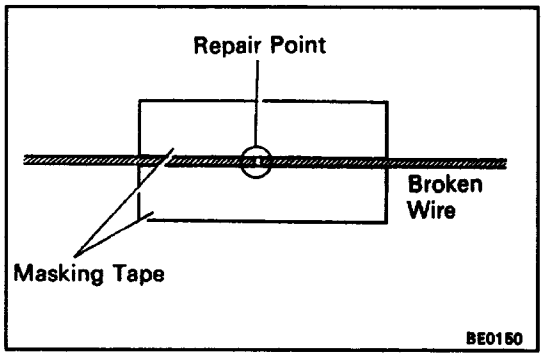

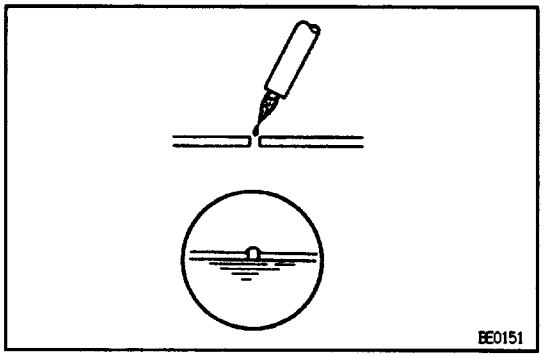

(c) Thoroughly mix the repair agent (Dupont paste No. 4817 or equivalent).
(d) Using a fine tip brush, apply a small amount to the wire.
(e) After a few minutes, remove the masking tape.
(f) Allow the repair to stand at least 24 hours.

BODY ELECTRICAL SYSTEM

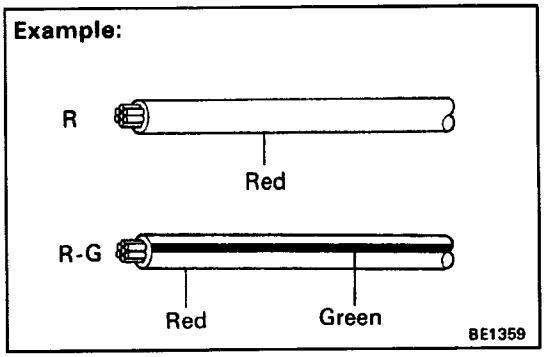

GENERAL INFORMATION

WIRING COLOR CODE

Wire colors are indicated by an alphabetical code.

B = Black L = Blue R = Red
BR = Brown LG = Light Green V = Violet
G = Green O = Orange W = White
GR = Gray P = Pink Y = Yellow

The first letter indicates the basic wire color and the second letter indicates the color of the stripe.

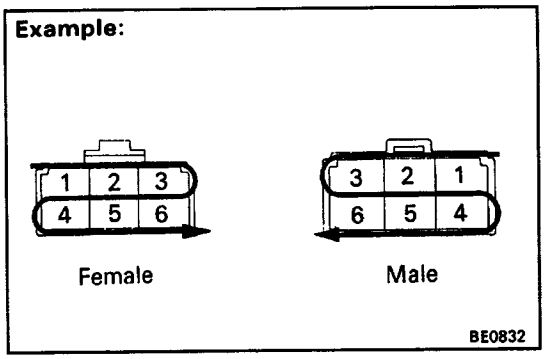

CONNECTOR

1. PIN NUMBER OF FEMALE CONNECTOR

Numbered in order from upper left to lower right.

2. PIN NUMBER OF MALE CONNECTOR

Numbered in order from upper right to lower left.

HINT: When connectors with different or the same number of terminals are used with the same parts, each connector name (letter of the alphabet) and pin number is specified.

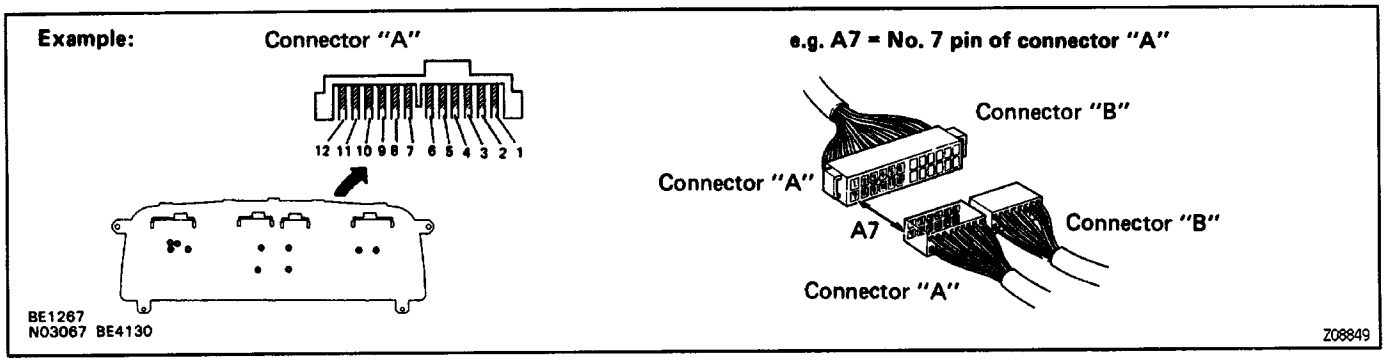

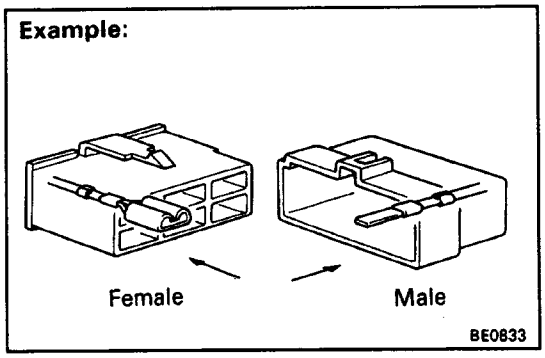

3. DISTINGUISHING BETWEEN MALE AND FEMALE CONNECTORS

Male and female connectors are distinguished by the shape of their internal pins.

(a) All connectors are shown from the open end, and the lock is on top.

(b) To pull apart the connectors, pull on the connector itself, not the wires.

HINT: Check to see what kind of connector you are disconnecting before pulling apart.

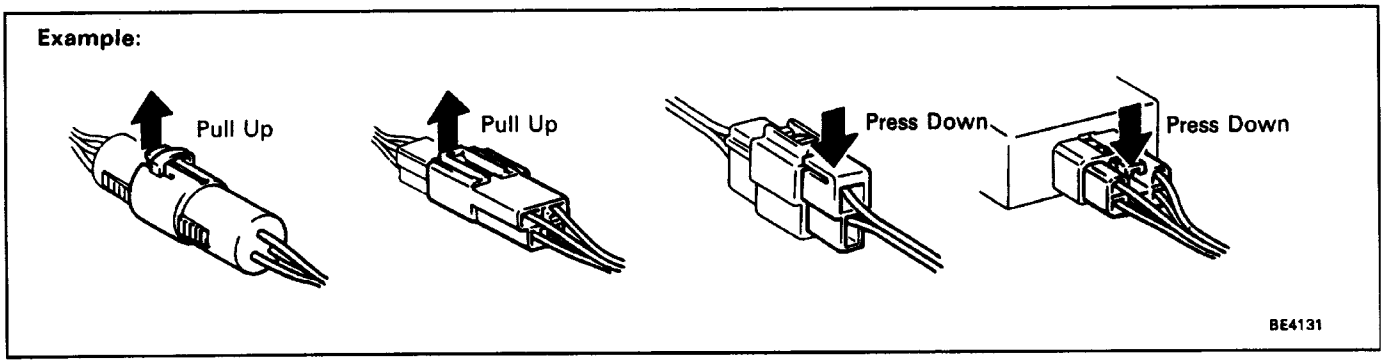

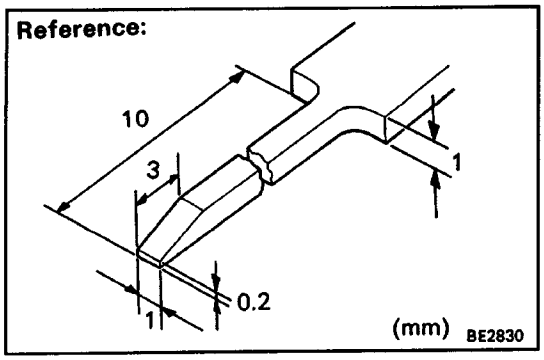

HOW TO REPLACE TERMINAL (With Terminal Retainer Type)

HINT: To remove the terminal for this type of connector, please construct and use the special tool or like object shown on the left.

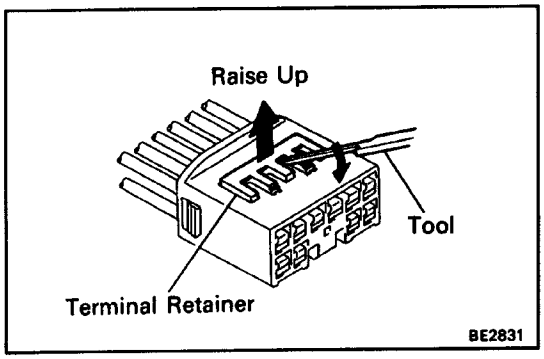

1. DISCONNECT CONNECTOR

Disconnect the connector according to the instructions on BE–2.

2. DISCONNECT TERMINAL FROM CONNECTOR

(a) Using the special tool, raise the retainer up to the temporary lock position.

HINT: The needle insertion position varies according to the connector's shape (number of terminals, etc.), so check the position before inserting it.

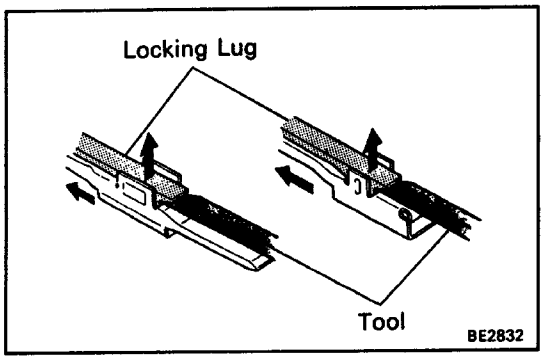

(b) Using the special tool, release the locking lug and pull the terminal out from rear.

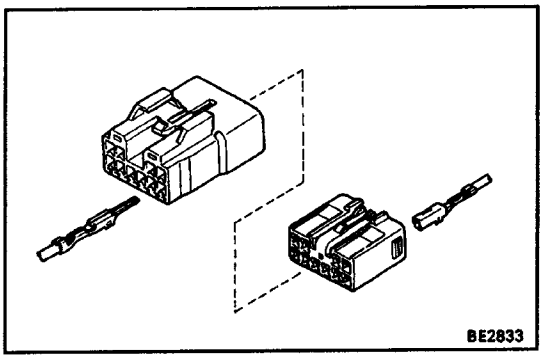

3. INSTALL TERMINAL TO CONNECTOR

(a) Insert the terminal.

HINT:

(1) Make sure the terminal is positioned correctly.

(2) Insert the terminal until the locking lug locks firmly.

(3) Insert the terminal with retainer in the temporary lock position.

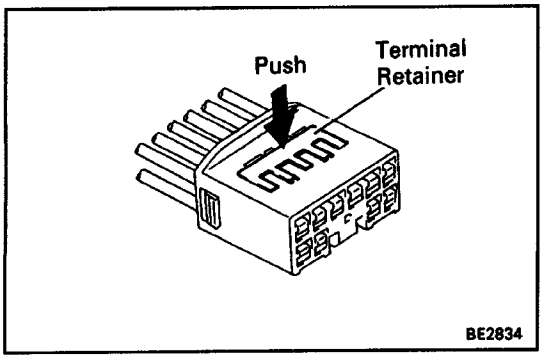

(b) Push the retainer in as for as the full lock position.

4. CONNECT CONNECTOR

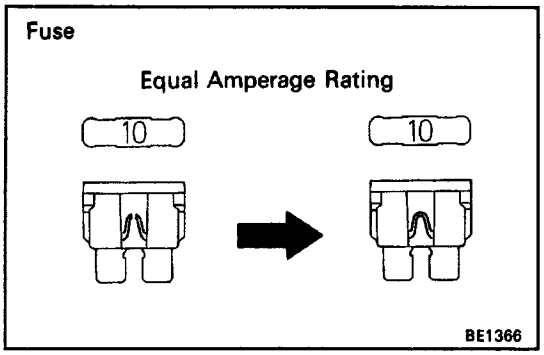

FUSE REPLACEMENT

HINT: If replacing the fuse be sure to replace it with a fuse or fusible link with an equal amperage rating.

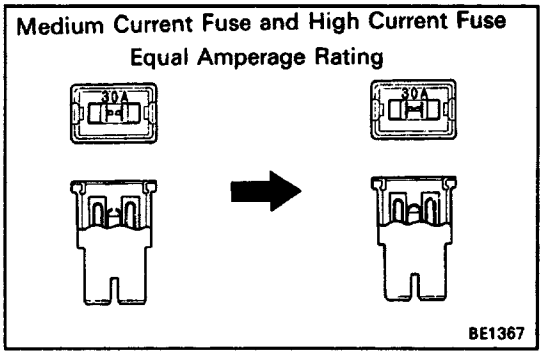

NOTICE:

- **Turn off all electrical components and the ignition switch before replacing a fuse or fusible link. Do not exceed the fuse or fusible link amperage rating.**

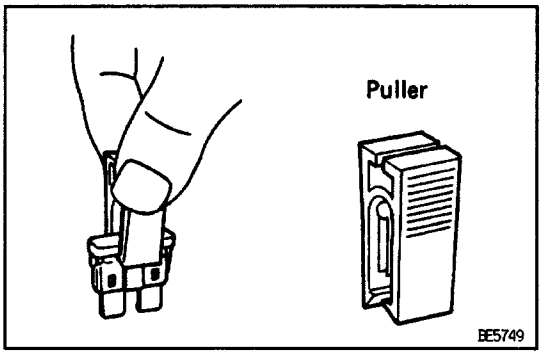

- **Always use a fuse puller for removing and inserting a fuse. Remove and insert straight in and out without twisting. Twisting could force open the terminals too much, resulting in a bad connection.**

If a fuse or fusible link continues to blow, a short circuit is indicated. The system must be checked by a qualified technician.

HINT: The puller is located at relay block No.2.

VOLTAGE CHECK

(a) Establish conditions in which voltage is present at the check point.

Example:

(A)–ignition SW on

(B)–Ignition SW and SW 1 on

(C)–Ignition SW, SW 1 and Relay on (SW 2 off)

(b) Using a voltmeter, connect the negative (–) lead to a good ground point or negative (–) battery terminal and the positive (+) lead to the connector or component terminal. This check can be done with a test bulb instead of a voltmeter.

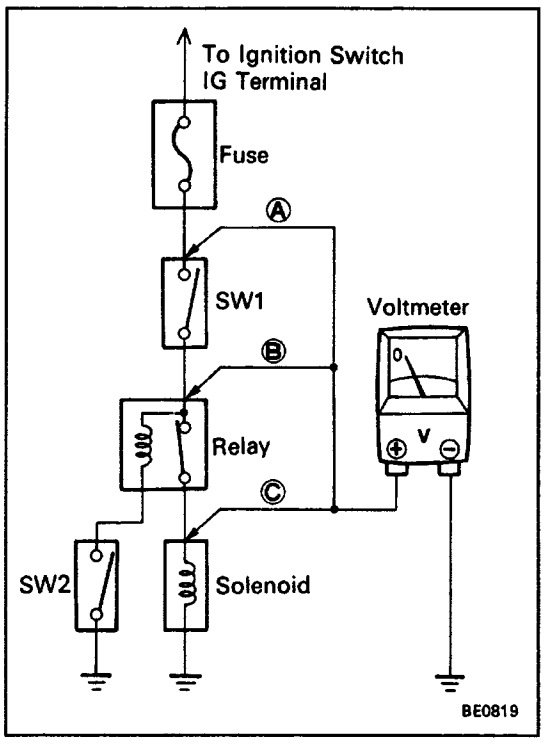

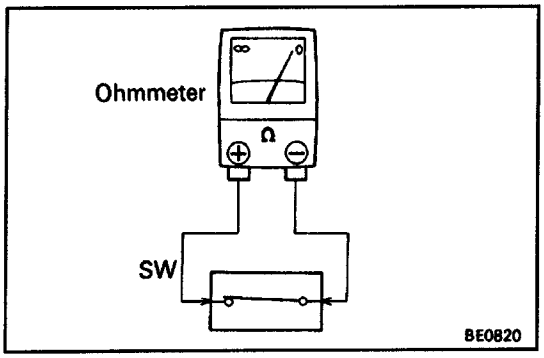

CONTINUITY AND RESISTANCE CHECK

(a) Disconnect the battery terminal or wire so there is no voltage between the check points.

(b) Contact the 2 leads of an ohmmeter to each of the check points.

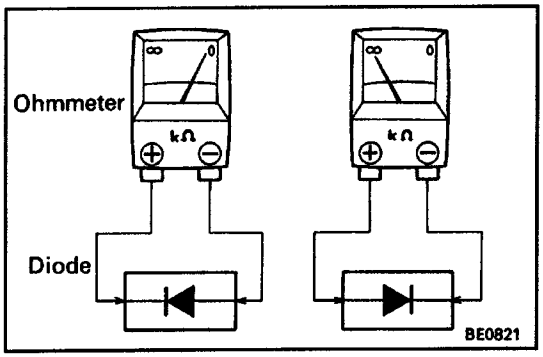

If the circuit has diodes, reverse the 2 leads and check again.

When contacting the negative (–) lead to the diode positive (+) side and the positive (+) lead to the negative (–) side, there should be continuity. When contacting the 2 leads in reverse, there should be no continuity.

HINT: Specifications may vary depending on the type of tester, so refer to the tester's instruction manual before performing the inspection.

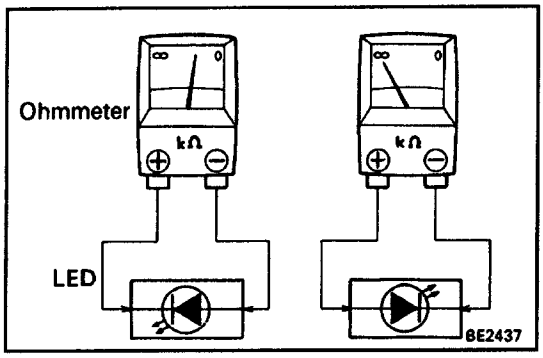

Check LED (Light Emitting Diode) in the same manner as that for diodes.

HINT:

- Use a tester with a power source of 3 V or greater to overcome the circuit resistance.
- If a suitable tester is not available, apply battery positive voltage and check that the LED lights up.

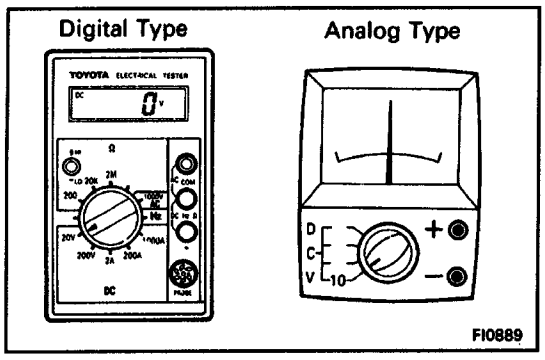

(c) Use a volt / ohmmeter with high impedance (10 kΩ/V minimum) for troubleshooting of the electrical circuit.

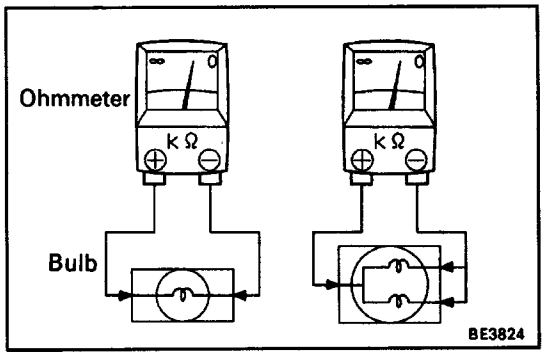

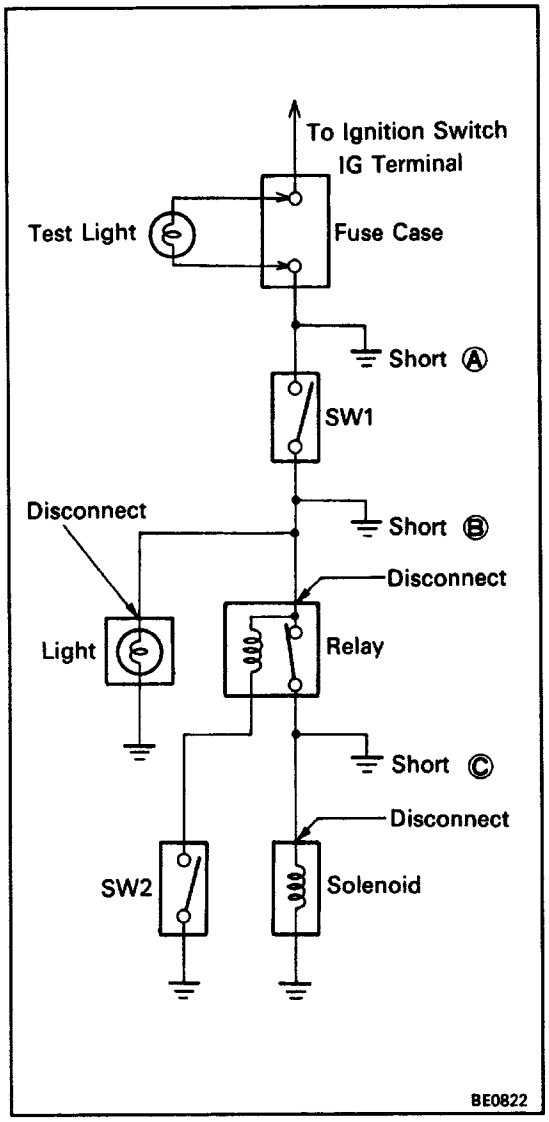

BULB CHECKING

(a) Remove the bulb.
(b) There should be continuity between the respective terminals of the bulb together with a certain amount of resistance.
(c) Apply the 2 leads of the ohmmeter to each of the terminals.
(d) Apply battery positive voltage and check that the bulb lights up.

SHORT CIRCUIT CHECK

(a) Remove the blown fuse and eliminate all loads from the fuse.
(b) Connect a test bulb in place of the fuse.
(c) Establish conditions in which the test bulb comes on.
Example:
(A)–Ignition SW on
(B)–Ignition SW and SW 1 on
(C)–Ignition SW, SW 1 and relay on (Connect the relay) and SW 2 off (or disconnect SW 2)
(d) Disconnect and reconnect the connectors while watching the test bulb.
The short lies between the connector where the test bulb stays lit and the connector where the bulb goes out.
(e) Find the exact location of the short by lightly shaking the problem wire along the body.

ELECTRICAL PARTS

Before removing and inspection the electrical parts, set the ignition switch to the LOCK position and disconnect the negative (–) terminal cable from the battery.

HOW TO INSPECT FOR SYSTEM INSPECTION

This inspection procedure is a simple troubleshooting which should be carried out on the vehicle during system operation and was prepared on the assumption of system component troubles (except for the wires and connectors, etc.). Always inspect the trouble taking the following items into consideration.

- Ground point fault.
- Open or short circuit of the wire harness.
- Connector or terminal connection fault.
- Fuse or fusible link fault.

NOTICE:

- **This is an on–vehicle inspection during system operations. Therefore, inspect the trouble with due regard for security.**
- **In case of connecting the battery directly, be careful not to short circuit, and select the applicable voltage.**

HEADLIGHT AND TAILLIGHT SYSTEM

PARTS LOCATION

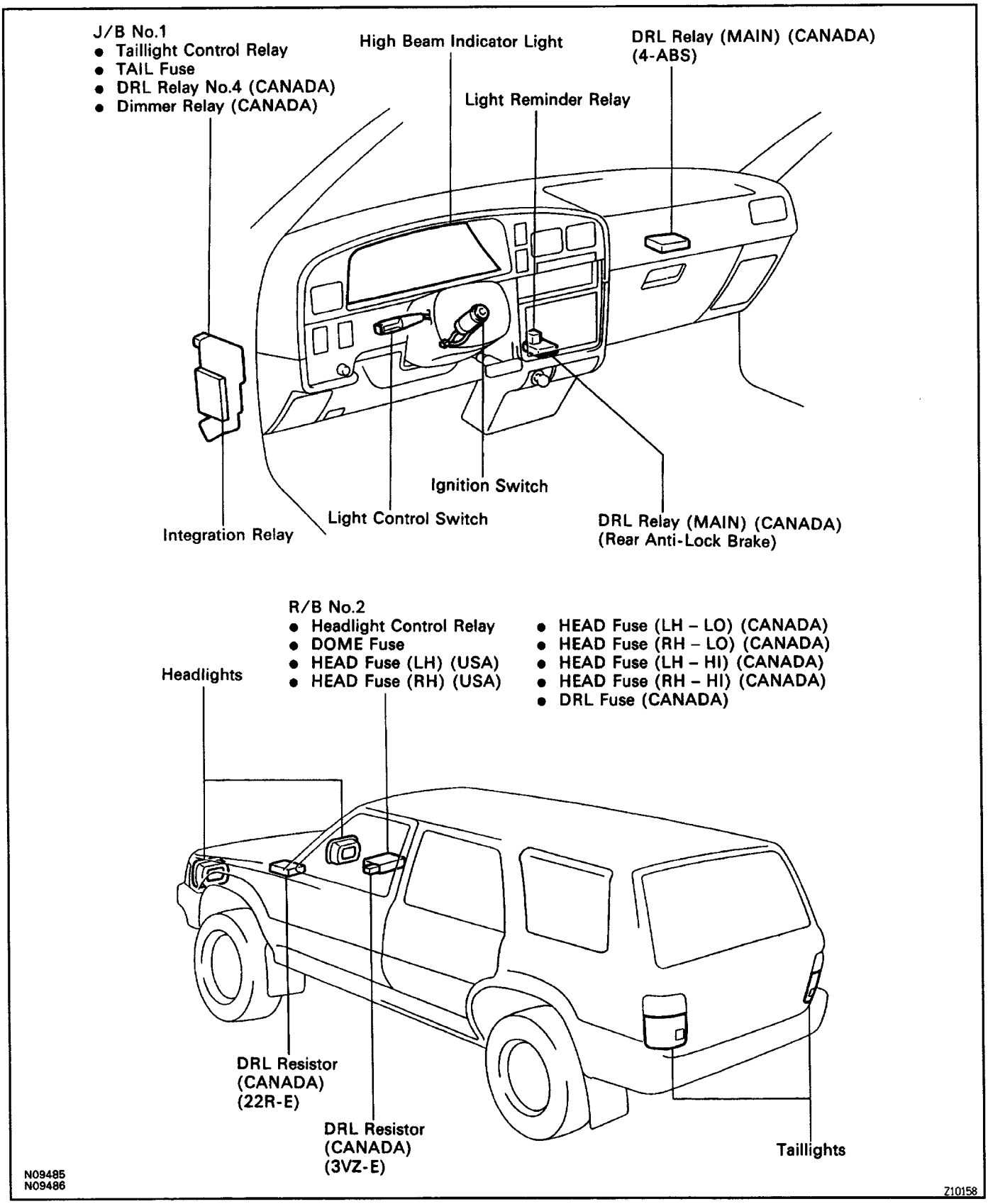

TROUBLESHOOTING

The table below will be useful for you in troubleshooting these electrical problems. The most likely causes of the malfunction are shown in the order of their probability. Inspect each part in the order shown, and replace the part when it is found to be faulty.

USA

Trouble	Parts name	(See page)
Headlight does not light up (Taillight is normal)	1. Headlight Bulb 2. HEAD Fuse 3. Headlight Control Relay 4. Light Control Switch 5. Dimmer Switch 6. Wire Harness	 (BE–11) (BE–21) (BE–21) (BE–21)
Taillight does not light up (Headlight is normal)	1. Taillight Bulb 2. TAIL Fuse 3. Taillight Control Relay 4. Light Control Switch 5. Wire Harness	 (BE–11) (BE–22) (BE–21)
Headlight and Taillight does not light up	1. Bulbs 2. HEAD Fuse 3. TAIL Fuse 4. Headlight Control Relay 5. Taillight Control Relay 6. Light Control Switch 7. Dimmer Switch 8. Wire Harness	 (BE–11) (BE–11) (BE–21) (BE–22) (BE–21) (BE–21)
Only one light comes on	1. Bulbs 2. HEAD Fuse 3. Wire Harness	 (BE–11)
’Lo–Beam” does not light up	1. Headlight Bulb 2. Dimmer Switch 3. Wire Harness	 (BE–21)
”Hi–Beam” does not light up	1. Headlight Bulb 2. Dimmer Switch 3. Wire Harness	 (BE–21)
”Flash” does not light up	1. Headlight Bulb 2. Dimmer Switch 3. Wire Harness	 (BE–21)
Only one Taillight goes out or does not light up	1. Taillight Bulb 2. Wire Harness	
Rear Combination light does not light up	1. Taillight Bulb 2. TAIL Fuse 3. Taillight Control Relay 4. Wire Harness	 (BE–11) (BE–22)

CANADA

Trouble	Parts name	(See page)
Headlight does not light up (Taillight is normal)	1. Headlight Bulb	
	2. Headlight Control Relay	(BE–21)
	3. Daytime Running Light Relay	(BE–23)
	4. Dimmer Switch	(BE–21)
	5. Headlight Dimmer Relay	(BE–22)
	6. Daytime Running Light No.4 Relay	(BE–24)
	7. Daytime Resistor	(BE–25)
	8. Light Control Switch	(BE–21)
	9. Wire Harness	
Taillight does not light up (Headlight is normal)	1. Taillight Bulb	
	2. TAIL Fuse	(BE–11)
	3. Taillight Control Relay	(BE–22)
	4. Daytime Running Light Relay	(BE–23)
	5. Light Control Switch	(BE–21)
	6. Integration Relay	(BE–55)
	7. Wire Harness	
Headlight and Taillight does not light up	1. Bulbs	
	2. TAIL Fuse	(BE–11)
	3. Headlight Control Relay	(BE–21)
	4. Taillight Control Relay	(BE–22)
	5. Daytime Running Light Relay	(BE–23)
	6. Dimmer Switch	(BE–21)
	7. Headlight Dimmer Relay	(BE–22)
	8. Light Control Switch	(BE–21)
	9. Daytime Running Light No.4 Relay	(BE–24)
	10. Daytime Resistor	(BE–25)
	11. Integration Relay	(BE–55)
	12. Wire Harness	
Only one light comes on	1. Bulbs	
	2. Wire Harness	
”Lo–Beam” does not light up	1. Headlight Bulb	
	2. HEAD Fuse	(BE–11)
	3. Headlight Dimmer Relay	(BE–22)
	4. Dimmer Switch	(BE–21)
	5. Daytime Running Light Relay	(BE–23)
	6. Daytime Running Light No.4 Relay	(BE–24)
	7. Daytime Resistor	(BE–25)
	8. Wire Harness	
”Hi–Beam” does not light up	1. Headlight Bulb	
	2. HEAD Fuse	(BE–11)
	3. Headlight Dimmer Relay	(BE–22)
	4. Dimmer Switch	(BE–21)
	5. Daytime Running Light Relay	(BE–23)
	6. Daytime Running Light No.4 Relay	(BE–24)
	7. Daytime Resistor	(BE–25)
	8. Wire Harness	

Trouble	Parts name	(See page)
”Flash” does not light up	1. Headlight Bulb	
	2. HEAD Fuse	(BE–11)
	3. Headlight Dimmer Relay	(BE–22)
	4. Dimmer Switch	(BE–21)
	5. Daytime Running Light Relay	(BE–22)
	6. Daytime Running Light No.4 Relay	(BE–24)
	7. Daytime Resistor	(BE–25)
	8. Wire Harness	
Only one Taillight goes out or does not light up	1. Taillight Bulb	
	2. Wire Harness	
Rear Combination light does not light up	1. Taillight Bulb	
	2. TAIL Fuse	(BE–11)
	3. Taillight Control Relay	(BE–22)
	4. Wire Harness	
Daytime Running Light system does not operate	1. DOME Fuse	
	2. GAUGE Fuse	(BE–11)
	3. IGN Fuse	(BE–11)
	4. HEAD Fuse	(BE–11)
	5. TAIL Fuse	(BE–11)
	6. Headlight Control Relay	(BE–21)
	7. Taillight Control Relay	(BE–22)
	8. Dimmer Relay	(BE–21)
	9. Ignition Switch	(BE–12)
	10. Light Control/ Dimmer Switch	(BE–21)
	11. Wire Harness	

HEADLIGHT AIMING ADJUSTMENT

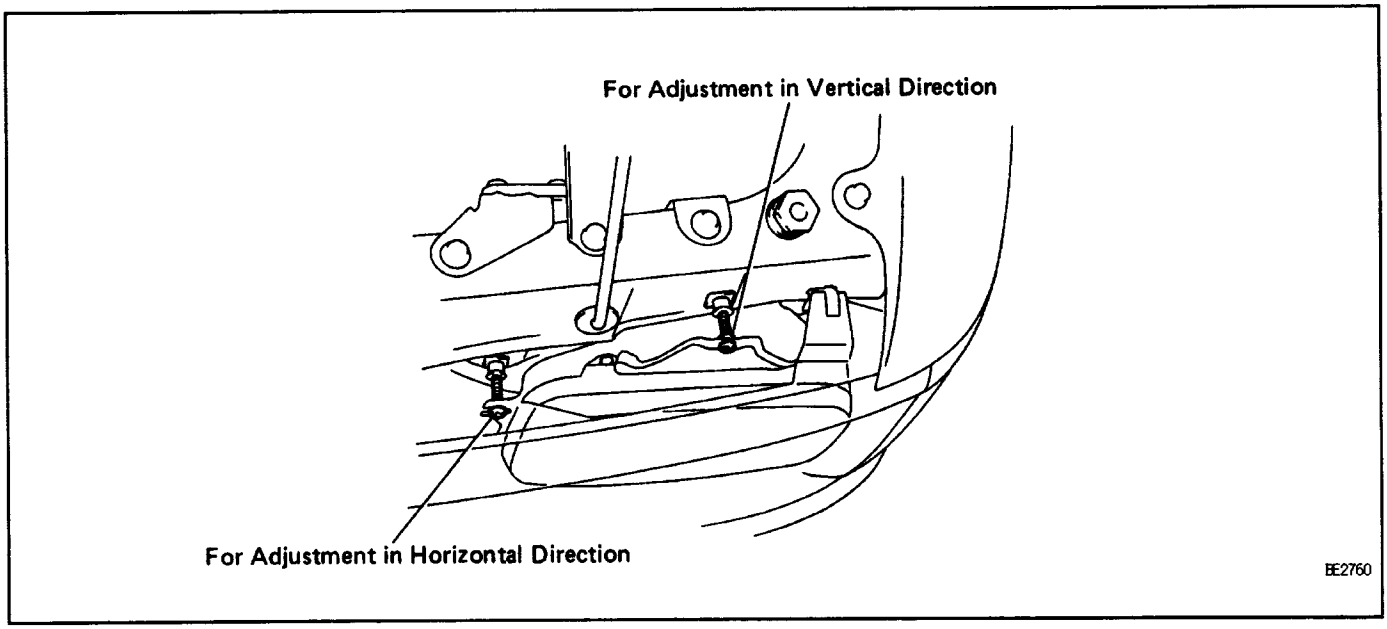

COMPONENTS

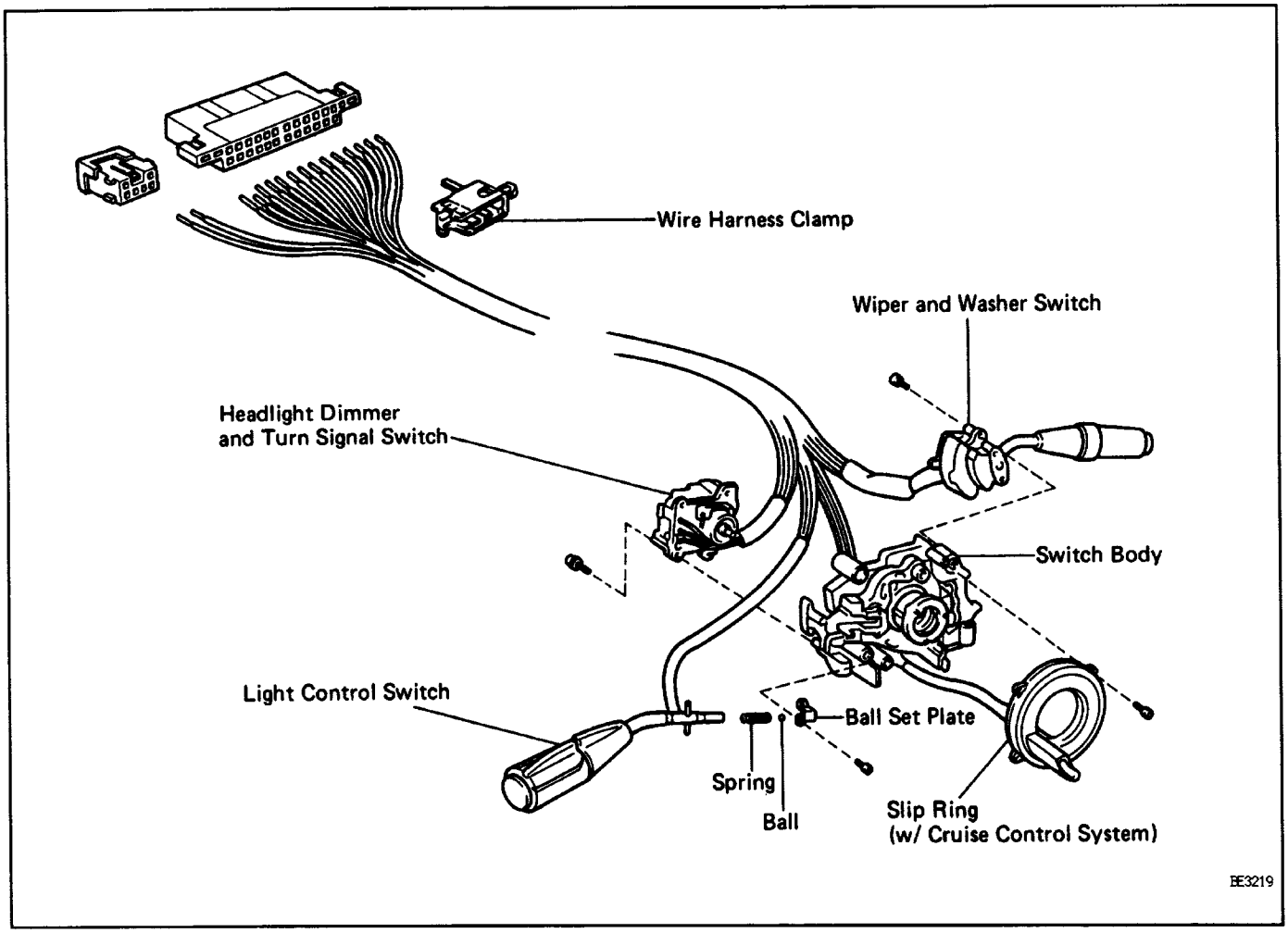

COMBINATION SWITCH DISASSEMBLY

NOTICE: w/ Cruise Control System

To prevent damage to the slip ring when removing the steering wheel, be careful of the following points.

- **Keep the steering wheel In the ”straight–ahead” steering position.**
- **Do not let the steering wheel strongly interfere with the connector part of the slip ring.**

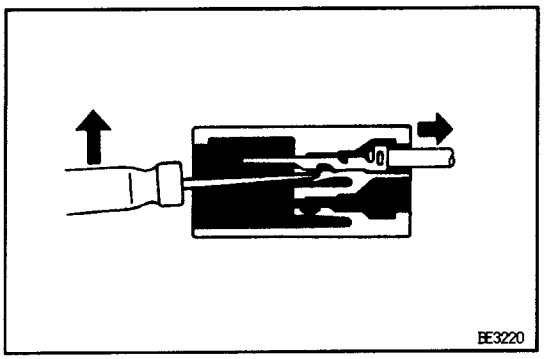

1. REMOVE WIRE HARNESS CLAMP FROM WIRE HARNESS

2. REMOVE TERMINALS FROM CONNECTOR

(a) From the open end, insert a miniature screwdriver between the locking lug and terminal.

(b) Pry down the locking lug with the screwdriver and pull the terminal out from the rear.

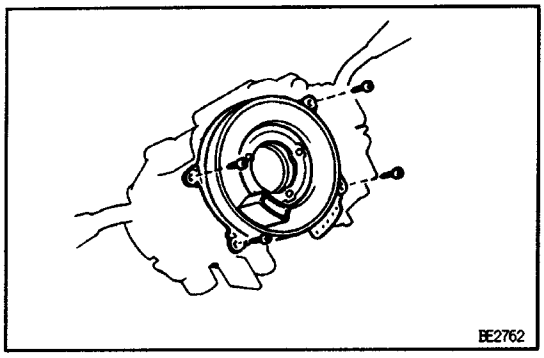

3. w/ Cruise Control System:

REMOVE SLIP RING

Remove the 4 screws and the slip ring from the switch body.

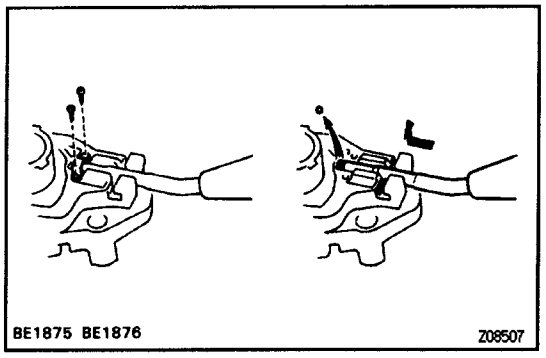

4. REMOVE LIGHT CONTROL SWITCH

(a) Remove the 2 screws and the ball set plate from the switch body.

(b) Remove the ball and slide out the switch from the switch body with the spring.

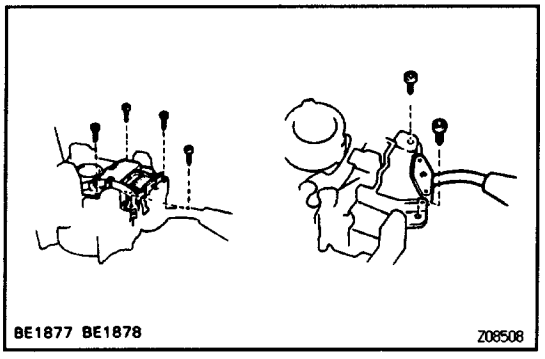

5. REMOVE HEADLIGHT DIMMER AND TURN SIGNAL SWITCH

Remove the 4 screws and the switch from the switch body.

6. REMOVE WIPER AND WASHER SWITCH

Remove the 2 screws and the switch from the switch body.

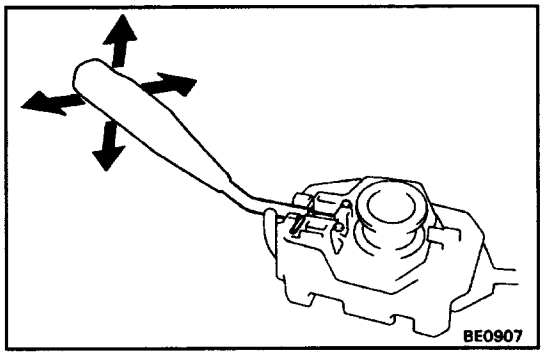

COMBINATION SWITCH ASSEMBLY

INSTALL PARTS OF COMBINATION SWITCH IN REVERSE SEQUENCE OF REMOVAL

HINT:

- After installing the light control switch to the switch body, ensure that the switch operation is smoothly.

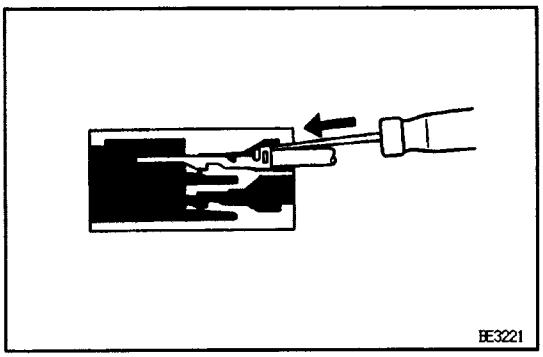

- Push in the terminal until it is securely locked in the connector lug.

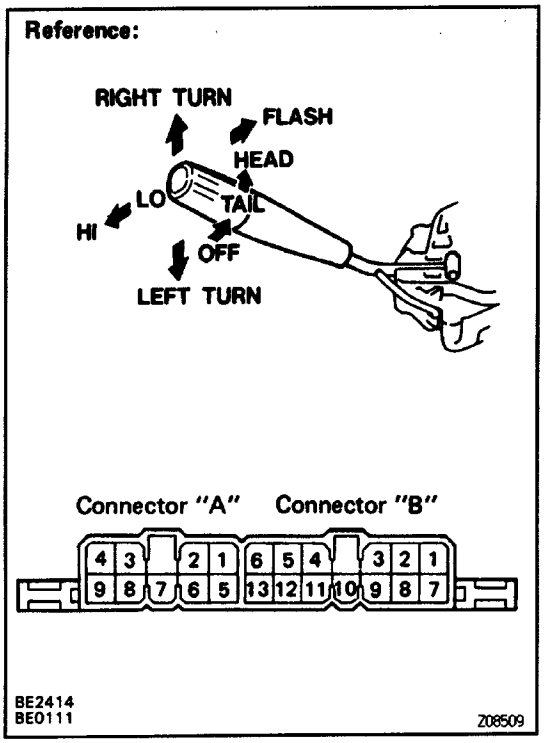

COMBINATION SWITCH INSPECTION

1. INSPECT LIGHT CONTROL SWITCH CONTINUITY

Switch position	Tester connection to terminal number	Specified condition
OFF	–	No continuity
TAIL	**B10 – B11**	Continuity
HEAD	**B10 – B11 – B4**	Continuity

If continuity is not as specified, replace the switch.

2. INSPECT HEADLIGHT DIMMER SWITCH CONTINUITY

Switch position	Tester connection to terminal number	Specified condition
Low beam	**B6 – B13**	Continuity
High beam	**B5 – B13**	Continuity
Flash	**B5 – B12 – B13**	Continuity

If continuity is not as specified, replace the switch.

TURN SIGNAL SWITCH INSPECTION

INSPECT TURN SIGNAL SWITCH CONTINUITY

Switch position	Tester connection to terminal number	Specified condition
Left turn	**B3 – B9**	Continuity
Neutral	–	No continuity
Right turn	**B3 – B8**	Continuity

If continuity is not as specified, replace the switch.

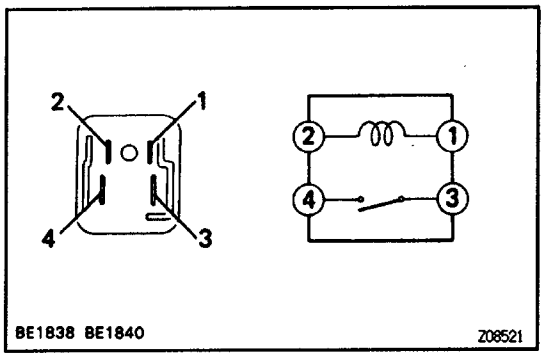

HEADLIGHT CONTROL RELAY INSPECTION

INSPECT HEADLIGHT CONTROL RELAY CONTINUITY

Condition	Tester connection to terminal number	Specified condition
Constant	**1 – 2**	Continuity
Apply B + between terminals 1 and 2.	**3 – 4**	Continuity

If continuity is not as specified, replace the relay.

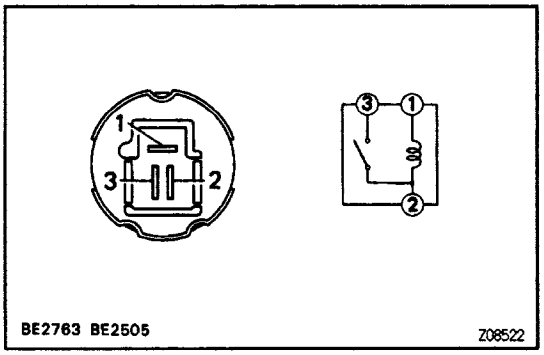

TAILLIGHT CONTROL RELAY INSPECTION

INSPECT TAILLIGHT CONTROL RELAY CONTINUITY

Condition	Tester connection to terminal number	Specified condition
Constant	**1 – 2**	**Continuity**
Apply B+ between terminals 1 and 2.	**2 – 3**	**Continuity**

If continuity is not as specified, replace the relay.

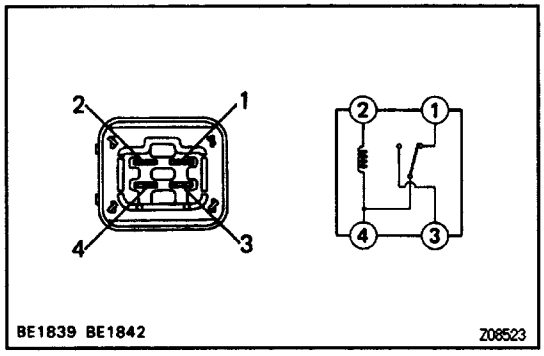

HEADLIGHT DIMMER RELAY INSPECTION

INSPECT HEADLIGHT DIMMER RELAY CONTINUITY

Condition	Tester connection to terminal number	Specified condition
Constant	**1 – 4** **2 – 4**	**Continuity**
Apply B+ between terminals 2 and 4.	**3 – 4**	**Continuity**

If continuity is not as specified, replace the relay.

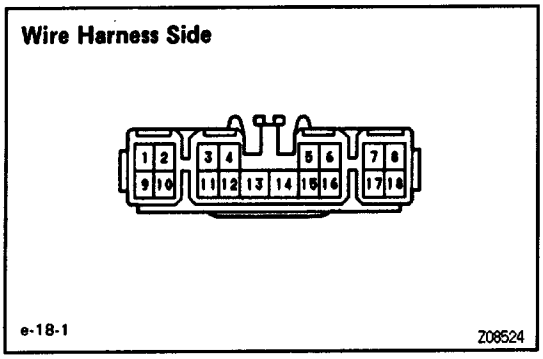

DAYTIME RUNNING LIGHT RELAY INSPECTION

INSPECT DAYTIME RUNNING LIGHT RELAY CIRCUIT

Disconnect the connector from the relay and inspect the connector on the wire harness side, as shown in the chart.

Tester connection to terminal number	Condition	Specified condition
5 – Ground	Light control switch position OFF or TAIL	**No continuity**
5 – Ground	Light control switch position HEAD	**Continuity**
7 – Ground	Headlight dimmer switch position Low beam or High beam	**No continuity**
7 – Ground	Headlight dimmer switch position Flash	**Continuity**
8 – Ground	Parking brake switch position OFF (Parking brake lever released)	**No continuity**
8 – Ground	Parking brake switch position ON (Parking brake lever Pulled up)	**Continuity**
12 – Ground	Constant	**Continuity**
13 – Ground	Constant	**Continuity**
16 – Ground	Headlight dimmer switch position Low beam	**No continuity**
16 – Ground	Headlight dimmer switch position High beam or Flash	**Continuity**
2 – Ground	Ignition switch position LOCK or ACC	**No voltage**
2 – Ground	Ignition switch position ON or START	**Battery positive voltage**
6 – Ground	Constant	**Battery positive voltage**
11 – Ground	Engine Stop	**No voltage**
11 – Ground	Engine Running	**Battery positive voltage**

If circuit is not as specified, perform the inspection on the following page.

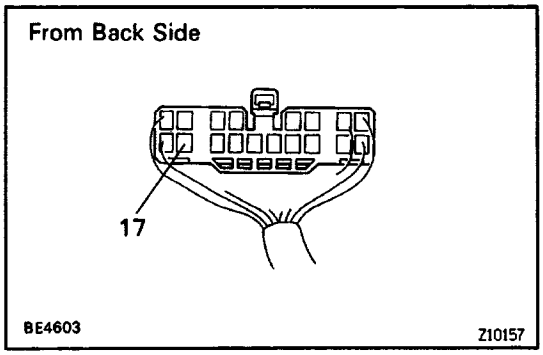

Connector connected

Connect the wire harness side connector to the relay and inspect wire harness side connector from the back side, as shown.

Tester connection to terminal number	Condition	Specified condition
17 – Ground	Headlight dimmer switch position Low beam or High beam	**No voltage**
17 – Ground	Headlight dimmer switch position Flash	**Battery positive voltage**

If circuit is not as specified, replace the relay.

PARKING BRAKE SWITCH INSPECTION

See pegs BE–53

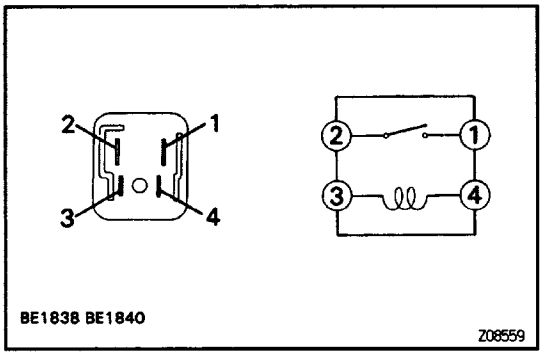

DAYTIME RUNNING LIGHT RELAY NO.4 INSPECTION

INSPECT DAYTIME RUNNING LIGHT RELAY NO.4 CONTINUITY

Condition	Tester connection to terminal number	Specified condition
Constant	**3 – 4**	**Continuity**
Apply B+ between terminals 3 and 4.	**1 – 2**	**Continuity**

If continuity is not as specified, replace the relay.

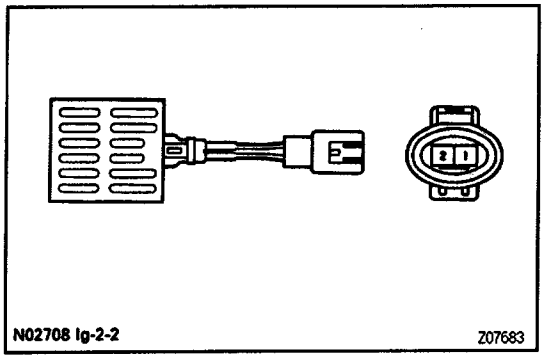

DAYTIME RESISTOR INSPECTION

INSPECT DAYTIME RESISTOR CONTINUITY

Condition	Tester connection to terminal number	Specified condition (resistance)
Constant	1 – 2	Approx. 337mΩ

If continuity is not as specified, replace the resistor.

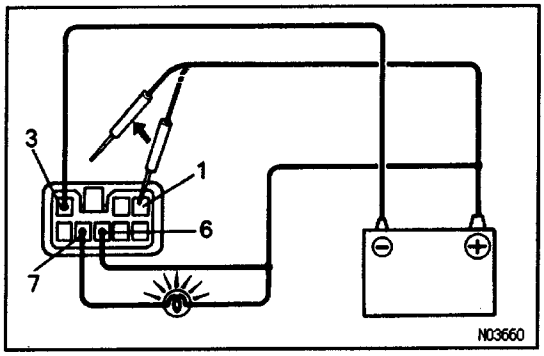

HEADLIGHT RETAINER RELAY INSPECTION

INSPECT HEADLIGHT RETAINER RELAY OPERATION

Headlight Circuit

(a) Connect the positive (+) leads from the battery to terminals 1 and 6, and the negative (–) lead to terminal 3.
(b) Connect the 3.4 W test bulb between terminal 7 and the positive (+) lead from the battery.

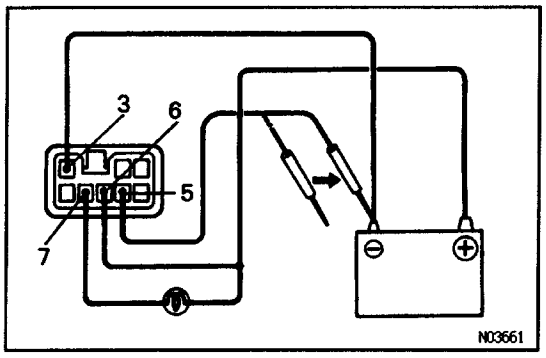

(c) Disconnect the positive (+) lead from terminal 1, check that the test bulb is lighting.
(d) Connect the negative (–) lead to terminal 5, check that the test bulb goes out.
If operation is not as specified, replace the relay.

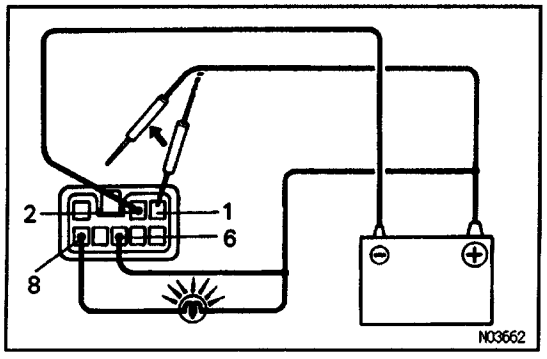

Taillight Circuit

(a) Connect the positive (+) leads from the battery to terminals 1 and 6, and the negative (–) lead to terminal 2.
(b) Connect the 3.4 W test bulb between terminal 8 and the positive (+) lead from the battery.

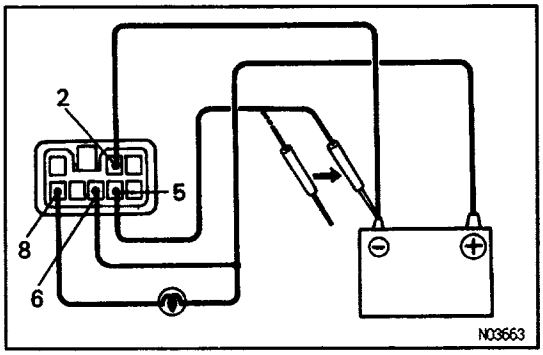

(c) Disconnect the positive (+) lead from terminal 1, check that the test bulb is lighting.
(d) Connect the negative (–) lead to terminal 5, check that the test bulb goes out.
If operation is not as specified, replace the relay.

IGNITION SWITCH

PARTS LOCATION

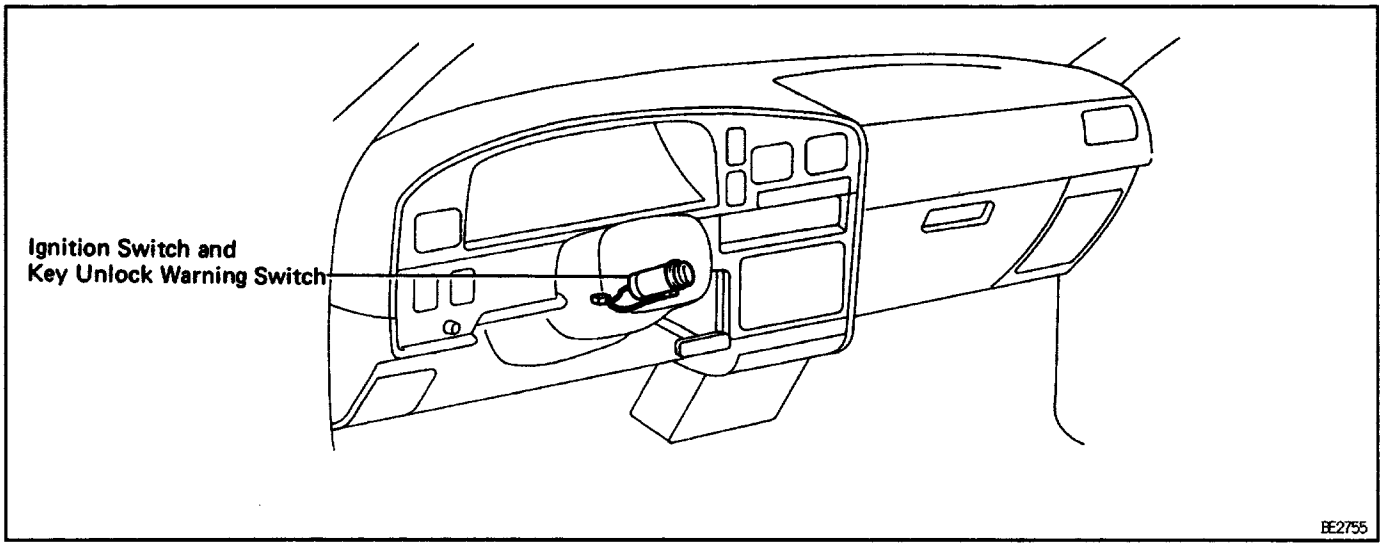

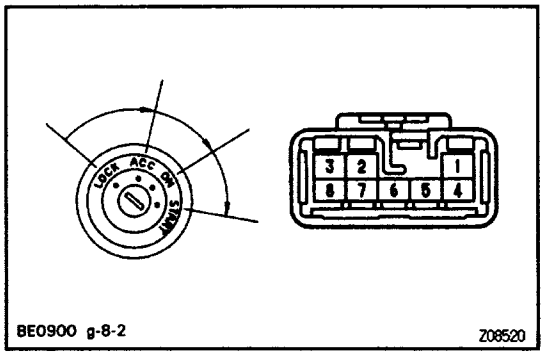

IGNITION SWITCH INSPECTION

INSPECT IGNITION SWITCH CONTINUITY

Switch position	Tester connection to terminal number	Specified condition
LOCK	**–**	**No continuity**
ACC	**2 – 3**	**Continuity**
ON	**1 – 2 – 3** **7 – 8**	**Continuity**
START	**1 – 4 – 6** **7 – 8**	**Continuity**

If continuity is not as specified, replace the switch.

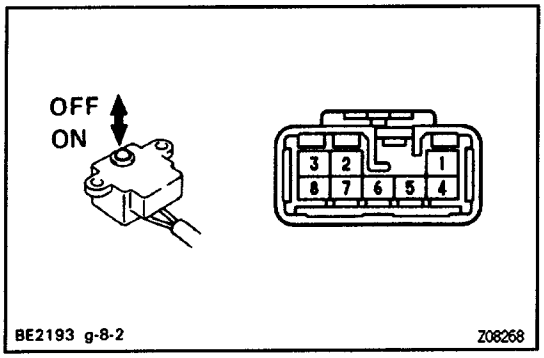

KEY UNLOCK WARNING SWITCH INSPECTION

INSPECT KEY UNLOCK WARNING SWITCH CONTINUITY

Switch position	Tester connection to terminal number	Specified condition
OFF (Key removed)	–	**No continuity**
ON (Key set)	**4 – 5**	**Continuity**

If continuity is not as specified, replace the switch.

DOOR COURTESY SWITCH INSPECTION

See page BE–56

INTEGRATION RELAY INSPECTION

See page BE–55

INTERIOR LIGHT SYSTEM

PARTS LOCATION

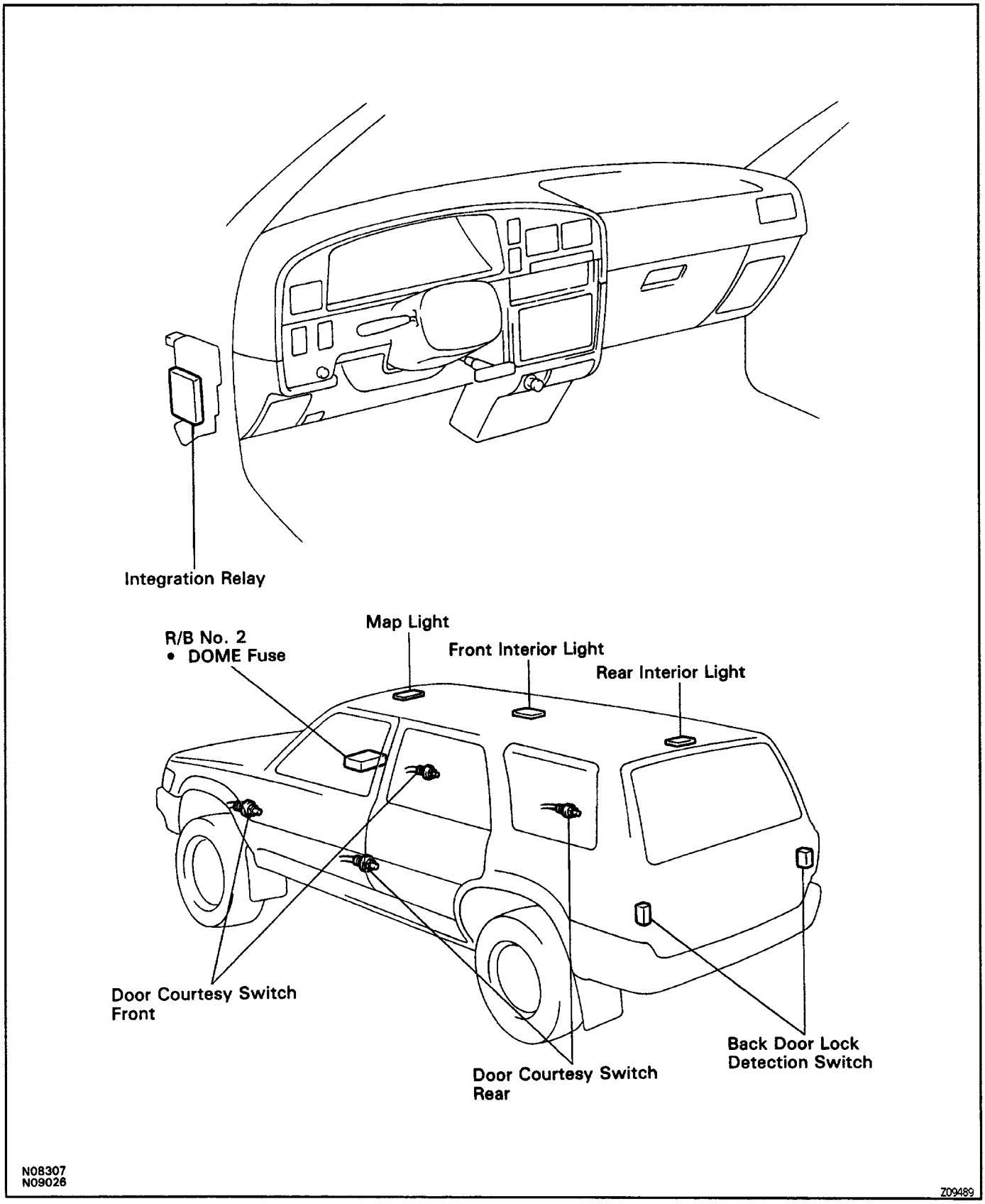

TROUBLESHOOTING

The table below will be useful for you in troubleshooting these electrical problems. The most likely causes of the malfunction are shown in the order of their probability. Inspect each part in the order shown, and replace the part when it is found to be faulty.

Trouble	Parts name	(See page)
Interior light does not light up	1. Bulb	
	2. DOME Fuse	(BE–11)
	3. Front Interior Light Switch	(BE–32)
	4. Rear Interior Light Switch	(BE–32)
	5. Door Courtesy Switch	(BE–56)
	6. Wire Harness	
Interior light remains always on	1. Front Interior Light Switch	(BE–32)
	2. Rear Interior Light Switch	(BE–32)
	3. Door Courtesy Switch	(BE–56)
	4. Wire Harness	

DRIVER'S DOOR COURTESY SWITCH INSPECTION

See combination meter on page BE–66

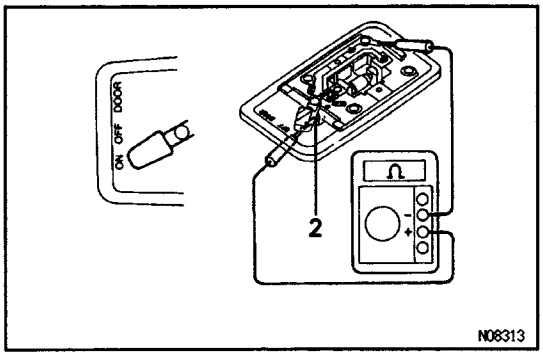

INTERIOR LIGHT ASSEMBLY INSPECTION

1. INSPECT FRONT INTERIOR LIGHT ASSEMBLY

(a) Disconnect the connector from the interior light assembly.

(b) Turn the interior light switch ON, check that the there is continuity between terminal 2 and body ground.

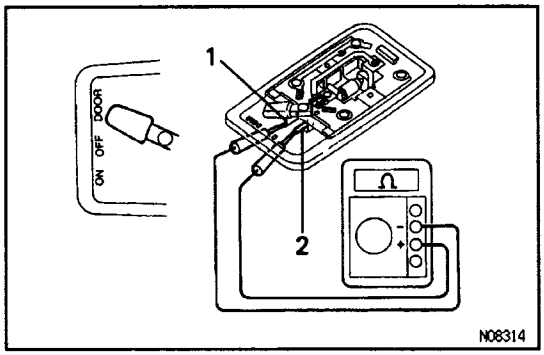

(c) Turn the interior light switch DOOR, check that there is continuity between terminals 1 and 2.
If operation is not as specified, replace the switch.

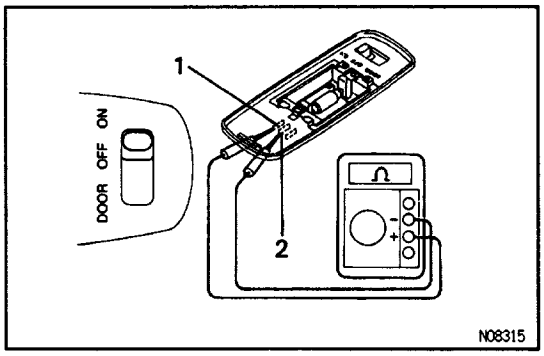

2. INSPECT REAR ROOM LIGHT ASSEMBLY

(a) Disconnect the connector from the interior light assembly.

(b) Turn the interior light switch ON, check that there is continuity between terminal 1 and 2.

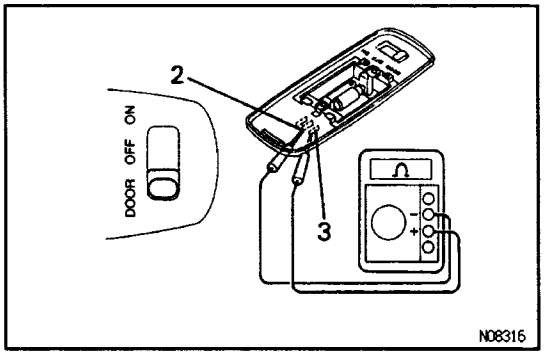

(c) Turn the interior light switch DOOR, check that there is continuity between terminals 2 and 3.
If operation is not as specified, replace the switch.

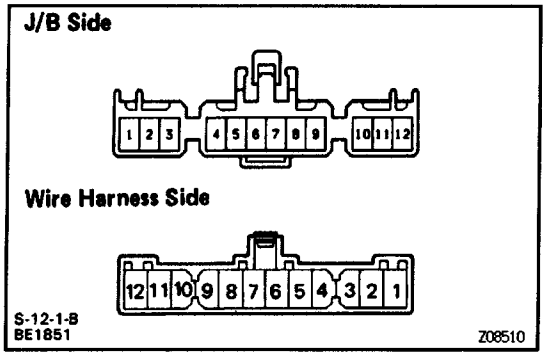

INTEGRATION RELAY INSPECTION

INSPECT INTEGRATION RELAY CIRCUIT

Disconnect the connector from the relay and inspect the connector on the wire harness side and J/B side as shown in the chart.

Wire Harness Side

Tester connection to terminal number	Condition	Specified condition
4 – Ground	Constant	**Continuity**
7 – Ground	Constant	**Continuity**
10 – Ground	Driver's door position Closed (Courtesy switch OFF)	**No continuity**
10 – Ground	Driver's door position Opened (Courtesy switch ON)	**Continuity**

J/B Side

Tester connection to terminal number*	Condition	Specified condition
7 – Ground	**Constant**	**Continuity**
3 – Ground	**Constant**	**Battery positive voltage**
12 – Ground	**Constant**	**Battery positive voltage**

If the circuit is not as specified, replace the relay.

MOON ROOF SYSTEM
PARTS LOCATION

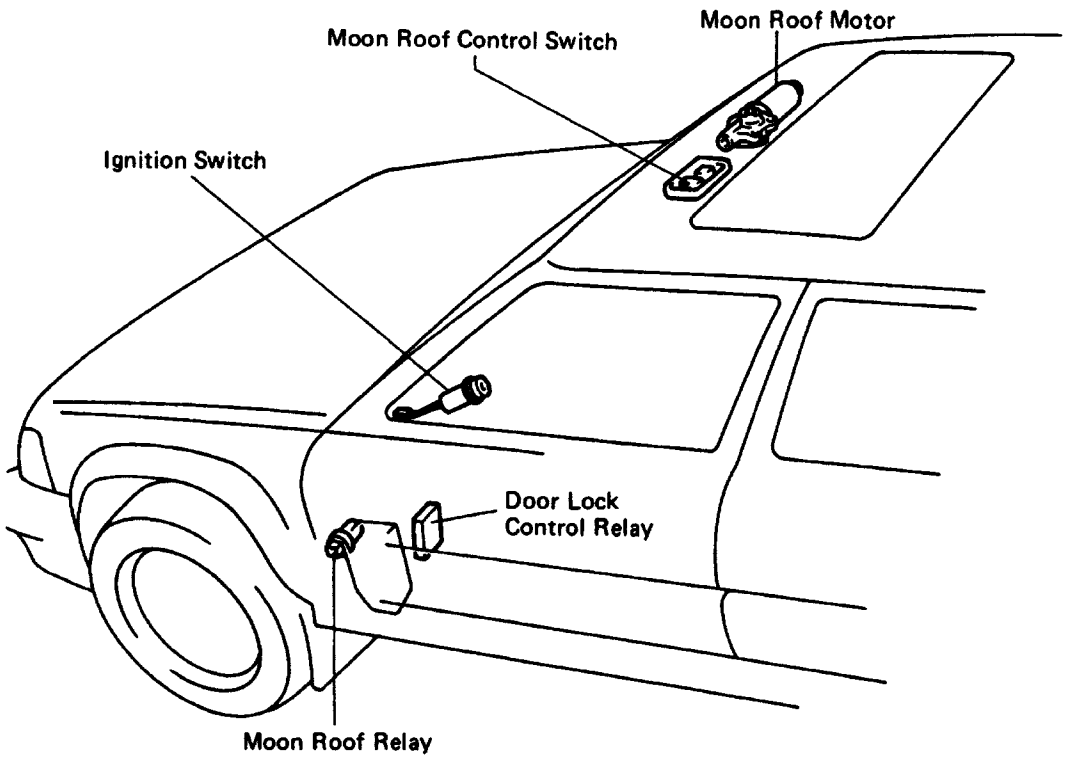

BE3260

TROUBLESHOOTING

The table below will be useful for you in troubleshooting these electrical problems. The most likely causes of the malfunction are shown in the order of their probability. Inspect each part in the order shown, and replace the part when it is found to be faulty.

Trouble	Parts name	(See page)
Moon Roof System does not operate	1. Circuit Breaker OFF	
	2. GAUGE Fuse (w/ Power Window)	(BE–11)
	3. Door Lock Control Relay	(BE–82)
	4. Moon Roof Relay	(BE–86)
	5. Moon Roof Control Switch	(BE–85)
	6. Moon Roof Motor	(BE–86)
	7. Wire Harness	

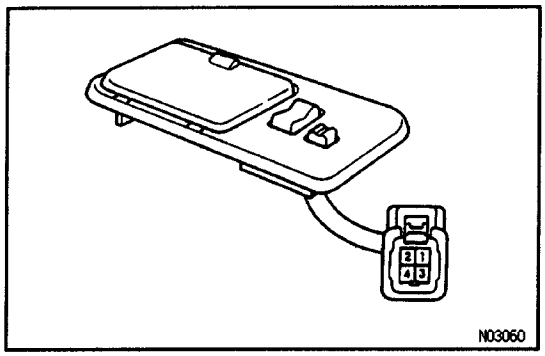

MOON ROOF CONTROL SWITCH INSPECTION

INSPECT MOON ROOF CONTROL SWITCH CONTINUITY

Switch position	Tester connection to terminal number	Specified condition
OPEN	1 – 2 3 – 4	Continuity
OFF	1 – 3 – 4	Continuity
COLSE	1 – 3 2 – 4	Continuity

If continuity is not as specified, replace the switch.

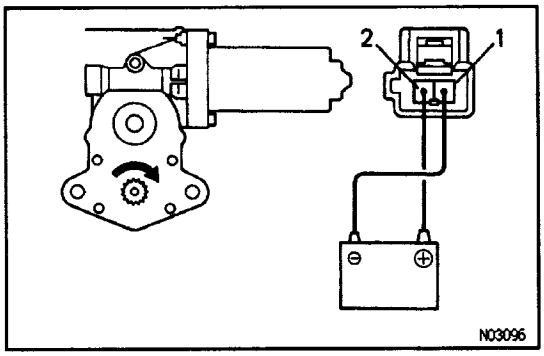

MOON ROOF MOTOR INSPECTION

INSPECT MOON ROOF MOTOR

(a) Connect the positive (+) lead from the battery to terminal 2 and the negative (–) lead to terminal 1 and check that the motor turns clockwise.

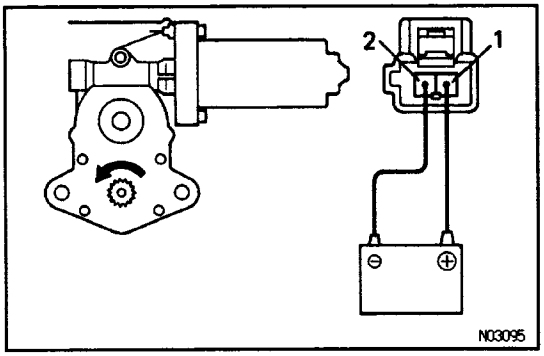

(b) Connect the positive (+) lead from the battery to terminal 1 and the negative (–) lead to terminal 2 and check that the motor turns counterclockwise.
If operation is not as specified, replace the motor.

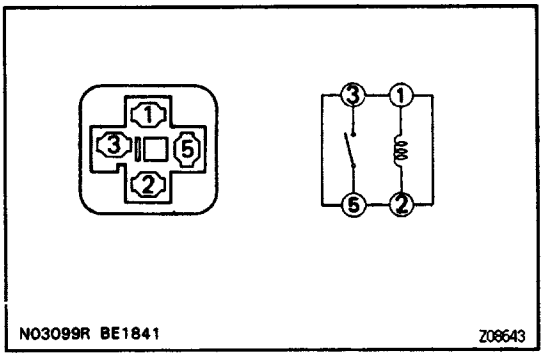

MOON ROOF CONTROL RELAY INSPECTION

INSPECT MOON ROOF CONTROL RELAY CONTINUITY

Condition	Tester connection to terminals number	Specified condition
Constant	**1 – 2**	**Continuity**
Apply B+ between terminal 1 and 2	**3 – 5**	**Continuity**

If continuity is not as specified, replace the relay.

POWER DOOR LOCK CONTROL SYSTEM

PARTS LOCATION

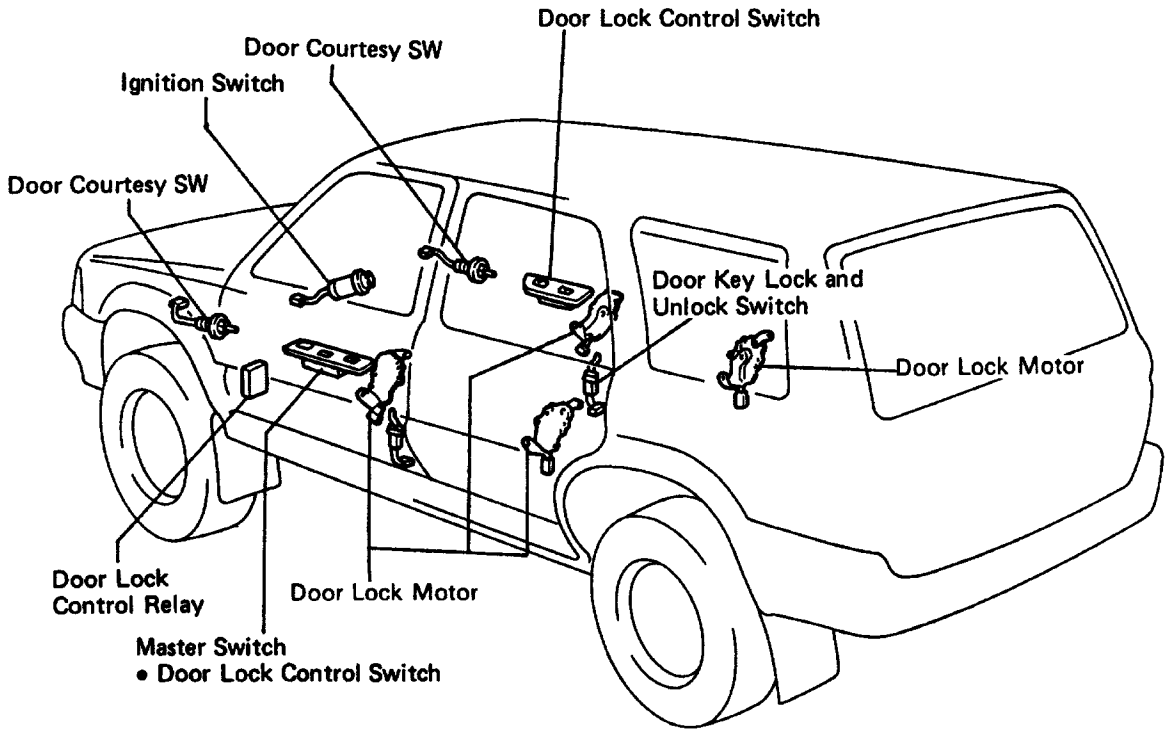

TROUBLESHOOTING

The table below will be useful for you in troubleshooting these electrical problems. The most likely causes of the malfunction are shown in the order of their probability. Inspect each part in the order shown, and replace the part when it is found to be faulty.

Trouble	Parts name	(See page)
Door Lock System does not operate at ail	1. POWER Fuse	(BE–11)
	2. Door Lock Motor	(BE–81)
	3. Door Lock Control Relay	(BE–82)
	4. Wire Harness	
Door Lock System does not operate by Manual Switch	1. Door Lock Manual Switch	(BE–80)
	2. Door Lock Control Relay	(BE–82)
	3. Wire Harness	
Door Lock System does not operate by door key	1. Door Key Lock and Unlock Switch	(BE–81)
	2. Door Lock Control Relay	(BE–82)
	3. Door Lock Link Disconnected	
	4. Wire Harness	
Fault in Key Confine Prevention operation	1. Door Lock Control Relay	(BE–82)
	2. Key Unlock Warning Switch	(BE–13)
	3. Door Courtesy Switch	(BE–56)
	4. Wire Harness	

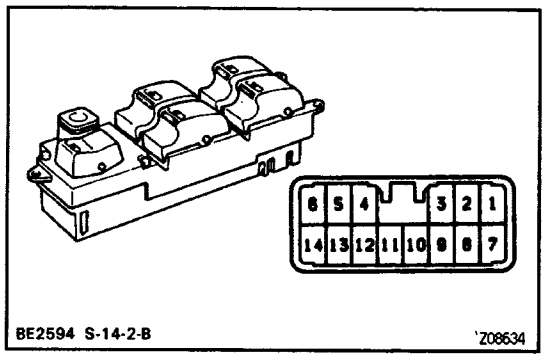

DRIVER'S DOOR LOCK CONTROL SWITCH INSPECTION

INSPECT DRIVER'S DOOR LOCK CONTROL SWITCH CONTINUITY

Master Switch

Switch position	Tester connection to terminal number	Specified condition
LOCK	2 – 4	Continuity
OFF	–	No continuity
UNLOCK	2 – 3	Continuity

If continuity is not as specified, replace the switch.

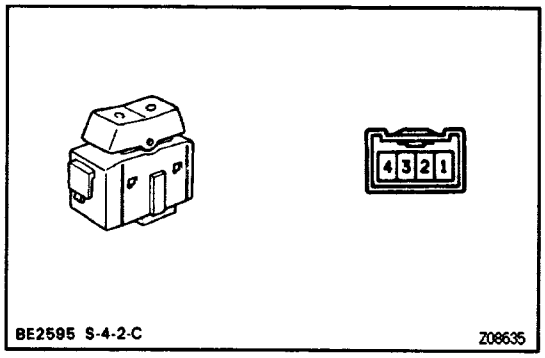

PASSENGER'S DOOR LOCK CONTROL SWITCH INSPECTION

INSPECT PASSENGER'S DOOR LOCK CONTROL SWITCH CONTINUITY

Switch position	Tester connection to terminal number	Specified condition
LOCK	3 – 4	Continuity
OFF	–	No continuity
UNLOCK	2 – 4	Continuity

If continuity is not as specified, replace the switch.

DOOR LOCK MOTOR INSPECTION

INSPECT DOOR LOCK MOTOR OPERATION

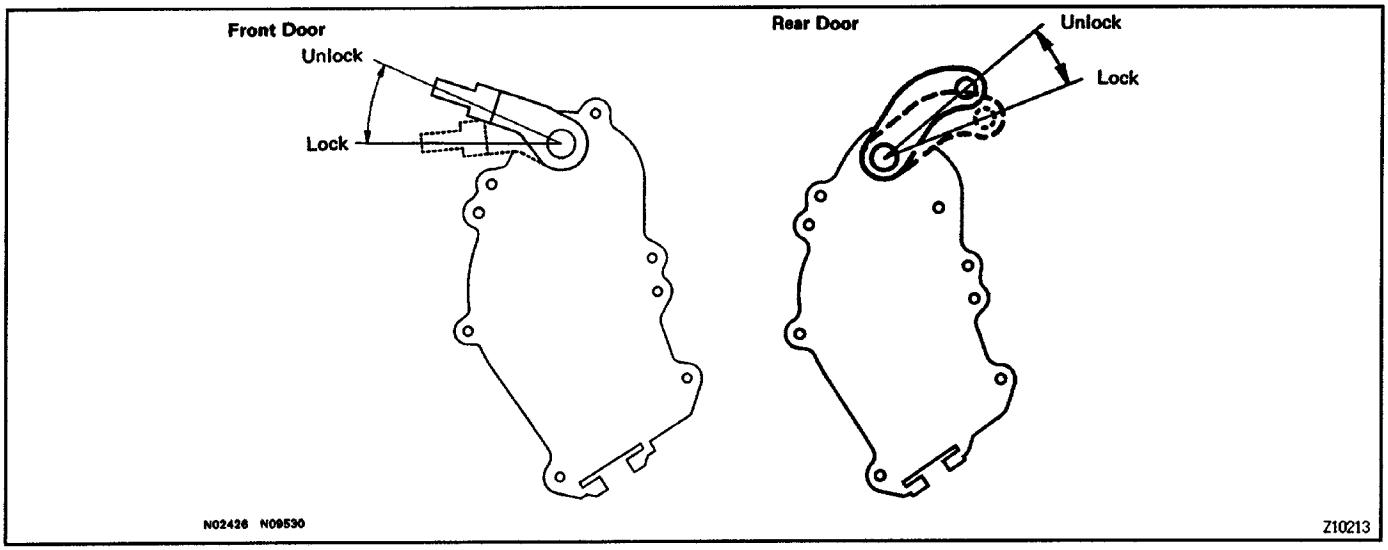

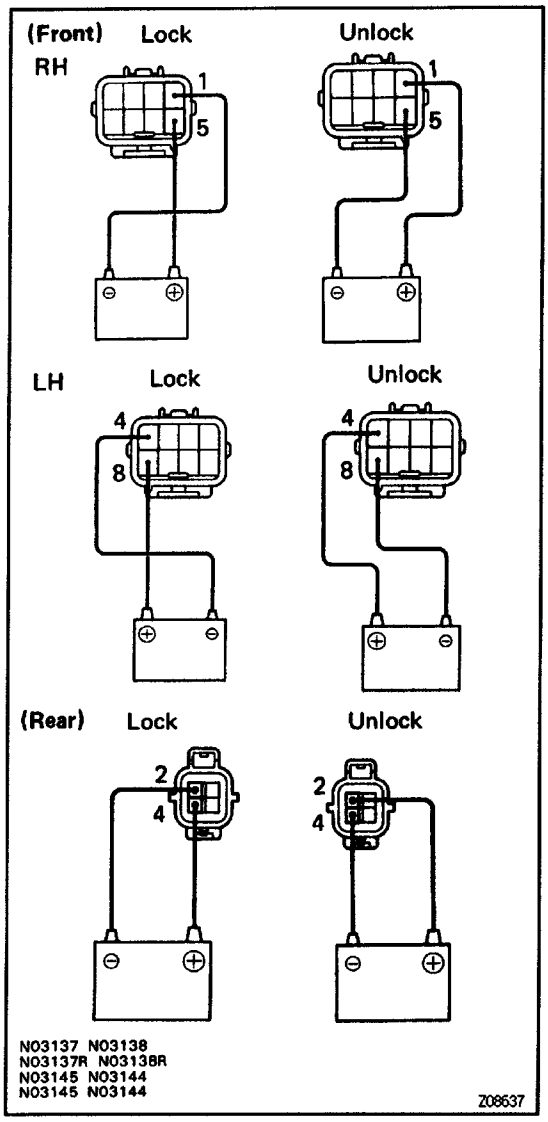

(a) Connect the positive (+) lead from the battery to terminal 1 and the negative (–) lead to terminal 5, check that the door lock link moves to UNLOCK position.

(b) Remove the polarity, check that the door lock link move to LOCK position.
If operation is not as specified, replace the door lock assembly.

(c) Connect the positive (+) lead from the battery to terminal 4 and the negative (–) lead to terminal 8,
check that the door lock link moves to UNLOCK position.

(d) Remove the polarity, check that the door lock link move to LOCK position.
If operation is not as specified, replace the door lock assembly.

(e) Connect the positive (+) lead from the battery to terminal 2 and the negative (–) lead to terminal 4, check that the door lock link moves to UNLOCK position.

(f) Remove the polarity, check that the door lock link move to LOCK position.
If operation is not as specified, replace the door lock assembly.

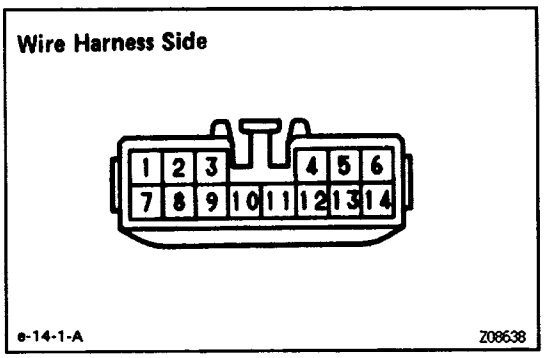

DOOR LOCK CONTROL RELAY INSPECTION

INSPECT DOOR LOCK CONTROL RELAY CIRCUIT

Disconnect the connector from the relay and inspect the connector on the wire harness side, as shown in the chart. If circuit is as specified, inspect the door lock signal and key–off power window signal.

Tester connection to terminal number	Condition	Specified condition
3 – Ground	Door lock control switch or passenger's door key lock and unlock switch position LOCK or OFF	No continuity
3 – Ground	Door lock control switch or passenger's door key lock and unlock switch position UNLOCK	Continuity
4 – Ground	Door lock control switch or door key lock and unlock switch position UNLOCK or OFF	No continuity
4 – Ground	Door lock control switch or door key lock and unlock switch position LOCK	Continuity
7 – Ground	Passenger's door courtesy switch position OFF (Door closed)	No continuity
7 – Ground	Passenger's door courtesy switch position ON (Door opened)	Continuity
9 – Ground	Driver's door lock switch position UNLOCK	Continuity
9 – Ground	Driver's door lock switch position LOCK	No continuity
10 – Ground	Driver's door key lock and unlock switch LOCK or OFF	No continuity
10 – Ground	Driver's door key lock and unlock switch UNLOCK	Continuity
11 – Ground	Constant	Continuity
12 – Ground	Passenger's door lock switch position UNLOCK	Continuity
12 – Ground	Passenger's door lock switch position LOCK	No continuity
14 – Ground	Driver's door courtesy switch position OFF (Door closed)	No continuity
14 – Ground	Driver's door courtesy switch position 4N (Door opened)	Continuity
2 – Ground	Constant	Battery positive voltage
8 – Ground	Ignition switch position LOCK or ACC	No voltage
8 – Ground	Ignition switch position ON	Battery positive voltage
13 – Ground	Key unlock warning switch position OFF (ignition key removed)	No voltage
13 – Ground	Key unlock warning switch position ON (Ignition key set)	Battery positive voltage

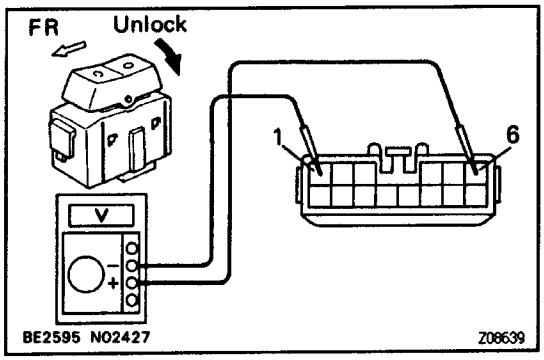

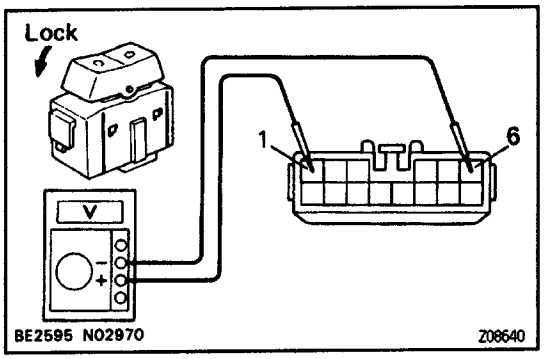

Door Lock Signal

HINT: When the relay circuit is as specified, inspect the door lock signal.

(a) Connect the connector to the relay.
(b) Connect the positive (+) lead from the voltmeter to terminal 1 and the negative (–) lead to terminal 6.
(c) Set the door lock control switch to UNLOCK, check that the voltage rises from 0 volts to battery positive voltage for approximately 0.2 seconds.
(d) Reverse the polarity of the voltmeter leads.
(e) Set the door lock control switch to LOCK, check that the voltage rises from 0 volts to battery positive voltage for approximately 0.2 seconds.

If operation is not as specified, replace the relay.

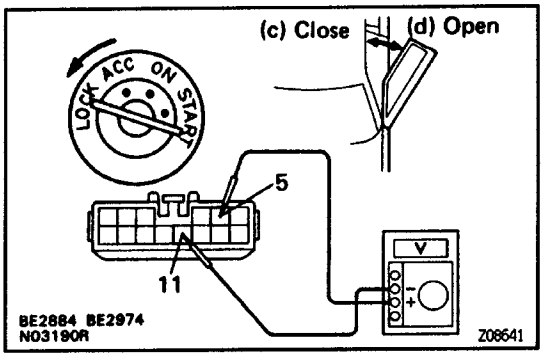

Key–Off Power Window Signal

HINT: When the relay circuit is as specified, inspect the key–off power window signal.

(a) Connect the connector to the relay.
(b) Connect the positive (+) lead from the voltmeter to terminal 5 and the negative (–) lead to terminal 11.
(c) Close the door with ignition switch turned to LOCK or ACC, check that the meter needle indicates battery positive voltage.
(d) Open the door, check that the meter needle indicates 0 volts.

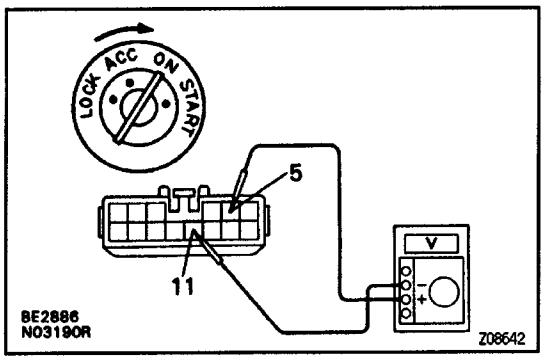

(e) Turn the ignition switch ON, check that the meter needle indicate battery positive voltage again.

If operation is not as specified, replace the relay.

POWER MIRROR CONTROL SYSTEM

PARTS LOCATION

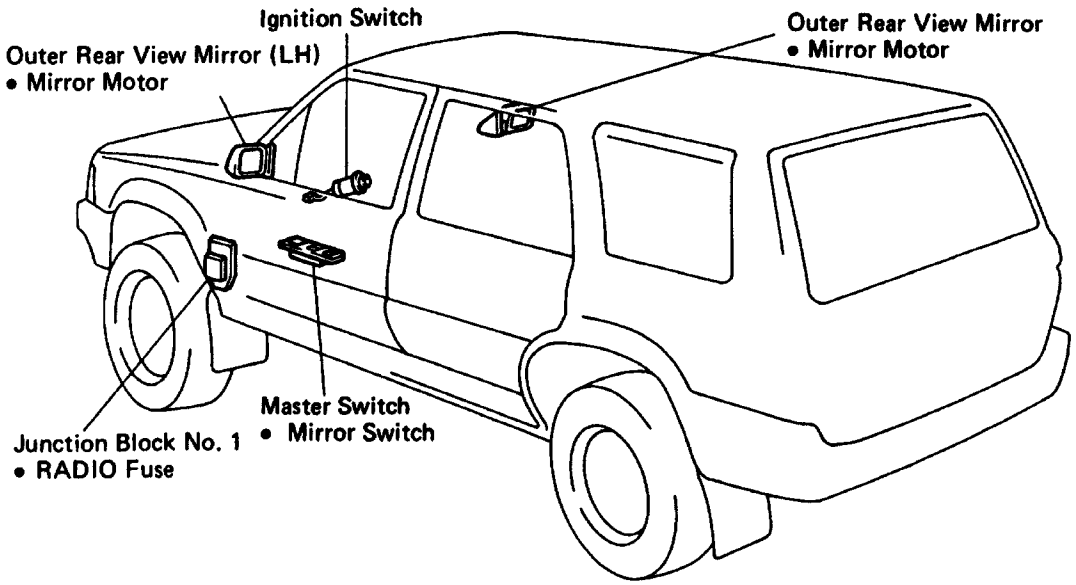

BE3265

TROUBLESHOOTING

The table below will be useful for you in troubleshooting these electrical problems. The most likely causes of the malfunction are shown in the order of their probability. Inspect each part in the order shown, and replace the part when it is found to be faulty.

Trouble	Parts name	(See page)
Remote Control Mirror System does not operate	1. RADIO Fuse	(BE–11)
	2. Mirror Switch	(BE–89)
	3. Mirror Motor	(BE–90)
	4. Wire Harness	

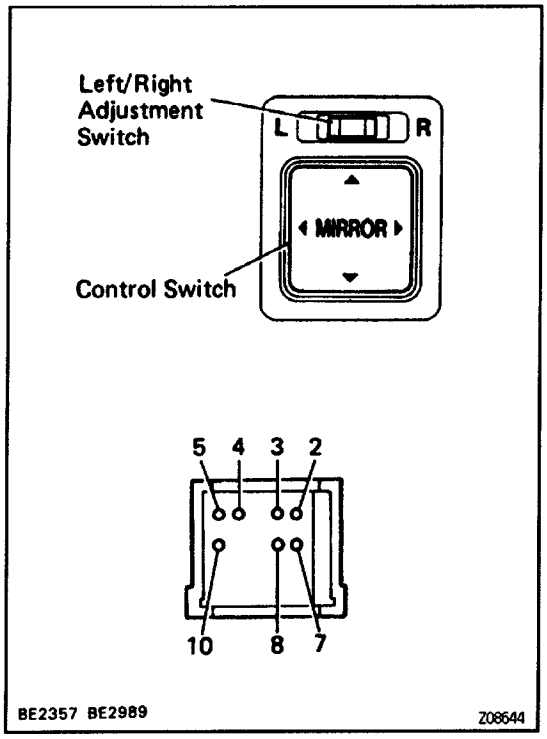

MIRROR SWITCH INSPECTION

INSPECT MIRROR SWITCH CONTINUITY

LEFT SIDE

Switch position	Tester connection to terminal number	Specified condition
OFF	–	No continuity
UP	2 – 10 7 – 8	Continuity
DOWN	2 – 7 8 – 10	Continuity
LEFT	3 – 10 7 – 8	Continuity
RIGHT	3 – 7 8 – 10	Continuity

OFF

Switch position	Tester connection to terminal number	Specified condition
OFF	–	No continuity
UP	7 – 8	Continuity
DOWN	8 – 10	Continuity
LEFT	7 – 8	Continuity
RIGHT	8 – 10	Continuity

RIGHT SIDE

Switch position	Tester connection to terminal number	Specified condition
OFF	–	No continuity
UP	5 – 10 7 – 8	Continuity
DOWN	5 – 7 8 – 10	Continuity
LEFT	4 – 10 7 – 8	Continuity
RIGHT	4 – 7 8 – 10	Continuity

If continuity is not as specified, replace the switch.

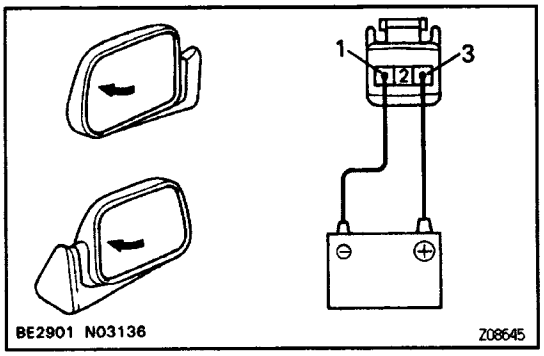

MIRROR MOTOR INSPECTION

INSPECT MIRROR MOTOR

(a) Connect the positive (+) lead from the battery to terminal 3 and negative (–) lead to terminal 1, check that the mirror turns to left side.

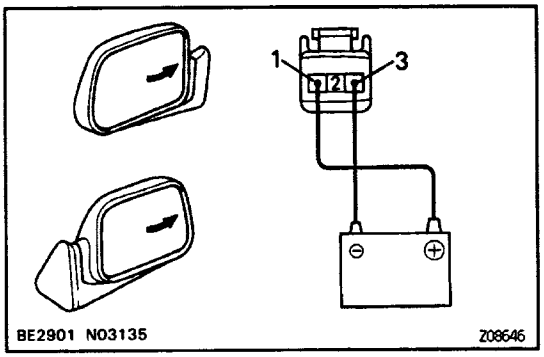

(b) Reverse the polarity, check that the mirror turns to right side.

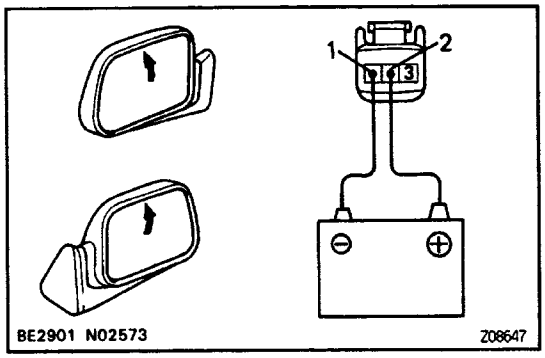

(c) Connect the positive (+) lead from the battery to terminal 2 and the negative (–) lead to terminal 1, check that the mirror turns upward.

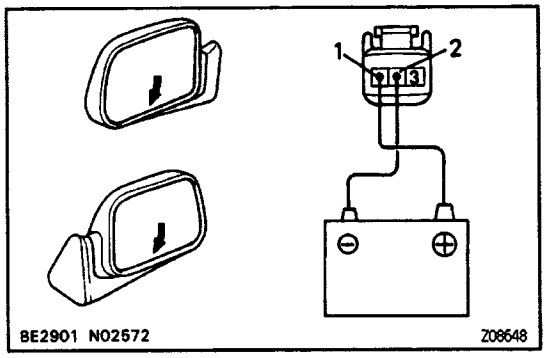

(d) Reverse the polarity, check that the mirror turns downward. If operation is not as specified, replace the mirror assembly.

POWER SOURCE
PARTS LOCATION

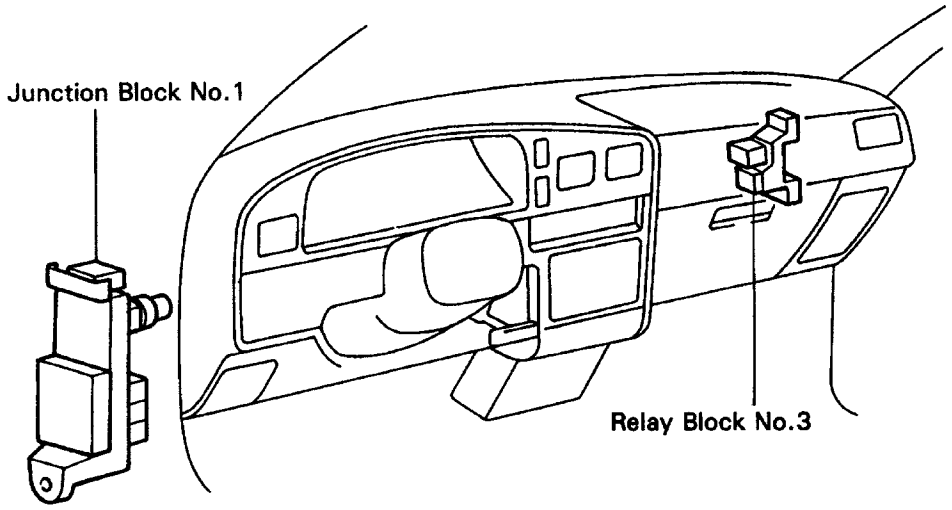

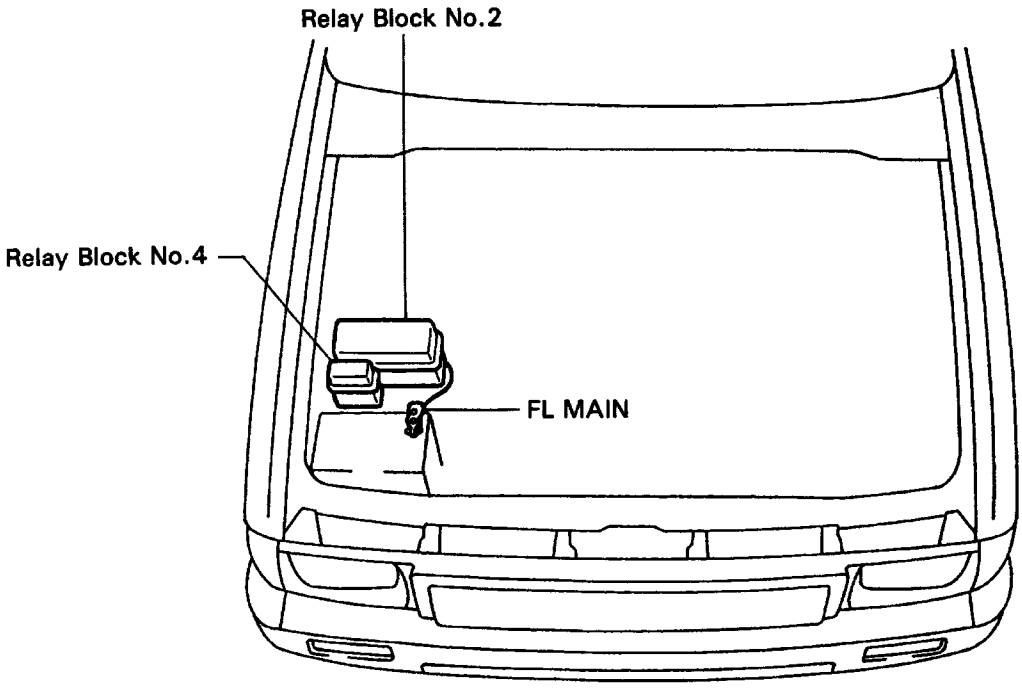

N08295
N09023

Z09486

Junction Block No.1

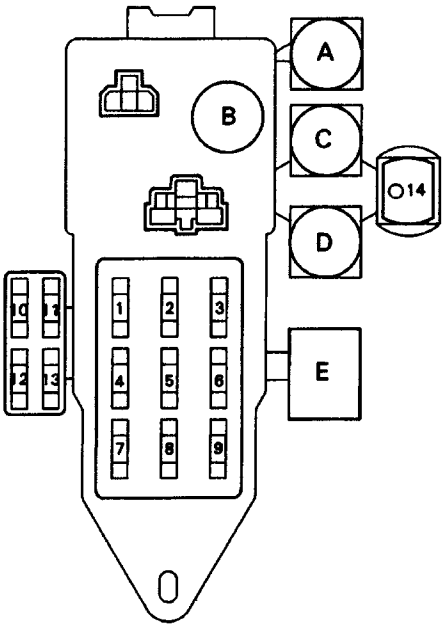

Fuses

1.	ENGINE	10A
2.	IGN	7.5A
3.	TAIL	15A
4.	WIPER	20A
5.	GAUGE	10A
6.	STOP	15A
7.	RADIO	7.5A
8.	CIG	15A
9.	TURN	10A
10.	RR ANTI LOCK	15A
11.	–	–
12.	ECU-IG	20A
13.	DEFOG	20A
14.	POWER	30A

Relays
A. DRL Relay No.4 (CANADA)
B. Taillight Control Relay
C. Defogger Relay
D. Moon Roof Relay
E. Horn Relay

Relay Block No.2

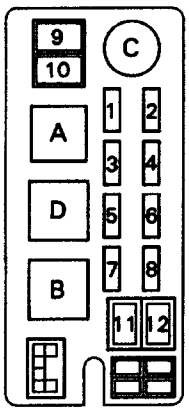

Fuses

1.	–	–
2.	EFI	15A
3.	HAZ-HORN	15A
4.	DOME	15A
5.	HEAD (RH)	10A
6.	HEAD (LH)	10A
7.	–	–
8.	–	–
9.	GEN (H-Fuse)	80A
	(22R-E A/T)	100A
10.	ABS	60 A
11.	AM1 (H-Fuse)	40A
12.	AM2 (H-Fuse)	30A

Relays
B. Starter Relay
C. EFI Relay
D. Headlight Control Relay (CANADA Models)

Fuses

1.	DRL	7.5A
5.	HEAD (LH-LO)	10A
6.	HEAD (RH-LO)	10A
7.	HEAD (RH-HI)	10A
8.	HEAD (LH-HI)	10A

Relays
D. Dimmer Relay

Relay Block No.3

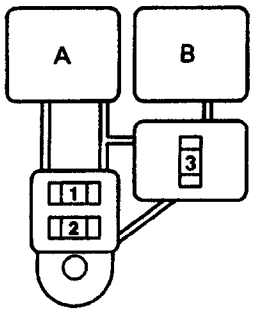

Fuse

1.	A/C	10A
2.	RR HEATER	20A
3.	HEATER	40 A

Relays
A. RR Heater Relay
B. Heater Relay

Relay Block No.4

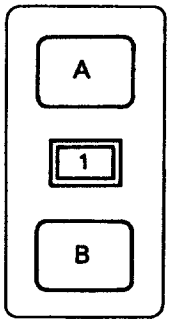

Fuse
1. CDS FAN 30A

Relays
A. CDS FAN No.1 Relay
B. CDS FAN No.2 Relay

N02965 N02966
N03184 N09027

Z09490

POWER WINDOW CONTROL SYSTEM

PARTS LOCATION

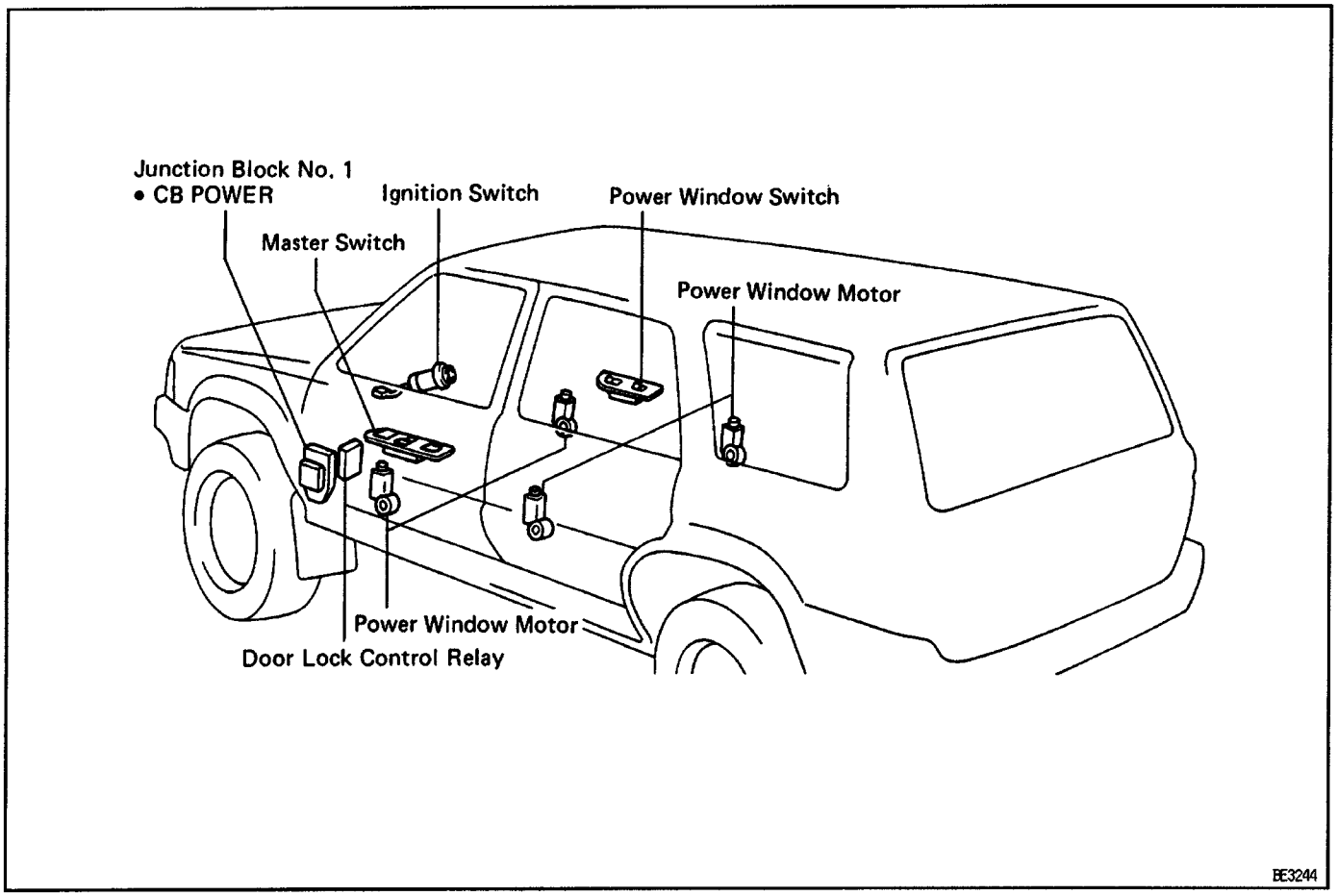

TROUBLESHOOTING

The table below will be useful for you in troubleshooting these electrical problems. The most likely causes of the malfunction are shown in the order of their probability. Inspect each part in the order shown, and replace the part when it is found to be faulty.

Trouble	Parts name	(See page)
Power Window does not operate at all	1. GAUGE Fuse	(BE–11)
	2. Circuit Breaker OFF	
	3. Door Lock Control Relay	(BE–82)
	4. Wire Harness	
One Touch Power window does not operate	1. Power Window Master Switch	(BE–62)
Only one Window does not operate	1. Power Window Switch	(BE–65)
	2. Power Window Motor	(BE–66)
	3. Wire Harness	

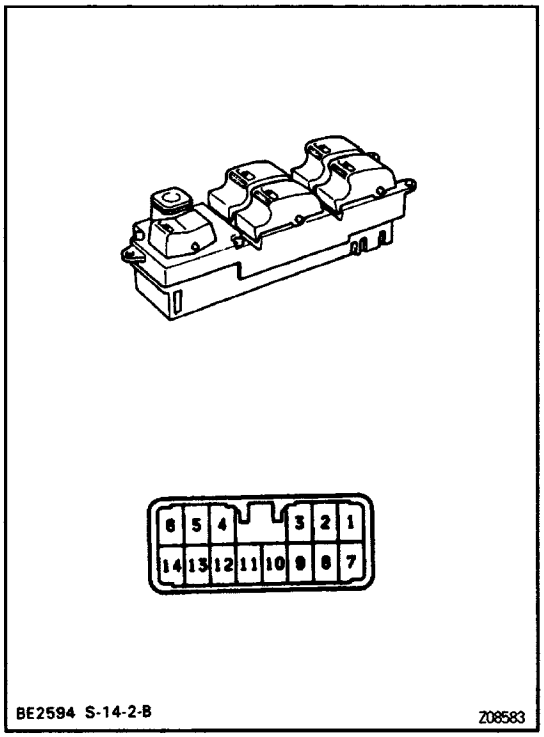

POWER WINDOW MASTER SWITCH INSPECTION

INSPECT POWER WINDOW MASTER SWITCH CONTINUITY

Front Driver's switch (Window unlock)

Switch position	Tester connection to terminal number	Specified condition
UP	6 – 8 2 – 13	Continuity
OFF	2 – 6 – 13	Continuity
DOWN	2 – 6 8 – 13	Continuity

Front Driver's Switch (Window lock)

Switch position	Tester connection to terminal number	Specified condition
UP	6 – 8 2 – 13	Continuity
OFF	2 – 6 – 13	Continuity
DOWN	2 – 6 8 – 13	Continuity

Front Passenger's Switch (Window unlock)

Switch position	Tester connection to terminal number	Specified condition
UP	8 – 12	Continuity
OFF	5 – 12	Continuity
DOWN	5 – 8	Continuity

Front Passenger's Switch (Window lock)

Switch position	Tester connection to terminal number	Specified condition
UP	2 – 5 8 – 12	Continuity
OFF	2 – 5 – 12	Continuity
DOWN	5 – 8 2 – 12	Continuity

Rear Left switch (Window unlock)

Switch position	Tester connection to terminal number	Specified condition
UP	8 – 10	Continuity
OFF	9 – 10	Continuity
DOWN	8 – 9	Continuity

Rear Left Switch (Window lock)

Switch position	Tester connection to terminal number	Specified condition
UP	2 – 9 8 – 10	Continuity
OFF	2 – 9 – 10	Continuity
DOWN	8 – 9 2 – 10	Continuity

Rear Right Switch (Window unlock)

Switch position	Tester connection to terminal number	Specified condition
UP	8 – 11	Continuity
OFF	11 – 14	Continuity
DOWN	8 – 14	Continuity

Rear Right Switch (Window lock)

Switch position	Tester connection to terminal number	Specified condition
UP	8 – 11 2 – 14	Continuity
OFF	2 – 11 – 14	Continuity
DOWN	2 – 11 8 – 14	Continuity

If continuity is not as specified, replace the switch.

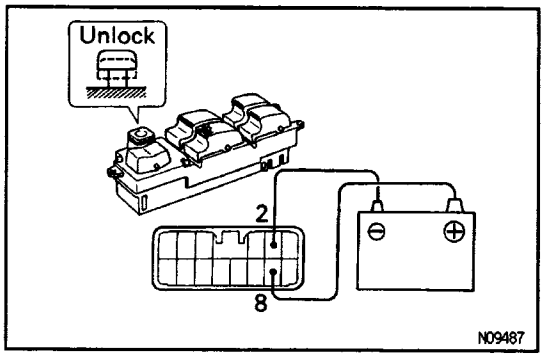

2. INSPECT POWER WINDOW MASTER SWITCH ILLUMINATION

(a) Set the window lock switch to the unlock position.

(b) Connect the positive (+) lead from the battery to terminal 8 and the negative (–) lead to terminal 2, check that all the illuminations light up.

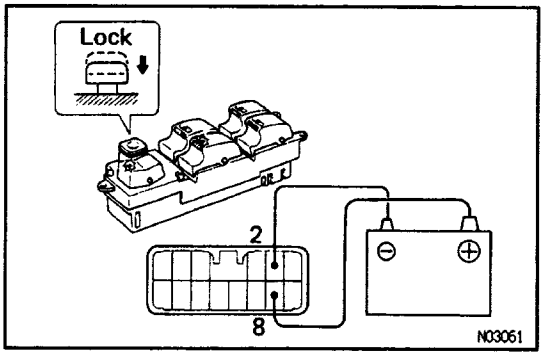

(c) Set the window lock switch to the lock position, check that all the passenger's power window switch illuminations go out.

If operation is not as specified, replace the master switch.

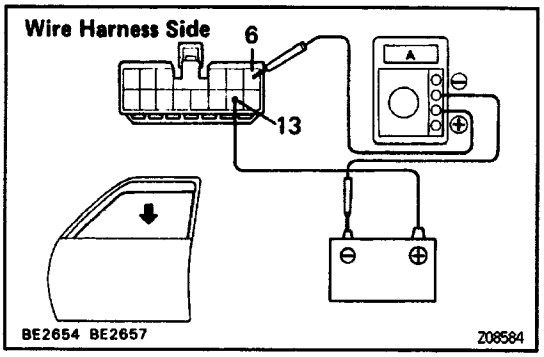

3. INSPECT ONE TOUCH POWER WINDOW SYSTEM

Inspection using an ammeter:

(a) Disconnect the connector from the master switch.

(b) Connect the positive (+) lead from the ammeter to terminal 6 on the wire harness side connector and the negative (–) lead to negative terminal of the battery.

(c) Connect the positive (+) lead from the battery to terminal 13 on the wire harness side connector.

(d) As the window goes down, check that the current increases to approximately 7 amperes.

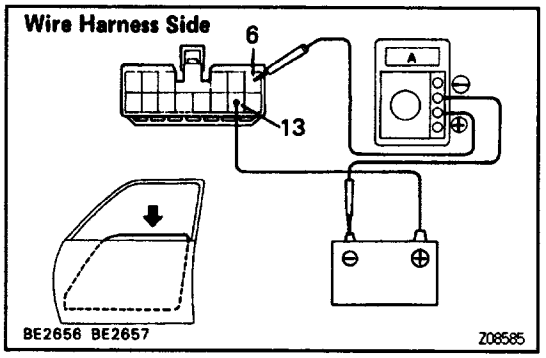

(e) Check that the current increases up to approximately 14.5 amperes or more when the window stops going down.

HINT: The circuit breaker opens some 4 – 40 seconds after the window stops going down, so the check must be made before the circuit breaker operates.

If operation is not as specified, replace the master switch.

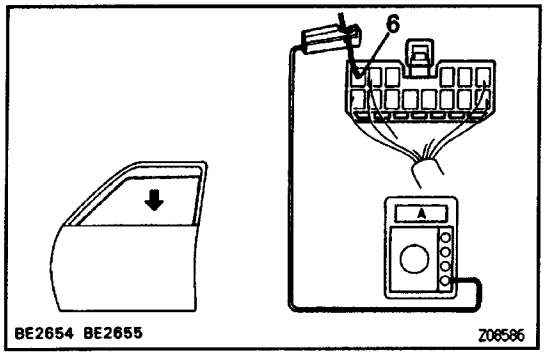

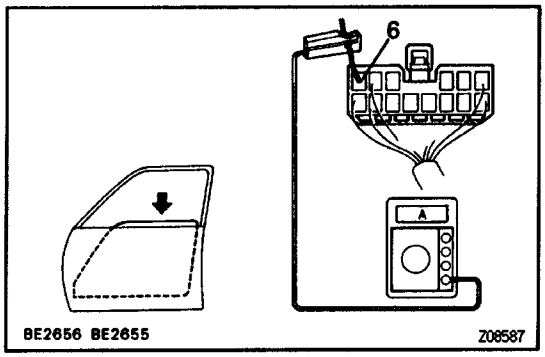

Inspection using an ammeter with a current–measuring probe:

(a) Remove the master switch with connector connected.
(b) Attach a current–measuring probe to terminal 6 of the wire harness.
(e) Turn the ignition switch ON and set the power window switch in the down position.
(d) As the window goes down, check that the current increases to approximately 7 amperes.
(e) Check that the current increases up to approximately 14.5 amperes or more when the window stops going down.

HINT: The circuit breaker opens some 4 – 40 seconds after the window stops going down, so the check must be made before circuit breaker operates.

If operation is not as specified, replace the master switch.

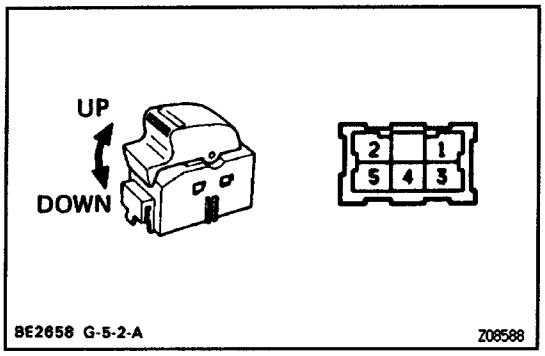

POWER WINDOW SWITCH INSPECTION

INSPECT POWER WINDOW SWITCH CONTINUITY

Switch position	Tester connection to terminal number	Specified condition
UP	**1 – 5** **3 – 4**	**Continuity**
OFF	**1 – 2** **3 – 4**	**Continuity**
DOWN	**1 – 2** **4 – 5**	**Continuity**

If continuity is not as specified, replace the switch.

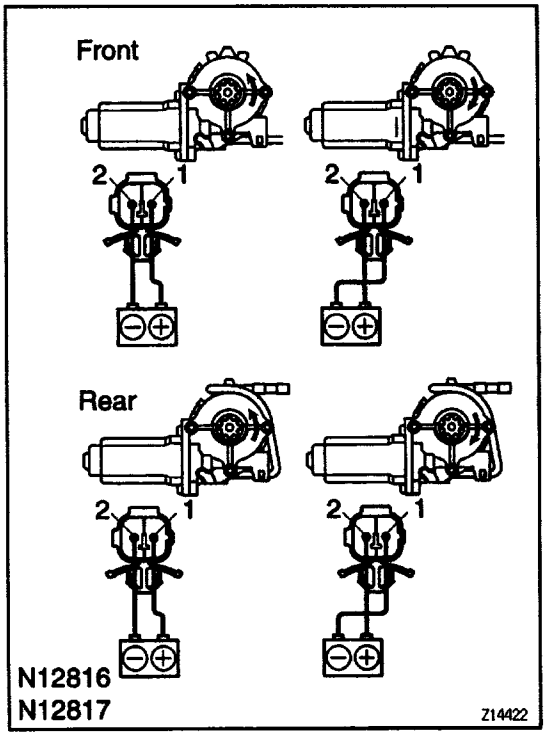

POWER WINDOW MOTOR INSPECTION

1. INSPECT POWER WINDOW MOTOR OPERATION

Left Side Door Motor

(a) Connect the positive (+) lead from the battery to terminal 1 and the negative (–) lead to terminal 2, check that the motor turns counterclockwise.

(b) Reverse the polarity, check that the motor turns clockwise.

If operation is not as specified, replace the motor.

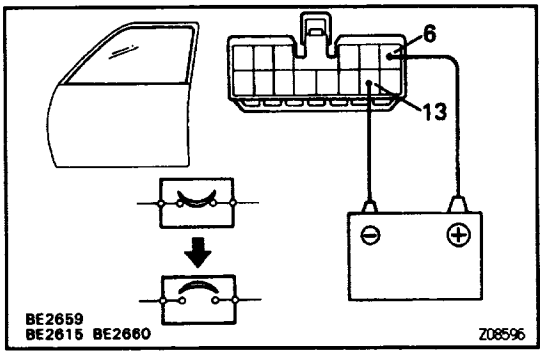

2. INSPECT POWER WINDOW MOTOR CIRCUIT BREAKER OPERATION

Left Side Door Motor/ Driver': Door:

(a) Disconnect the connector from the master switch.

(b) Connect the positive (+) lead from the battery to terminal 6 and the negative (–) lead to terminal 13 on the wire harness side connector, and raise the window to the fully closed position.

(c) Continue to apply voltage, check that there is a circuit breaker operation noise within approximately 4 – 40 seconds.

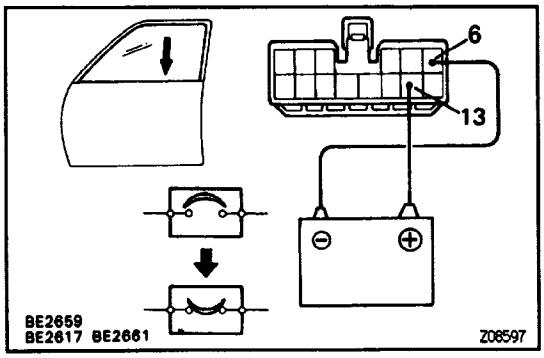

(d) Reverse the polarity, check that the window begins to descend within approximately 60 seconds.

If operation is not as specified, replace the motor.

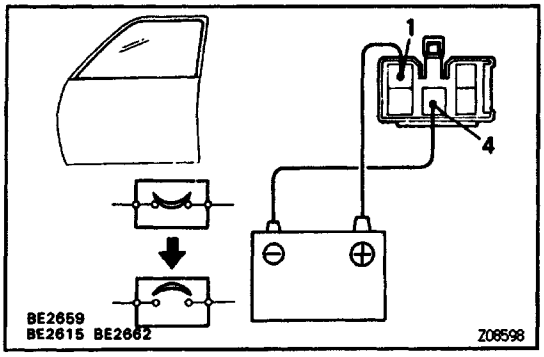

Passenger's Door:

(a) Disconnect the connector from the power window switch.
(b) Connect the positive (+) lead from the battery to terminal 1 and the negative (–) lead to terminal 4 on the wire harness side connector, and raise the window to the fully closed position.
(c) Continue to apply voltage, check there is a circuit breaker operation noise within approximately 4 – 40 seconds.
(d) Reverse the polarity, check that the window begins to descend within approximately 60 seconds.
If operation is not as specified, replace the motor.

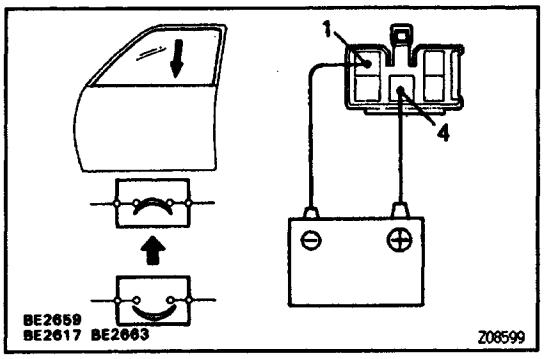

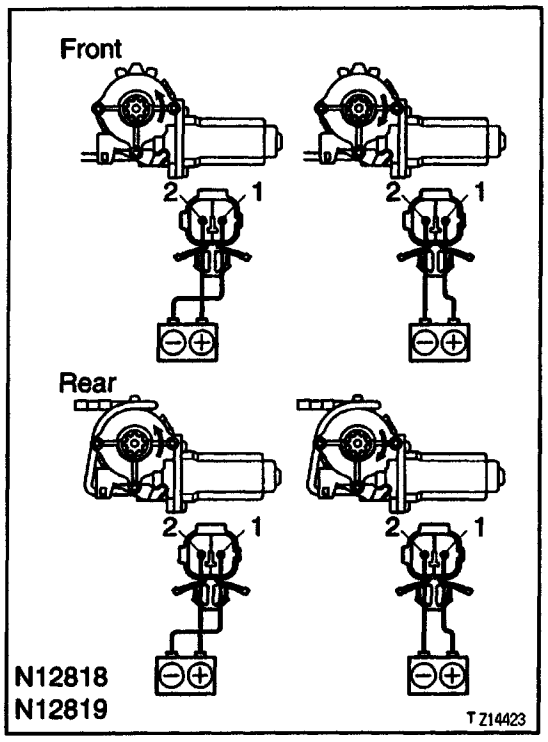

3. INSPECT POWER WINDOW MOTOR OPERATION

Right Side Door Motor

(a) Connect the positive (+) lead from the battery to terminal 2 and the negative (–) lead to terminal 1, check that the motor turns clockwise.
(b) Reverse the polarity, check that the motor turns counterclockwise.
If operation is not as specified, replace the motor.

4. INSPECT POWER WINDOW MOTOR CIRCUIT BREAKER OPERATION

Right Side Door Motor

See Passenger's Door on page BE–67.

POWER DOOR LOCK CONTROL RELAY INSPECTION

See Power Door Lock Control Relay on page BE–82

PRECAUTION

Take care to observe the following precautions when doing inspections or removal and replacement of body electrical related parts.

1. AUDIO SYSTEM

- If the negative (–) cable is disconnected from the battery, the preset AM, FM 1 and FM 2 stations stored in memory are erased, so be sure to note the stations and reset them after the battery terminal is reconnected.
- If the negative (–) cable is disconnected from the battery, the “ANTI –THEFT SYSTEM” will operate when the terminal is reconnected, but the radio, tape player and CD player will not operate. Be sure to input the correct ID number so that the radio, tape player and CD player can be operated again.

2. MOBILE COMMUNICATION SYSTEM

- If the vehicle is equipped with a mobile communication system, refer to precautions in the IN section.

3. LIGHTING SYSTEM

- Halogen bulbs have pressurized gas inside and require special handling.
  They can burst or scatter if scratched or dropped. Hold a bulb only by its plastic or metal case. Don’t touch the glass part of a bulb with bare hands.

PREPARATION

SST (SPECIAL SERVICE TOOLS)

	**09843–18020** Diagnosis Check Wire	

RECOMMENT TOOLS

	**09082–00050** TOYOTA Electrical Tester Set.	

EQUIPMENT

Voltmeter	
Ammeter	
Ohmmeter	
Test lead	
Bulb (3.4 W)	Fuel sender gauge, Seat belt warning relay
Bulb (21 W)	Turn signal flasher relay
Dry cell battery	Fuel sender gauge
Torque wrench	
Masking tape	Rear window defogger wire
Tim foil	Rear window defogger wire

SSM (SPECIAL SERVICE MATERIALS)

Dupont paste No. 4817	–	Rear window defogger wire

SERVICE SPECIFICATIONS

SERVICE DATA

DAYTIME RESISTOR	
Resistance	Approx. 337 mΩ
TURN SIGNAL FLASHER	
Flashes/ Minute	60 – 120
SPEEDOMETER (USING A SPEEDOMETER TESTER)	
Standard indication (km/h)	Allowable range (km/h)
20	(17 – 24)
40	38 – 46
60	57.5 – 67
80	77 – 88
100	96 – 109
120	115 – 130
140	134 – 151.5
160	153 – 173
Standard indication (mph)	Allowable range (mph)
20	18 – 24
40	38 – 44
60	58 – 66
80	78 – 88
100	98 – 110
TACHOMETER (ON–VEHICLE)	DC 13.5 V 25°C (77°F)
Standard indication (RPM)	Allowable range (RPM)
700	630 – 770
3000	2,850 – 3,150
5000	4,850 – 5,150
7000	6,790 – 7,210
FUEL RECEIVER GAUGE	
A – B	Approx. 123 Ω
A – C	Approx. 260 Ω
B – C	Approx. 137 Ω
FUEL SENDER GAUGE	
Float position: F (Approx. 25 mm 0.98 in.)	Approx. 3 Ω
Float position: 1 / 2 (Approx. 76 mm 2.99 in.)	Approx. 32.5 Ω
Float position: E (Approx. 176 mm 6.12 in.)	Approx. 110 Ω
ENGINE COOLANT TEMPERATURE RECEIVER GAUGE	
A – B	Approx. 57 Ω
A – C	Approx. 135 Ω
B – C	Approx. 217 Ω
OIL PRESSURE RECEIVER GAUGE	
Resistance	Approx. 25 Ω
CRUISE CONTROL SWITCH	
Switch position OFF	No continuity
Switch position RESUME/ ACCEL	Approx. 68 Ω
Switch position SET/ COAST	Approx. 198 Ω

Switch position CANCEL	Approx. 418 Ω
VACUUM SWITCH	
Vacuum switch	22.66 ± 4.00 kPa (170 ± 30 mmHg, 6.69 ± 1.18 in.Hg)
VACUUM PUMP	
Vacuum pump 3VZ–E Engine	26.7 kPa (200 mmHg, 7.87 in.Hg)
22R–E Engine	26.7 kPa (200 mmHg, 7.87 in.Hg)
CRUISE CONTROL ACTUATOR	
1 – 3	Approx. 71 Ω
2 – 3	Approx. 38 Ω
Cable stroke	Approx. 36 mm (1.42 in.)

STOP LIGHT SYSTEM

PARTS LOCATION

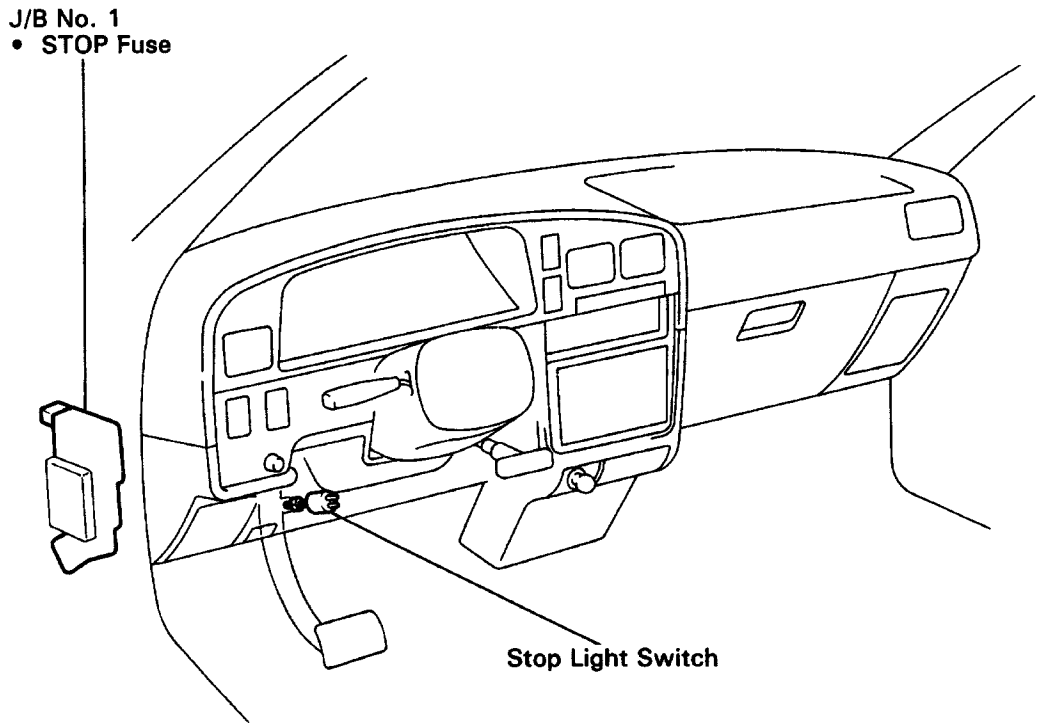

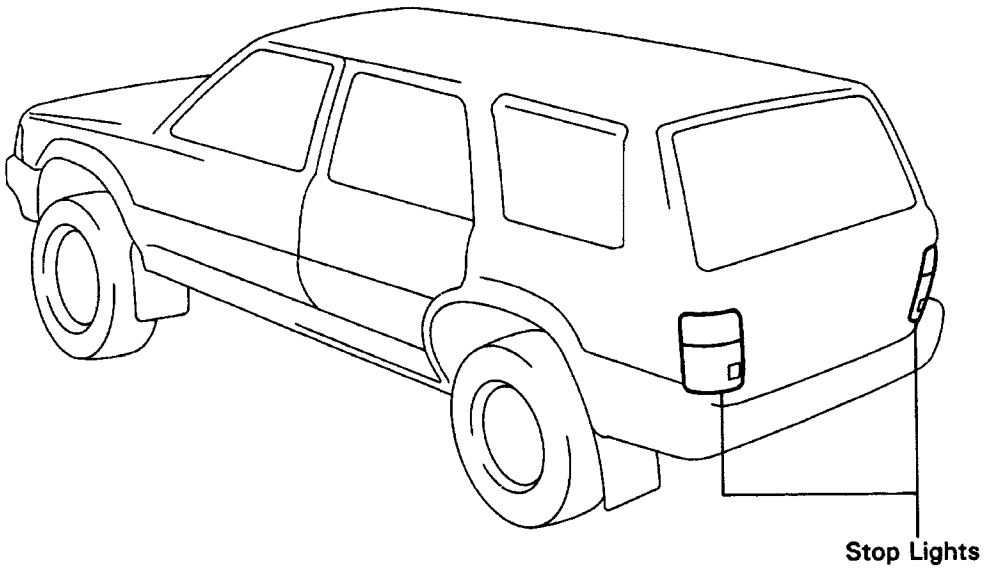

N08309
N08310

Z08545

TROUBLESHOOTING

The table below will be useful for you in troubleshooting these electrical problems. The most likely causes of the malfunction are shown in the order of their probability. Inspect each part in the order shown, and replace the part when it is found to be faulty.

Trouble	Parts name	(See page)
Stop light does not light up	1. STOP Fuse 2. Stop Light Switch 3. Wire Harness 4. Bulb	(BE–11) (BE–35)
Stop light remains always on	1. Stop Light Switch 2. Wire Harness	(BE–35)
Only one light does not light up	1. Wire Harness 2. Bulb	

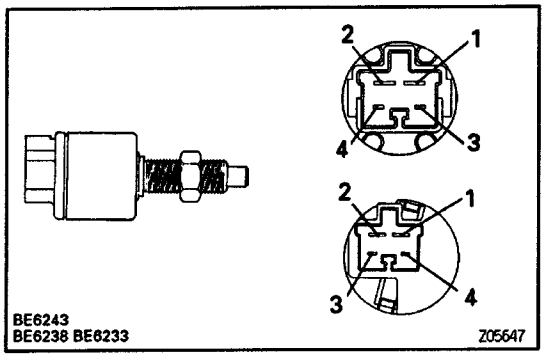

STOP LIGHT SWITCH INSPECTION

INSPECT STOP LIGHT SWITCH CONTINUITY

CCS: Cruise Control System

Switch position	Tester connection to terminal number	Specified condition
Switch pin free (Brake pedal depressed)	**1 – 2**	**Continuity**
Switch pin pushed in (Brake pedal released)	**3 – 4 (w/ CCS)**	**Continuity**

If continuity is not as specified, replace the switch.

TURN SIGNAL AND HAZARD WARNING SYSTEM

PARTS LOCATION

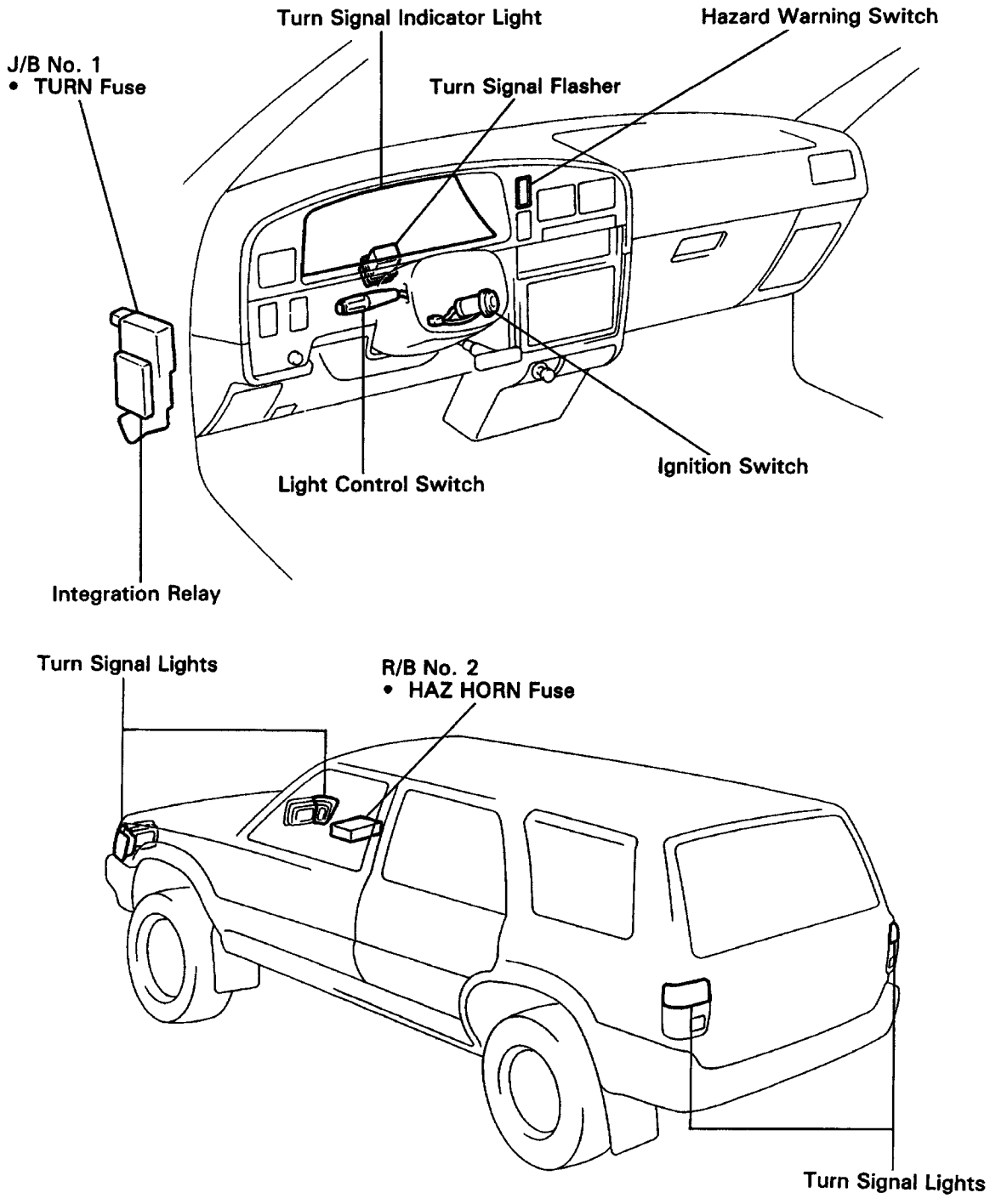

TROUBLESHOOTING

The table below will be useful for you in troubleshooting these electrical problems. The most likely causes of the malfunction are shown in the order of their probability. Inspect each part in the order shown, and replace the part when it is found to be faulty.

Trouble	Parts name	(See page)
”Hazard” and ”Turn” do not light up	1. Hazard Warning Switch 2. Turn Signal Flasher 3. Wire Harness	(BE–29) (BE–29)
The flashing frequency is abnormal	1. Bulb 2. Turn Signal Switch 3. Wire Harness	 (BE–21)
Hazard warning light does not light up (Turn signal is normal)	1. HAZ–HORN Fuse 2. Wire Harness	(BE–11)
Hazard warning light does not light up in one direction	1. Hazard Warning Switch 2. Wire Harness	(BE–29)
*1 Turn signal does not light up	1. Ignition Switch 2. TURN Fuse 3. Turn Signal Switch 4. Wire Harness	(BE–12) (BE–11) (BE–21)
*2 Turn signal does not light up	1. TURN Fuse 2. Turn Signal Switch 3. Wire Harness	(BE–11) (BE–21)
Turn signal does not light up in one direction	1. Turn Signal Switch 2. Wire Harness	(BE–21)
Only one bulb does not light up	1. Bulb 2. Wire Harness	

*1: Combination Meter, Wiper and Washer do not operate.
*2: Combination Meter, Wiper and Washer are normal.

TURN SIGNAL SWITCH INSPECTION

See Headlight Dimmer and Turn Signal Switch on page BE–21

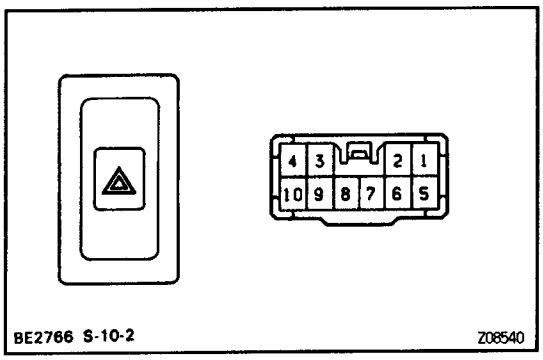

HAZARD WARNING SWITCH INSPECTION

INSPECT HAZARD WARNING SWITCH CONTINUITY

Switch position	Tester connection to terminal number	Specified condition
Switch OFF	**7 – 10**	**Continuity**
Switch ON	**4 – 5 – 6 – 9** **7 – 8**	**Continuity**
Illumination circuit	**2 – 3**	**Continuity**

If continuity is not as specified, replace the switch.

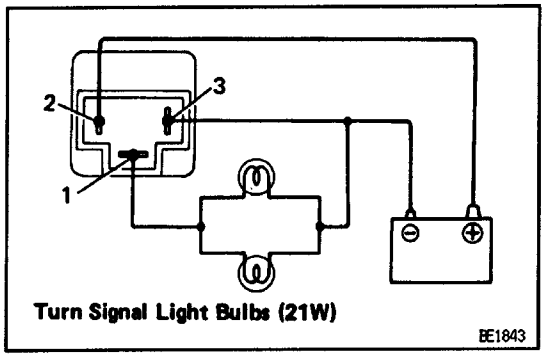

TURN SIGNAL FLASHER INSPECTION

INSPECT TURN SIGNAL FLASHER OPERATION

(a) Connect the positive (+) lead from the battery to terminal 2 and the negative (–) lead to terminal 3.

(b) Connect the 2 turn signal light bulbs in parallel to each other to terminals 1 and 3, check that the bulbs flash.
HINT: The turn signal lights should flash 60 to 120 times per minute.
If one of the front or rear turn signal lights has an open circuit, the number of flashes will be more than 140 per minute.
If operation is not as specified, replace the flasher.

WIPER AND WASHER SYSTEM

PARTS LOCATION

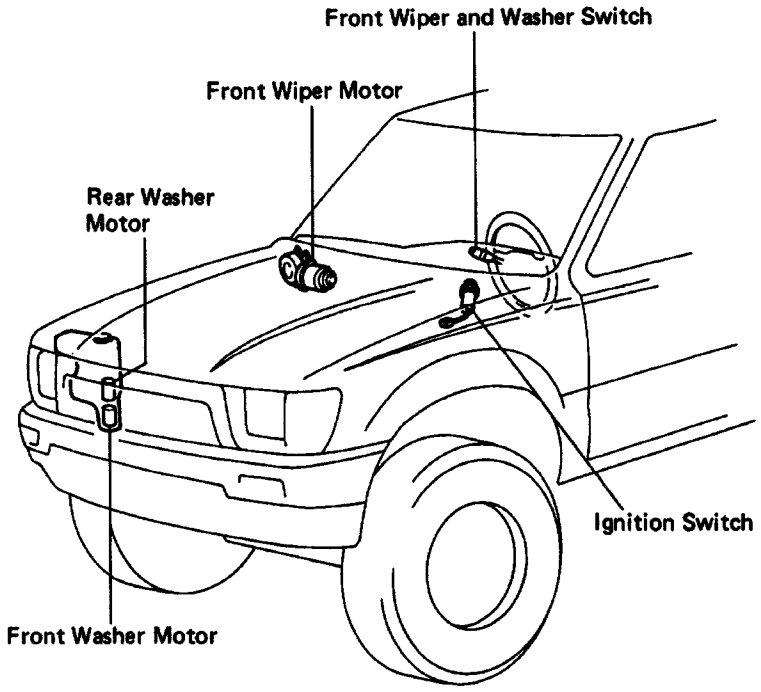

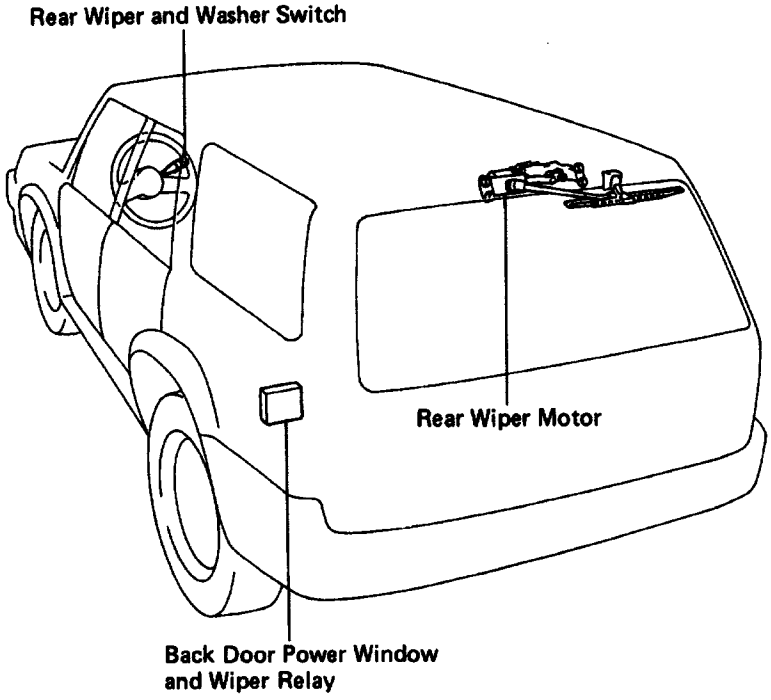

BE3222
BE3223

Z08539

TROUBLESHOOTING

The table below will be useful for you in troubleshooting these electrical problems. The most likely causes of the malfunction are shown in the order of their probability. Inspect each part in the order shown, and replace the part when it is found to be faulty.

FRONT WIPER

Trouble	Parts name	(See page)
Wipers does not operate or turn to off position	1. AM_1 H –Fuse	(BE–11)
	2. WIPER Fuse	(BE–11)
	3. Ignition Switch	(BE–12)
	4. Wiper and Washer Switch	(BE–40)
	5. Wiper Motor	(BE–42)
	6. Wire Harness	
Wiper does not operate in MIST position	1. Wiper and Washer Switch	(BE–40)
	2. Wiper Motor	(BE–42)
	3. Wire Harness	
Wiper does not operate in INT position	1. Wiper and Washer Switch	(BE–40)
	2. Wiper Motor	(BE–42)
	3. Wire Harness	
Washer does not operate	1. Wiper and Washer Switch	(BE–40)
	2. Washer Hose and Nozzle	
	3. Washer Motor	(BE–43)
	4. Wire Harness	

REAR WIPER AND WASHER

HINT: Before troubleshooting the rear wiper system, check that there is no problem in the Back Door Power Window Control System.

If there are some problems in that system, repair that system before repairing the rear wiper system.

Trouble	Parts name	(See page)
Wiper do not operate	1. Circuit Breaker OFF	
	2. WIPER Fuse	(BE–11)
	3. Wiper Motor	(BE–43)
	4. Wiper Switch	(BE–43)
	5. Limit Switch	(BE–73)
	6. Back Door Power Window and Relay	(BE–74)
	7. Wire Harness	
Wiper do not return to off position	1. Wiper Motor or Link	(BE–43)
	2. Back Door Power Window and Wiper Relay	(BE–74)
	3. Wire Harness	
Washers do not operate	1. Washer Hose or Nozzle Clogged	
	2. Washer Motor	(BE–44)
	3. Washer Switch	(BE–43)
	4. Back Door Power Window and Wiper Relay	(BE–74)
	5. Wire Harness	

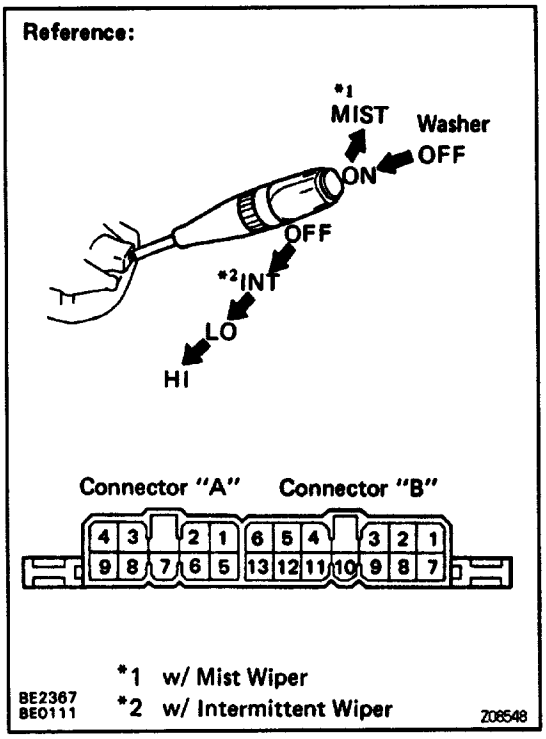

COMBINATION SWITCH INSPECTION

COMBINATION SWITCH DISASSEMBLY

See page BE–19

COMBINATION SWITCH ASSEMBLY

See page BE–20

1. INSPECT FRONT WIPER CONTINUITY

w/Mist Wiper

Switch position	Tester connection to terminal number	Specified condition
MIST	A4 – A8	Continuity
OFF	A7 – A8	Continuity
LO	A4 –A8	Continuity
HI	A4 – A9	Continuity

If continuity is not as specified, replace the switch.

w/Intermittent Wiper

Switch position	Tester connection to terminal number	Specified condition
OFF	A7 – A8	Continuity
INT	A7 – A8	Continuity
LO	A4 – A8	Continuity
HI	A4 – A9	Continuity

If continuity is not as specified, replace the switch.

2. INSPECT FRONT WASHER CONTINUITY

w/Mist Wiper

Switch position	Tester connection to terminal number	Specified condition
OFF	–	No continuity
ON	A1 – A2	Continuity

If continuity is not as specified, replace the switch.

w/Intermittent Wiper

Switch position	Tester connection to terminal number	Specified condition
OFF	–	No continuity
ON	A1 – A2	Continuity

If continuity is not as specified, replace the switch.

3. INSPECT FRONT WIPER OPERATION

intermittent wiper

(a) Turn the wiper switch to INT position.

(b) Variable Type:

Turn the intermittent time control switch to FAST position.

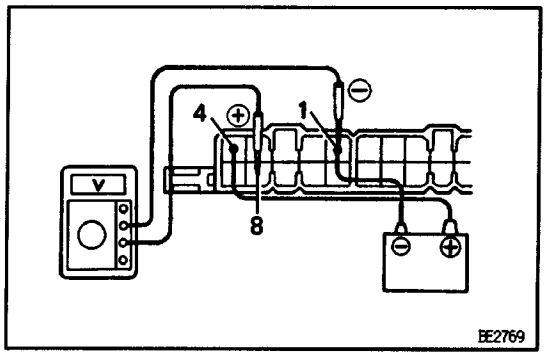

(c) Connect the positive (+) lead from the battery to terminal A4 and the negative (–) lead to terminal A1.

(d) Connect the positive (+) lead from the voltmeter to terminal A8 and the negative (–) lead to terminal A1, check that the meter needle indicates battery positive voltage.

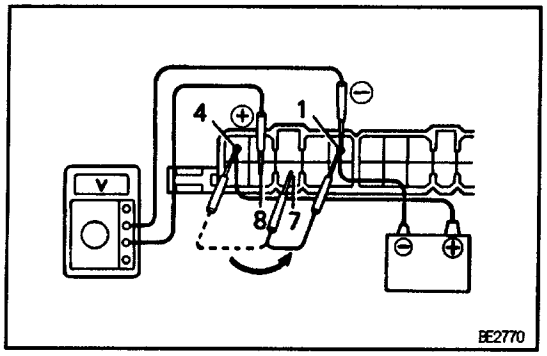

(e) After connecting terminal A7 to terminal A4, connect to terminal A1.

Then, check that the voltage rises from 0 volts to battery positive voltage within the times, as shown in the table.

Non Variable Type

Switch position	Specified condition
INT	3.3 ± 1 sec. — Battery positive voltage / 0 volts

Variable Type

Switch position		Specified condition
INT	FAST	1.6 ± 1 sec. — Battery positive voltage / 0 volts
	LOW	10.7 ± 5 sec. — Battery positive voltage / 0 volts

If operation is not as specified, replace the switch.

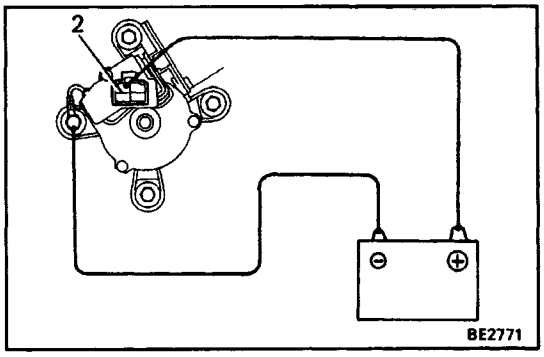

FRONT WIPER MOTOR INSPECTION

INSPECT FRONT WIPER MOTOR OPERATION

Low Speed

Connect the positive (+) lead from the battery to terminal 2 and the negative (–) lead to the motor body, check that the motor operates at low speed.
If operation is not as specified, replace the motor.

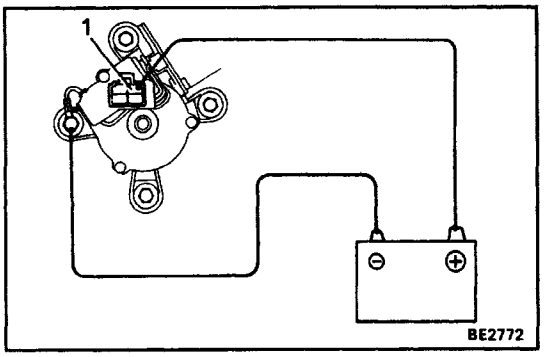

High Speed

Connect the positive (+) lead from the battery to terminal 1 and negative (–) lead to the motor body, check that the motor operates at high speed.
If operation is not as specified, replace the motor.

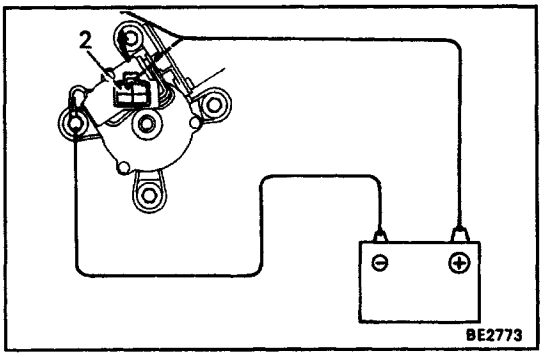

Stopping at Stop Position

(a) Operate the motor at low speed and stop the motor operation anywhere except at the stop position by disconnecting positive (+) lead from terminal 2.

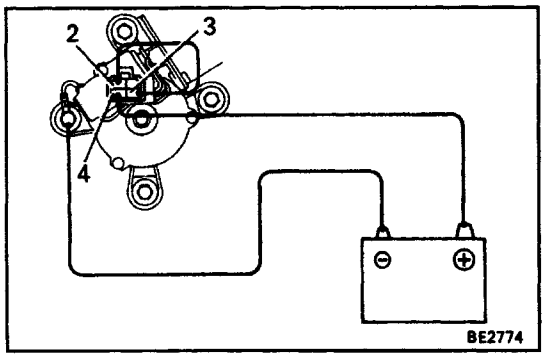

(b) Connect terminals 2 and 3.
(c) Connect the positive (+) lead from the battery to terminal 4 and the negative (–) lead to motor body, check that the motor stops running at the stop position after the motor operates again.
If operation is not as specified, replace the motor.

FRONT WASHER SWITCH INSPECTION

See Wiper and Washer Switch on page BE–40

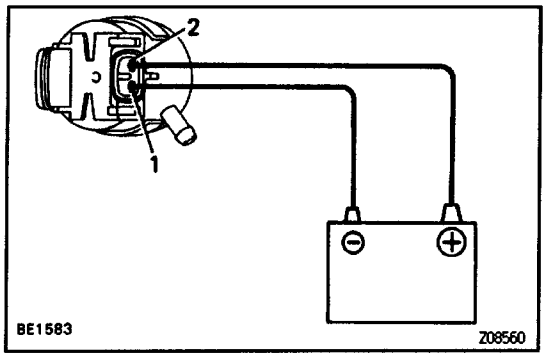

FRONT WASHER MOTOR INSPECTION

INSPECT FRONT WASHER MOTOR

Connect the positive (+) lead from the battery to terminal 2 and the negative (–) lead to terminal 1, check that the motor operates.

NOTICE: These tests must be performed quickly (Within 20 seconds) to prevent the coil from burning out.

If operation is not as specified, replace the motor.

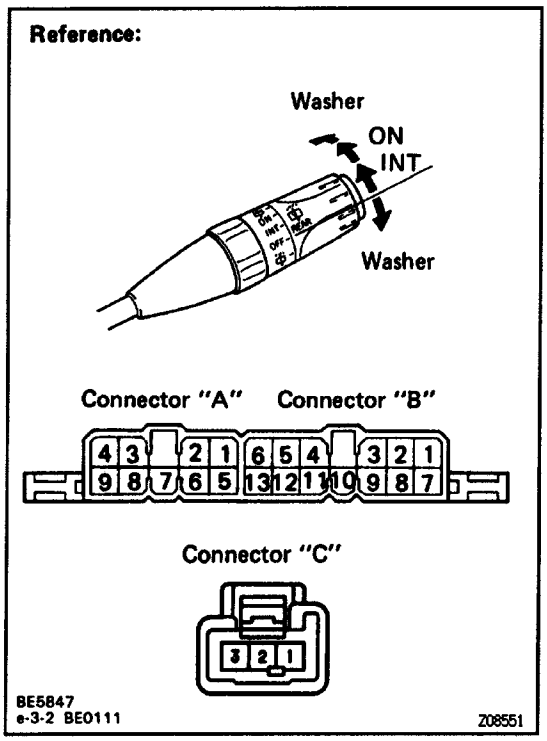

REAR WIPER AND WASHER SWITCH INSPECTION

INSPECT REAR WIPER AND WASHER SWITCH CONTINUITY

Switch position	Tester connection to terminal number	Specified condition
Washer	**A1 – C3**	**Continuity**
OFF	**–**	**No continuity**
INT	**A1 – C2**	**Continuity**
ON	**A1 – C1**	**Continuty**
Washer	**A1 – C1 – C3**	**Continuity**

If continuity is not as specified, replace the switch.

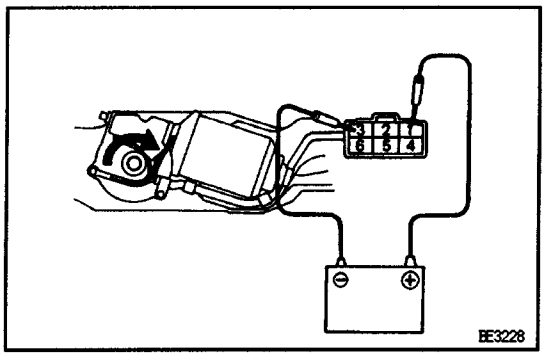

REAR WIPER MOTOR INSPECTION

INSPECT REAR WIPER MOTOR OPERATION

(a) Connect the positive (+) lead from the battery to terminal 1 and the negative (–) lead to terminal 3, check that the motor turns clockwise.

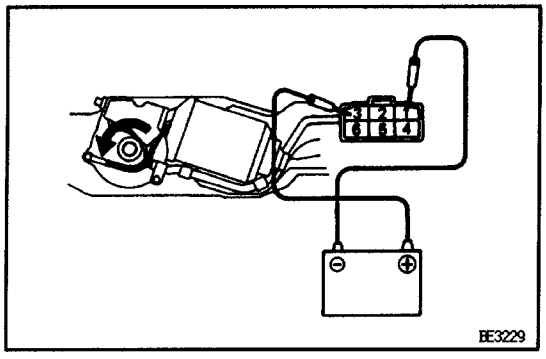

(b) Reverse the polarity, check that the motor turns counter-clockwise.

If operation is not as specified, replace the motor.

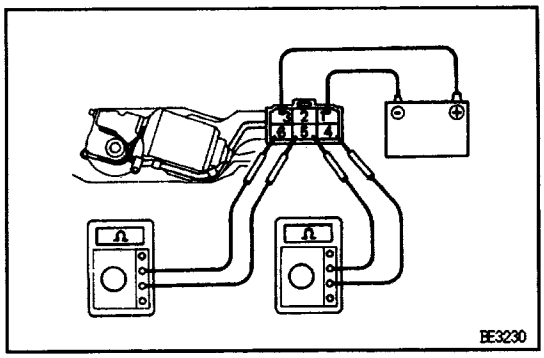

REAR WIPER MOTOR INSPECTION

INSPECT REAR WIPER MOTOR CONTINUITY

Connect the positive (+) lead from the battery to terminal 3 and the negative (–) lead to terminal 1, inspect the continuity between terminals.

Motor link position	Tester connection to terminal number	Specified condition
A	5 – 6	Continuity
B	4 – 5 – 6	Continuity
C	5 – 6	Continuity
Except A, B or C	–	No continuty

If continuity is not as specified, replace the motor.

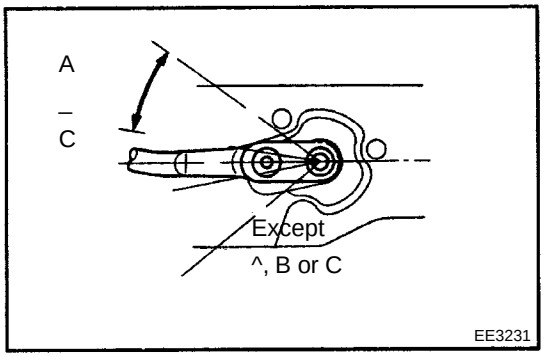

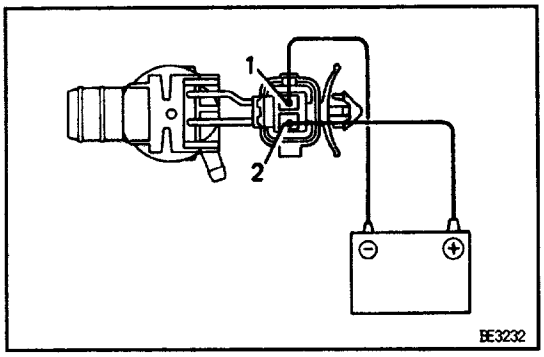

REAR WASHER MOTOR INSPECTION

INSPECT REAR WASHER MOTOR OPERATION

Connect the positive (+) lead from the battery to terminal 2 and the negative (–) lead to terminal 1, check that the motor operates.

NOTICE: These tests must be performed quickly (within 20 seconds) to prevent the coil from burning out.

LIMIT SWITCH INSPECTION

See Window Limit Switch on page BE–73

BACK DOOR POWER WINDOW AND WIPER RELAY INSPECTION

See Power Window end Wiper Relay on page BE–74

BACK DOOR
COMPONENTS

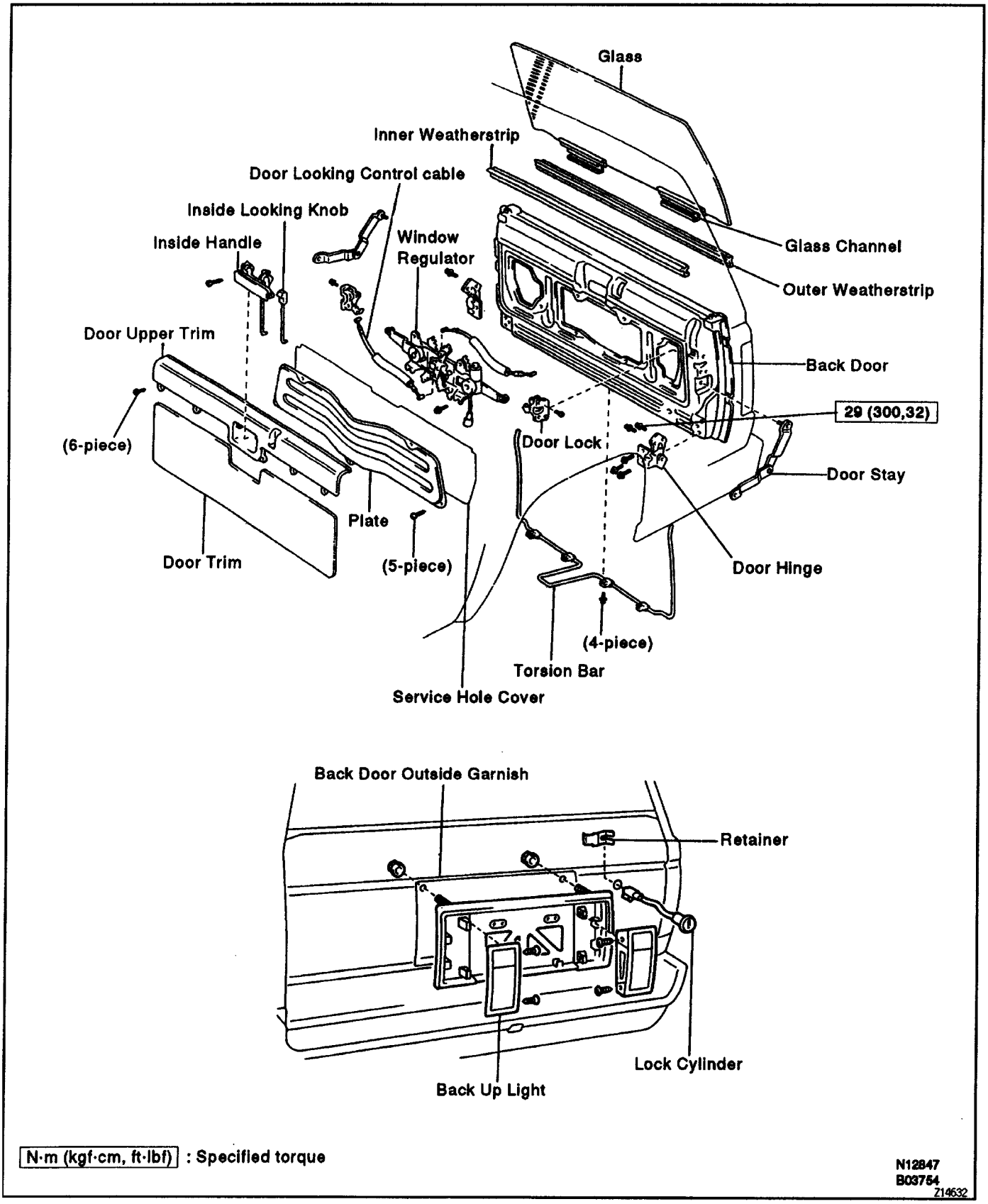

N·m (kgf·cm, ft·lbf) : Specified torque

N12847
B03754
Z14632

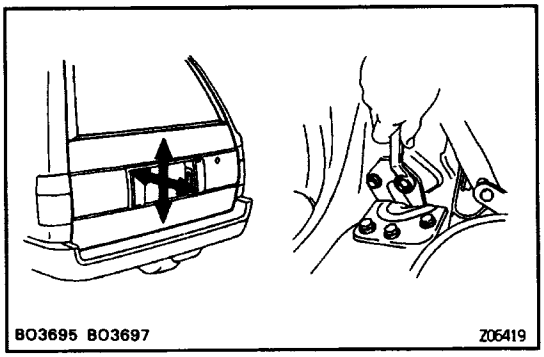

BACK DOOR ADJUSTMENT

1. ADJUST DOOR IN FORWARD/ REARWARD AND VERTICAL DIRECTIONS

Loosen the body side hinge bolts to adjust.

Torque: 29 N–m (300 kgf–cm, 22 ft–lbf)

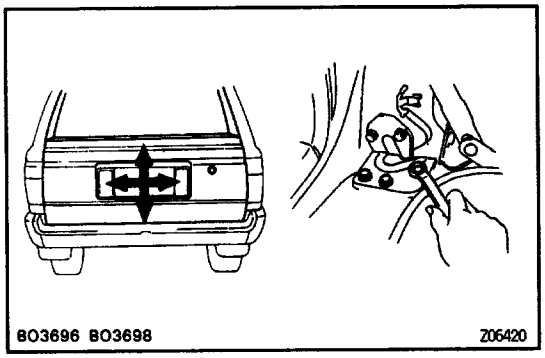

2. ADJUST DOOR IN LEFT/ RIGHT AND VERTICAL DIRECTIONS

Loosen the door side hinge bolts to adjust.

Torque: 29 N–m (300 kgf–cm, 22 ft–lbf)

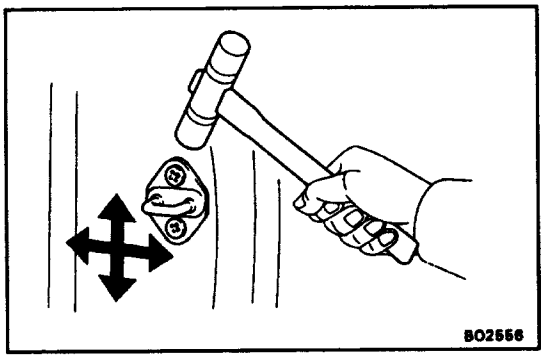

3. ADJUST DOOR LOCK STRIKER

(a) Check that the door fit and door lock linkages are adjusted correctly.

(b) Adjust the striker position by slightly loosening the striker mounting screws, and hitting the striker with a hammer.

(c) Tighten the striker mounting screws again.

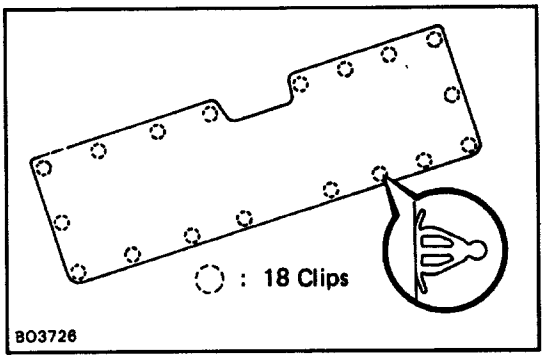

BACK DOOR DISASSEMBLY

1. REMOVE DOOR TRIM

(a) Insert the screwdriver, between the retainers and the door trim to pry it loose.

HINT: Tape the screwdriver tip before use.

(b) Remove the door trim.

2. REMOVE PLATE

Remove the 5 screws and the plate.

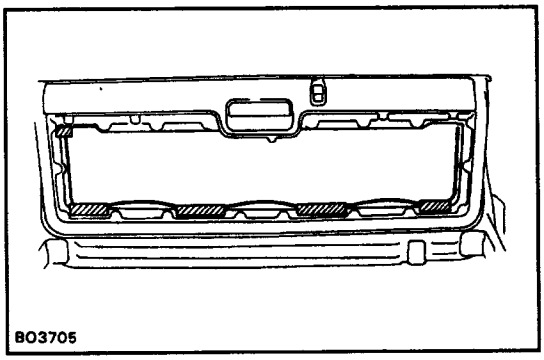

3. REMOVE SERVICE HOLE COVER

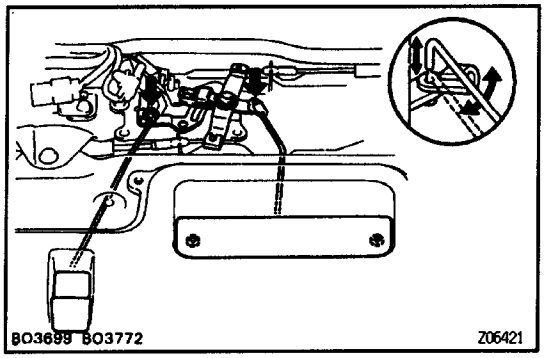

4. REMOVE INSIDE HANDLE

(a) Remove the 2 screws.

(b) Disconnect the link from the regulator and the inside handle.

(c) Remove the inside handle.

5. REMOVE INSIDE LOCKING KNOB

(a) Disconnect the link from the regulator.

(b) Remove the inside locking knob by pulling.

6. REMOVE DOOR UPPER TRIM

Remove the 6 screws and the door upper trim.

7. REMOVE INNER WEATHERSTRIP FROM DOOR UPPER TRIM

8. DISCONNECT CONNECTORS

(a) Disconnect the 3 connectors from the regulator.

(b) Disconnect the door lock switch connectors.

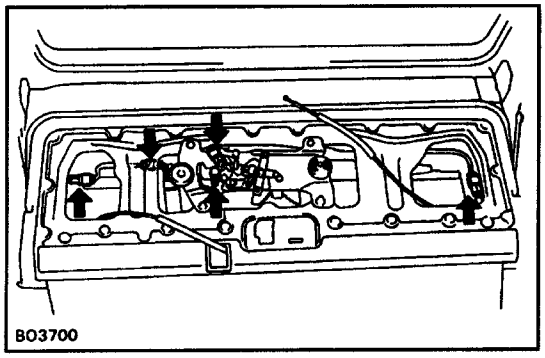

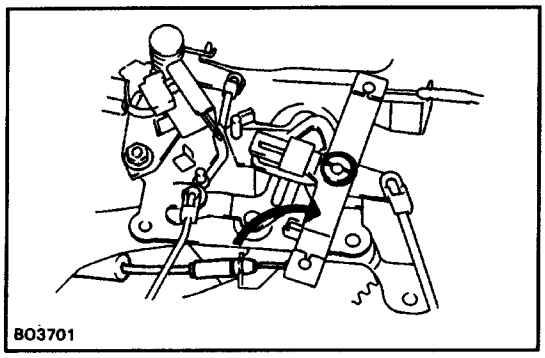

9. DISCONNECT DOOR LOCKING CONTROL CABLES

10. REMOVE REGULATOR MOUNTING BOLTS

Remove the 4 regulator mounting bolts.

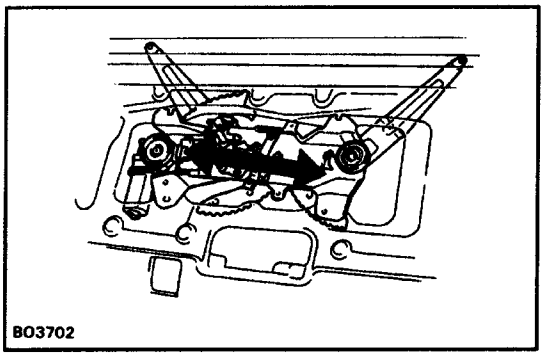

11. SLIDE OUT ARMS OF REGULATOR FROM DOOR GLASS

Slide the regulator left and right, and pull the arms from the glass channels.

12. REMOVE DOOR GLASS

(a) w/ Rear Window Defogger:

Disconnect the rear window defogger connectors from the glass.

(b) Remove the glass by pulling.

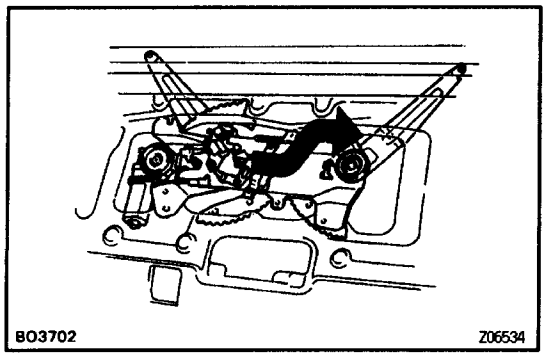

13. REMOVE WINDOW REGULATOR

Remove the regulator through the service hole.

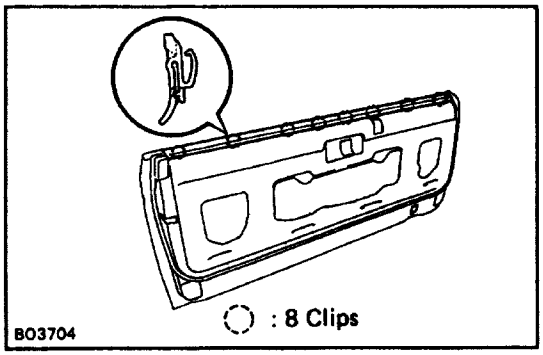

14. REMOVE OUTER WEATHERSTRIP

Pry loose the clips from the edge of the panel and remove the outer weatherstrip.

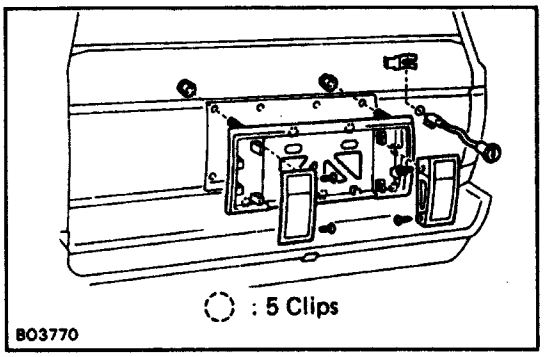

15. REMOVE BACKUP LIGHT

(a) Remove the 2 screws and the back up light.
(b) Disconnect the connector.

16. REMOVE BACK DOOR OUTSIDE GARNISH

(a) Remove the 2 nuts from the outside garnish.
(b) Using a scraper, pry loose the retainers and remove the outside garnish.

HINT: Tape the scraper tip before use.

17. REMOVE BACK DOOR LOCK CYLINDER

(a) Disconnect the connector.
(b) Remove the retainer and the back door lock cylinder.

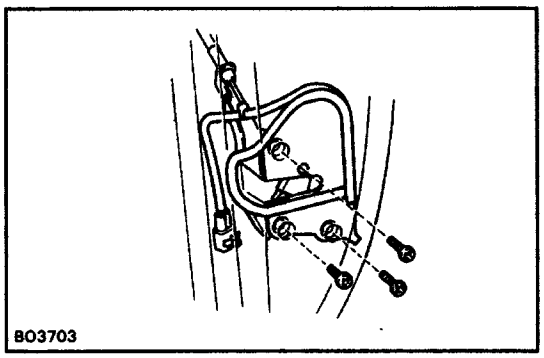

18. REMOVE DOOR LOCK

Remove the 3 screws and the door lock.

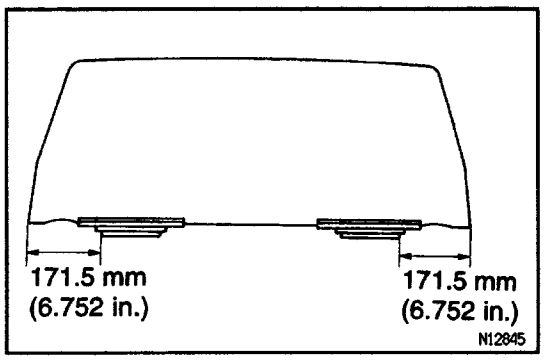

GLASS REPLACEMENT

1. REMOVE GLASS CHANNELS WITH SCREWDRIVER OR LIKE OBJECT

2. APPLY SOAPY WATER TO INSIDE OF WEATHER–STRIP

3. INSTALL CHANNELS BY TAPPING IT WITH PLASTIC HAMMER

BACK DOOR ASSEMBLY

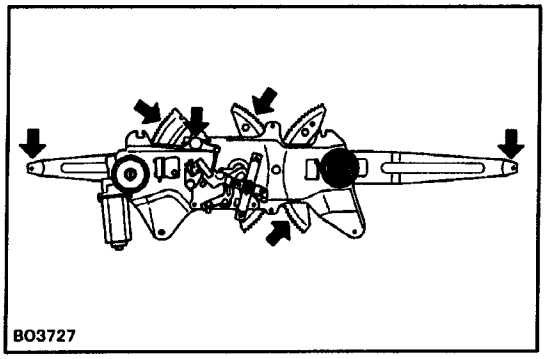

1. BEFORE INSTALLING PARTS COAT THEM WITH MP GREASE

(a) Apply MP grease to the sliding surface and gears of the window regulator.

NOTICE : Do not apply MP grease to the spring of the window regulator.

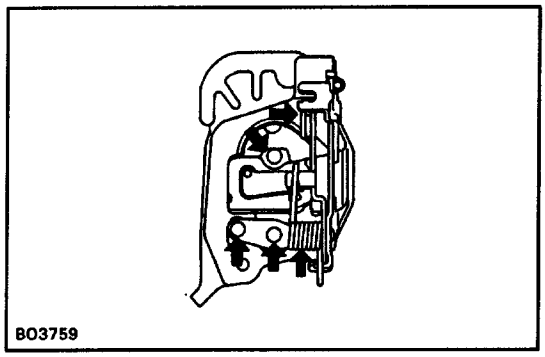

(b) Apply MP grease to the sliding surface of the door lock.

2. INSTALL DOOR LOCK

Install the door lock with the 3 screws.

3. INSTALL BACK DOOR LOCK CYLINDER

(a) Install the back door lock cylinder with the retainer.

(b) Connect the connector.

4. INSTALL BACK DOOR OUTSIDE GARNISH

(a) Install the outside garnish with retainers to the outside panel by tapping.

(b) Install the 2 nuts.

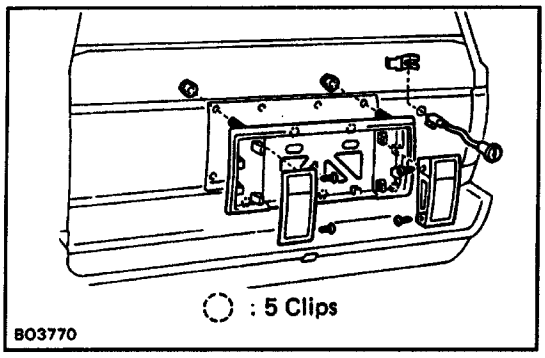

6. INSTALL BACK UP LIGHT

(a) Connect the connector.

(b) Install the back up light with the 2 screws.

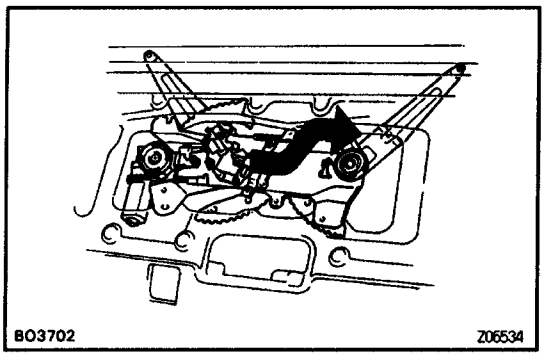

6. INSTALL OUTER WEATHERSTRIP

Install the claw of the clips to the upper panel slit and push the weatherstrip onto the panel.

7. PLACE WINDOW REGULATOR

8. INSTALL DOOR GLASS

(a) Place the glass.

(b) w/ Rear Window Defogger:

Connect the rear window defogger connectors to the glass.

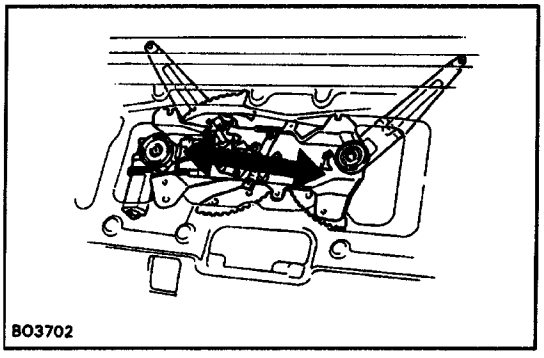

9. SLIDE ARMS OF REGULATOR INTO DOOR GLASS

Slide the regulator left and right to insert the arms into the glass channels.

10. INSTALL REGULATOR MOUNTING BOLTS

Install the 4 regulator mounting bolts.

11. CONNECT DOOR LOCKING CONTROL CABLES

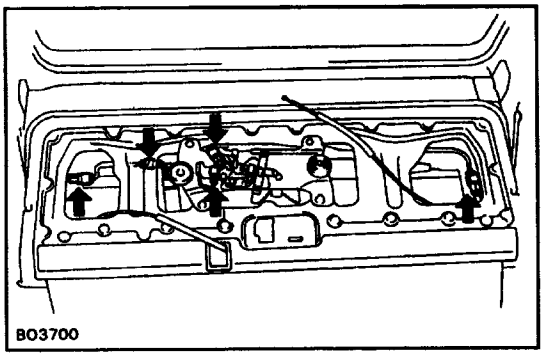

12. CONNECT THE CONNECTORS

(a) Connect the 3 connectors to the regulator.

(b) Connect the door lock switch connectors.

13. INSTALL INNER WEATHERSTRIP TO DOOR UPPER TRIM

14. INSTALL DOOR UPPER TRIM

Install the door upper trim with the 6 screws.

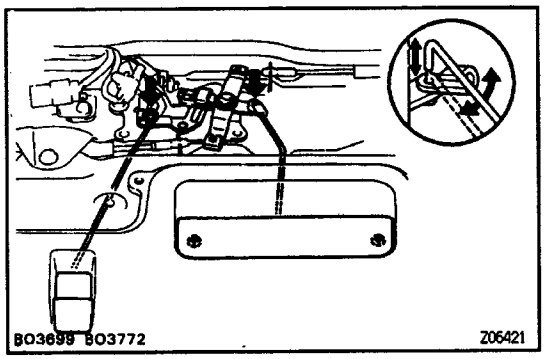

15. INSTALL INSIDE LOCKING KNOB

(a) Install the inside locking knob to the door.

(b) Connect the link to the regulator.

15. INSTALL INSIDE HANDLE

(a) Connect the link to the inside handle and the regulator.

(b) Install the inside handle with the 2 screws.

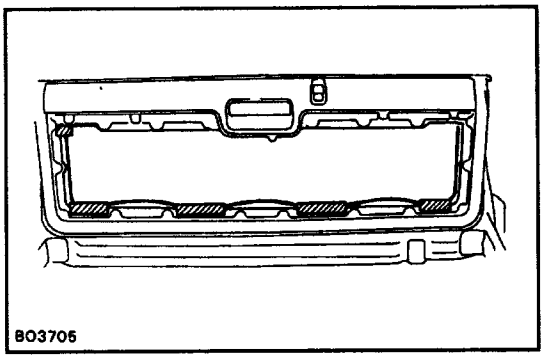

17. INSTALL SERVICE HOLE COVER

(a) Seal the service hole cover with adhesive.

(b) Insert the lower edge of the service hole cover into the panel slit.

(c) Seal the panel slit with the cotton taps.

NOTICE: Do not block the trim clip sealing with the tape.

18. INSTALL PANEL

Install the panel with the 5 screws.

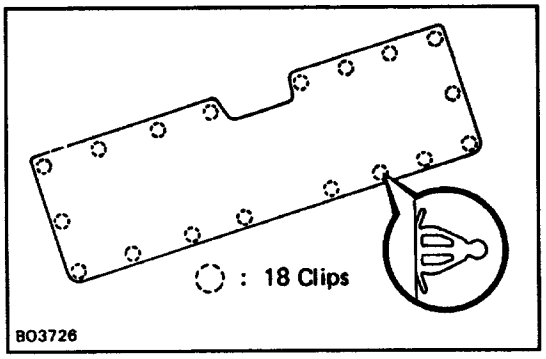

19. INSTALL DOOR TRIM

Install the door trim with retainers to the inside door panel by tapping.

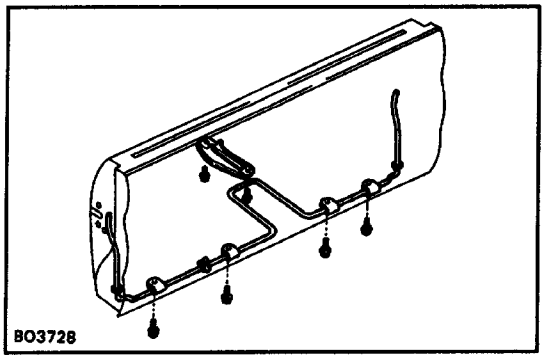

BACK DOOR REMOVAL

1. REMOVE TORSION BAR FROM BACK DOOR

(a) Remove the 4 bolts and the clamps.
(b) Remove the clip.
(c) Remove the torsion bar from the door.
(d) Remove the 2 bolts and the torsion bar guide.

2. REMOVE DOOR STAY

Remove the 2 bolts and the door stay.

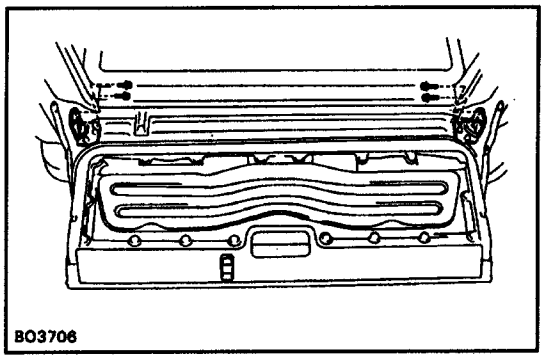

3. REMOVE BACK DOOR

Remove the 4 bolts of the door hinges and remove the door.

BACK DOOR INSTALLATION

1. INSTALL BACK DOOR

Install the door and the door hinges with the 4 bolts.
Torque: 29 N–m (300 kgf–cm, 22 ft–lbf)

2. INSTALL DOOR STAY

Install the door stay with the 2 bolts.

3. INSTALL TORSION BAR TO BACK DOOR

(a) Install the torsion bar guide with the 2 bolts.
(b) Install the torsion bar into the door.
(c) Install the clip.
(d) Install the 4 clamps and the bolts.

FRONT DOOR
COMPONENTS

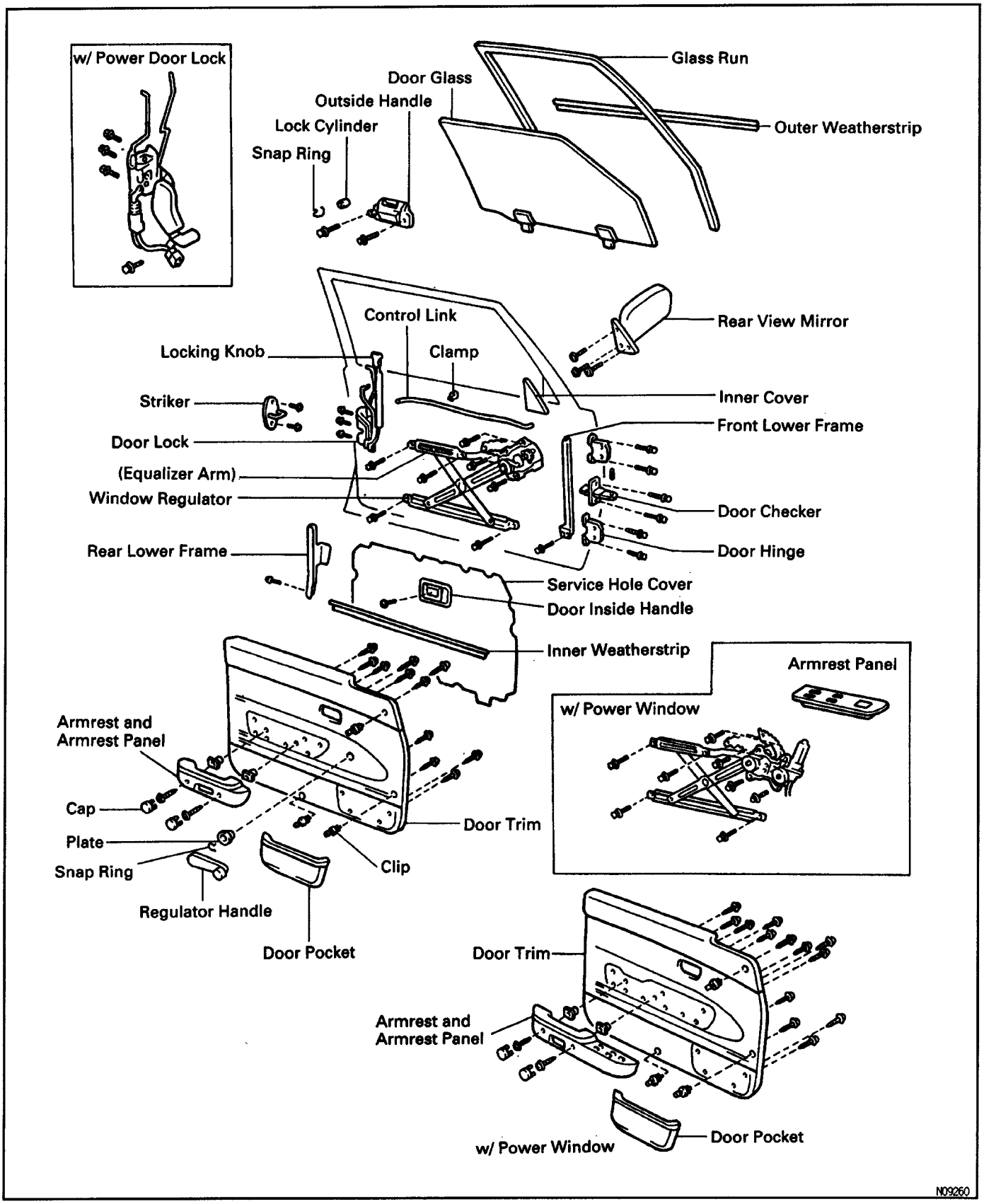

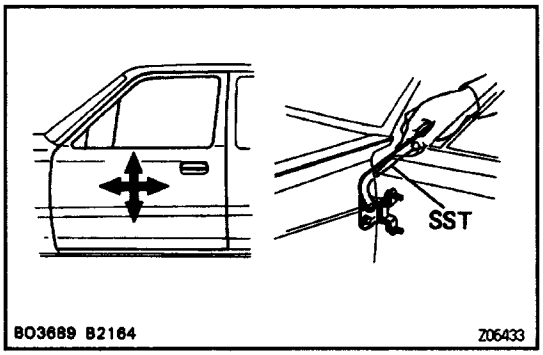

FRONT DOOR ADJUSTMENT

1. ADJUST DOOR IN FORWARD/ REARWARD AND VERTICAL DIRECTIONS

Using SST, adjust the door by loosening the body side hinge bolts.

SST 09812 – 00010

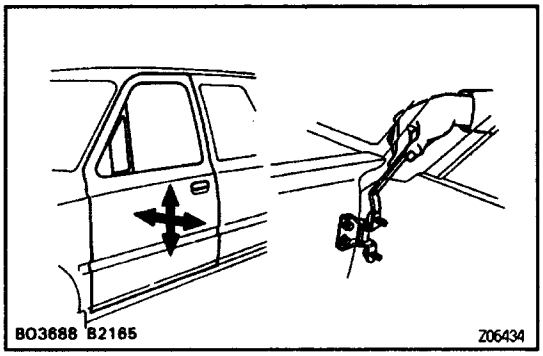

2. ADJUST DOOR IN LEFT/ RIGHT AND VERTICAL DIRECTIONS

Loosen the door side hinge bolts to adjust.

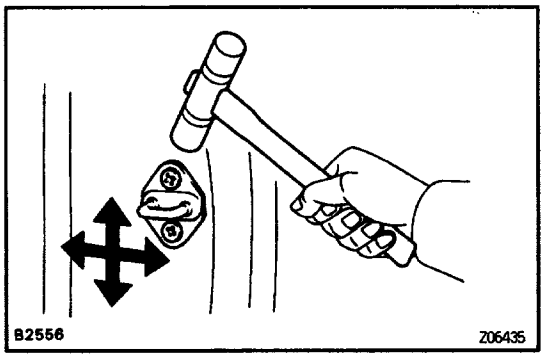

3. ADJUST DOOR LOCK STRIKER

(a) Check that the door fit and door lock linkages are adjusted correctly.

(b) Adjust the striker position by slightly loosening the striker mounting screws, and hitting the striker with a hammer.

(c) Tighten the striker mounting screws again.

FRONT DOOR DISASSEMBLY

1. w/o Power Window:

REMOVE REGULATOR HANDLE

Pull oft the snap ring with a cloth and remove the regulator handle and plate.

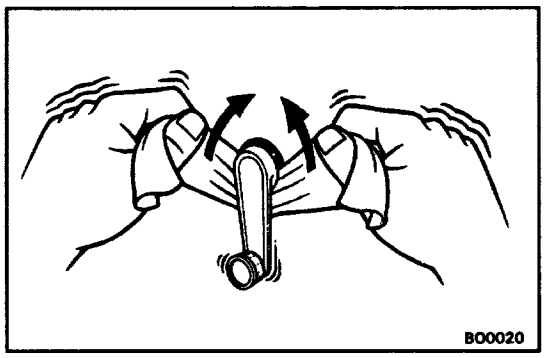

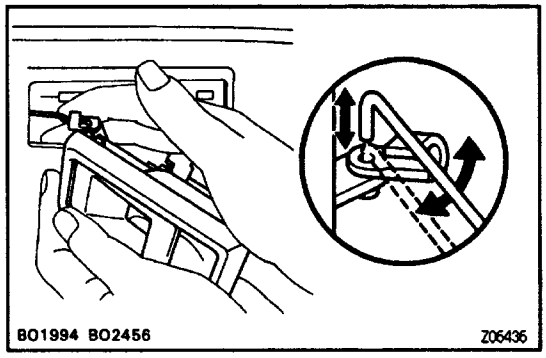

2. REMOVE DOOR INSIDE HANDLE

(a) Remove the screw and slide the handle forward.

(b) Disconnect the handle from the control link and remove the handle.

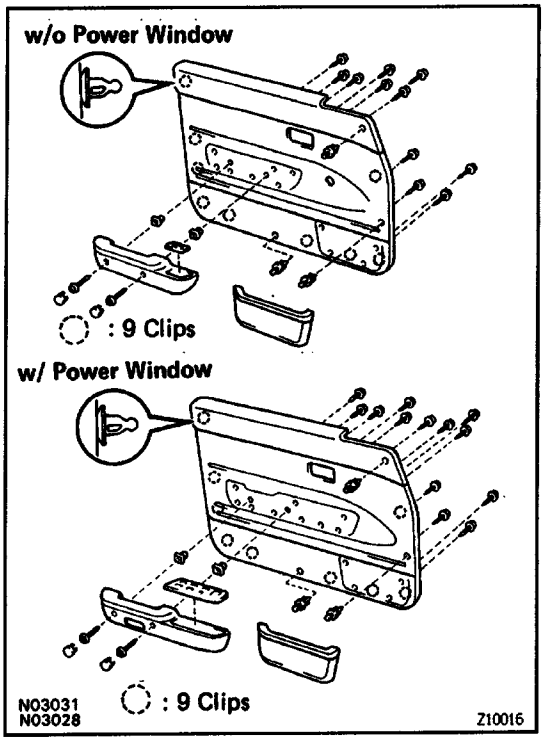

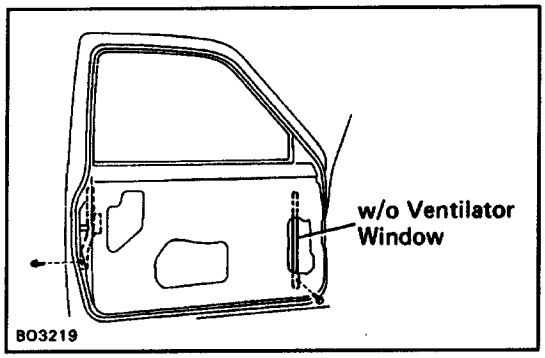

3. REMOVE INNER AND OUTER COVERS

(a) Using a screwdriver, pry loose the clip and remove the inner cover.

HINT: Tape the screwdriver tip before use.

(b) w/ Ventilator Window or w/o Rear View Mirror:
Remove the 3 screws and the outer cover.

4. REMOVE REAR VIEW MIRROR

(a) w/ Remote Control Mirror:
Disconnect the connector.

(b) w/ Ventilator Window:
Remove the mirror cover, 2 bolts and the mirror.
w/o Ventilator Window:
Remove the 3 screws and the mirror.

5. REMOVE DOOR TRIM

(a) Remove the 2 caps from the armrest.

(b) Remove the 2 screws from the armrest.

(c) w/ Power Window:
Remove the armrest panel by pulling upward, then disconnect the connectors.

(d) Remove the 3 clips.

(e) Insert a screwdriver between the retainers and door trim to pry it loose.

HINT: Tape the screwdriver tip before use.

(f) Remove the door trim with the armrest.

(g) w/ Power Window:
Remove the 9 screws and the armrest.
w/o Power Window:
Remove the 7 screws and the armrest.

(h) Remove the 4 screws and the door pocket from the door trim.

(i) Remove the inner weatherstrip from the door trim.

6. REMOVE SERVICE HOLE COVER

7. REMOVE REAR LOWER FRAME

Remove the bolt and the frame.

8. REMOVE FRONT LOWER FRAME

Remove the bolt and the frame.

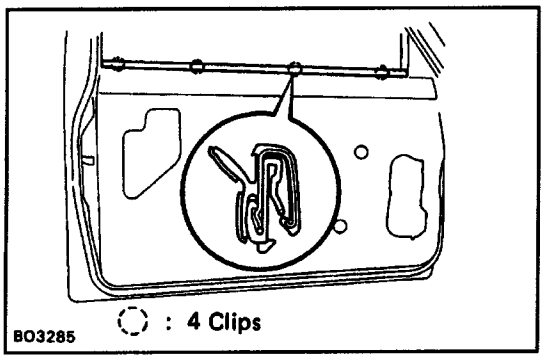

9. REMOVE OUTER WEATHERSTRIP

Pry loose the clips from the edge of the panel and remove the outer weatherstrip.

10. REMOVE GLASS RUN

11. REMOVE INSIDE LOCKING KNOB

Disconnect the link and remove the inside locking knob.

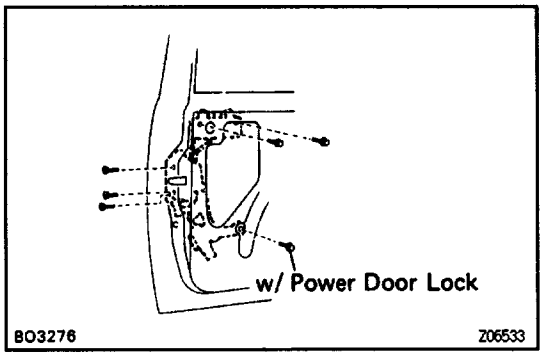

12. REMOVE OUTSIDE HANDLE WITH LOCK CYLINDER AND DOOR LOCK

(a) Disconnect the links from the outside handle with the lock cylinder.

(b) w/ Power Door Lock:

Disconnect the connector, remove the 3 screws, the bolt and the door lock with the motor.

w/o Power Door Lock:

Remove the 3 screws and the door lock.

(c) Remove the snap ring and the lock cylinder.

(d) Remove the 2 bolts and the outside handle.

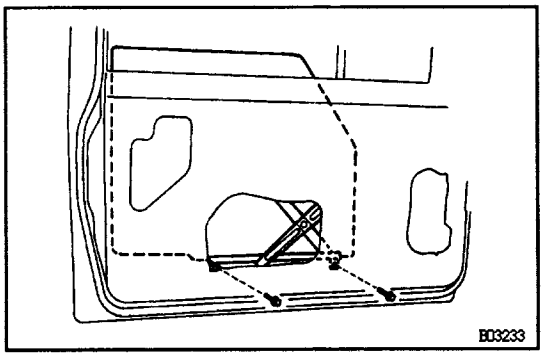

13. REMOVE DOOR GLASS AND WINDOW REGULATOR

(a) Remove the 2 glass channel mounting bolts.

(b) Place the glass in the door cavity.

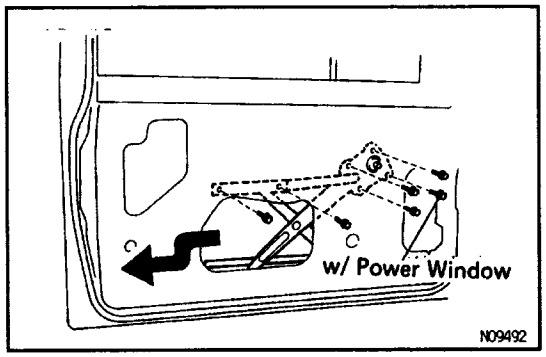

(c) w/o Ventilator Window:

Remove the 2 equalizer arm bracket mounting bolts.

(d) w/ Power Window:

Disconnect the connector, then remove the 4 regulator mounting bolts.

w/o Power Window:

Remove the 3 regulator mounting bolts.

(e) Remove the regulator through the service hole.

(f) Remove the glass by pulling it upward.

FRONT DOOR ASSEMBLY

1. BEFORE INSTALLING PARTS. COAT THEM WITH MP GREASE

(a) Apply MP grease to the sliding surface and the gears of the window regulator.

NOTICE: Do not apply MIX grease to the spring of the window regulator.

(b) Apply MP grease to the sliding surface of the door lock.

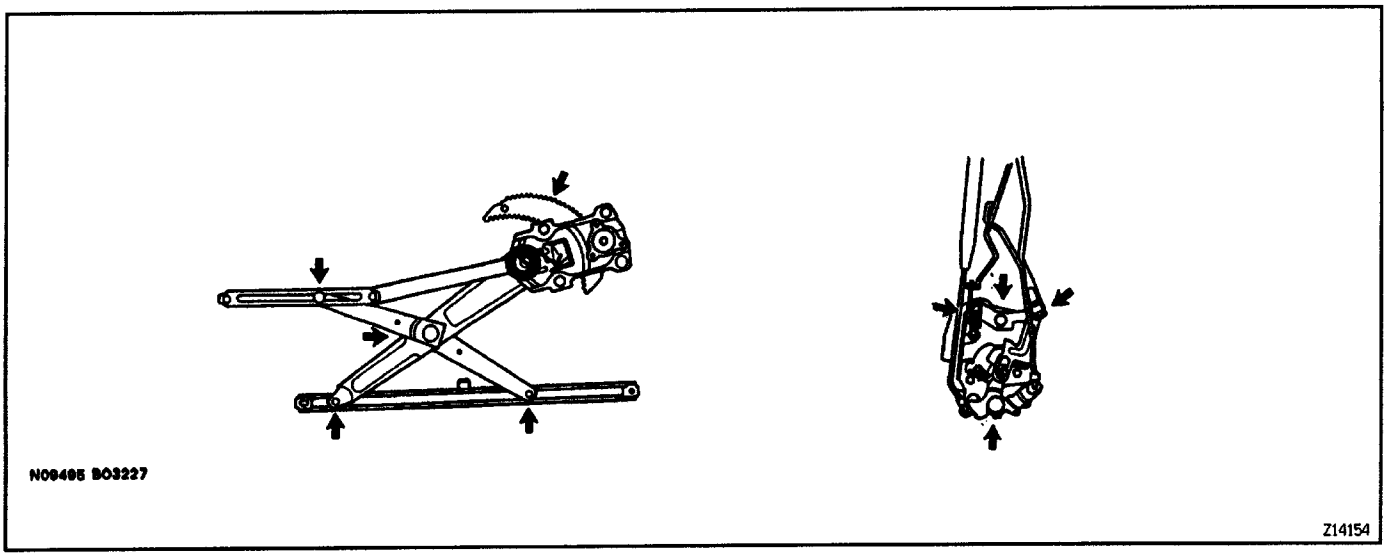

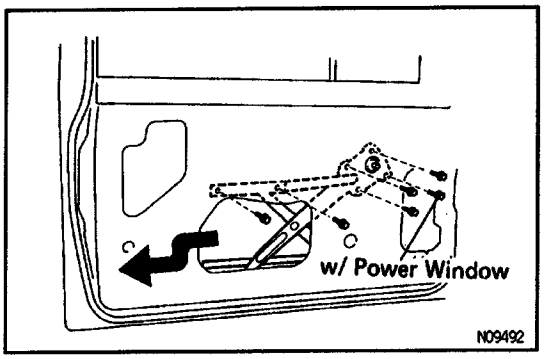

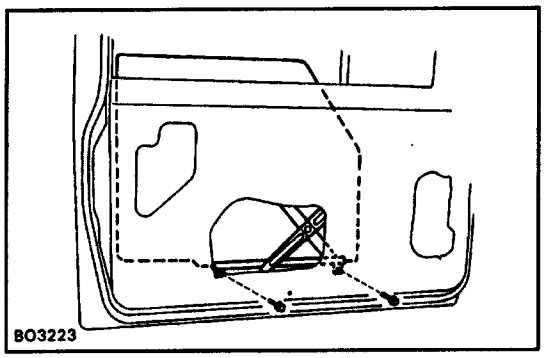

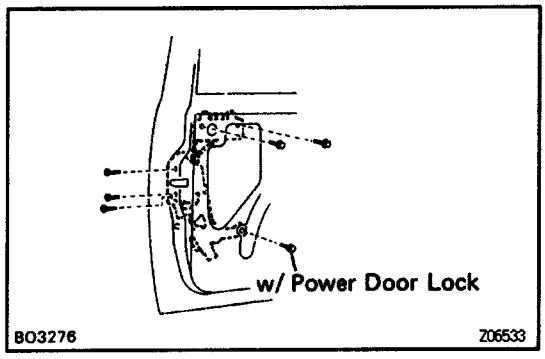

2. INSTALL WINDOW REGULATOR AND DOOR GLASS

(a) Place the glass in the door cavity.

(b) Place the regulator through the service hole.

(c) w/ Power Window:

Install the 4 regulator mounting bolts, then connect the connector.

w/o Power Window:

Install the 3 regulator mounting bolts.

(d) w/o Ventilator Window:

Install the equalizer arm and temporarily tighten the 2 equalizer arm mounting bolts.

(e) Attach the glass to the window regulator with the 2 bolts.

3. INSTALL OUTSIDE HANDLE WITH LOCK CYLIN– DER AND DOOR LOCK

(a) Install the outside handle with the 2 bolts.

(b) install the lock cylinder with the snap ring.

(c) w/ Power Door Lock:

Install the door lock with the 3 screws and the bolt, then connect the connector.

w/o Power Door Lock:

Install the door lock with the 3 screws.

(d) Connect the links to the outside handle.

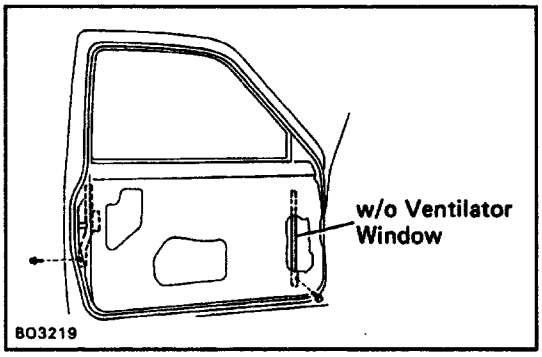

4. INSTALL INSIDE LOCKING KNOB

Install the locking knob and connect the control links.

5. INSTALL GLASS RUN

6. INSTALL REAR LOWER FRAME

Install the frame with the bolt.

7. INSTALL FRONT LOWER FRAME

Install the frame with the bolt.

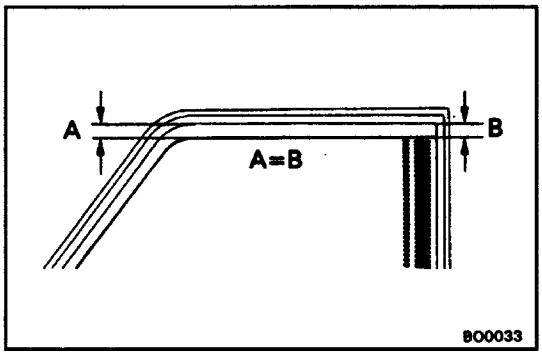

8. ADJUST DOOR GLASS

Adjust the equalizer arm up to down and tighten it where dimensions A and B, as shown, are equal.

9. INSTALL REAR VIEW MIRROR

10. INSTALL INNER AND OUTER COVERS

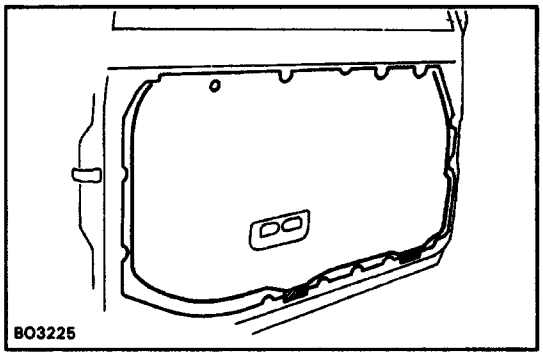

11. INSTALL SERVICE HOLE COVER

(a) Seal the service hole cover with adhesive.

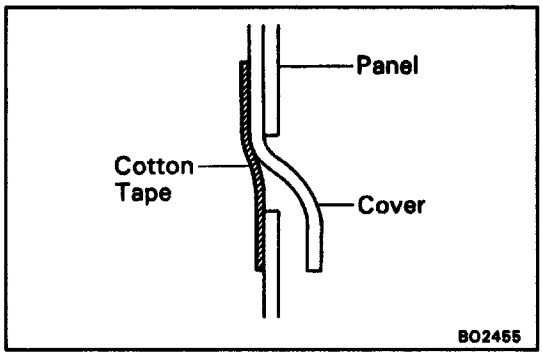

(b) Insert the lower edge of the service hole cover into the panel slit.

(c) Seal the panel slit with the cotton tape.

NOTICE: Do not block the trim clip sealing with the tape.

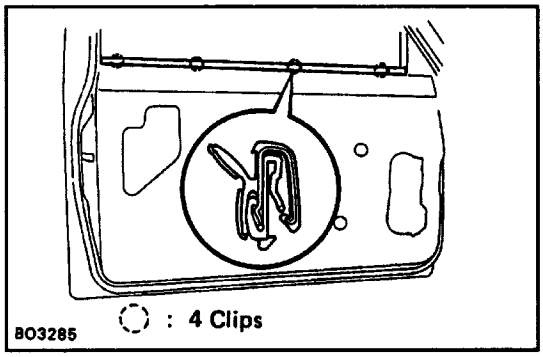

12. INSTALL OUTER WEATHERSTRIP

Insert the claw of the clips into the upper panel slit and push the weatherstrip onto the panel.

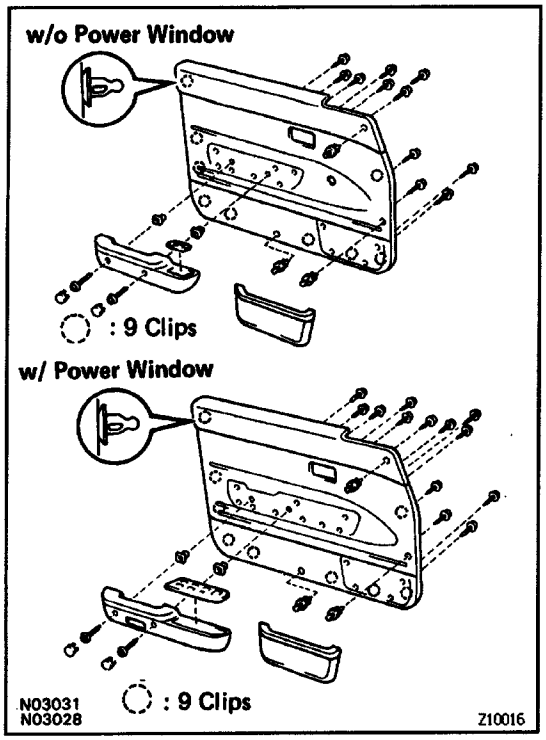

13. INSTALL DOOR TRIM

(a) Install the inner weatherstrip to the door trim.

(b) Install the door pocket with the 4 screws to the door trim.

(c) w/ Power Window:

Install the armrest with the 9 screws to the door trim.

w/o Power Window:

Install the armrest with the 7screws to the door trim.

(d) Install the door trim with retainers to the inside panel by tapping.

(e) w/ Power Window:

Connect the connectors and install the armrest panel.

(f) Install the 3 clips.

(g) Install the 2 screws to the armrest.

(h) Install the 2 caps to the armrest.

14. INSTALL DOOR INSIDE HANDLE

(a) Connect the handle to the control link.

(b) Push the inside handle in the door panel and slide it rearward.

(c) Install the screw.

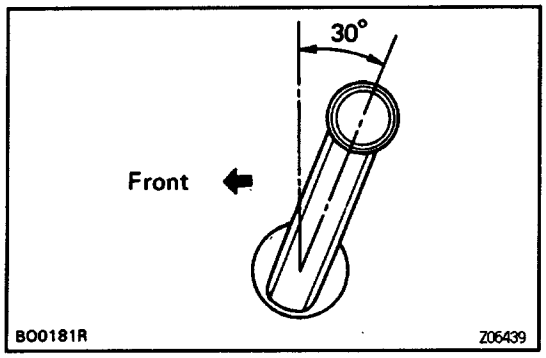

15. w/o Power Window:

INSTALL REGULATOR HANDLE

With door window fully closed, install the plate and the regulator handle with the snap ring, as shown.

BODY

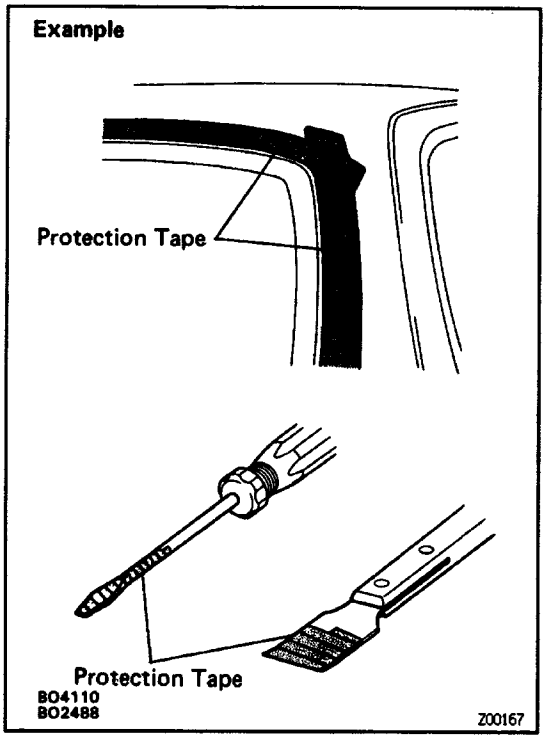

GENERAL INFORMATION

HANDLING PRECAUTIONS

Taping

When it is possible that the body or parts may be scratched during the operation, apply protection before starting work.

Example:

1. Before starting work, apply protection tape to body surfaces around parts to be removed and installed.
2. Before prying parts loose with a screwdriver to scraper etc., apply protection tape to the tip of the tool to avoid scratching parts or painted surfaces of the body.

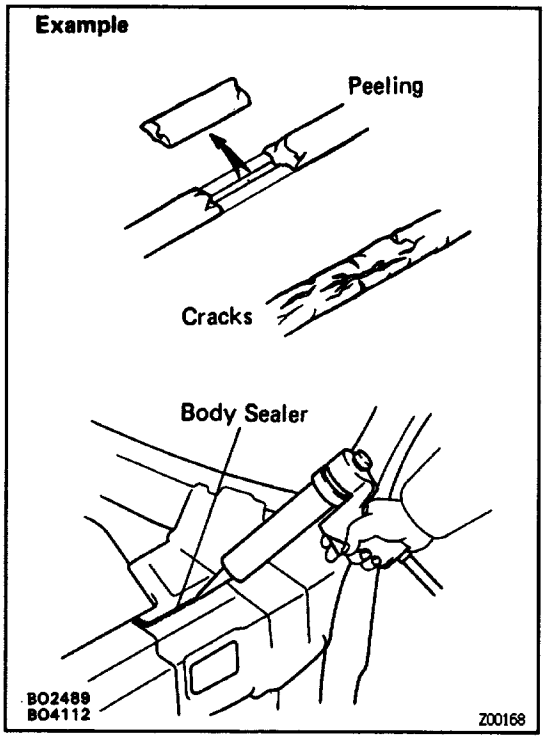

ANTI–RUST TREATMENT

Anti–rust treatment used on the vehicle body includes body sealer, undercoat, rust inhibitor and paint.
HINT: Refer to the Body Collision Damage Repair Manual for details of which parts have received anti-rust treatment.

Body Sealer

If the body sealer is damaged (peeling, cracks, etc.) during the operation, replace it with new body sealer.
HINT: If body sealer gets on other parts, promptly wipe it off with a clean cloth dipped in a grease, wax and silicone remover.

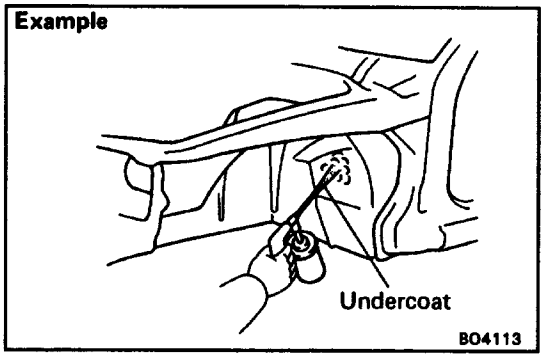

Undercoat

If the undercoat is damaged during the operation, apply new undercoat.
HINT:

- Cover the surrounding area with masking paper to avoid applying undercoat where it is not needed.

- Do not apply undercoat to high temperature parts such as the tailpipe, or to drive parts such as the drive shaft.

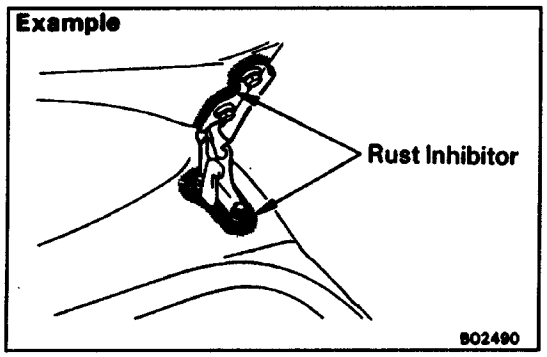

Rust Inhibitor
After removing and re–installing hinges and outer panel parts, apply rust inhibitor to the parts.
HINT: If rust inhibitor gets spilled on other parts, promptly wipe it off with a clean cloth dipped. in a grease, wax and silicon remover.

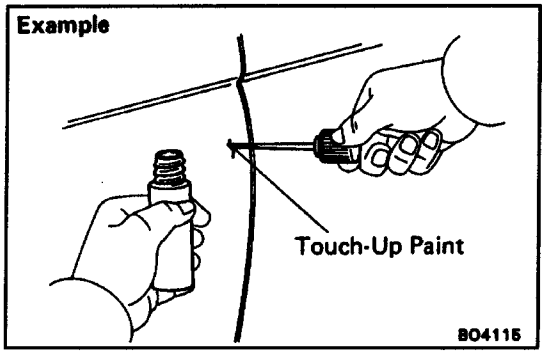

Touch –Up Point
If a small scratch is made in the body surface, correct the scratch using touch–up paint the same color as the body color.

CLIPS

The removal and installation methods of typical clips used in body parts are shown in the table below.
HINT: If the clip is damaged during the operation, always replace it with a new clip.

Shape (Example)	Removal/Installation
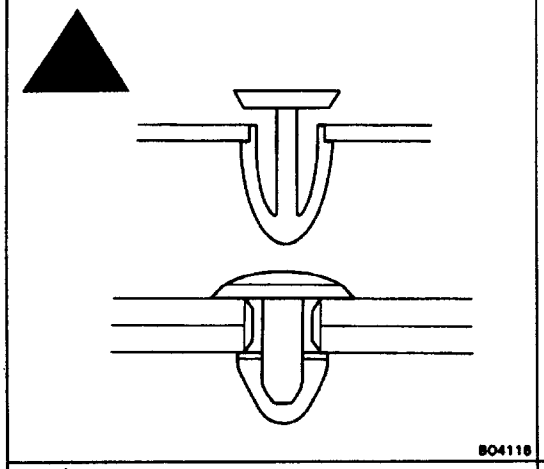 BO4116	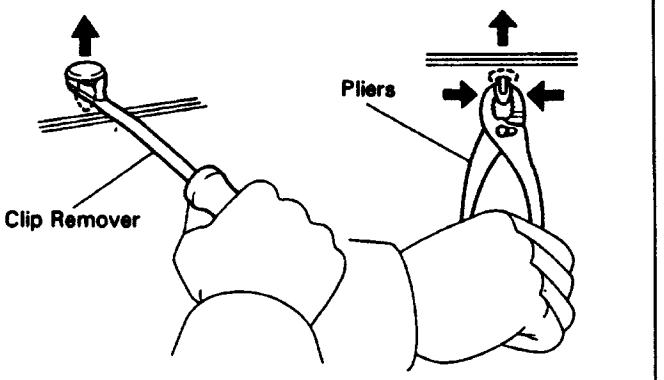 BO4117
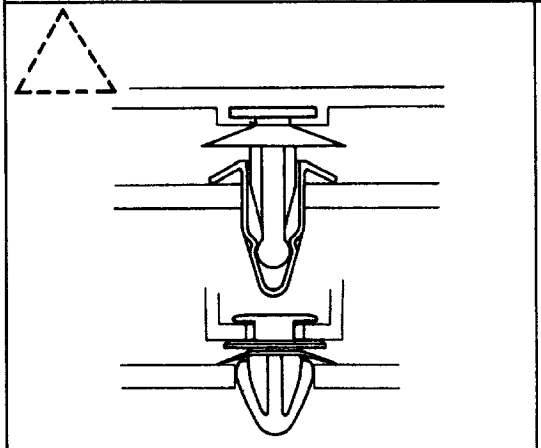 BO4118	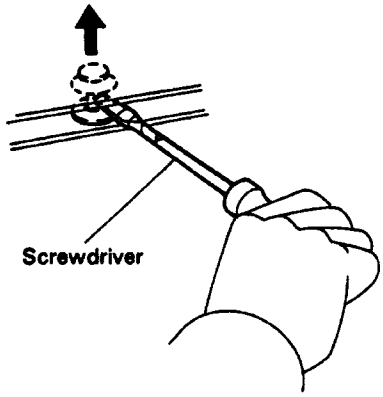 BO4119
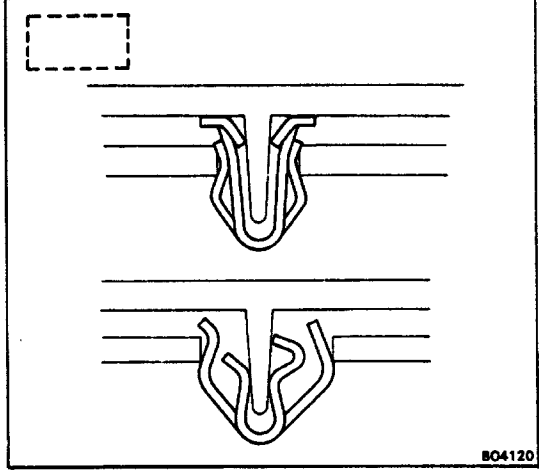 BO4120	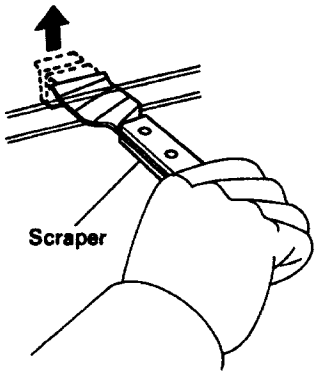 BO4121

CLIPS (Cont'd)

Shape (Example)	Removal/installation
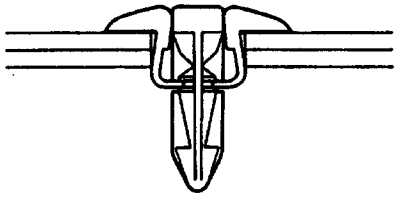 BO4122	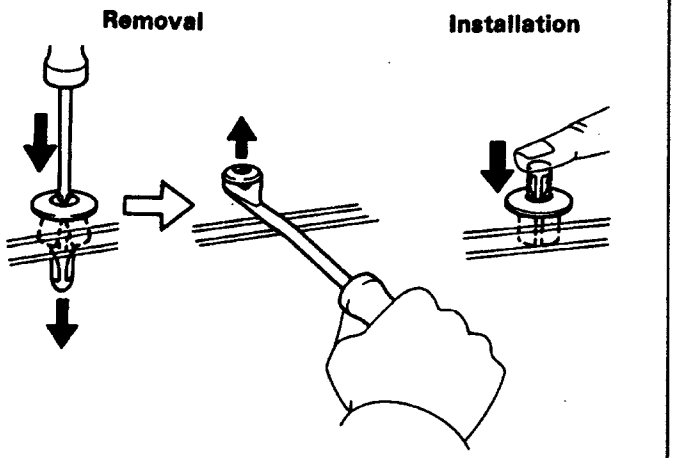 BO4123
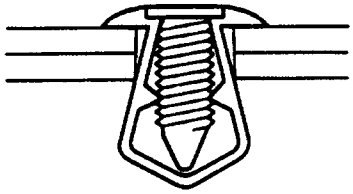 BO4124	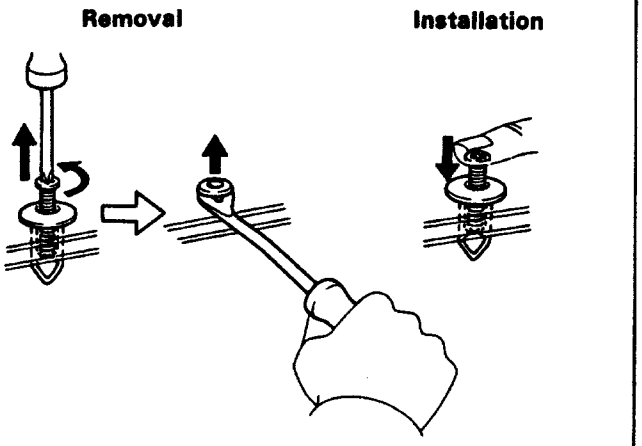 BO4125

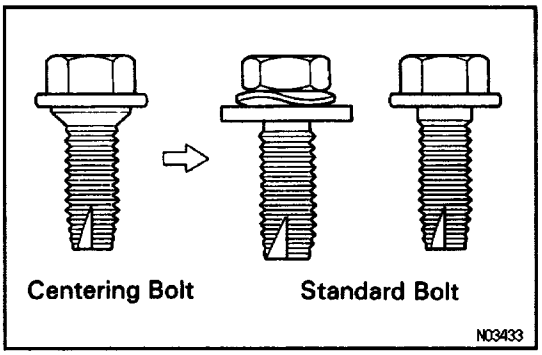

HOOD

HOOD ADJUSTMENT

HINT: Since the centering bolt is used as the hood hinge set bolt, the hood cannot be adjusted with it on. Substitute the bolt with the washer for the centering bolt.

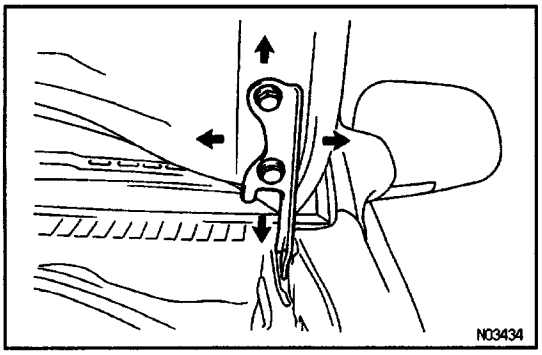

1. ADJUST HOOD IN FORWARD/ REARWARD AND LEFT/ RIGHT DIRECTIONS

Adjust the hood by loosening the hood side hinge bolts.

Torque: 23 N–m (230 kgf–cm, 17 ft–lbf)

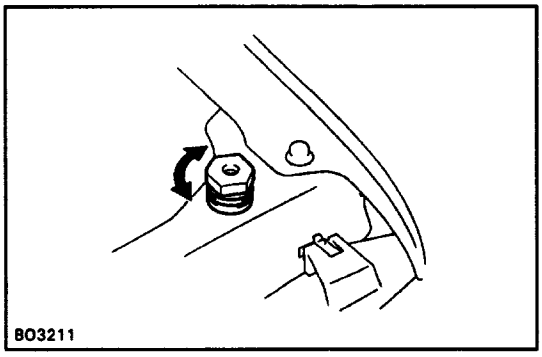

2. ADJUST FRONT EDGE OF HOOD IN VERTICAL DI–RECTION

Adjust the hood by turning the cushions.

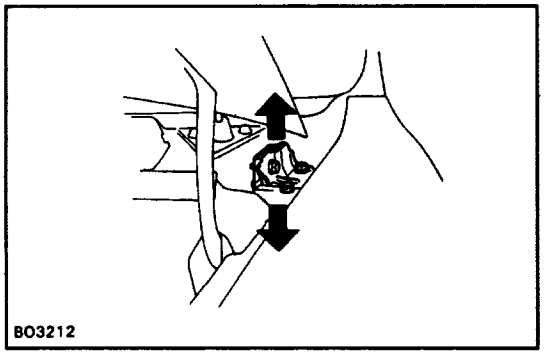

3. REMOVE WIPER ARMS

4. REMOVE COWL PANEL

Remove the 2 clips, 3 screws and the cowl panel.

5. ADJUST REAR EDGE OF HOOD IN VERTICAL DI–RECTION

Adjust the hood by loosening the hood hinge bolts.

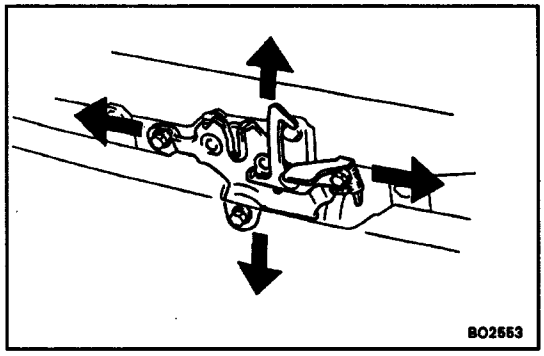

6. ADJUST HOOD LOCK

Adjust the lock by loosening the bolts.

Torque: 8.0 N–m (75 kgf–cm. 85 in.–lbf)

INSTRUMENT PANEL

COMPONENTS

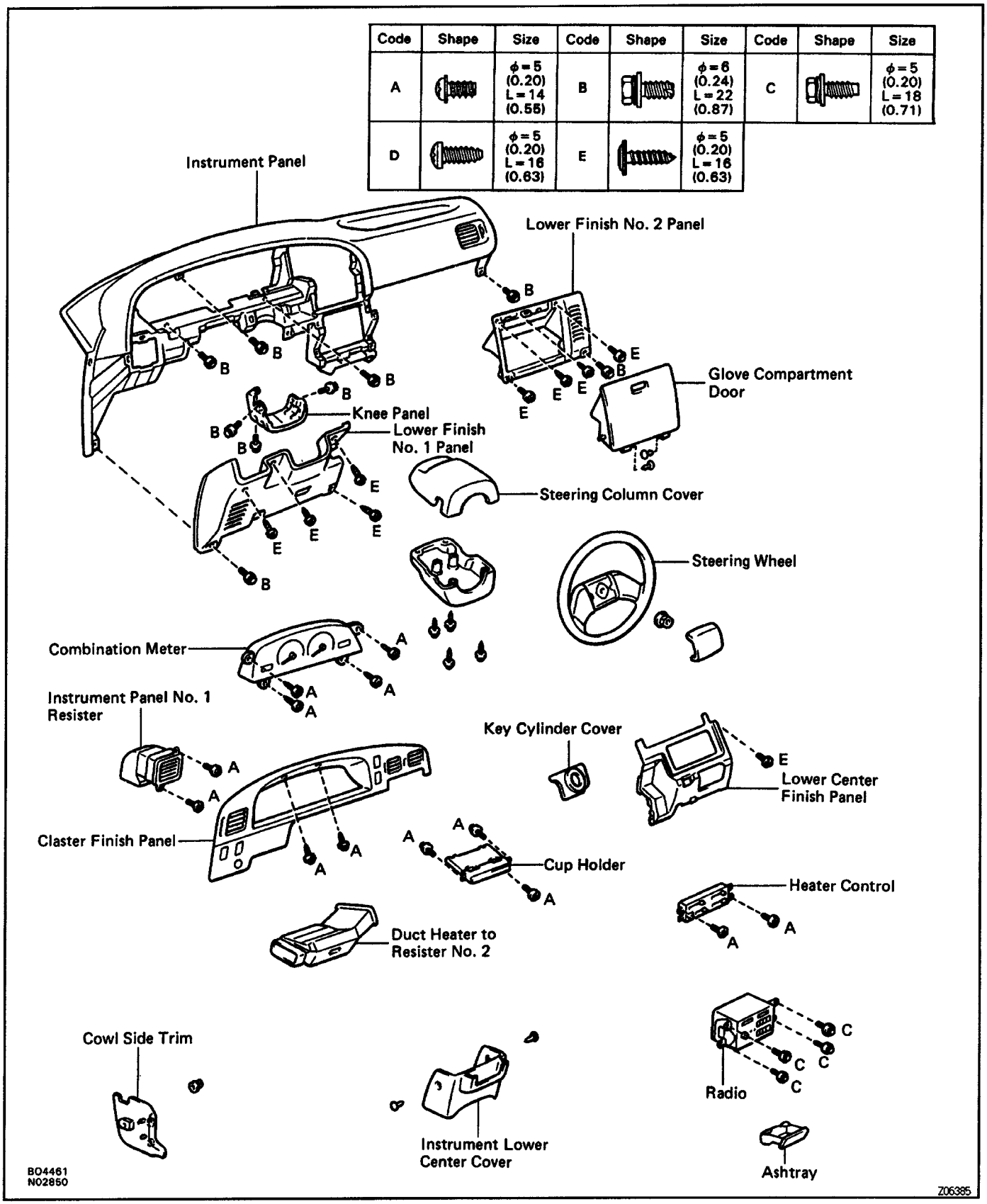

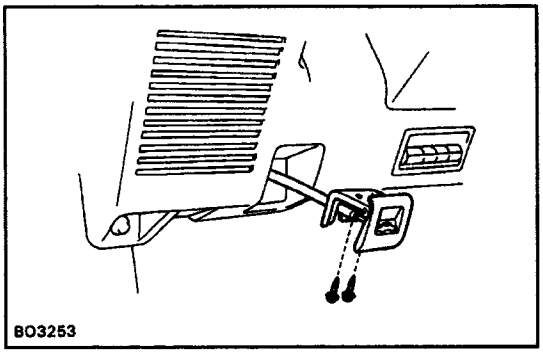

INSTRUMENT PANEL REMOVAL

1. DISCONNECT BATTERY CABLE FROM NEGATIVE (–)TERMINAL

2. REMOVE STEERING WHEEL

(See page SR–6)

3. REMOVE STEERING COLUMN COVERS

4. REMOVE ENGINE HOOD RELEASE LEVER

Remove the 2 screws and the engine hood release lever.

5. REMOVE COWL SIDE TRIM

Remove the nut and the cowl side trim.

6. REMOVE INSTRUMENT LOWER CENTER COVER

Remove the 2 clips and the cover.

7. REMOVE KEY CYLINDER COVER

Pry out the key cylinder cover.

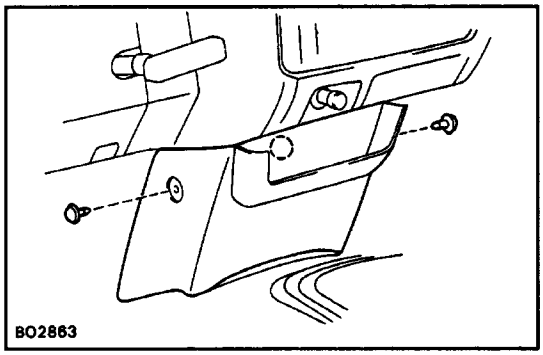

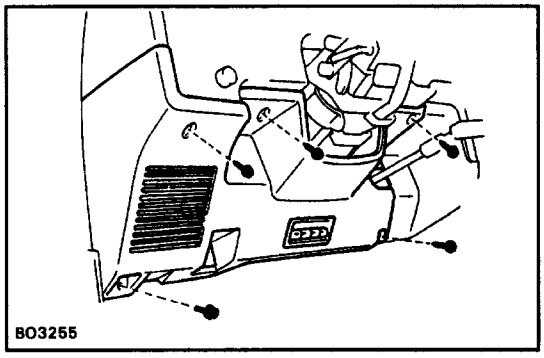

8. REMOVE LOWER FINISH NO. 1 PANEL

(a) Remove the 4 screws, the bolt and the panel.

(b) Disconnect the connector.

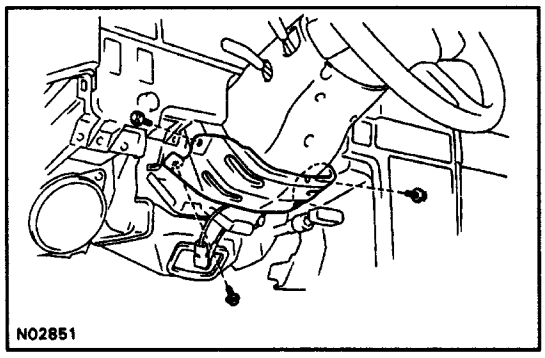

9. REMOVE KNEE PANEL

Remove the 3 bolts and the cover.

10. REMOVE DUCT HEATER TO RESISTER NO. 2

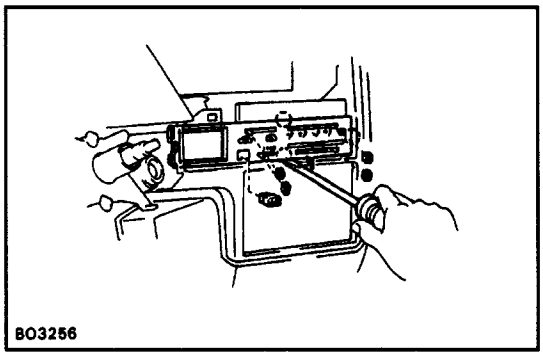

11. REMOVE HEATER CONTROL PLATE

(a) Pull off the heater control knobs.

(b) w/ A/C:

Pry oft the A/C switch.

(c) Using a screwdriver, pry out the heater control plate, as shown in the illustration, and remove it.

HINT: Tape the screwdriver tip before use.

(d) w/ Clock:

Disconnect the connector.

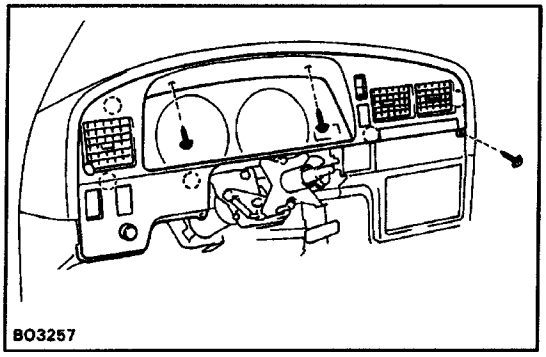

12. REMOVE CLUSTER FINISH PANEL

(a) Remove the 3 screws and pull out the cluster finish panel.
(b) Disconnect the connectors.
(c) Remove the 2 screws and the cup holder from the cluster finish panel.

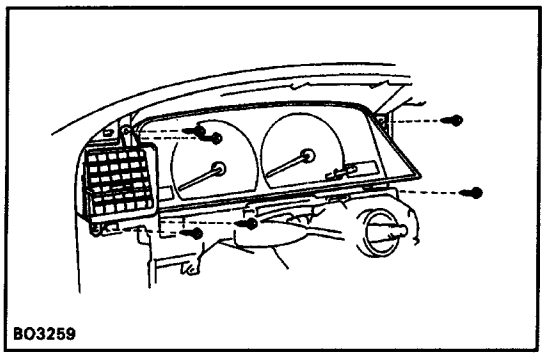

13. REMOVE INSTRUMENT PANEL NO. 1 REGISTER

Remove the 2 screws and the register.

14. REMOVE COMBINATION METER

(a) Remove the 4 screws.
(b) Disconnect the connectors and speedometer cable.
(c) Remove the combination meter.

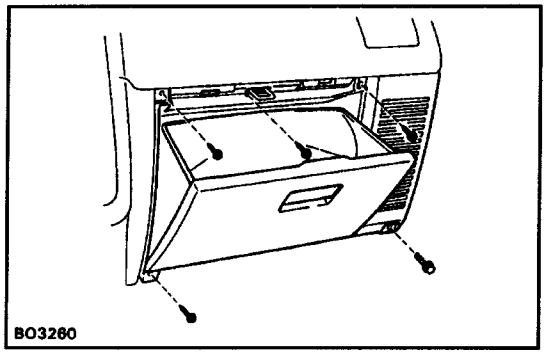

15. REMOVE LOWER FINISH NO. 2 PANEL WITH GLOVE COMPARTMENT DOOR

(a) Remove the 4 screws, the bolt and the lower finish No. 2 panel with glove compartment door.
(b) Disconnect the connector.

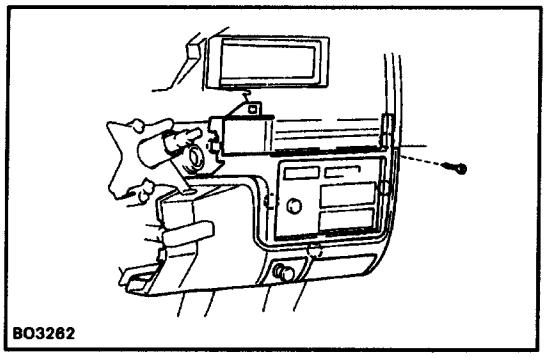

16. REMOVE LOWER CENTER FINISH PANEL

(a) Remove the screw and pull out the panel.
(b) Disconnect the connectors.

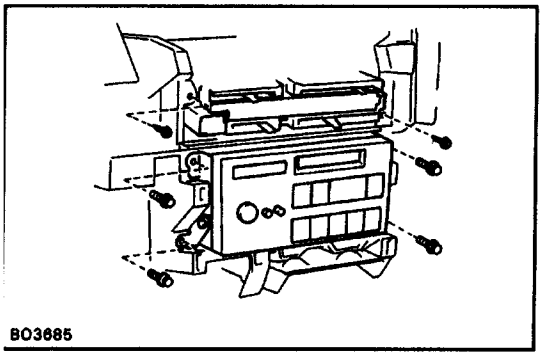

17. REMOVE HEATER CONTROL

Remove the 2 screws and hang the heater control.

18. REMOVE RADIO

(a) Remove the 4 screws.
(b) Disconnect the antenna cable and connectors.
(c) Remove the radio with bracket.

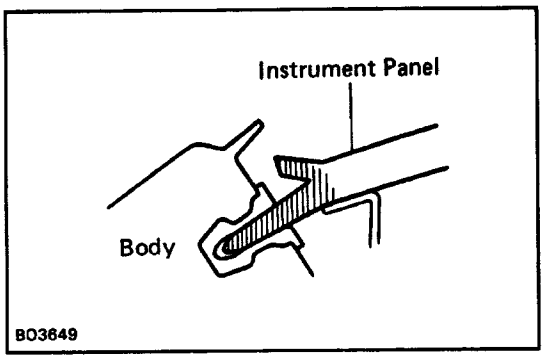

19. REMOVE INSTRUMENT PANEL

(a) Remove the 4 bolts and the instrument panel.

(b) Disconnect the connectors.

HINT: The instrument panel has a boss onto the clip on the body side. Therefore when removing, pull upward at an angle.

20. REMOVE THESE PARTS FROM INSTRUMENT PANEL

(a) Safety pad

(b) No. 3, No. 5 heater to register ducts

(c) Instrument panel No. 2 register

(d) Center bracket

(e) Cowl bracket

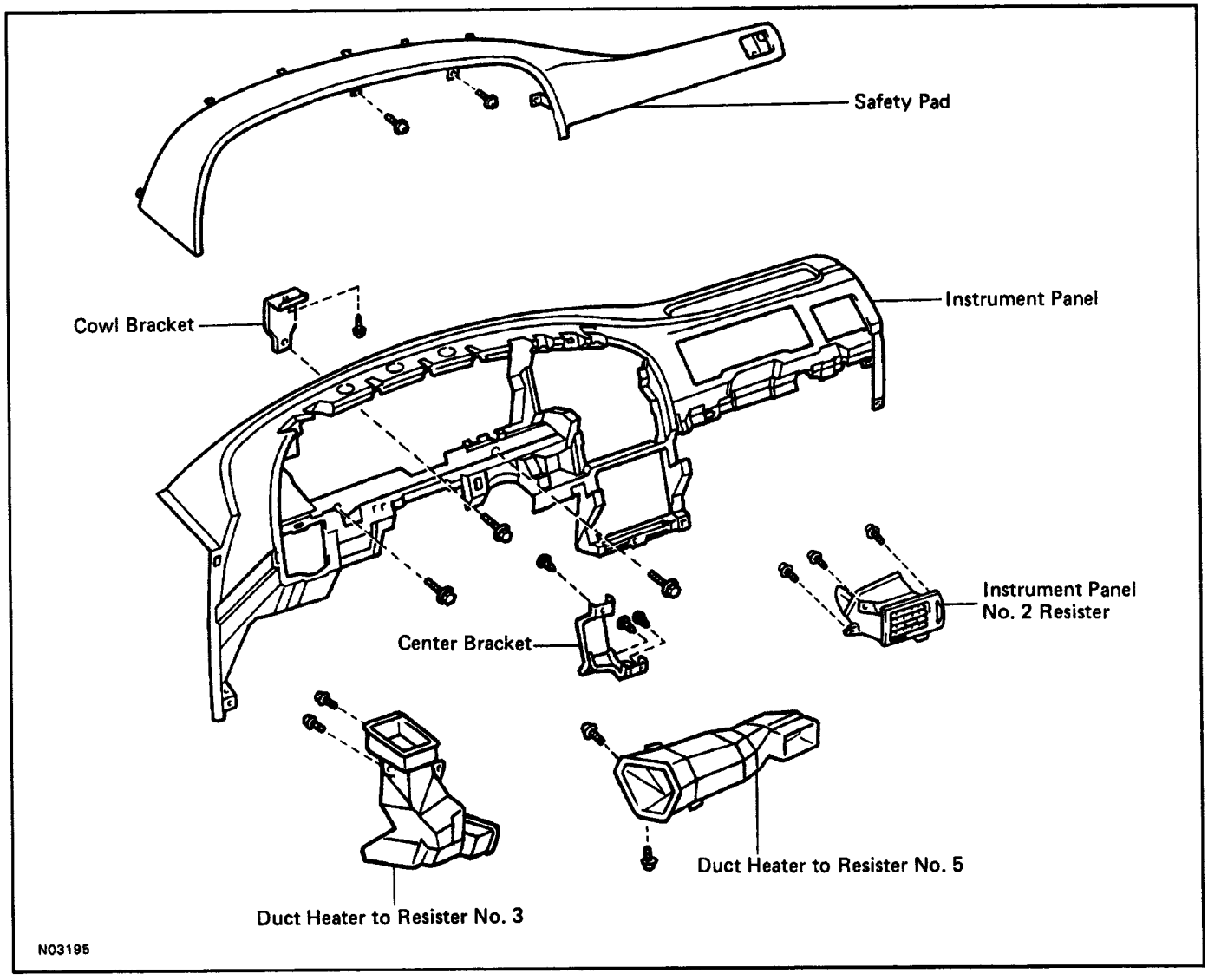

INSTRUMENT PANEL INSTALLATION

INSTALL INSTRUMENT PANEL PARTS FOLLOW–ING REMOVAL SEQUENCE IN REVERSE

PREPARATION

SST (SPECIAL SERVICE TOOLS)

	09812–00020 Door Hinge Set Bolt Wrench	

LUBRICANT

Item	Capacity	Classification
MP grease	–	–

SSM (SPECIAL SERVICE MATERIALS)

08833–00030	Three cement black or equivalent	Windshield Moulding Back Wind Moulding Windshield Back Window Glass
08833–00070	Adhesive 1324, THREE BOND 1324 or equivalent	Front Door
08850–00065	Butyl Tape Set	Quarter Window
08850–00070	Windshield glass adhesive set No. 15 or equivalent	Windshield Back Window Glass (0–15˚C or 32–59˚ F)
08850–00080	Windshield glass adhesive set No.35 or equivalent	Windshield Back Window Glass (35–45˚C or 59–95˚F)
08850–00090	Windshield glass adhesive set No.45 or equivalent	Windshield Back Window Glass (35–45˚C or 95–113˚ F)

Ambient temperature	Part No.	Part Name
0 – 15°C (32 – 59°F)	08850-00070	Windshield glass adhesive set No. 15
15 – 35°C (59 – 95°F)	08850-00080	Windshield glass adhesive set No. 35
35 – 45°C (95 – 113°F)	08850-00090	Windshield glass adhesive set No. 45

V00250

1. CHOOSE SUITABLE ADHESIVE SET

Use an adhesive set suitable for the ambient temperature.

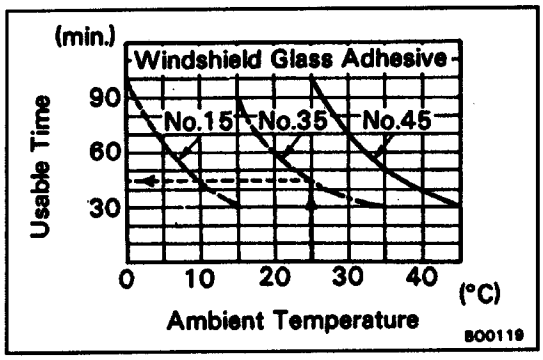

2. CHECK ADHESIVE USABLE TIME

After mixing main and hardening agents, finish glass installation within the specified time, as shown.

Example: For glass installation in an ambient temperature of 25˚C (77˚F), apply adhesive set No. 35 within 45 minutes.

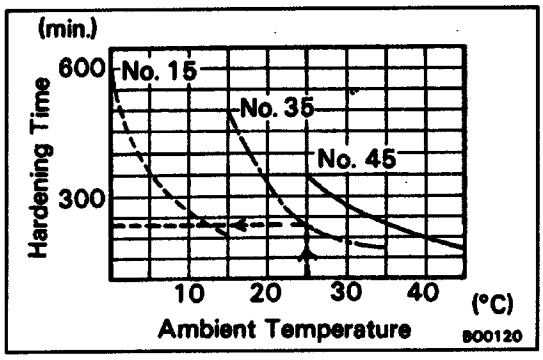

3. CHECK ADHESIVE HARDENING TIME

After main and hardening agents are mixed, leak tests should be made only after the hardening time has elapsed.

Example: The hardening time for adhesive set No. 35 with ambient temperature of 25˚C (77˚ F) is 2 and 1 / 2 hours.

NOTICE: Do not drive the vehicle until at least double the hardening time has elapsed.

QUARTER WINDOW GLASS

COMPONENTS

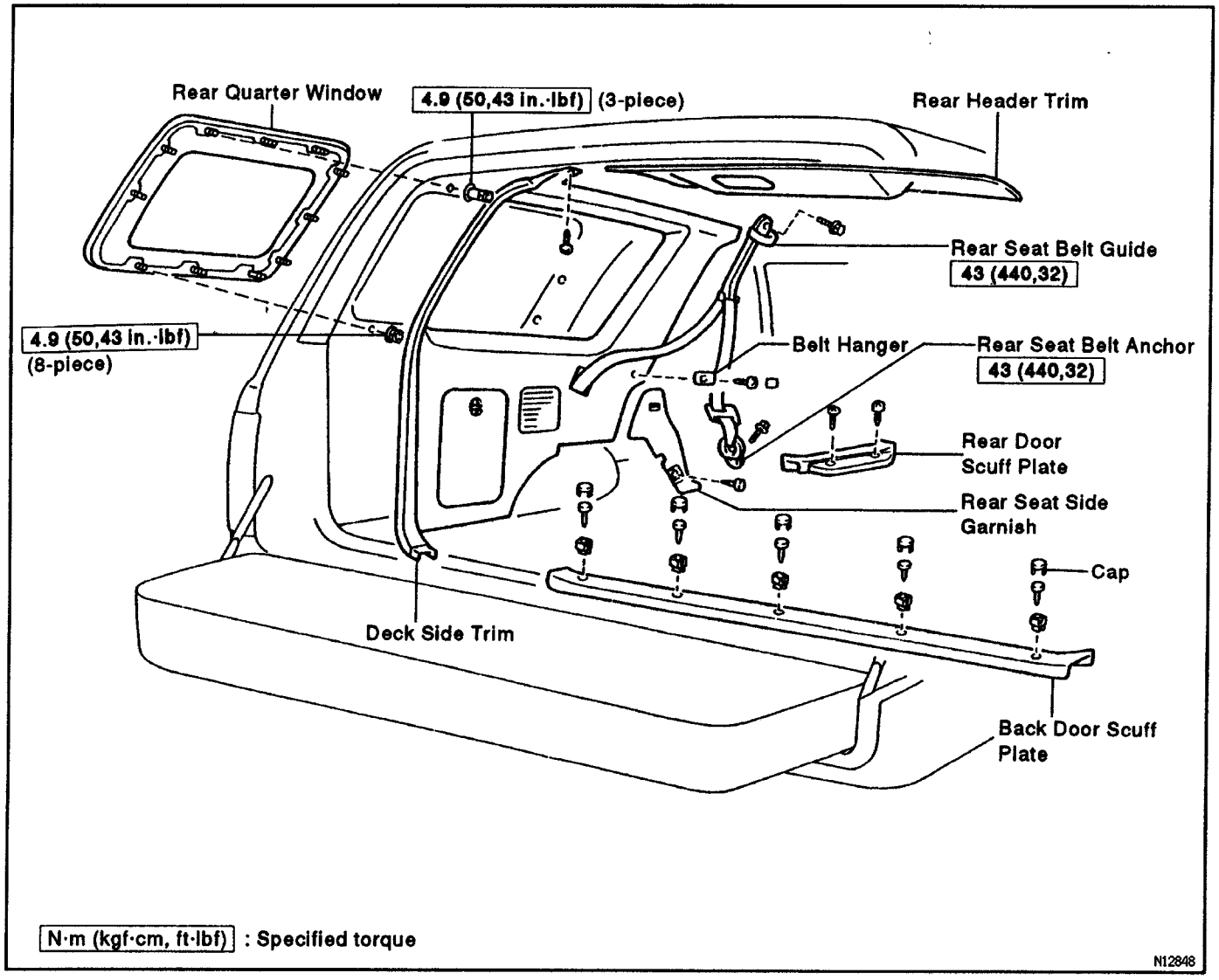

REAR QUARTER WINDOW REMOVAL

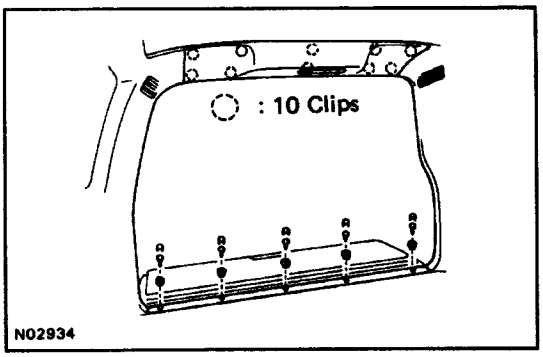

1. REMOVE REAR HEADER TRIM AND BACK DOOR SCUFF PLATE

(a) Remove the rear header trim and the connector.
(b) Remove the 5 caps, screws and the back door scuff plate.

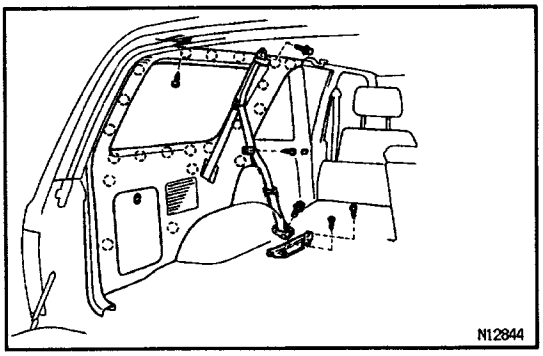

2. REMOVE DECK SIDE TRIM

(a) Remove the screw with the deck side trim.
(b) Remove the 2 bolts, the rear seat belt anchor and the belt guide.
(c) Remove the screw and the belt hanger.
(d) Remove the 2 screws and the rear door scuff plate.

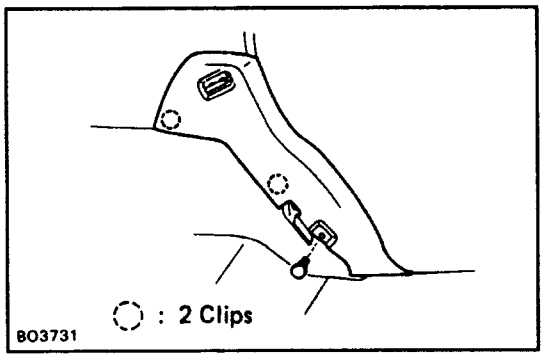

(d) Remove the clip and the rear seat side garnish.
(e) Remove the screw and the deck side trim.

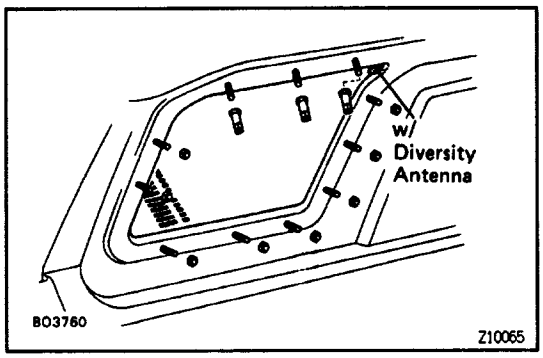

3. REMOVE REAR QUARTER WINDOW

(a) w/ Diversity Antenna:
Disconnect the connector.
(b) Remove the 11 nuts.
(c) Using a knife, cut loose a sealer between the glass and the body panel.

NOTICE: Do not damage the body and the glass.

REAR QUARTER WINDOW INSTALLATION

1. PREPARE ITEMS LISTED

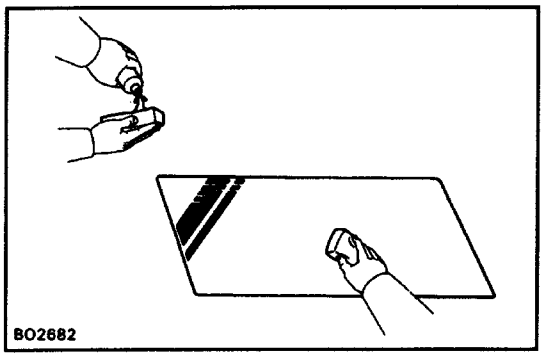

2. CLEAN BODY AND GLASS

Wipe off any adhesive left on the body and glass with cleaner.

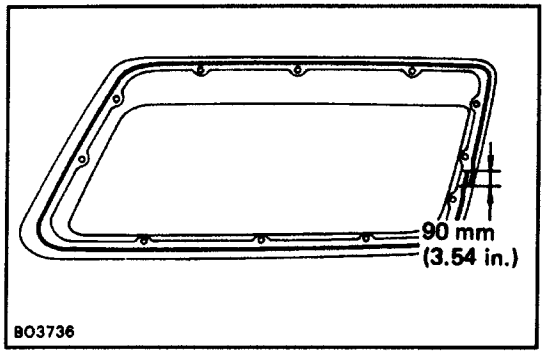

3. INSTALL REAR QUARTER WINDOW

(a) Install the butyl tape to the glass.

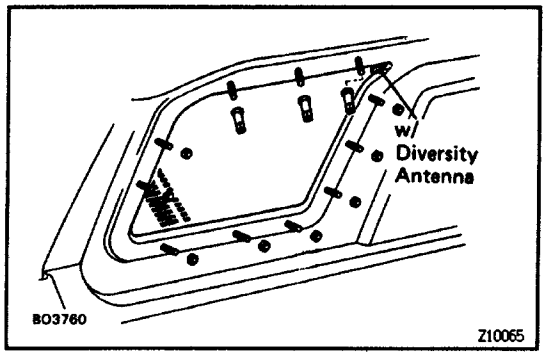

(b) Place the bolts of retainers into the body holes.
(c) Tap the glass by hand.
(d) Install the 11 nuts.

Torque: 4.9 N–m (50 kgf–cm, 43 in.–lbf)

NOTICE: Do not exceed the specified torque.

(e) w/Diversity Antenna:
Connect the connectors.

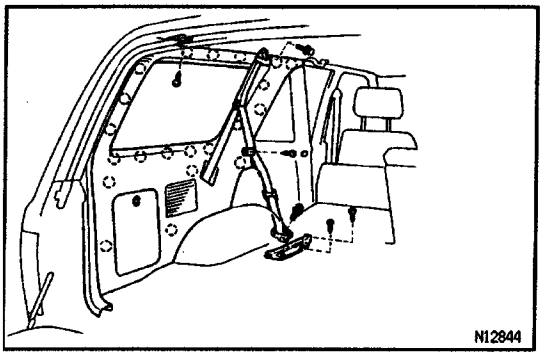

4. INSTALL DECK SIDE TRIM

(a) Install the deck side trim with the screw.
(b) Install the rear seat side garnish with the clip.
(c) Install the rear door scuff plate with the 2 screws.
(d) Install the belt hanger with the screw.
(e) Install the rear seat belt guide and the belt anchor with the 2 bolts.

Torque: 43 N–m (440 kgf–cm, 32 ft–lbf)

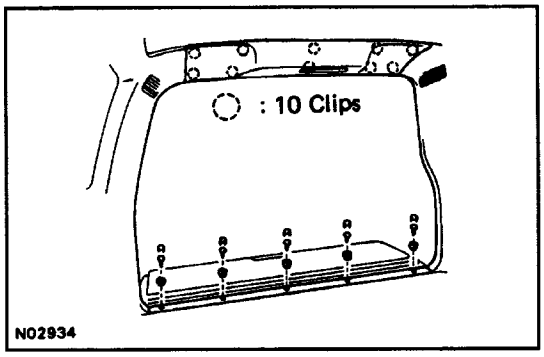

5. INSTALL REAR HEADER TRIM AND BACK DOOR SCUFF PLATE

(a) Connect the connector.
(b) Install the rear header trim.
(c) Install the back door scuff plate with the 5 screws.
(d) Install the 5 caps.

REAR DOOR
COMPONENTS

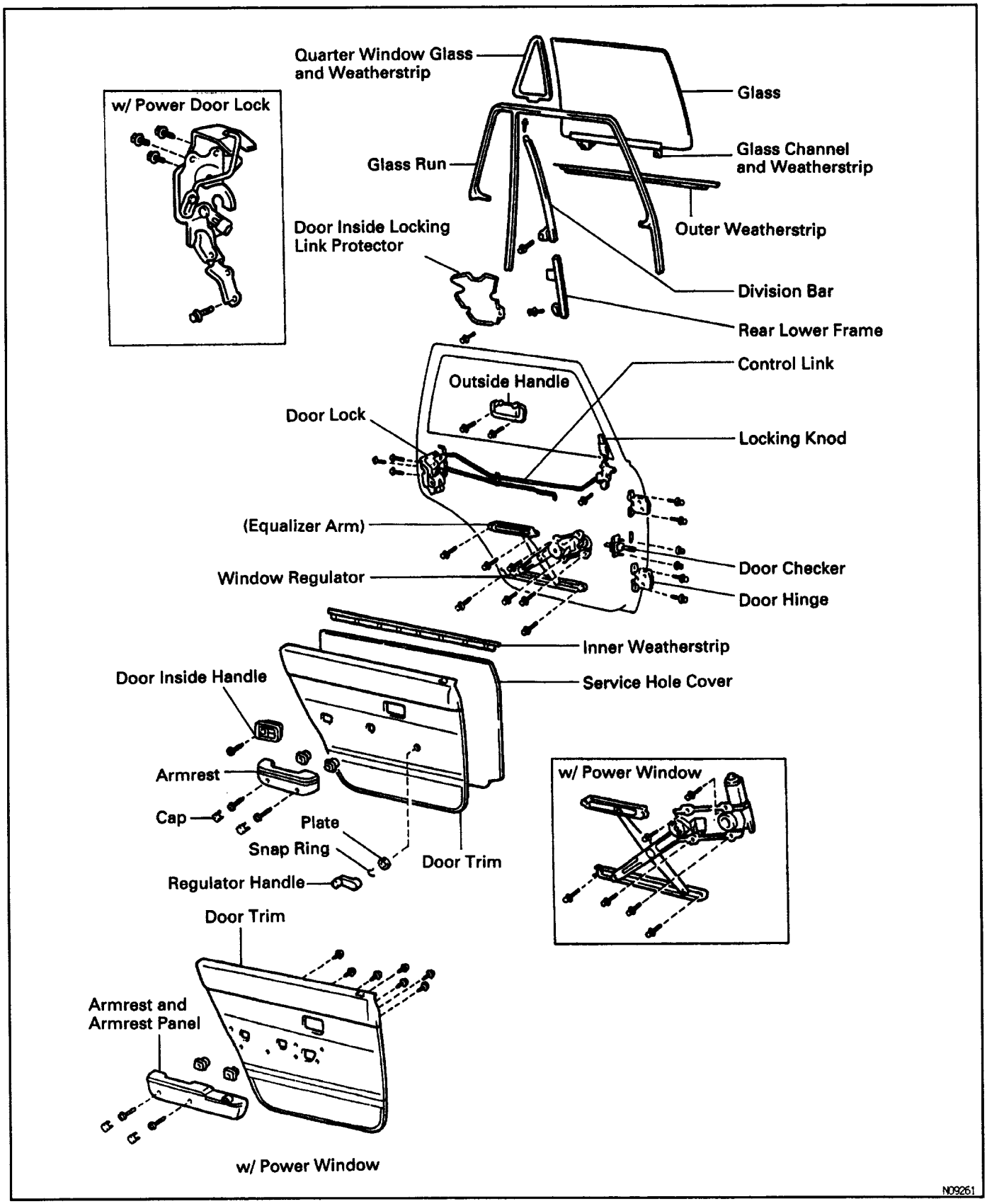

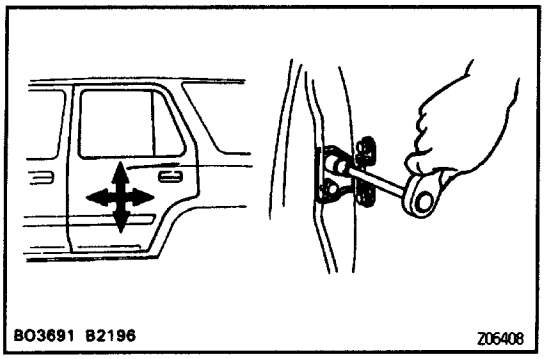

REAR DOOR ADJUSTMENT

1. ADJUST DOOR IN FORWARD/ REARWARD AND VERTICAL DIRECTIONS

(Upper Side)

Loosen the body side hinge nuts to adjust.

(Lower Side)

Loosen the body side hinge bolts to adjust.

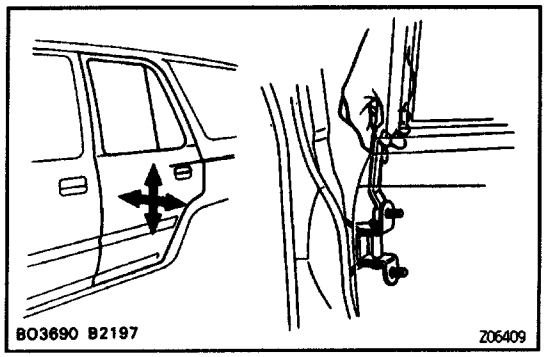

2. ADJUST DOOR IN LEFT/ RIGHT AND VERTICAL DIRECTIONS

Loosen the door side hinge bolts to adjust.

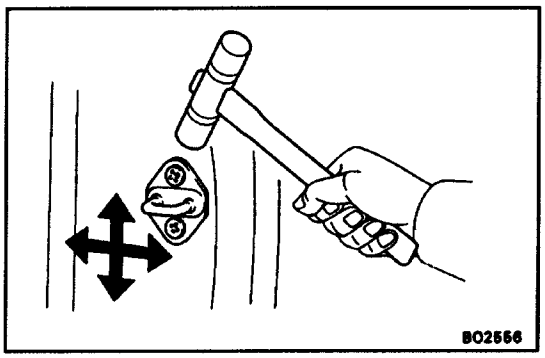

3. ADJUST DOOR LOCK STRIKER

(a) Check that the door fit and door lock linkages are adjusted correctly.

(b) Adjust the striker position by slightly loosening the striker mounting screws, and hitting the striker with a hammer.

(c) Tighten the striker mounting screws again.

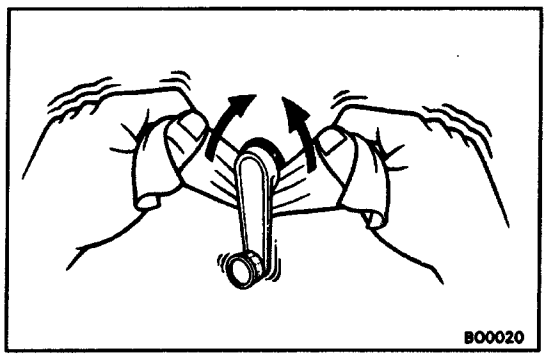

REAR DOOR DISASSEMBLY

1. w/o Power Window:

REMOVE REGULATOR HANDLE

Pull off the snap ring with a cloth and remove the regulator handle and the plate.

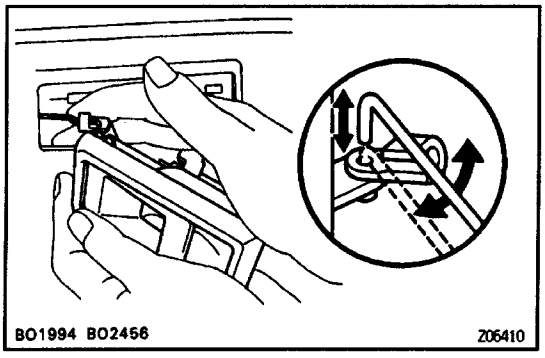

2. REMOVE DOOR INSIDE HANDLE

(a) Remove the screw, and slide the handle forward.

(b) Disconnect the handle from the control link and remove the handle.

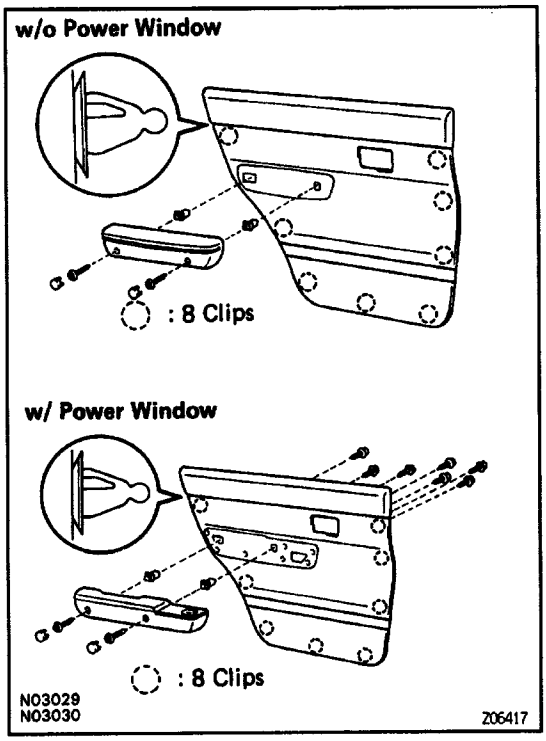

3. REMOVE DOOR TRIM

(a) Remove the 2 caps from the armrest.

(b) w/ Power Window:

Remove the 2 screws from the armrest.

w/o Power Window:

Remove the 2 screws and the armrest.

(c) w/ Power Window:

Remove the armrest panel by pulling upward, then disconnect the connectors.

(d) Insert the screwdriver between the retainers and door trim to pry it loose.

HINT: Tape the screwdriver tip before use.

(e) Remove the door trim.

(f) w/ Power Window:

Remove the 7 screws and the armrest from the door trim.

(g) Remove the inner weatherstrip from the door trim.

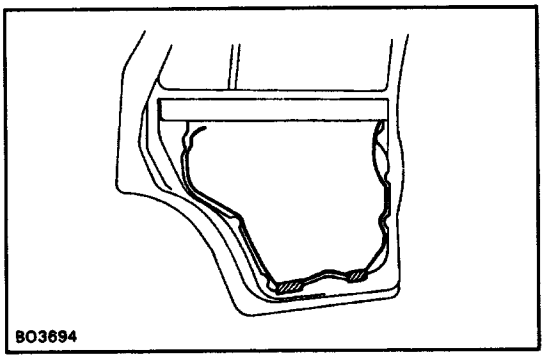

4. REMOVE SERVICE HOLE COVER

5. REMOVE OUTER WEATHERSTRIP

Pry loose the clips from the edge of the panel, and remove the outer weatherstrip.

6. REMOVE DIVISION BAR AND REAR LOWER FRAME

(a) Remove the glass run from the division bar.

(b) Remove the screw under the weatherstrip.

(c) Remove the 3 bolts from the door panel.

(d) Pull out the division bar and the rear lower frame.

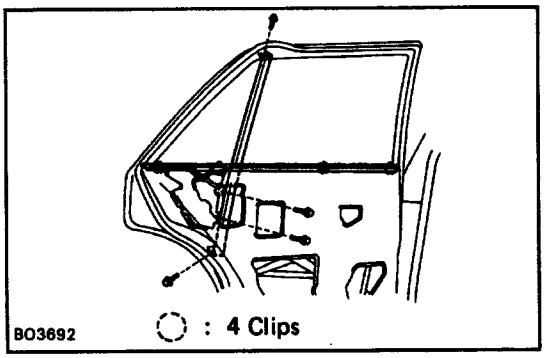

7. REMOVE QUARTER WINDOW GLASS WITH WEATHERSTRIP

Remove the quarter window glass together with the weatherstrip by pulling it forward.

8. REMOVE DOOR INSIDE LOCKING LINK PROTECTOR

9. REMOVE GLASS RUN

10. REMOVE INSIDE LOCKING KNOB AND CONTROL LINK

(a) Disconnect the control links from the locking knot and door lock.

(b) Remove the inside locking knob.

(c) Remove the screw and the control link.

11. REMOVE DOOR LOCK AND OUTSIDE HANDLE

(a) Disconnect the link from the outside handle.

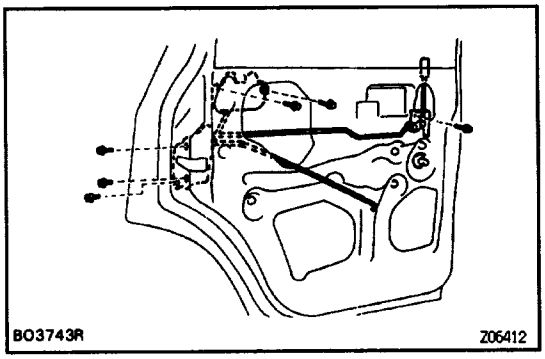

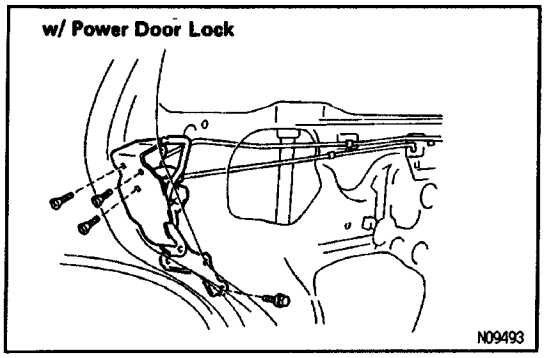

(b) w/ Power Door Lock:
Disconnect the connector, remove the 3 screws, bolt and the door lock with the motor.
w/o Power Door Lock:
Remove the 3 screws and the door lock.
(c) Remove the 2 bolts and the outside handle.

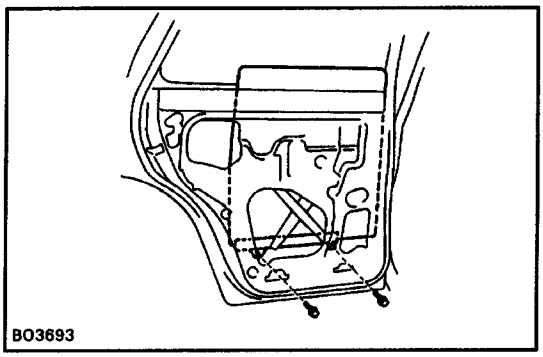

12. REMOVE DOOR GLASS AND WINDOW REGULATOR
(a) Remove the 2 glass channel mounting bolts.
(b) Place the glass in the door cavity.

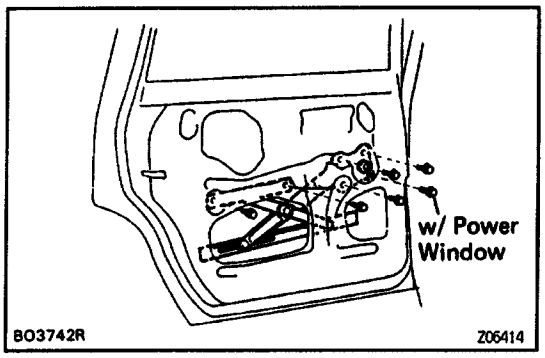

(c) Remove the 2 equalizer arm bracket mounting bolts.
(d) w/ Power Window:
Disconnect the connector, then remove the 4 regulator mounting bolts.
w/o Power Window:
Remove the 3 regulator mounting bolts.
(e) Remove the regulator through the service hole.
(f) Remove the glass by pulling it upward.

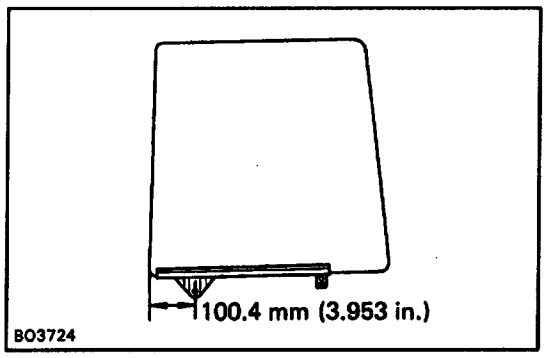

GLASS REPLACEMENT

1. REMOVE GLASS CHANNEL WITH SCREWDRIVER OR LIKE OBJECT
2. APPLY SOAPY WATER TO INSIDE OF WEATHERSTRIP
3. INSTALL CHANNEL BY TAPPING IT WITH PLASTIC HAMMER

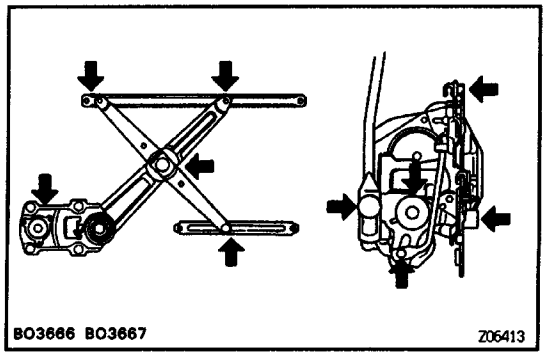

REAR DOOR ASSEMBLY

1. BEFORE INSTALLING PARTS COAT THEM WITH MP GREASE
(a) Apply MP grease to the sliding surface and gears of the window regulator.
NOTICE: Do not apply MP grease to the spring of the window regulator.

(b) Apply MP grease to the sliding surface of the door lock.

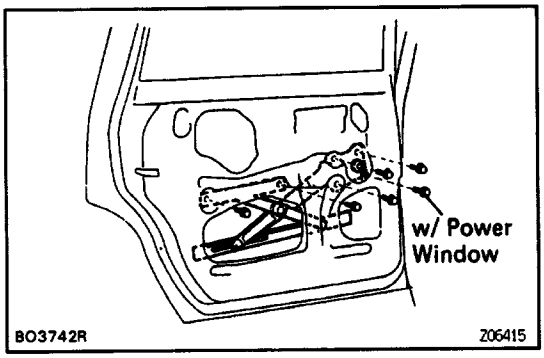

2. INSTALL WINDOW REGULATOR AND DOOR GLASS

(a) Place the glass in the door cavity.
(b) Place the regulator through the service hole.
(c) w/ Power Window:
Install the 4 regulator mounting bolts, then connect the connector.
w/o Power Window:
Install the 3 regulator mounting bolts.
(d) Install the equalizer arm and temporarily tighten the 2 equalizer arm mounting bolts.
(e) Attach the glass to the window regulator with the 2 bolts.

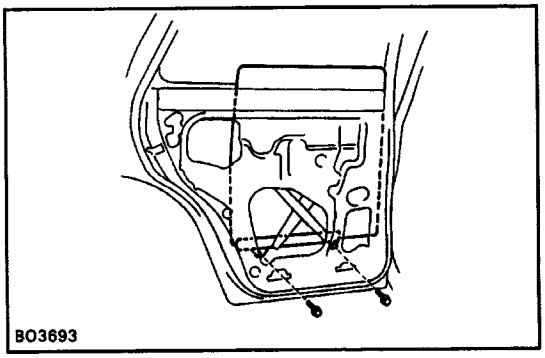

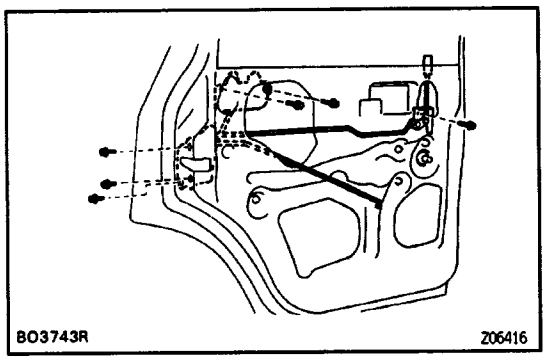

3. INSTALL OUTSIDE HANDLE AND DOOR LOCK

(a) Install the handle with the 2 bolts.
(b) w/ Power Door Lock:
Install the door lock with the 3 screws and bolt, theN connect the connector.
w/o Power Door Lock:
Install the door lock with the 3 screws.
(c) Connect the links to the outside handle.

4. INSTALL LOCKING KNOB AND CONTROL LINK

(a) Install the inside locking knob.
(b) Connect the control link to the door lock and locking knob.
(c) Install the control link with the screw.

5. INSTALL GLASS RUN

6. PLACE DOOR INSIDE LOCKING LINK PROTECTOR

7. INSTALL QUARTER WINDOW GLASS WITH WEA THERSTRIP

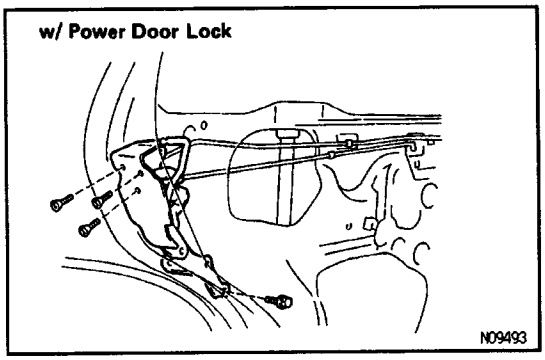

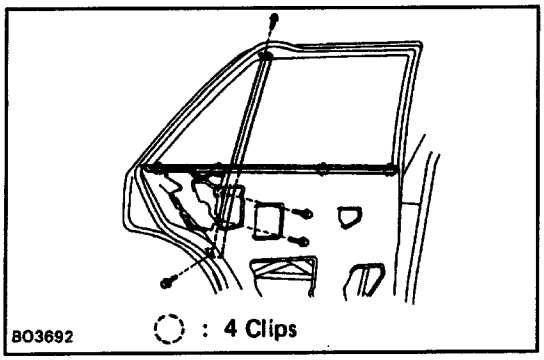

8. INSTALL REAR LOWER FRAME AND DIVISION BAR

(a) Install the rear lower frame and the division bar with the screw and the 3 bolts.

(b) Install the glass run to the division bar and the frame.

9. INSTALL OUTER WEATHERSTRIP

Insert the claw of the clips into the upper panel slit and push the weatherstrip onto the panel.

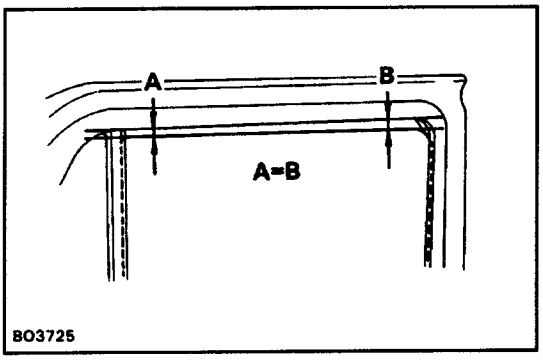

10. ADJUST DOOR GLASS

Adjust the equalizer arm up or down and tighten it where dimensions A and6, as shown are equal.

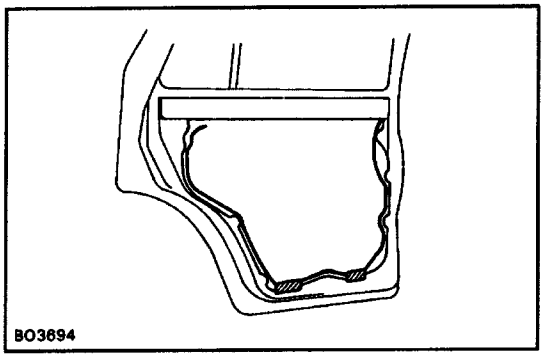

11. INSTALL SERVICE HOLE COVER

(a) Seal the service hole cover with adhesive.

(b) Insert the lower edge of the service hole cover into the panel slit.

(c) Seal the panel slit with the cotton tape.

NOTICE: Do not block the trim clip sealing with the tape.

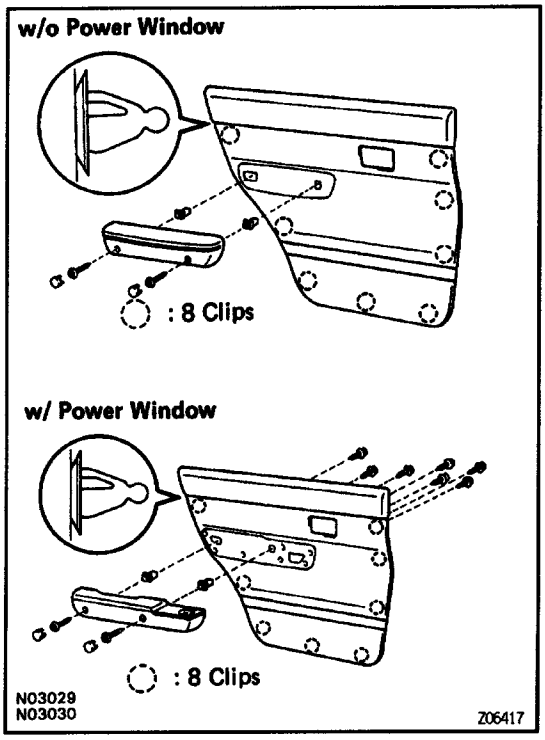

12. INSTALL DOOR TRIM

(a) Install the inner weatherstrip to the door trim.

(b) w/ Power Window:
Install the armrest with the 7 screws to the door trim.

(c) Install the door trim with retainers to the inside panel by tapping.

(d) w/ Power Window:
Connect the connectors and install the armrest panel.

(e) w/ Power Window:
Install the 2 screws to the armrest.
w/o Power Window:
Install the armrest with the 2 screws.

(f) Install the 2 caps to the armrest.

13. INSTALL DOOR INSIDE HANDLE

(a) Connect the handle to control link.

(b) Push the inside handle in the door panel, and slide it rearward.

(c) Install the screw.

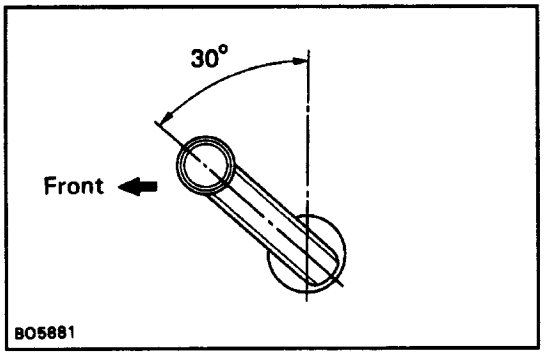

14. w/o Power Window:

INSTALL REGULATOR HANDLE

With door window fully closed, install the plate and regulator handle with the snap ring, as shown.

SEAT

COMPONENTS

Front Seat

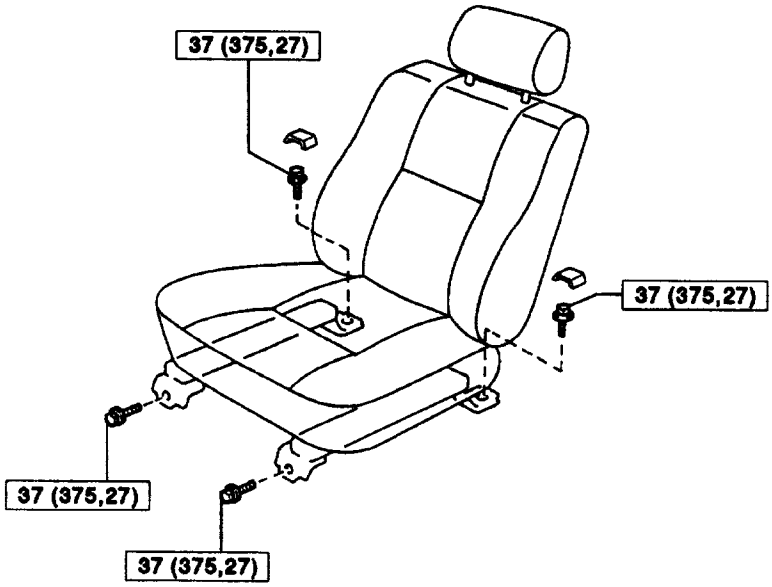

Rear Seat

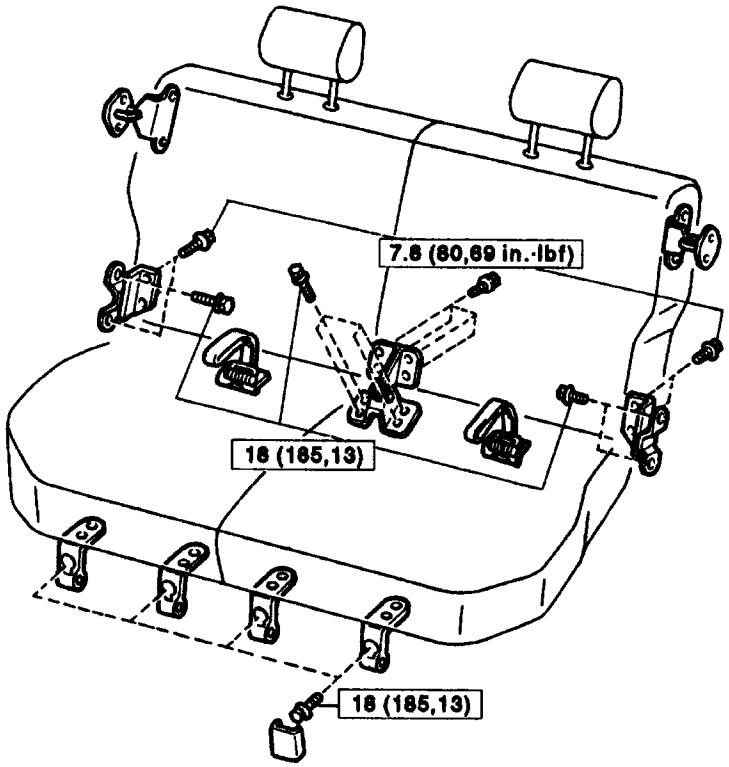

N·m (kgf·cm, ft·lbf) : Specified torque

N12846
B03732
Z14633

SEAT BELT

COMPONENTS

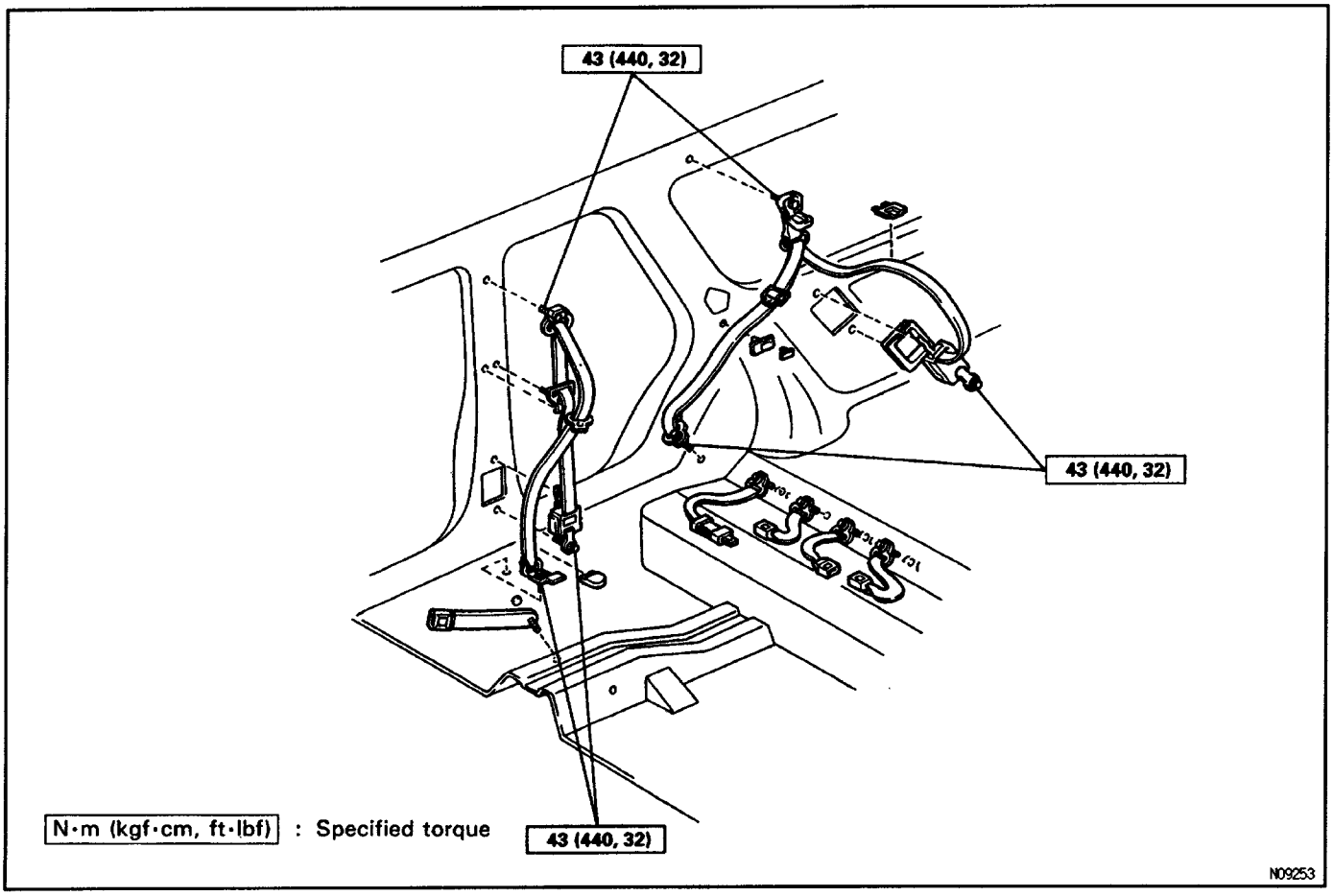

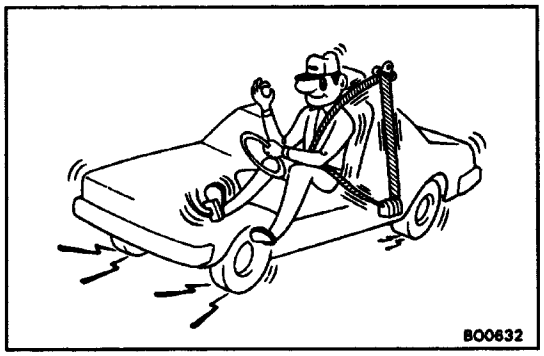

SEAT BELT INSPECTION

Emergency Locking Retractor (ELR) and Automatic Locking Retractor (ALR) type

1. RUNNING TEST (IN SAFE AREA)

all seat belts:

(a) Fasten the seat belts.

(b) Drive the car at 10 mph (16 km/h) and make a very hard stop.

(c) Check that the seat belt is locked and cannot be extended at this time.

HINT: Conduct this test in a safe area. If the belt does not lock, remove the belt mechanism assembly and conduct the following static check. Also, whenever installing a new belt assembly, verify the proper operation before installation.

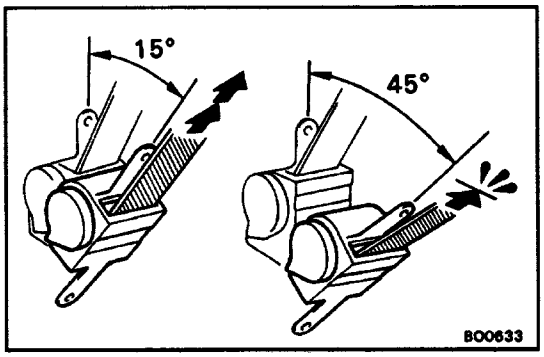

2. STATIC TEST

all seat belts:

(a) Verify that the belt locks when pulled out quickly.

(b) Remove the locking retractor assembly.

(c) Tilt the retractor slowly.

(d) Verify that the belt can be pulled out at a tilt of 15 degrees or less, and cannot be pulled out at over 45 degrees of tilt.

If a problem is found, replace the assembly.

except driver's seat belts:

(e) Pull out the whole belt, release it slightly and then pull it out again.

(f) Verify that the belt cannot be extended further.

If a problem is found, replace the assembly.

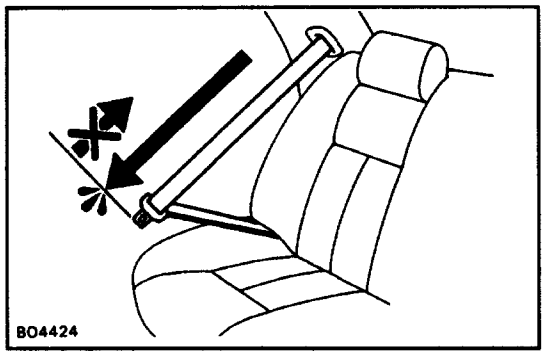

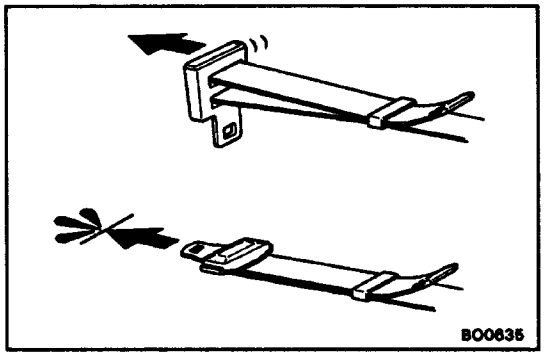

Manual Type

TESTING

(a) Adjust the belt to the proper length.

(b) Apply a firm load to the belt.

(c) Verify that the belt does not extend.

SERVICE SPECIFICATIONS

TORQUE SPECIFICATIONS

Part tightened	N·m	kgf·cm	ft·lbf
HOOD	–	–	–
Hood side hinge x Hood	23	230	17
Hood lock x Body	8.0	75	65 in.·lbf
BACK DOOR	–	–	–
Back door x Back door hinge	29	300	22
Back door hinge x Body	29	300	22
QUARTER WINDOW	–	–	–
Quarter window glass x Body	4.9	50	43 in.·lbf
SEAT	–	–	–
Front Seat	–	–	–
Seat adjuster x Body	37	375	27
Rear Seat	–	–	–
Seat x Seat hinge	7.8	80	69 in.·lbf
Seat hinge x Body	18	185	13
SEAT BELT	–	–	–
Seat belt anchor x Body	43	440	32
Seat belt guide x Body	43	440	32

SLIDING ROOF
COMPONENTS

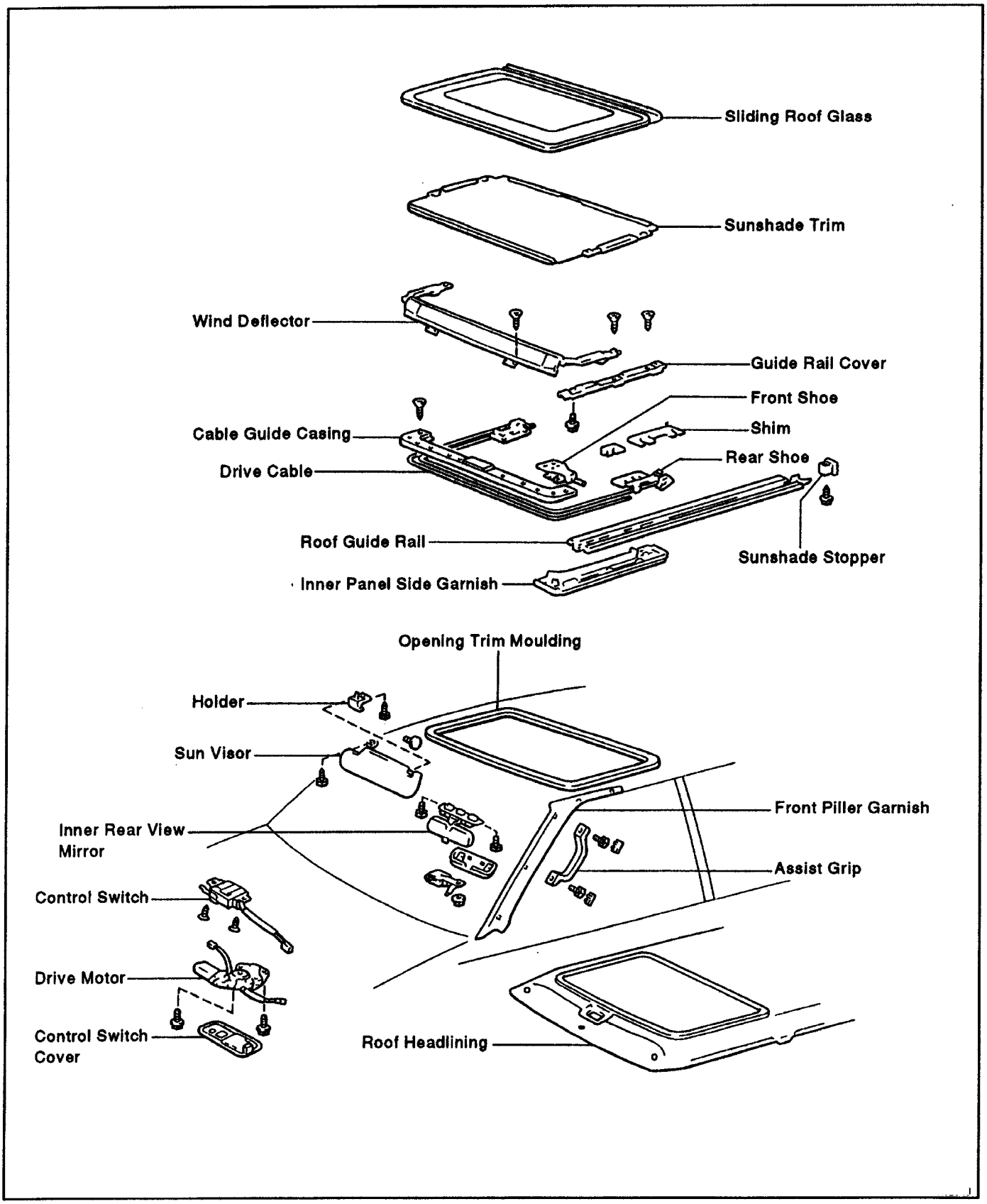

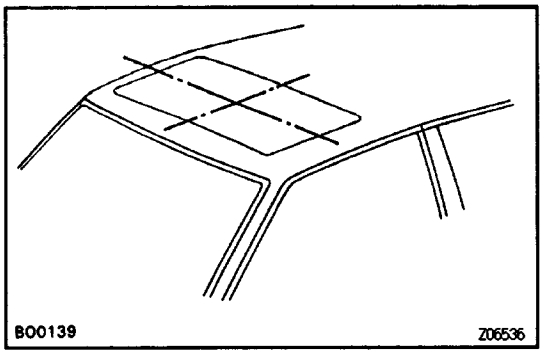

ON–VEHICLE INSPECTION

INSPECT SLIDING ROOF GLASS ALIGNMENT

(a) Start the engine and check the operation time of the sun roof.

Operation time: Approx. 8 secs.

(b) Check for abnormal noise or binding during operation.

(c) With the sun roof fully closed, check for water leakage.

If the sliding roof does not operate:

(a) Open the holder of the control switch cover.

(b) Using a special crank–shaped screwdriver, remove the large screw inside.

NOTICE: Be careful not to lose the spring washer or shim.

(c) Manually operate the sliding roof by inserting a special crank–shaped screwdriver into the hole and turning the drive shaft.

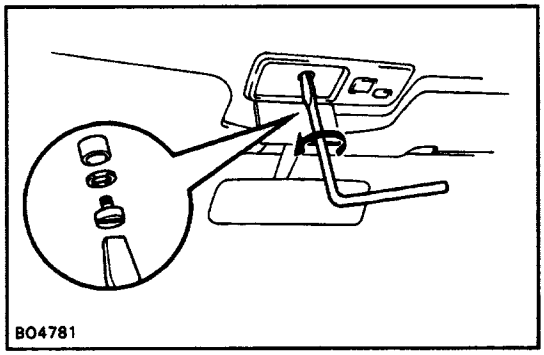

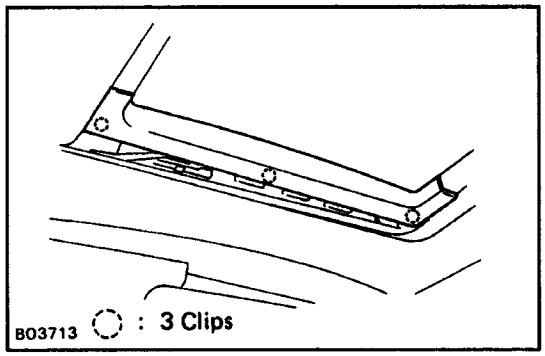

SLIDING ROOF ADJUSTMENT

1. REMOVE INNER PANEL SIDE GARNISH

Before making adjustments, remove the inner panel side garnish.

HINT: After adjustment, reinstall the inner panel side garnish.

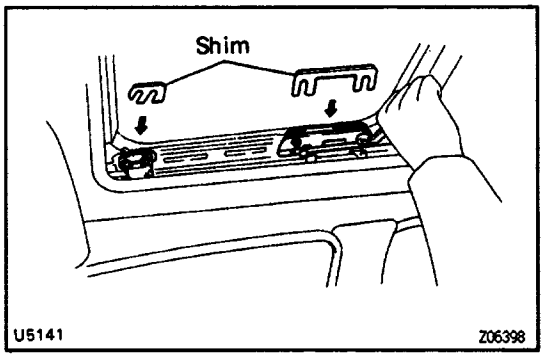

2. TO ADJUST LEVEL DIFFERENCE

Increase and decrease the number of shims.

HINT: If the front of the sliding roof is high, even without a shoe shim, check to see if the front shoes are in contact with the stoppers.

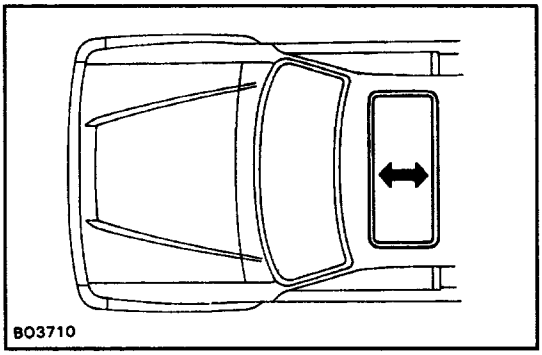

3. TO ADJUST FORWARD OR REARWARD

Loosen the sliding roof installation bolts and move the sliding roof front shoe forward and rearward.

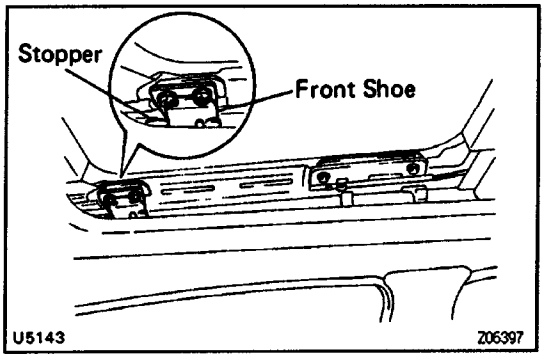

HINT: When the sliding roof is fully closed, confirm that the front shoes are in contact with the stopper.

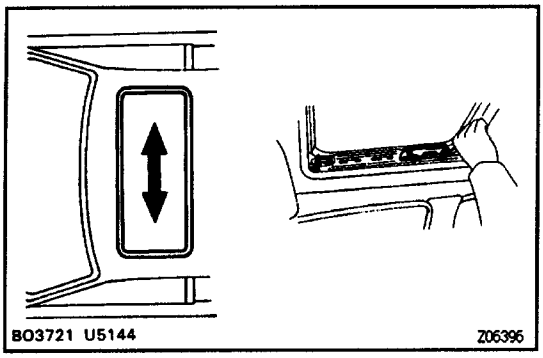

4. TO ADJUST RIGHT OR LEFT

Adjust by loosening the sliding roof rear shoe installation nuts, and move the sliding roof to the right and left.

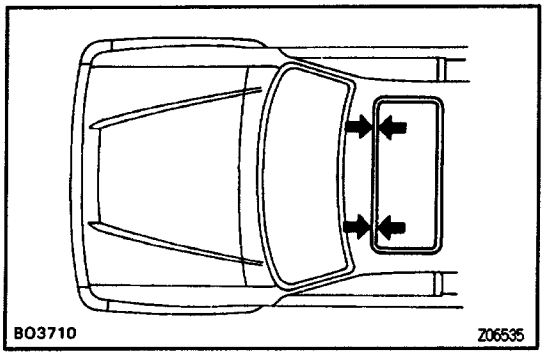

5. TO ADJUST CLEARANCE
(Difference in left and right clearance)

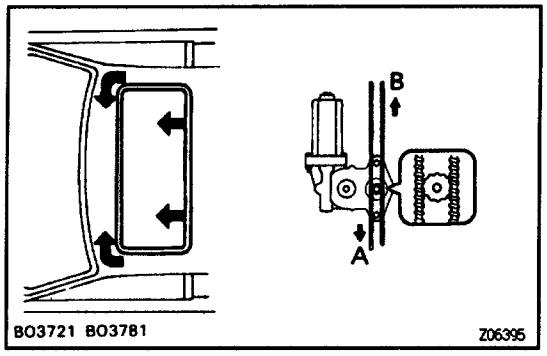

If the difference is about 2 mm (0.08 in.):

(a) Remove the drive motor and shift the cable one notch on the side with the larger clearance.
(b) Reinstall the motor.

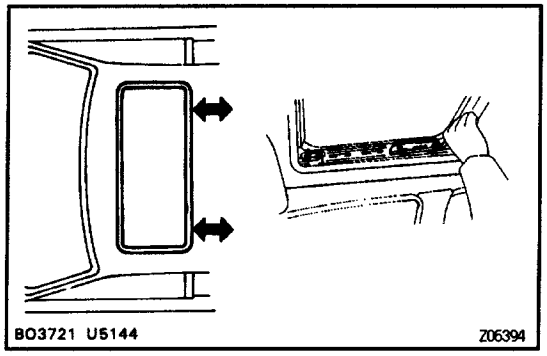

If the difference is about 1 mm (0.04 in.):

Loosen the sliding roof rear shoe installation nuts and readjust the sliding roof to the proper position.

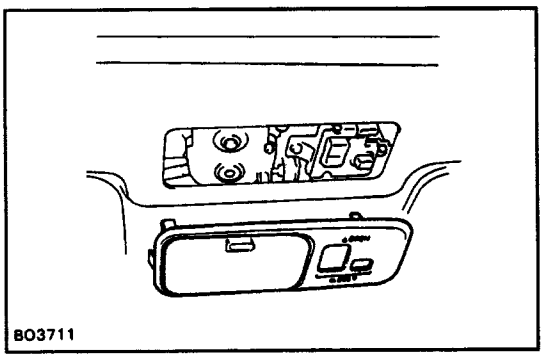
BO3711

SLIDING ROOF REMOVAL

1. DISCONNECT BATTERY CABLE FROM NEGATIVE (–) TERMINAL

2. REMOVE CONTROL SWITCH COVER

Using a screwdriver, between the retaining clips and switch cover to pry it loose.

HINT: Tape the screwdriver tip before use.

NOTICE: Do not damage the roof headlining.

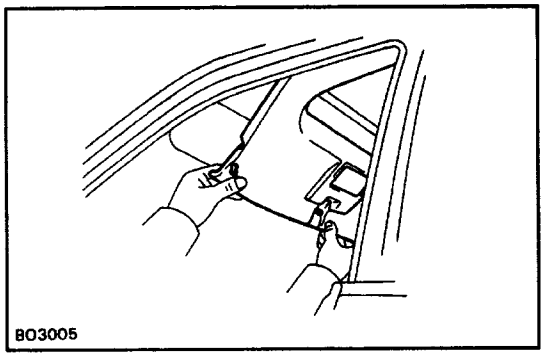
BO3005

3. REMOVE THESE PARTS:

(a) Assist grip
(b) Front pillar garnish
(c) Sun visor and holder
(d) Inner rear view mirror
(e) Opening trim moulding

4. PULL DOWN FRONT SIDE OF ROOF HEADLINING

Pull down the headlining by hand

NOTICE: Do not damage the roof headlining.

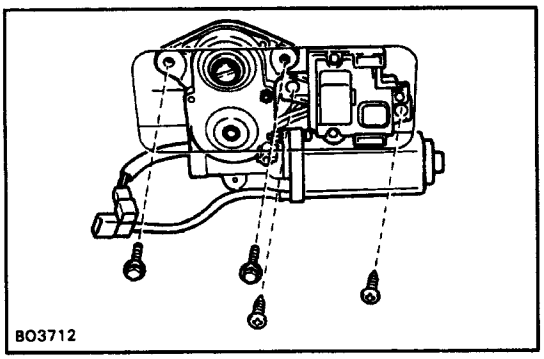
BO3712

6. REMOVE DRIVE MOTOR

(a) Remove the 2 bolts, 2 screws and the drive motor with control switch.
(b) Disconnect the connectors.

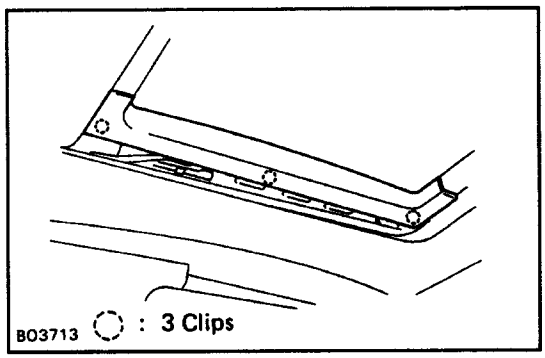

6. REMOVE INNER PANEL SIDE GARNISH

Using a screwdriver, pry loose the 3 clips and remove the inner panel side garnish.

HINT: Tape the screwdriver tip before use.

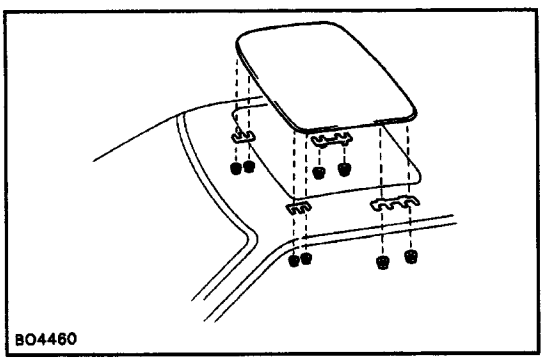
BO4460

7. REMOVE SLIDING ROOF GLASS

(a) Remove the 8 nuts and shims.

HINT: Be sure the number of shims.

(b) Pull the glass upward to remove it.

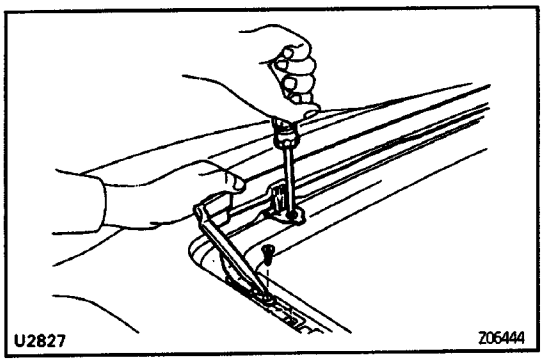

8. REMOVE WIND DEFLECTOR

Remove the 4 screws and the wind deflector.

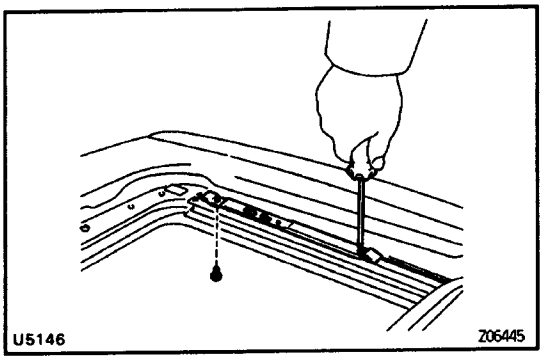

9. REMOVE GUIDE RAIL COVER

(a) Pull down the front of roof headlining to make the clearance between the roof headlining and the roof.

NOTICE: Do not damage the roof headlining.

(b) Remove the bolt, screw and the guide rail cover.

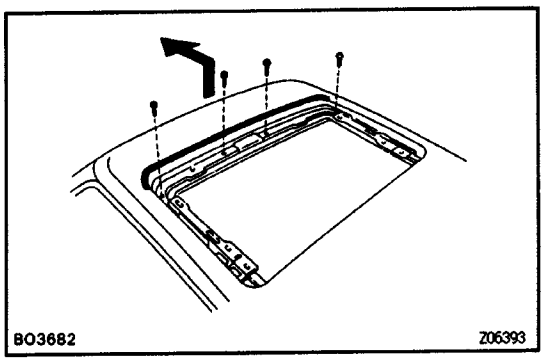

10. REMOVE CABLE GUIDE CASING

(a) Remove the 4 screws.

(b) Apply adhesive tape to protect the body.

(c) Pull the cable guide casing with the guide rail off forward to remove the 2 hooks, then remove the assembly.

SLIDING DISASSEMBLY

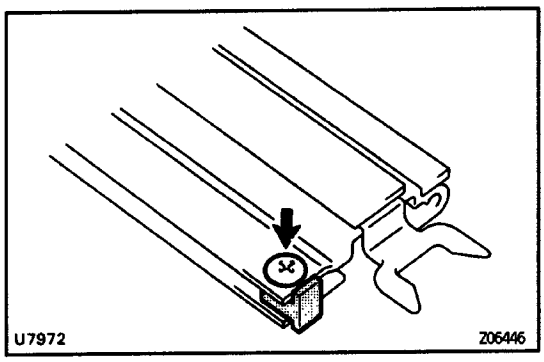

1. REMOVE SUNSHADE TRIM

(a) Remove the 2 screws and the sunshade stoppers.

(b) Pull out the sunshade trim rearward.

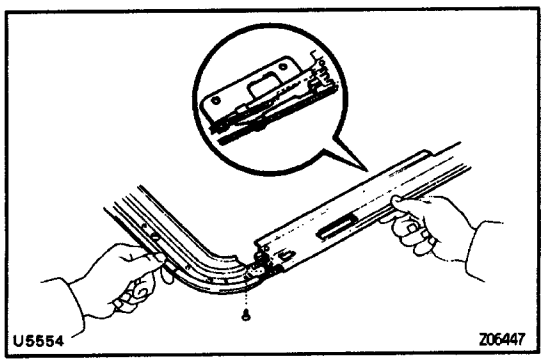

2. REMOVE CABLE GUIDE CASING FROM GUIDE RAIL

(a) Remove the 2 screws.

(b) Pull the cable guide casing forward to remove.

(c) Pull the drive cable from the cable guide casing.

SLIDING ROOF ASSEMBLY

1. APPLY MP GREASE TO DRIVE CABLE

2. PLACE DRIVE CABLE INTO CABLE GUIDE CASING

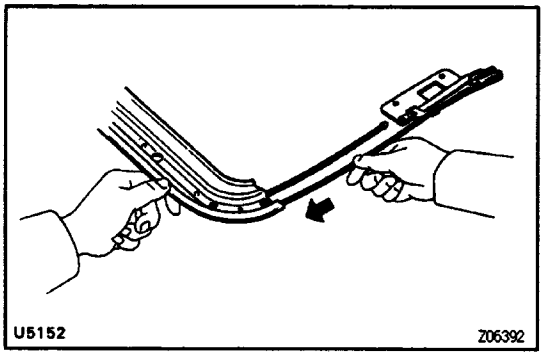

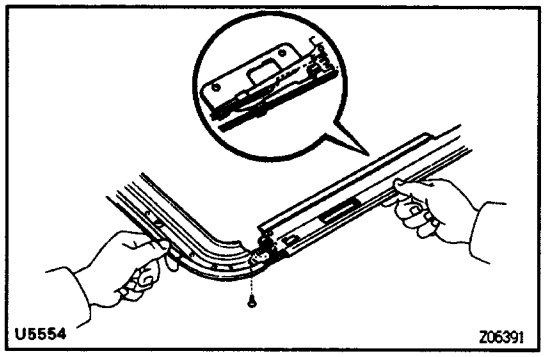

3. INSTALL CABLE GUIDE CASING TO ROOF GUIDE RAIL

(a) Insert the drive cable into the rail, and align it with the guide casing.

(b) Install the guide rail and guide casing with the 2 screws.

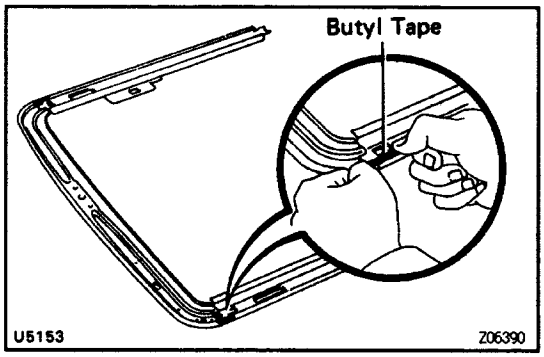

(c) Use butyl tape to cover the cut portion of the weather-strip at the connection between the guide casing and guide rail.

4. INSTALL SUNSHADE TRIM

(a) Run the sunshade trim through the guide rail.

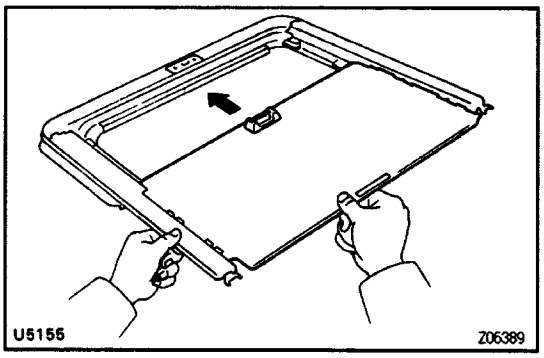

(b) Install the sunshade stoppers with the 2 screws.

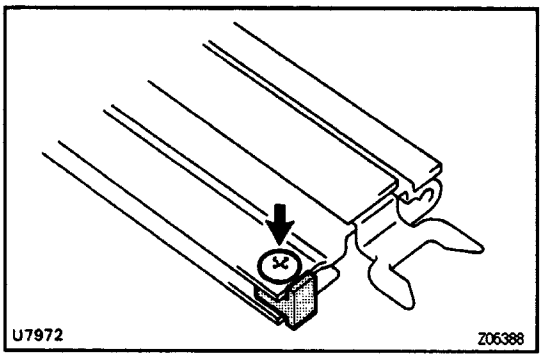

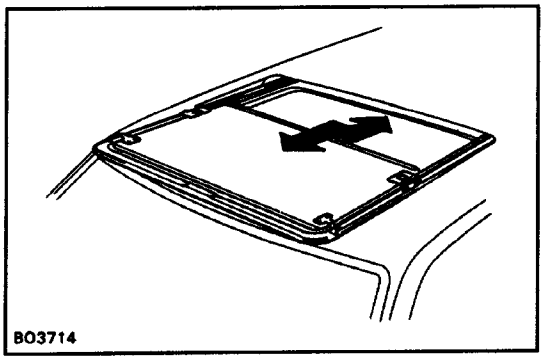

SLIDING ROOF INSTALLATION

1. INSTALL CABLE GUIDE CASING ONTO ROOF

(a) Place the cable guide casing with the guide rail onto the roof.

(b) Install the 4 screws.

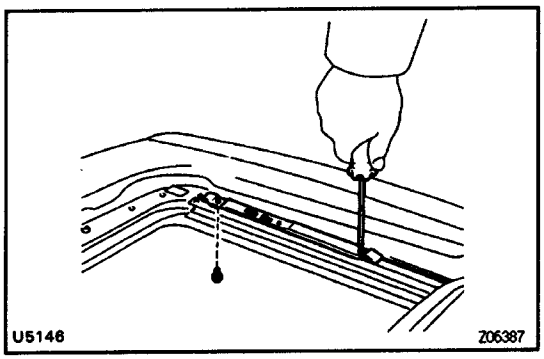

2. INSTALL GUIDE RAIL COVER

(a) Apply liquid sealer to 2 or 3 threads of the bolt end.

Sealant:

Part No. 08833–00070, THREE BOND 1324, or equivalent

(b) Install the guide rail cover with the bolt and screw.

NOTICE: Do not damage the roof headlining.

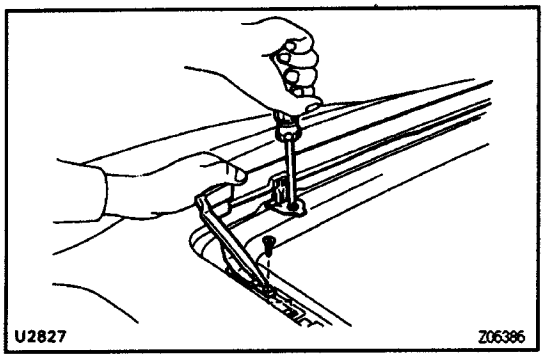

3. INSTALL WIND DEFLECTOR

Install the wind deflector with the 4 screws.

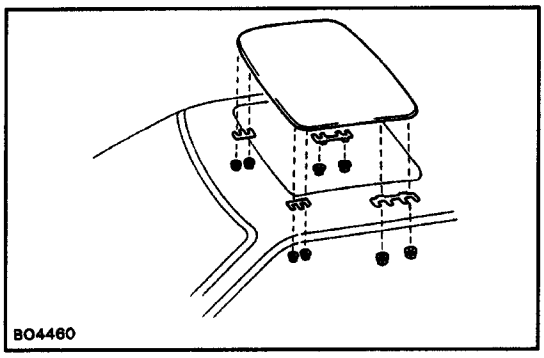

4. INSTALL SLIDING ROOF GLASS

Install the sliding roof glass and shims with the 8 nuts.

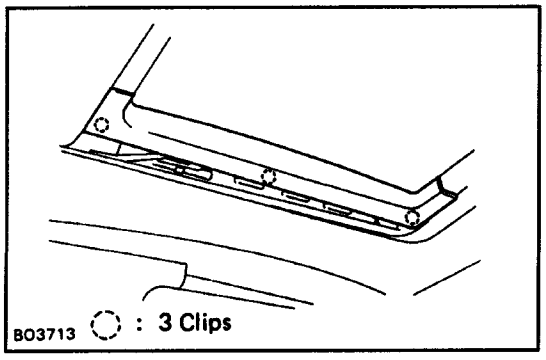

5. INSTALL INNER PANEL SIDE GARNISH

Install the inner panel side garnish with retainers to the sliding roof glass by tapping.

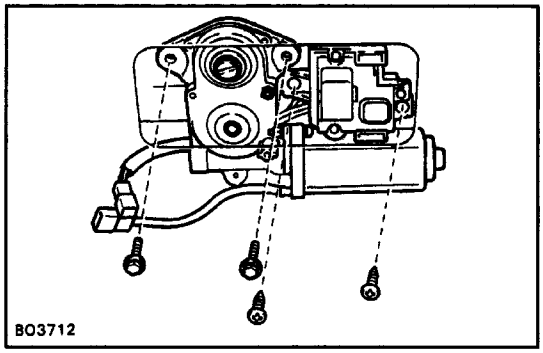

6. INSTALL DRIVE MOTOR

(a) Set the sliding roof glass in closed position by hand.
HINT: Be sure that the clearance between the left and right of the sliding roof glass and roof panel are equal.
(b) Connect the connectors.
(c) Install the control switch and the drive motor with the 2 bolts and 2 screws.

7. INSTALL THESE PARTS:

(a) Opening trim moulding
(b) Inner rear view mirror
(c) Sun visor and holder
(d) Front pillar garnish
(e) Assist grip
(f) Control switch cover

8. CONNECT BATTERY CABLE TO NEGATIVE (–) TERMINAL

9. INSPECT AND ADJUST SLIDING ROOF

WHEEL ARCH MOULDING

COMPONENTS

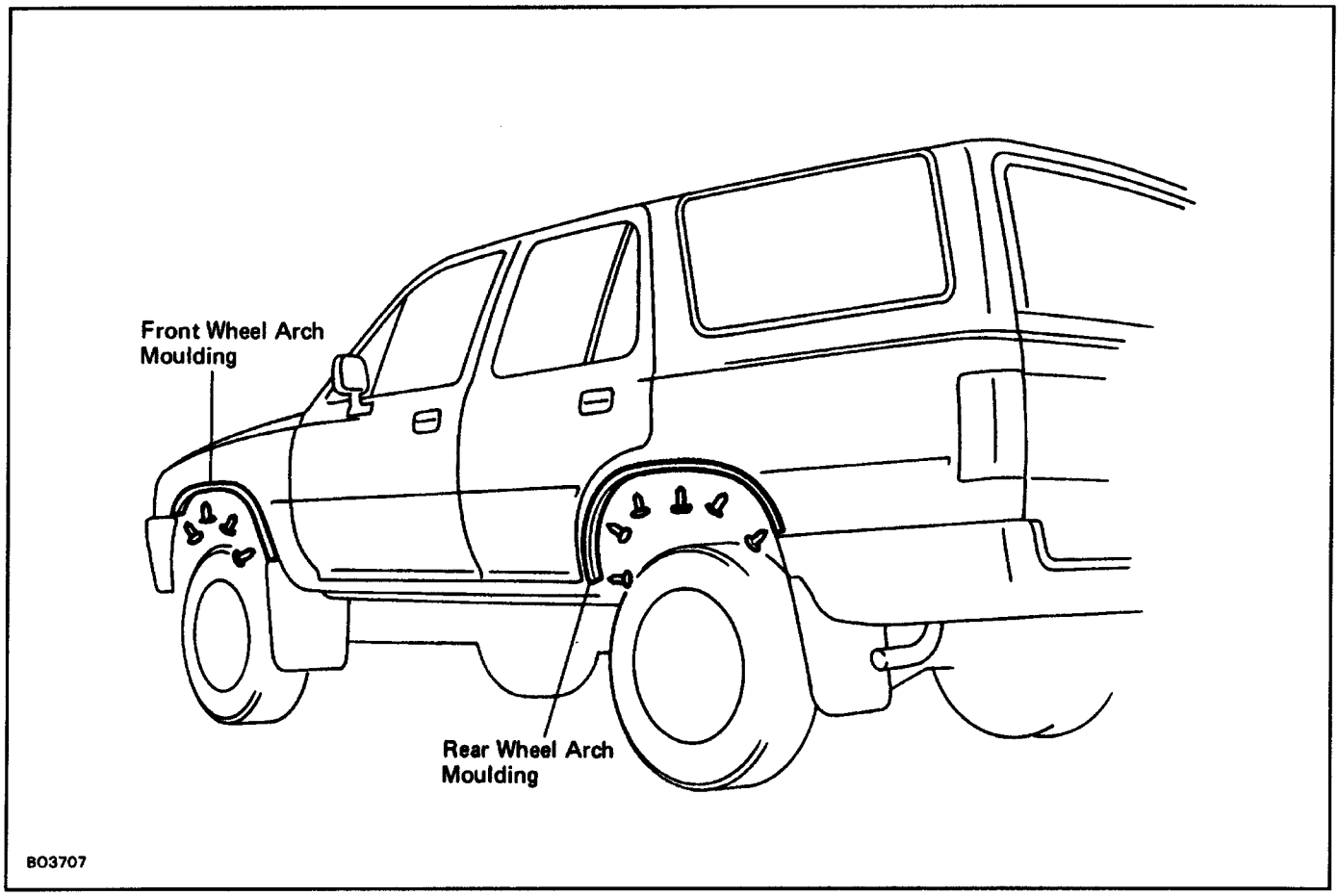

FRONT WHEEL ARCH MOULDING REPLACEMENT

1. REMOVE FRONT WHEEL ARCH MOULDING

(a) Remove the 4 screws.

(b) Using a screwdriver, pry up the wheel arch moulding and remove it.

HINT: Tape the screwdriver tip before use.

2. INSTALL FRONT WHEEL ARCH MOULDING

(a) Tap the wheel arch moulding by hand to install it.

(b) Install the 4 screws.

REAR WHEEL ARCH MOULDING REPLACEMENT

1. REMOVE REAR WHEEL ARCH MOULDING

(a) Remove the 6 screws.

(b) Using a screwdriver, pry up the wheel arch moulding and remove it.

HINT: Tape the screwdriver tip before use.

2. INSTALL REAR WHEEL ARCH MOULDING

(a) Tap the wheel arch moulding by hand to install it.

(b) Install the 6 screws.

WINDSHIELD
COMPONENTS

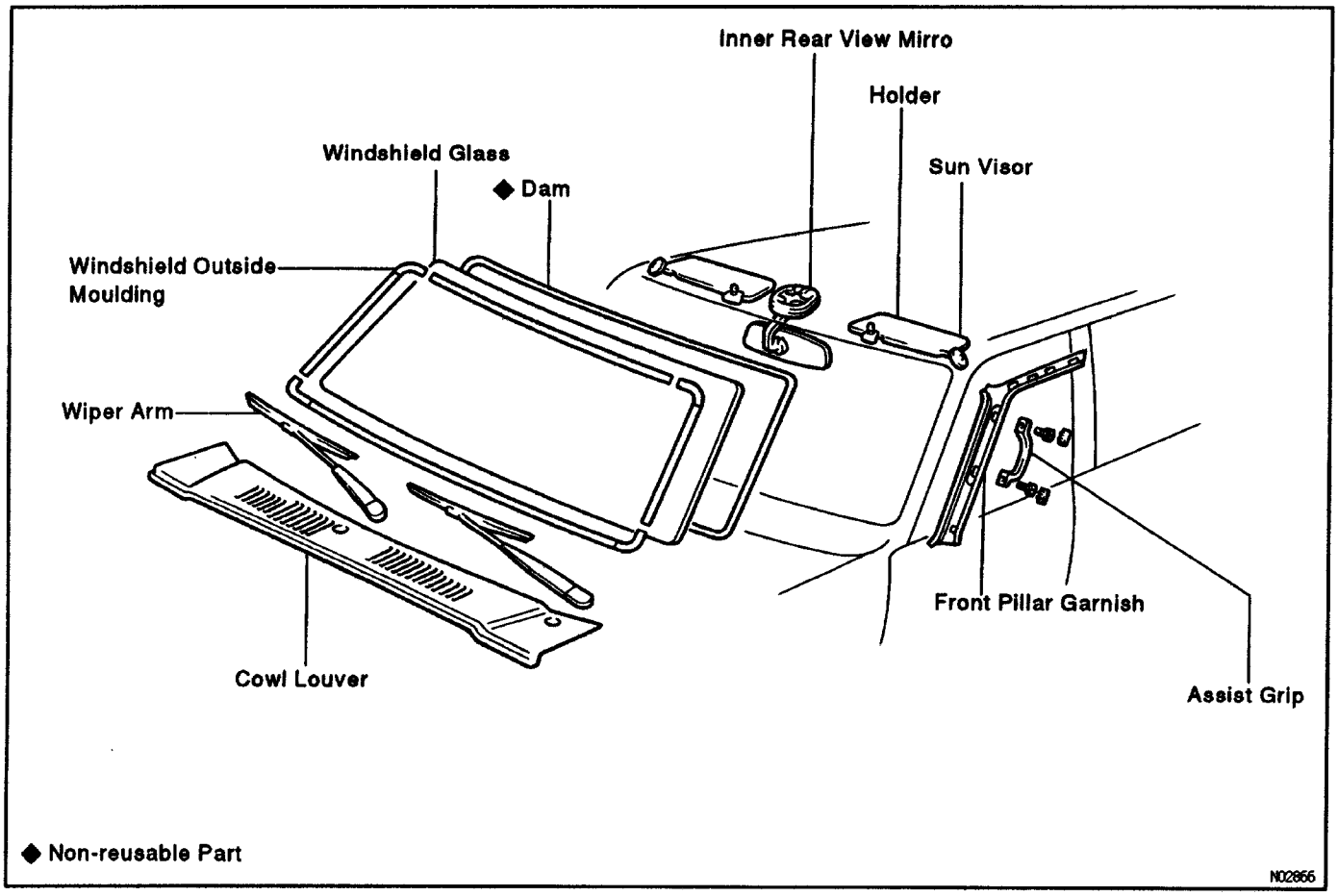

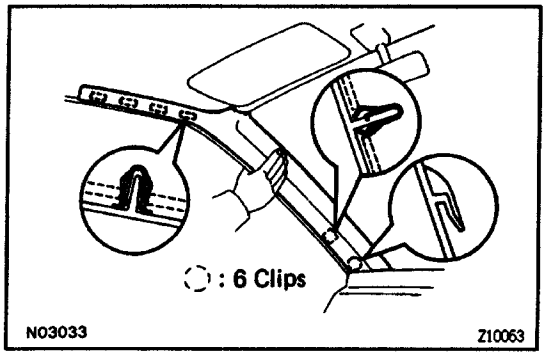

WINDSHIELD REMOVAL

1. REMOVE THESE PARTS:

(a) Inner rear view mirror
(b) Sun visors and holders
(c) Wiper arms
(d) Cowl louver
(e) Front pillar garnishes
(f) Assist grip

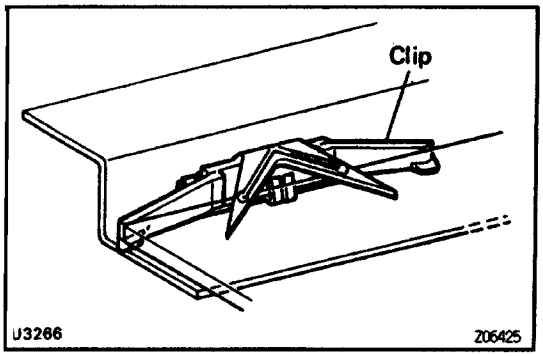

2. REMOVE WINDSHIELD MOULDING

(See page BO–30)

3. REMOVE CLIPS

Be careful not to damage the side moulding clips, when removing them from around the glass.

HINT: It is not necessary to remove the fasteners but any damaged fasteners should be replaced.

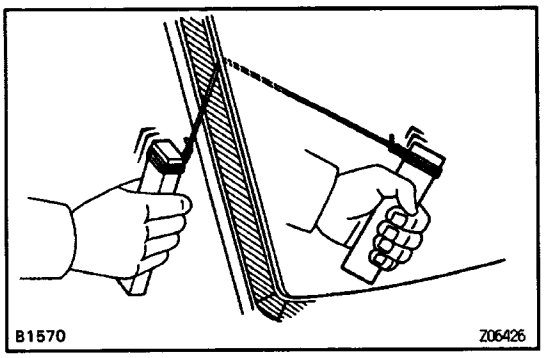

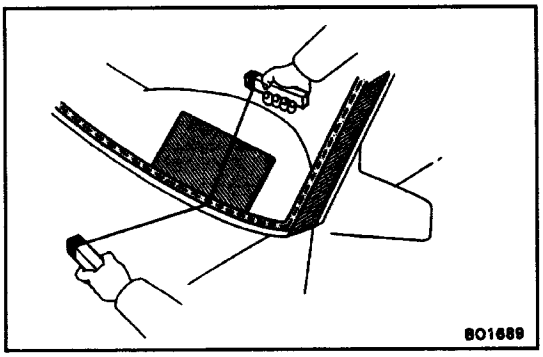

4. REMOVE WINDSHIELD GLASS

(a) Push piano wire through between the body and glass from the interior.

(b) Tie both wire ends to the wooden blocks or like objects.

HINT: Apply adhesive tape to the outer surface to keep the surface from being scratched.

NOTICE: When separating, take care not to damage the paint and interior and exterior ornaments.

To prevent scratching the safety pad in removing the windshield, place a plastic sheet between the piano wire and safety pad.

(c) Cut the adhesive by pulling the piano wire around it.

(d) Remove the glass.

NOTICE: Leave as much of the adhesive layer on the body as possible when cutting off the glass.

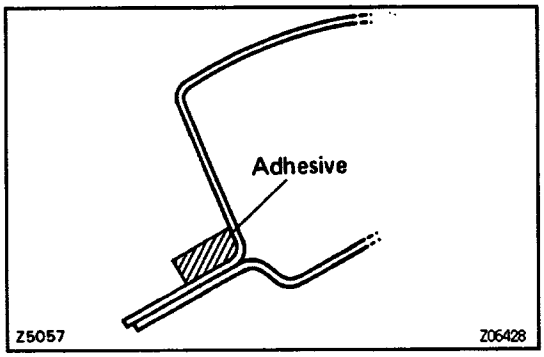

PREPARATION FOR INSTALLATION

1. CLEAN AND SHAPE CONTACT SURFACE OF BODY

(a) Remove any dam remaining on the body.

(b) Cut away any rough areas with a knife.

HINT: Leave as much of the adhesive layer on the body as possible.

(c) Clean the cutting surface of the adhesive with a piece of cloth saturated in cleaner.

HINT: Even If all the adhesive has been removed, clean the body.

2. IF NECESSARY, REPLACE FASTENERS

(Sea page BO–31**)**

3. CLEAN REMOVED GLASS BEFORE INSTALLATION

(a) Using a scraper, remove the adhesive sticking to the glass.

(b) Using a cleaner, clean the glass.

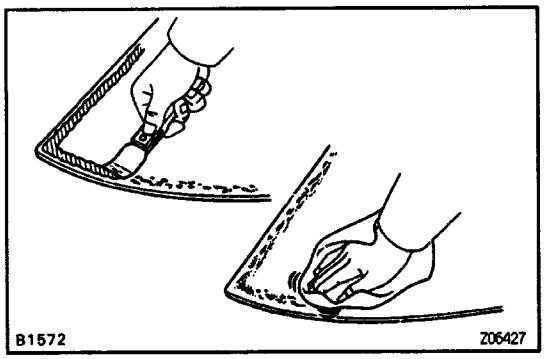

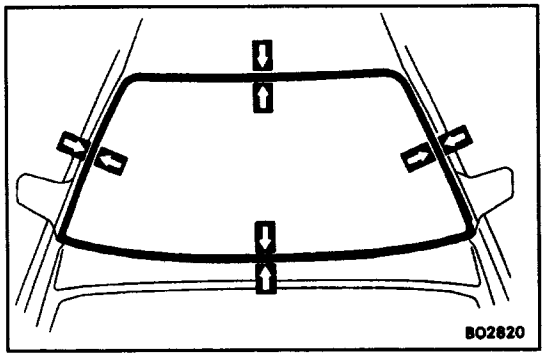

4. POSITION GLASS

(a) Place the glass in correct position.

(b) Check that all contacting parts of the glass rim are perfectly even, and do not make contact with the fasteners.

(c) Mark reference marks between the glass and body.

(d) Remove the glass.

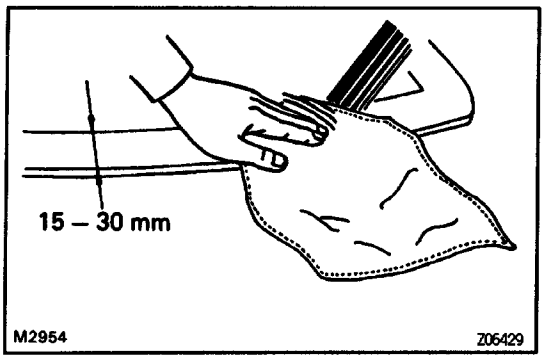

WINDSHIELD INSTALLATION

1. CLEAN CONTACT SURFACE OF GLASS

Using cleaner, clean the contact surface 15 – 30 mm (0.59 – 1.18 in.) wide around the entire glass rim.

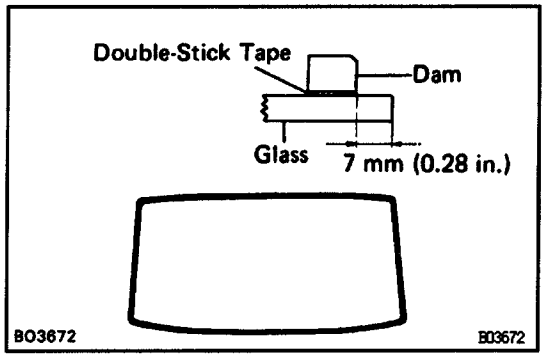

2. INSTALL DAM

(a) Apply double–stick tape at a point, as shown.

(b) Place the dam on the double–stick tape.

NOTICE: Do not touch the glass face after cleaning it.

3. COAT CONTACT SURFACE OF BODY WITH PRIMER "M"

Using a brush, coat the contact surface on the body with Primer M.

NOTICE:

- **Let the primer coating dry for 10 minutes or more.**
- **Make sure that the installation of the glass is finished within 2 hours.**
- **Take care not to leave any part of the contact surface uncoated or excessively coated, as Primer**
- **M affects adherent of the adhesive to the glass or body.**
- **Do not keep any of the opened Primer M for later use.**

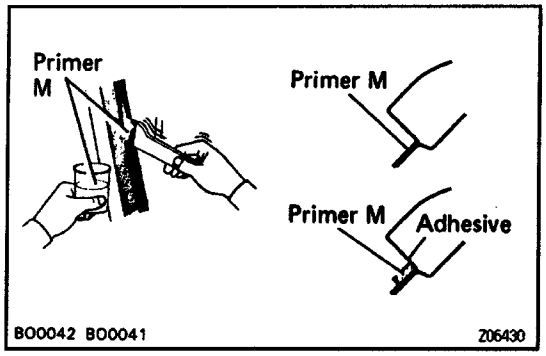

4. COAT CONTACT SURFACE OF GLASS WITH PRIMER "G"

(a) Using a brush or sponge, coat the edge of the glass and the contact surface with Prime G.

(b) Before the primer dries, wipe it off with a clean cloth to avoid too thick coating.

- **Be sure that installation of the glass Is finished within 70 minutes.**
- **Take care not to leave any part of the contact surface uncoated or excessively coated, as Primer G affects adherent of the adhesive to the glass or body.**
- **Do not keep any of the opened Primer G for later use.**

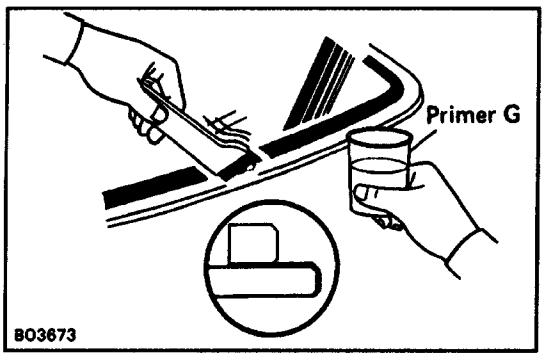

5. MIX ADHESIVE COATING

NOTICE:

- **Be sure that Installation of the glass Is finished within usable time.**
- **The mixture should be made in 5 minutes or less.**

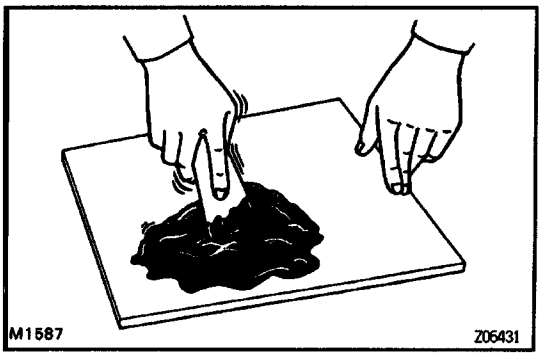

(a) Thoroughly clean the glass plate and putty spatula with cleaner.
(b) Thoroughly mix 500 g (17.64 oz.) of the main agent and 75 g (2.65 oz.) of the hardening agent on a glass plate or like object with a putty spatula.

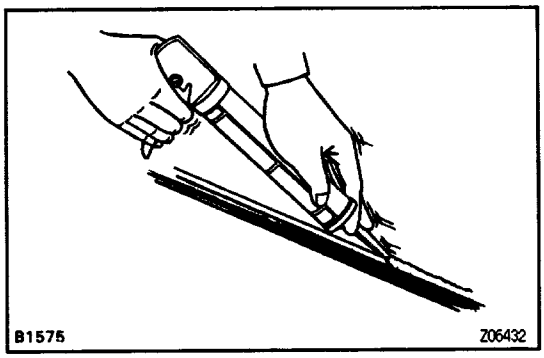

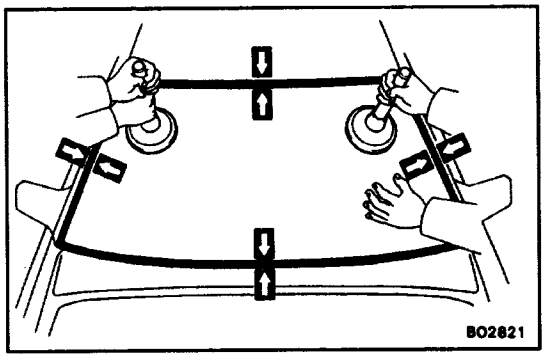

6. APPLY ADHESIVE

(a) Cut oft the tip of the cartridge nozzle to make a hole 5 mm (0.20 in.) in diameter. Fill the cartridge with adhesive.
(b) Load the cartridge into the sealer gun.
(c) Coat the glass with adhesive on all contact surfaces along the ridge.

Adhesive height:

If adhesive remains on the body
3.5 – 5.0 mm (0.138 – 0.197 in.)
If no adhesive remains on the body
8 – 10 mm (0.31 – 0.39 in.)

7. INSTALL GLASS

(a) Position the glass so that the reference marks are lined up, and press in gently along the rim.
(b) Using a spatula, apply adhesive on the glass rim.
(c) Use a spatula to remove any excess or protruding adhesive.
(d) Fasten glass securely until the adhesive sets.

8. INSPECT FOR LEAKS AND REPAIR

(a) Perform a leak test after the hardening time has elapsed.
(b) Seal any leaks with sealant.

Part No. 08833–00030 or equivalent

9. INSTALL CLIPS AND WINDSHIELD MOULDING

10. INSTALL THESE PARTS:

(a) Inner rear view mirror
(b) Sun visors and holders
(c) Front pillar garnishes
(d) Cowl louver
(e) Wiper arms
(f) Assist grip

WINDSHIELD MOULDING

COMPONENTS

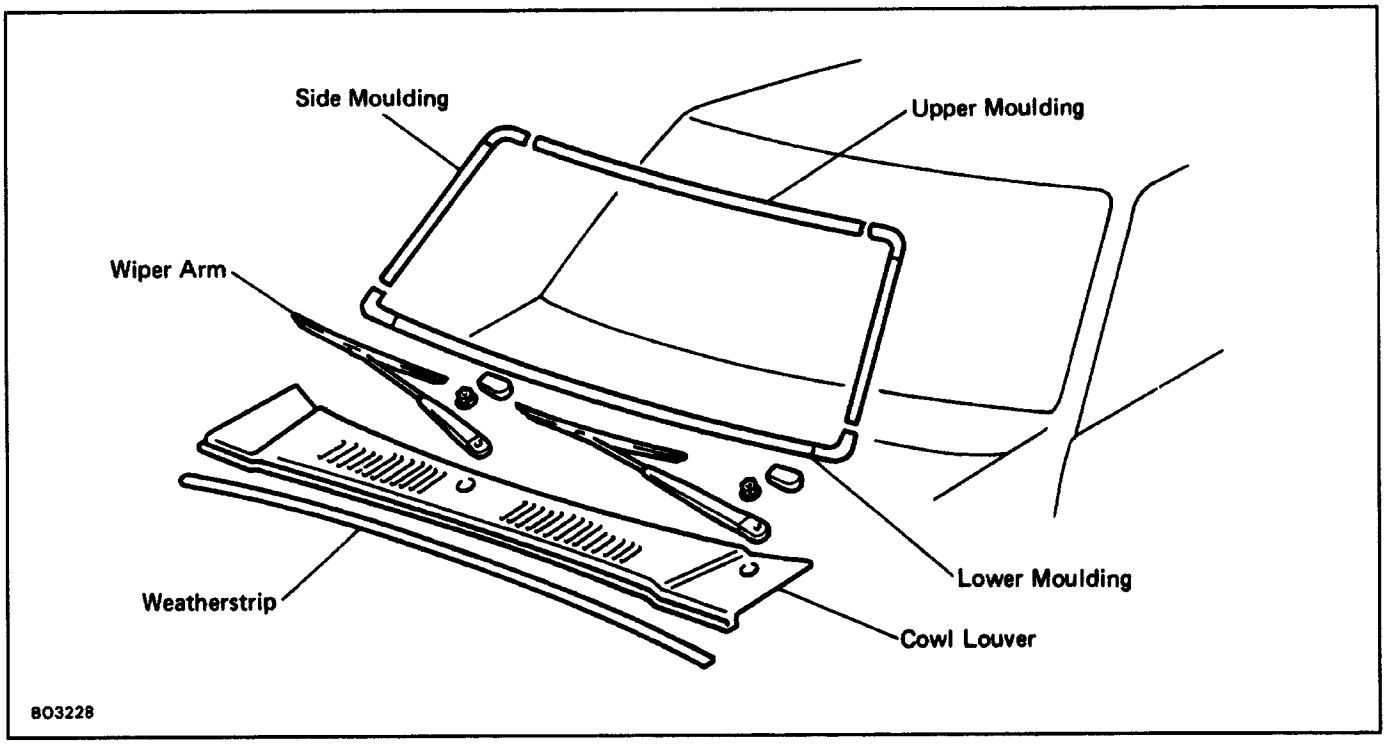

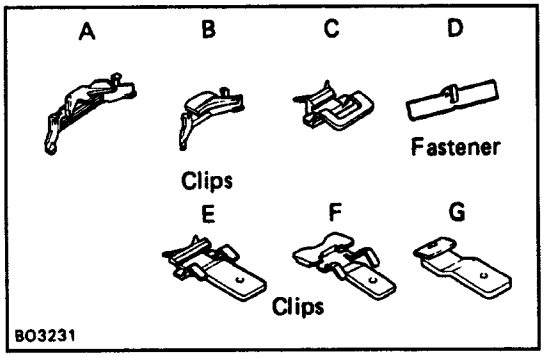

WINDSHIELD MOULDING REMOVAL

LOCATION OF CLIPS AND FASTENER

- For vehicles which have black moulding, refer to diagram Type I .
- For vehicles which have metallic moulding, refer to diagram Type ll.
- However, if all clips and fasteners are replaced, either diagram Type I or TypeII may be referred to.

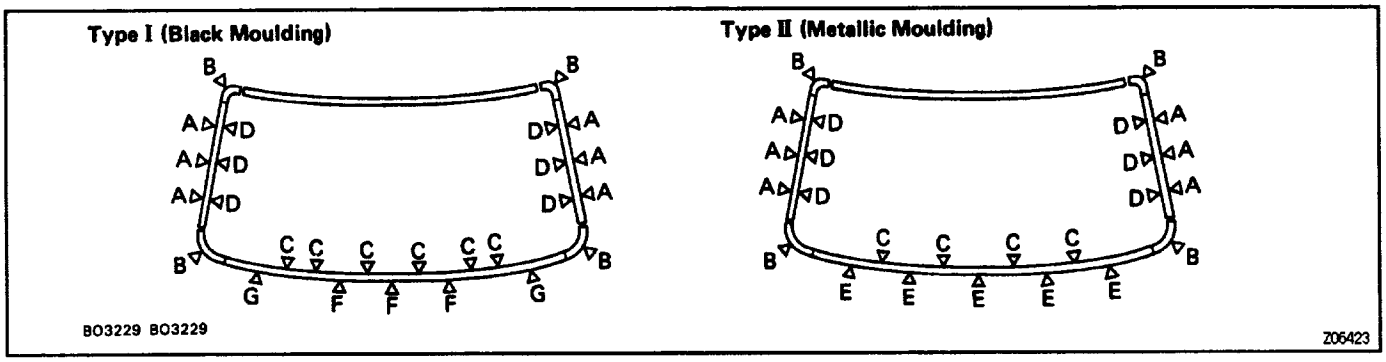

1. REMOVE WIPER ARMS

2. REMOVE COWL LOUVER AND WEATHERSTRIP

3. REMOVE LOWER MOULDING WITH LOWER JOINT COVERS

(a) Remove the 5 screws from the clips.

(b) Pry up a scraper to loosen the clips from the body.

HINT: Tape the scraper tip before use.

(c) Remove the moulding with lower joint covers and clips.

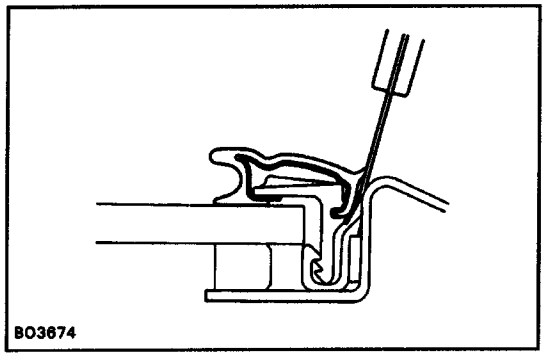

4. REMOVE SIDE MOULDING WITH UPPER JOINT COVERS

(a) Insert the tip of a scraper between the body and moulding.

HINT: Tape the scraper tip before use.

(b) Pry up the scraper to loosen the moulding from the claws of the clips and fasteners.

(c) Remove the moulding with upper joint covers.

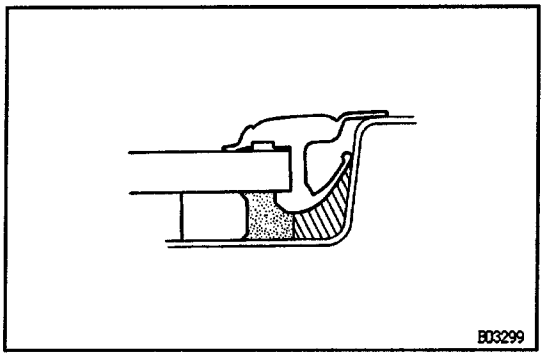

5. REMOVE UPPER MOULDING

(a) Using a knife, cut off the upper moulding, as shown.

(b) Cut off the old adhesive around the upper moulding installation area.

NOTICE: Do not damage the body and glass.

FASTENER REPLACEMENT

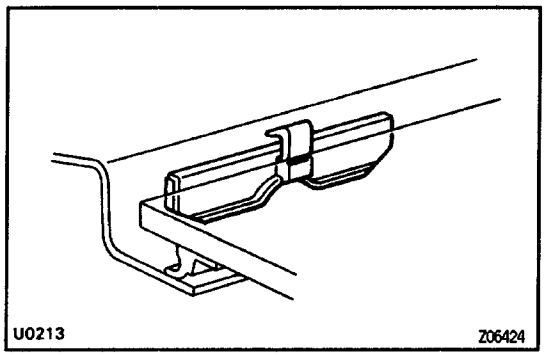

REPLACE FASTENER

(a) Remove the damaged fastener.

(b) Cut oft the old adhesive around the fastener installation area.

NOTICE: Be carefully not to damage the body.

(c) Clean the installation area.

(d) Install new fastener onto the body.

WINDSHIELD MOULDING INSTALLATION

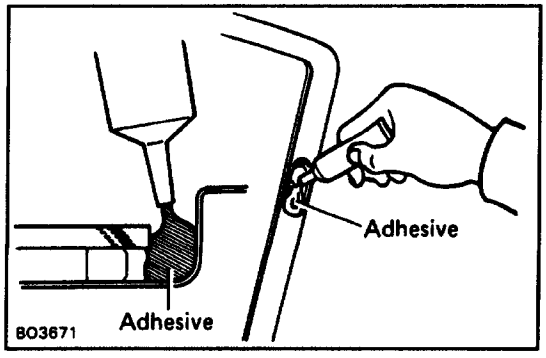

1. INSTALL CLIP INTO MOULDING

Install the clip to the appropriate place on the moulding.

2. APPLY ADHESIVE AT CLIP INSTALLATION AREA

(a) Cut out the old adhesive around the clip installation area.

NOTICE: Do not damage the body and fastener.

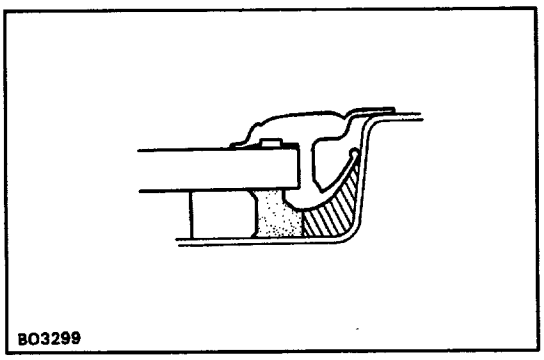

(b) Apply adhesive at the clip installation area so water does not accumulate there.

3. APPLY ADHESIVE AT UPPER MOULDING INSTAL–LATION AREA

4. INSTALL NEW UPPER MOULDING

Place the moulding onto the body and tap it by hand.

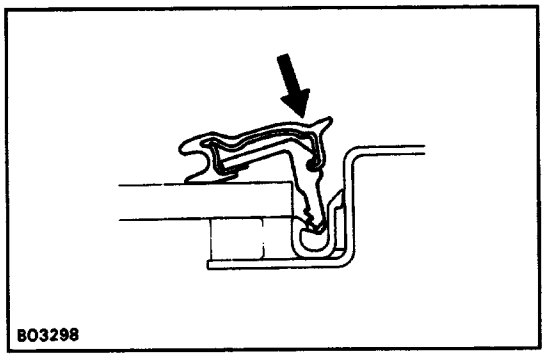

5. INSTALL SIDE MOULDING WITH UPPER JOINT COVERS

(a) Place the moulding with upper joint covers onto the body.

(b) Tap the moulding by hand to install it.

(c) Pry up the clips on the body side, and install them to the moulding.

6. INSTALL LOWER MOULDING WITH LOWER JOINT COVERS

(a) Place the moulding with lower joint covers onto the body.

(b) Align the clips of the moulding with the body holes, and push the moulding on the body.

7. INSTALL COWL LOUVER AND WEATHERSTRIP

8. INSTALL WIPER ARMS

ABS ACTUATOR

ABS ACTUATOR REMOVAL

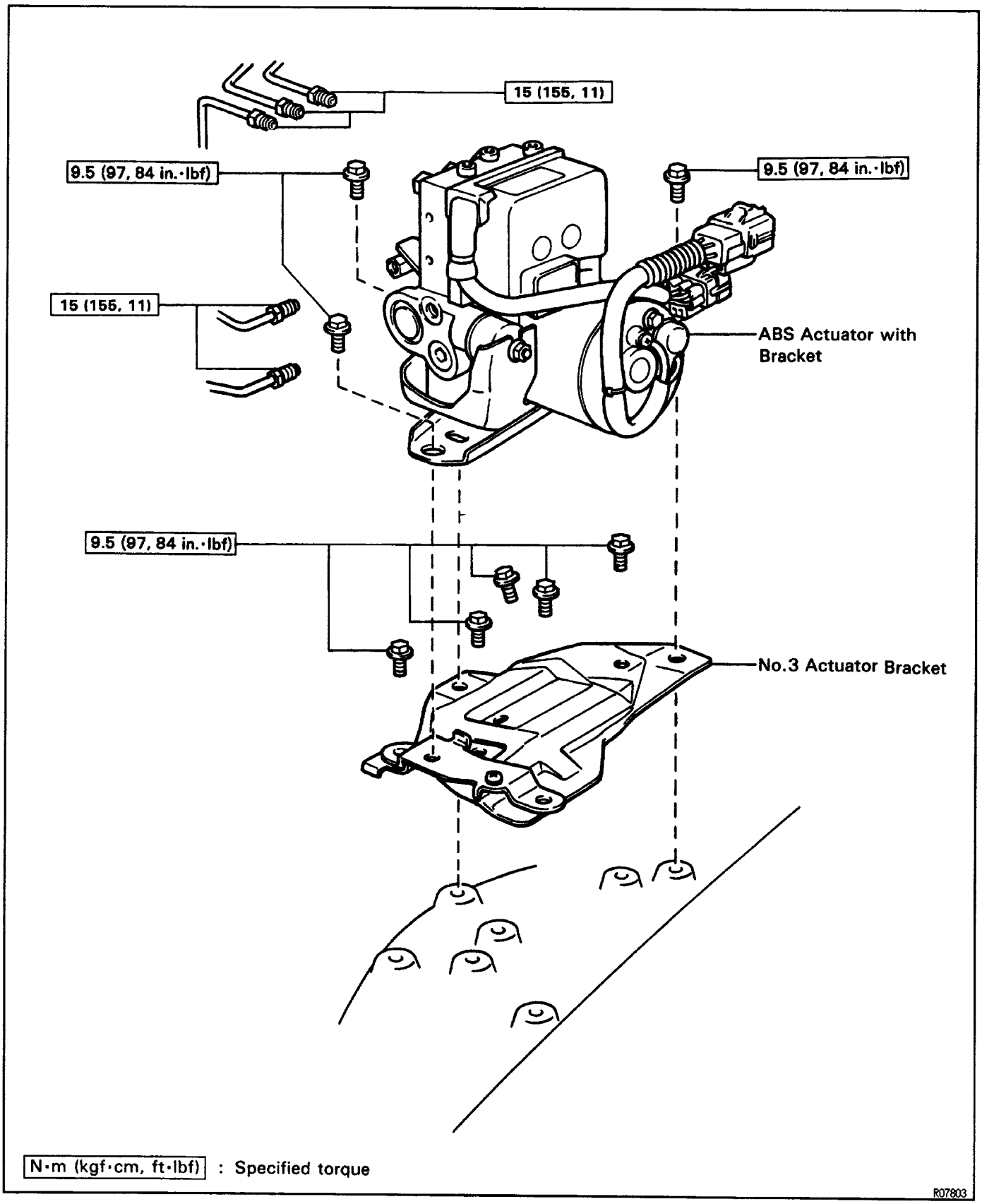

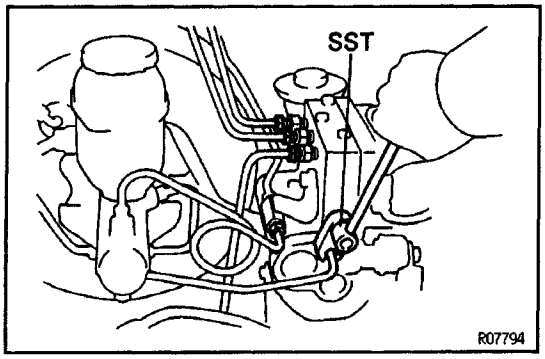

1. DISCONNECT 2 CONNECTOR FROM ACTUATOR

2. DISCONNECT BRAKE LINES

Using SST, disconnect the brake lines from the ABS actuator.

SST 09023–00100

3. REMOVE ABS ACTUATOR ASSEMBLY

Remove the 3 bolts and ABS actuator assembly from No.3 actuator bracket.

4. REMOVE NO.3 ACTUATOR BRACKET

Remove the 5 bolts and No.3 actuator bracket.

ABS ACTUATOR INSTALLATION

1. INSTALL NO.3 ACTUATOR BRACKET

Install the 5 bolts and No.3 actuator bracket.

Torque: 9.5 N–m (97 kgf–cm, 84 in.–lbf)

2. INSTALL ABS ACTUATOR ASSEMBLY

Install the 3 bolts and ABS actuator assembly from No.3 actuator bracket.

Torque: 9.5 N–m (97 kgf–cm, 84 in.–lbf)

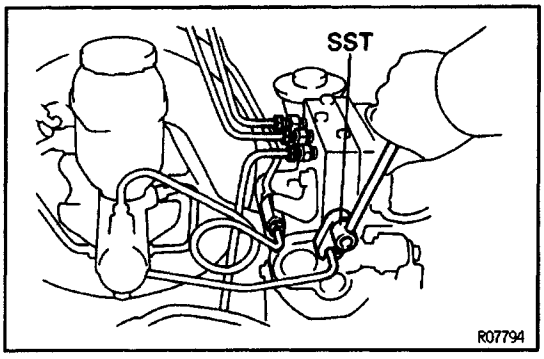

3. CONNECT BRAKE LINES

Using SST, connect the brake lines to the ABS actuator.

SST 09023 – 00100

Torque: 15 N–m (155 kgf–cm, 11 ft–lbf)

4. CONNECT 2 CONNECTOR FROM ACTUATOR

5. BLEED BRAKE SYSTEM (See page BR–8)

ABS ACTUATOR DISASSEMBLY AND ASSEMBLY

Disassemble and assemble the parts, as shown.

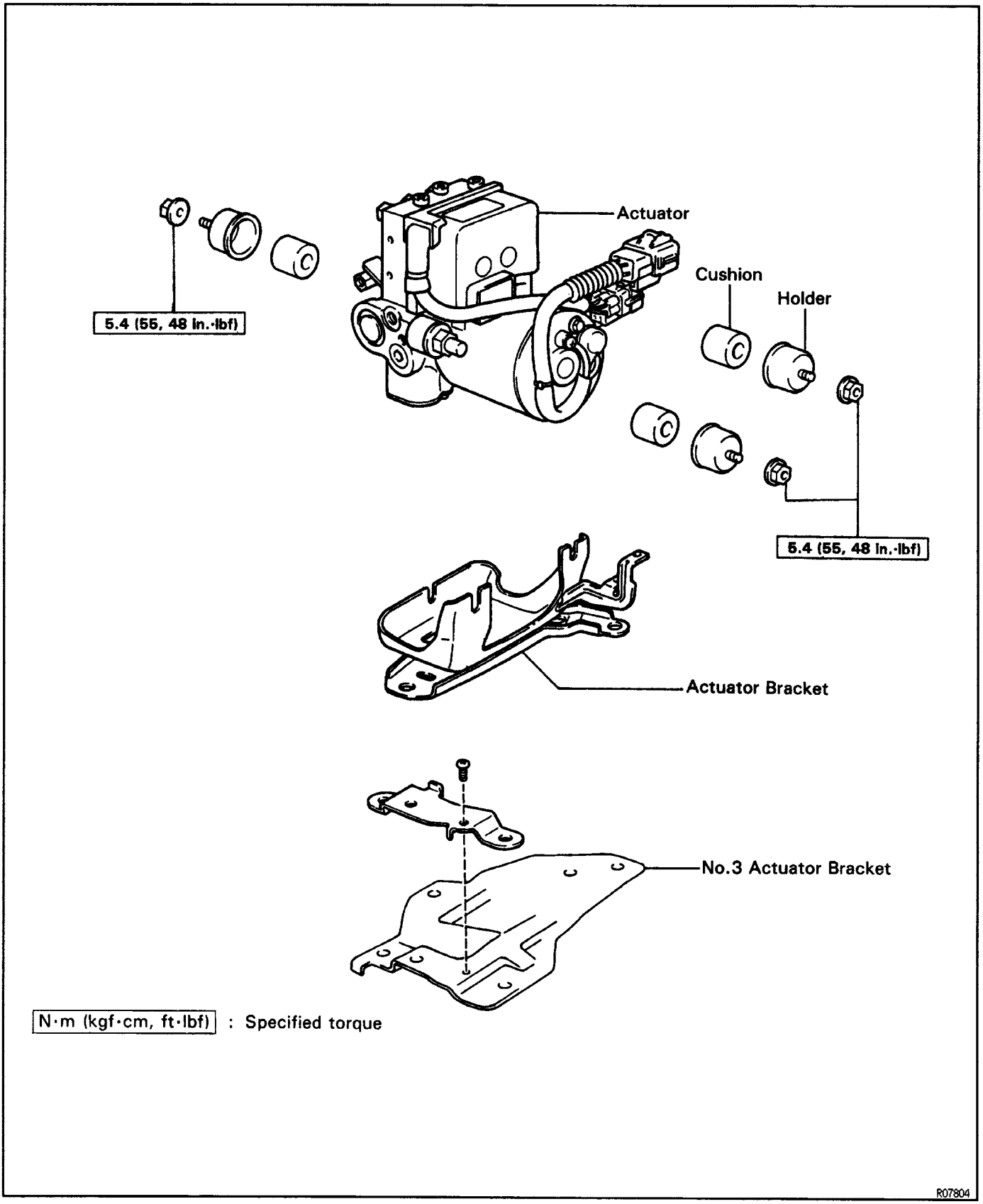

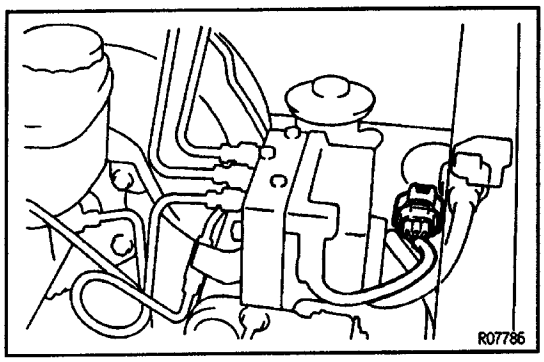

ABS ACTUATOR INSPECTION

1. INSPECT BATTERY POSITIVE VOLTAGE

Battery positive voltage:

10–14 V

2. DISCONNECT CONNECTORS

(a) Disconnect the connector from the actuator.

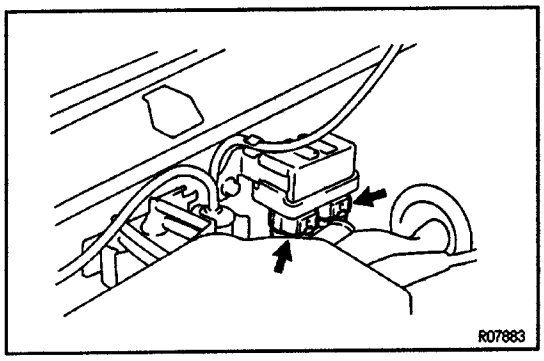

(b) Disconnect the 2 connectors from the control relay.

3. CONNECT ACTUATOR CHECKER (SST) TO ACTUA–TOR

(a) Connect the actuator checker (SST) to the actuator, control relay and body side wire harness through the sub–wire harness C (SST) and E (SST), as shown.
SST 09990–00150, 09990–00200, 09990–00210

(b) Connect the red cable of the checker to the battery positive (+) terminal and black cable to the negative (–) terminal. Connect the black cable of the sub–wire harness to the battery negative (–) terminal or body ground.

(c) Place "SHEET L" (SST) on the actuator checker.
SST 09990–00370

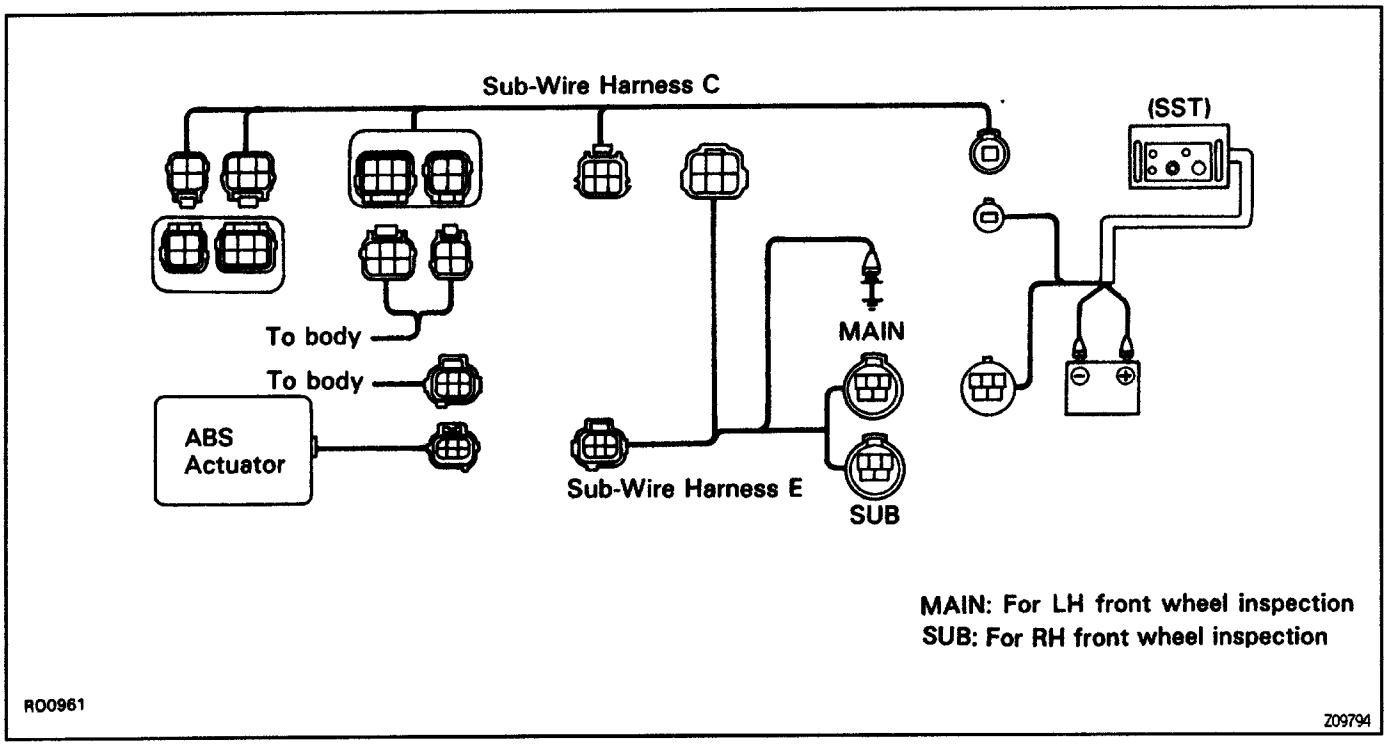

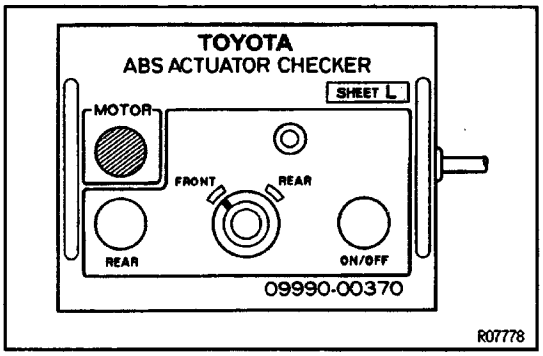

4. INSPECT BRAKE ACTUATOR OPERATION

(a) Start the engine, and run it at idle.

(b) Turn the selector switch of the actuator checker to "FRONT" position.

(c) Push and hold in the MOTOR SWITCH for a few seconds.

(d) Depress the brake pedal and hold it until the step (g) is completed.

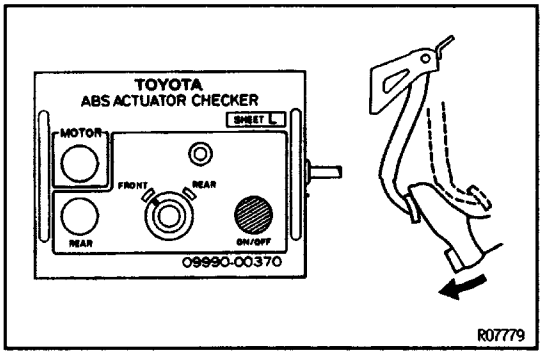

(e) Push the POWER SWITCH, and check that the brake pedal does not go down.

NOTICE: Do not keep the POWER SWITCH pushed down for more than 10 seconds.

(f) Release the switch, and check that the pedal goes down.

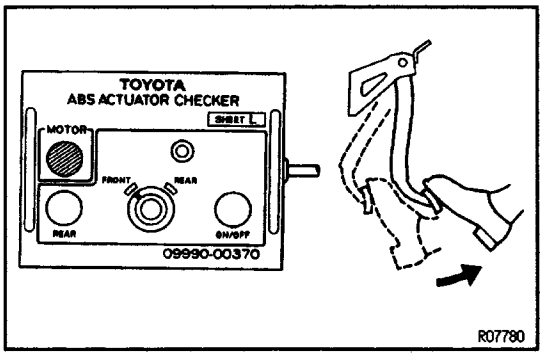

(g) Push and hold in the MOTOR switch for a few seconds, and check that the pedal returns.

(h) Release the brake pedal.

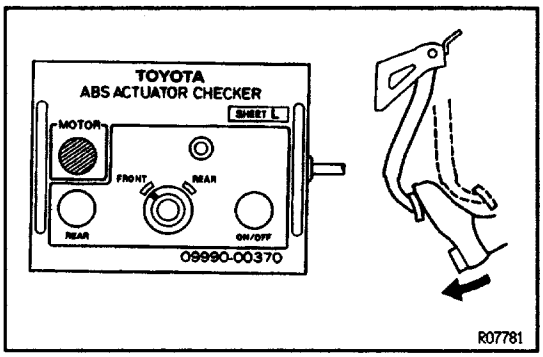

(i) Push and hold in the MOTOR switch for a few seconds.

(j) Depress the brake pedal and hold it for about 15 seconds. As you hold the pedal down, push the MOTOR SWITCH for a few seconds. Check that the brake pedal does not pulsate.

(k) Release the brake pedal.

5. INSPECT FOR OTHER WHEELS

(a) Change the connection of the actuator checker(SST) to the sub–wire harness E(SST) – from the subwire harness MAIN connector to the SUB connector, or vice versa.

(b) Repeating

(c) to (j) of the step 4, check the actuator operation same way.

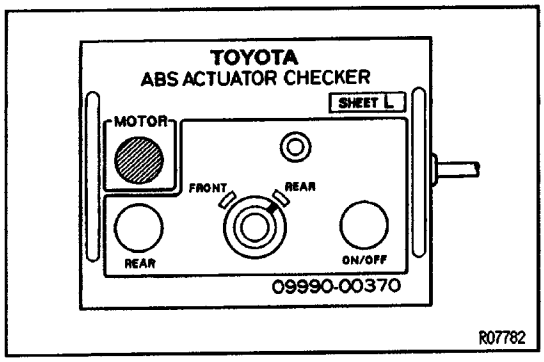

6. INSPECT FOR REAR WHEEL

(a) Turn the selector switch to the "REAR" position.

(b) Push and hold in the MOTOR SWITCH for a few seconds.

(c) Depress the brake pedal and hold it until the step (g) is completed.

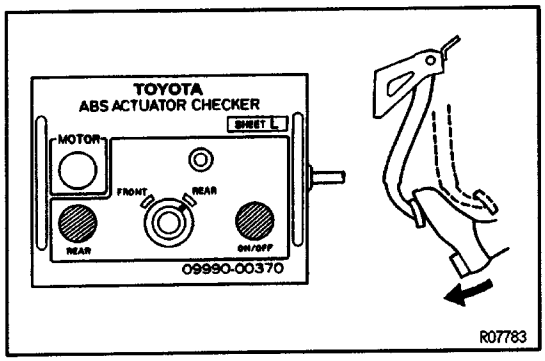

(d) Push the REAR switch while pressing the POWER switch, and check that the brake pedal cannot be depressed.

NOTICE: Do not keep the POWER SWITCH pushed down for more than 10 seconds.

(e) Release the REAR switch then the POWER switch, and check that the brake pedal can be depressed.

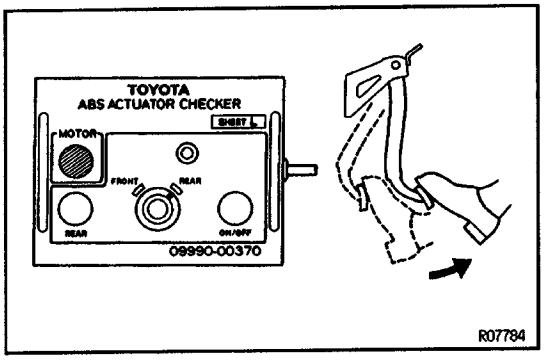

(f) Push and hold in the MOTOR switch for a few seconds, and check that the pedal returns.

(g) Release the brake pedal.

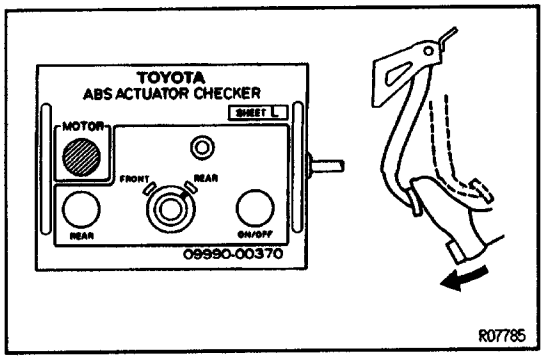

(h) Push and hold in the MOTOR switch for a few seconds.

(i) Depress the brake pedal and hold it for about 15 seconds. As you hold the pedal down, push the MOTOR SWITCH for a few seconds. Check that the brake pedal does not pulsate.

(j) Release the brake pedal.

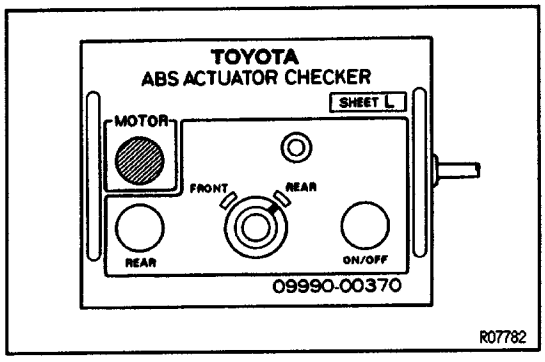

7. PUSH MOTOR SWITCH

(a) Push and hold in the MOTOR switch for a few seconds.

(b) Stop the engine.

8. DISCONNECT ACTUATOR CHECKER (SST) FROM ACTUATOR

Disconnect the actuator checker (SST) and sub–wire harness (SST) from the actuator, control relay and body side wire harness.

SST 09990 – 00150, 09990 – 00200, 09990 – 00210, 09990–00370

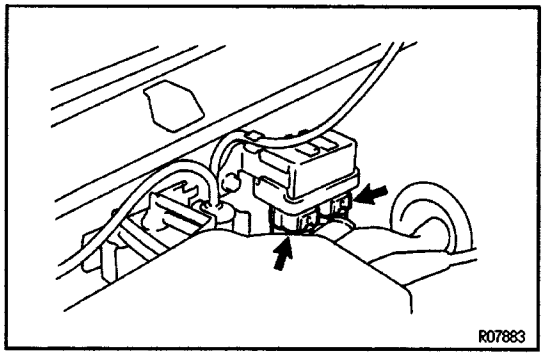

9. CONNECT CONNECTORS

(a) Connect the 2 connectors to the control relay.

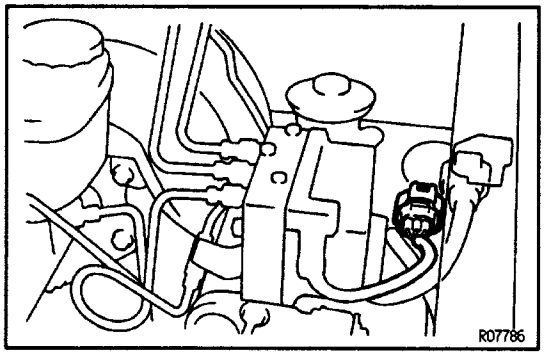

(b) Connect the connector to the actuator.

10. CLEAR DIAGNOSTIC TROUBLE CODES

(See page BR–80**)**

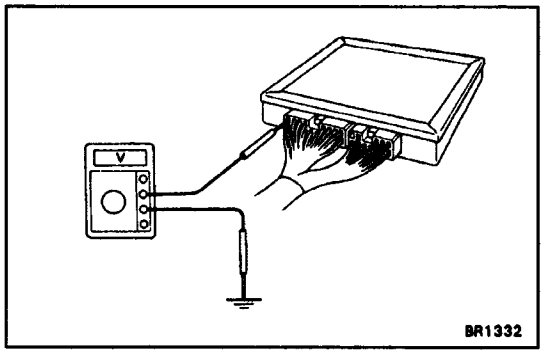

ANTI–LOCK BRAKE SYSTEM CIRCUIT

SYSTEM CIRCUIT INSPECTION

1. INSPECT SYSTEM CIRCUIT WITH CONNECTOR CONNECTED

(a) Remove the ABS ECU.

(b) Using a voltmeter with high impedance (10 kΩ/V minimum), measure the voltage at each terminal and body ground.

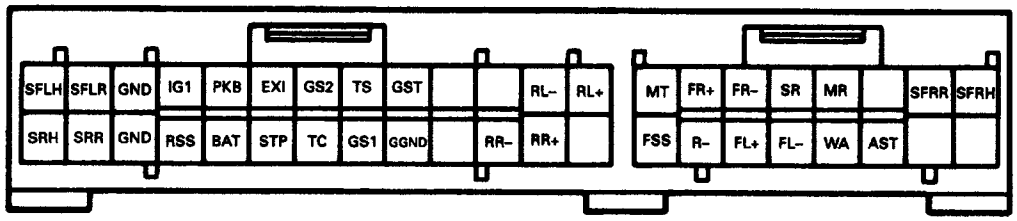

Tester Connection	Check item	Condition	Specified Value	Trouble Part
SFRH	Voltage	IG switch 4N and "ABS" warning light goes o	10 – 14 V	Actuator
SFRR	Voltage	IG switch ON and "ABS" warning light goes o	10 – 14 V	
SR	Voltage	IG switch ON and "A6S" warning light goes on	About 0 V	ABS ECU
		IG switch ON and "ABS" warning light goes off	10 – 14 V	
FR–	Continuity	!G switch OFF	Continuity	
RL–	Continuity	IG switch OFF	Continuity	
TS	Voltage	IG switch ON and data link connector 1 Ts –E1 not connected	10 – 14 V	
		IG switch ON and data link connector 1 Ts–E1 connected	About 0 V	
GS2	Voltage	IG switch ON	4 – 6 V	Deceleration Sensor
EXI	Voltage	IG switch ON and 4WD indicator light goes off	10 – 14 V	GAUGE Fuse
PKB	Voltage	IG switch ON and PKB lever pulled	About 0 V	Parking brake switch Level warning switch
		IG switch ON and PKB lever returned	10 – 14 V	
IG1	Voltage	1G switch ON	10 – 14 V	ECU–IG Fuse
SFLR	Voltage	IG switch ON and "ABS" warning light goes off	10 – 14 V	Actuator
SFLH	Voltage	IG switch ON and "ABS" warning light goes off	10 – 14 V	
AST	Voltage	IG switch ON and "A6S" warning light goes off	About 0 V	ABS ECU
		IG switch ON and 'ASS' warning light goes on	10 – 14 V	
WA	Voltage	IG switch ON and "ABS" warning light goes on	About 0 V	
		IG switch ON and "ABS" warning light goes off	10 – 14 V	
FL–	Continuity	IG switch OFF	Continuity	
R–	Continuity	IG switch OFF	Continuity	
FSS	Continuity	IG switch OFF	Continuity	
RR–	Continuity	IG switch OFF	Continuity	
GS1	Voltage	IG switch ON	4 – 6 V or 7 – 12 V	Deceleration Sensor
TC	Voltage	IG switch ON and data link connector 1 Tc–E1 not connected	10 – 14 V	ABS ECU
		IG switch ON and data link connector 1 Tc– E1 connected	About 0 V	
STP	Voltage	IG switch OFF and brake pedal depressed	8 – 14 V	Stop light switch Stop light
	Continuity	IG switch OFF and brake pedal returned	Continuity	
BAT	Voltage	IG switch OFF	10 – 14 V	DOME Fuse
RSS	Continuity	IG switch OFF	Continuity	ABS ECU
SRR	Voltage	IG switch ON and "ABS" warning light goes off	10 – 14 V	Actuator
SRH	Voltage	IG switch ON and "ABS" warning light goes off	10 – 14 V	

If the circuit is not as specified, check and repair or replace the trouble part shown in the table above.

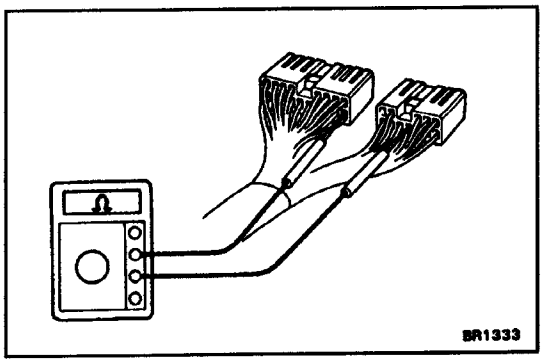

2. INSPECT SYSTEM CIRCUIT WITH CONNECTOR DISCONNECTED

(a) Disconnect the connectors from the ECU, inspect at the wire harness side connector.

Tester Connection	Check Item	Specified Value	Trouble Part	ster Connection	Check Item	Specified Value	Trouble Part
SFRH ↔ Body Ground	Resistance	About 5.0 Ω	Actuator	SFLR ↔ Body Ground	Resistance	About 2.2 Ω	Actuator
SFRR ↔ Body Ground	Resistance	About 2.2 Ω	Actuator	SFLH ↔ Body Ground	Resistance	About 5.0 Ω	Actuator
MR ↔ R–	Resistance	56 – 68 Ω	Control relay	AST ↔ Body Ground	Resistance	About 5.0 Ω	Actuator
SR ↔ R–	Resistance	72 – 88 Ω	Control relay	FL+ ↔ FL–	Resistance	0.89 – 1.29 kΩ	LN Front speed sensor
FR+ ↔ FR–	Resistance	0.89 – 1.29 kΩ	RH Front speed sensor	RR+ ↔ RR–	Resistance	1.05 – 1.45 kΩ	RH Rear speed sensor
MT ↔ Body Ground	Continuity	Continuity	Actuator	SRR ↔ Body Ground	Resistance	About 2.2 Ω	Actuator
RL+ ↔ RL–	Resistance	1.05 – 1.45 kΩ	LH Rear speed sensor	SRH ↔ Body Ground	Resistance	About 5.0 Ω	Actuator

If the circuit is not as specified, check and repair or replace the trouble part shown in the table above.

(b) Connect the connectors, and install the ECU in place.

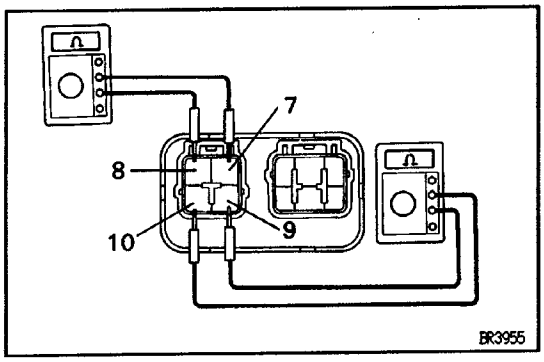

CONTROL RELAY

CONTROL RELAY INSPECTION

1. INSPECT CONTINUITY OF MOTOR RELAY CIRCUIT

(a) Check that there is continuity between terminals 9 and 10.

(b) Check that there is no continuity between terminals 7 and 8.

If continuity is not as specified, replace the relay.

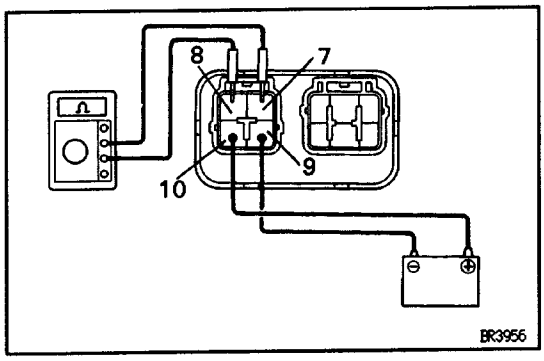

2. INSPECT OPERATION OF MOTOR RELAY CIRCUIT

(a) Connect the positive (+) lead from the battery to terminal 10 and negative (–) lead to terminal 9.

(b) Check that there is continuity between terminals 7 and 8.

If operation is not as specified, replace the relay.

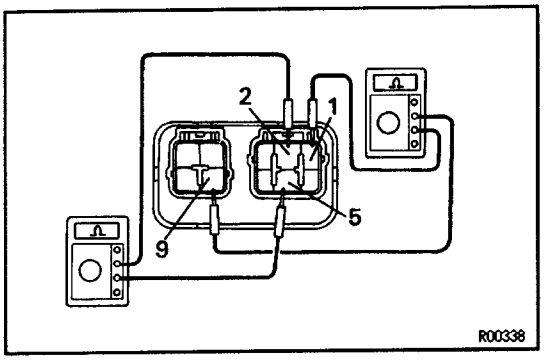

3. INSPECT CONTINUITY OF SOLENOID RELAY CIR–CUIT

(a) Check that there is continuity between terminals 1 and 9.

(b) Check that there is no continuity between terminals 2 and 5.

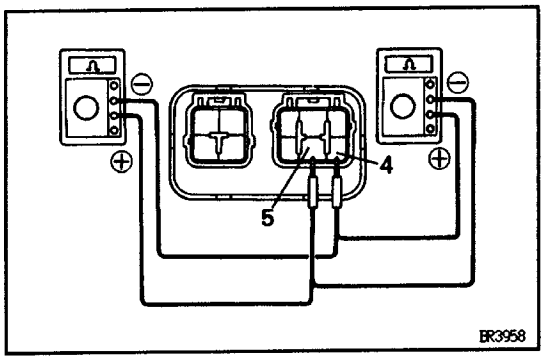

(c) Connect the positive lead from the ohmmeter to ter–minal 5 and connect negative lead to terminal 4.

(d) Check that there is continuity between terminals.

(e) Connect the 2 leads in reverse, and check that there is no continuity between terminals.

If continuity is not as specified, replace the relay.

HINT: For the different type ohmmeter, there is no continuity for step (d), and there is continuity for step (e).

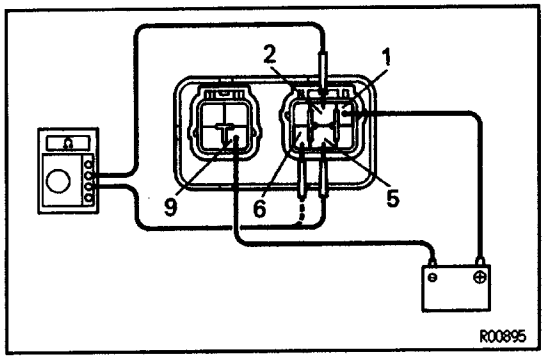

4. INSPECT OPERATION OF SOLENOID RELAY CIR–CUIT

(a) Connect the positive (+) lead from the battery to terminal 1 and negative (–) lead to terminal 9.

(b) Check that there is continuity between terminals 2 and 5.

(c) Check that there is no continuity between terminals 2 and 6.

If operation is not as specified, replace the relay.

DECELERATION SENSOR

COMPONENTS

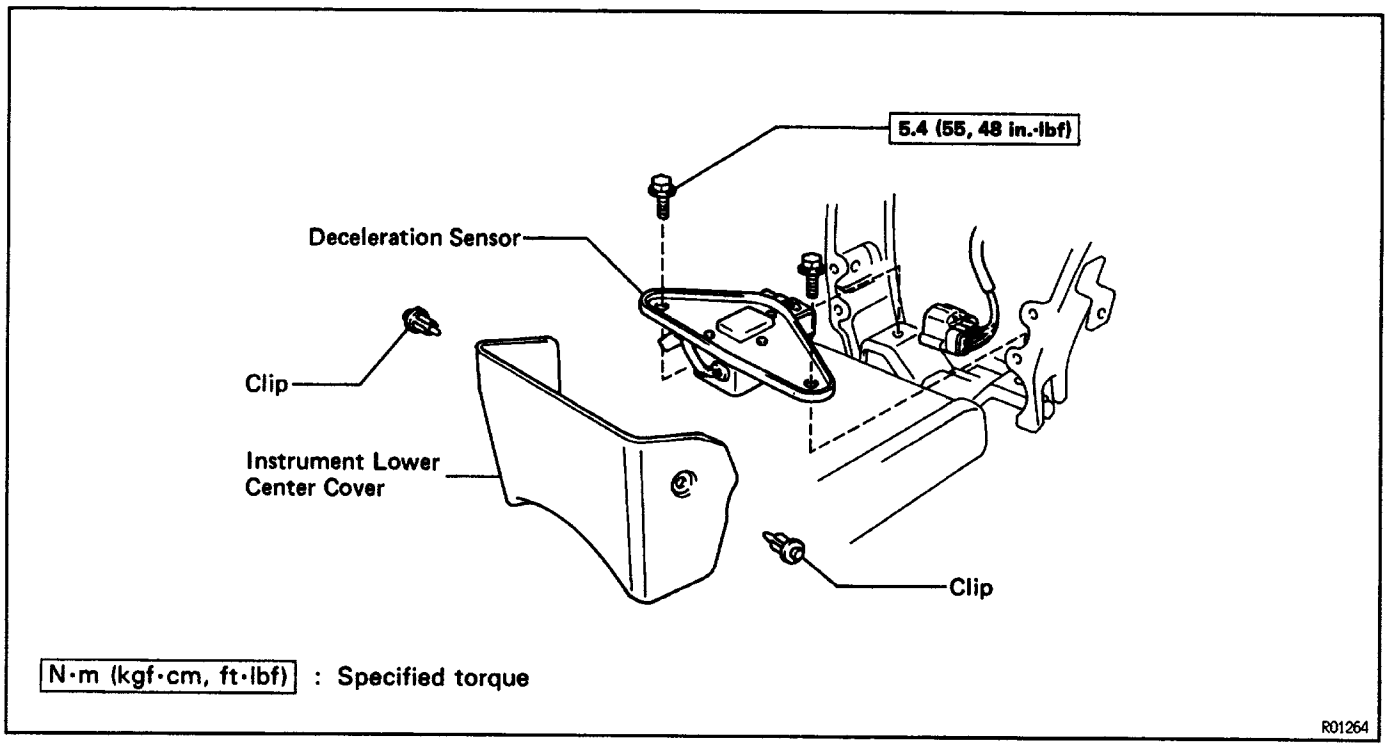

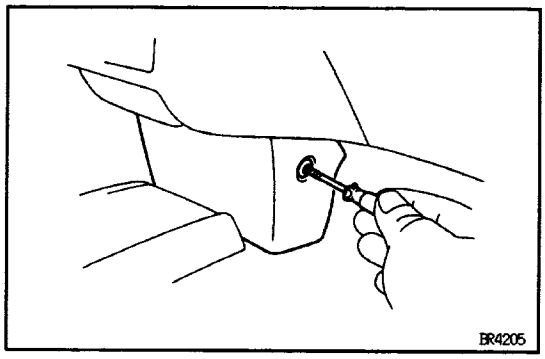

DECELERATION SENSOR INSPECTION

INSPECT SENSOR INSTALLATION

(a) Remove the 2 clips, then remove the instrument lower center cover.

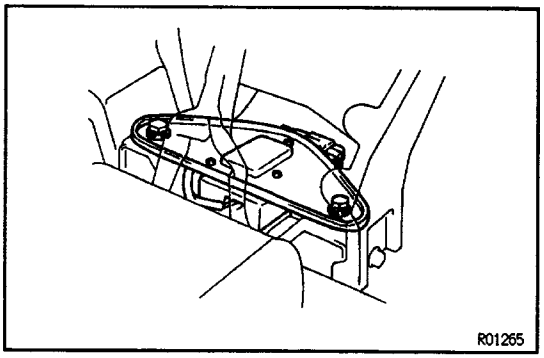

(b) Inspect that the sensor direction is correct.

(c) Check that the sensor installation bolts are tightened properly.

If not, tighten the bolts.

Torque: 5.4 N–m (55 kgf–cm, 48 in.–lbf)

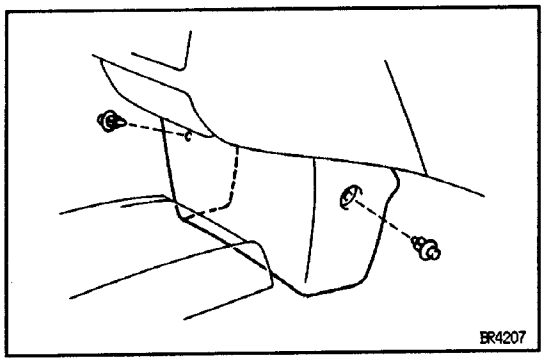

(d) Install the instrument lower center cover and 2 clips.

DECELERATION SENSOR OPERATION DIAGNOSIS SYSTEM

PRECAUTION

While checking the deceleration sensor operating diagnosis system, the Anti–lock Brake System does not work and brake system works as a normal brake system.

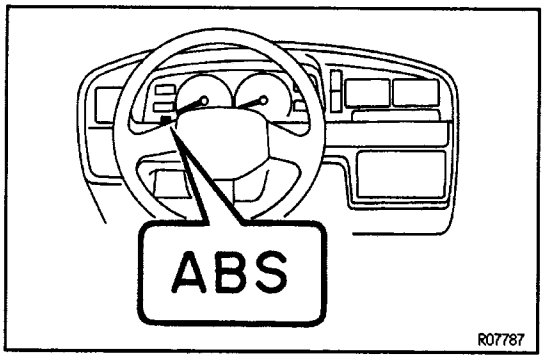

DIAGNOSIS SYSTEM INSPECTION

1. INSPECT BATTERY POSITIVE VOLTAGE

Inspect that the battery positive voltage is 10 – 14 V.

2. CHECK THAT WARNING LIGHT TURNS ON

(a) Turn the ignition switch ON.

(b) Check that the ”ABS” warning light turns on for about 3 seconds.

If not, inspect and repair or replace the fuse, bulb and wire harness.

(c) Check that the ’ABS’ warning light turns off.

(d) Turn the ignition switch OFF.

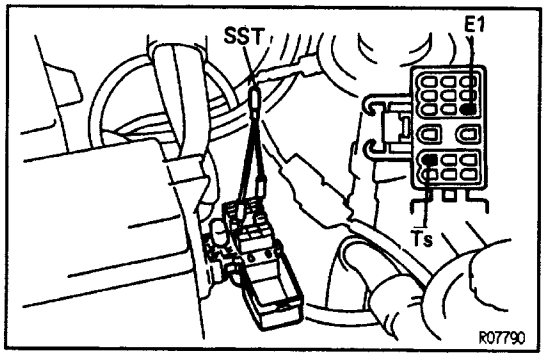

3. DO THE FOLLOWING STEPS

(a) Using SST, connect the terminal Ts and E1 of the data link connector 1.

SST 09843–18020

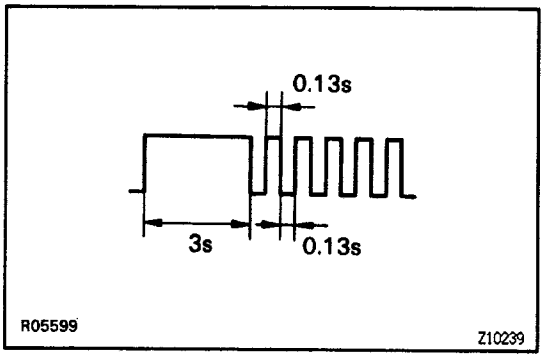

(b) Check that the warning light blinks about 4 times every second from 3 seconds after the engine is started.

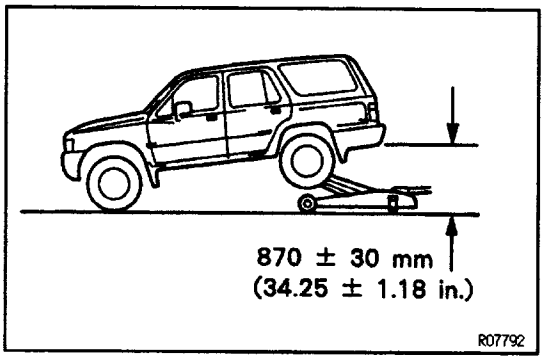

4. INSPECT SENSOR DETECTION POINT

(a) Jack up the rear side of the vehicle slowly.

HINT: When measuring the height, measure at the center of the lower body of the vehicle.

(b) Check that the warning light blinks.

If the warning light turns on, inspect the deceleration sensor installation. If the sensor installation is OK, replace the deceleration sensor.

(c) Jack down the vehicle slowly.

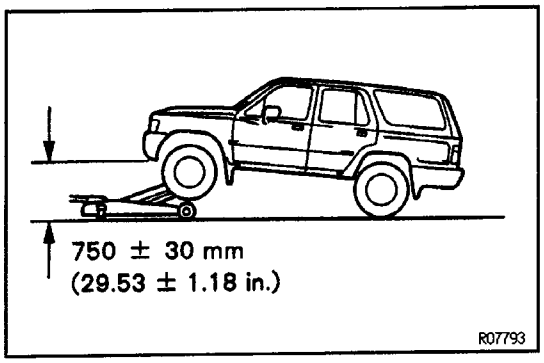

(d) Jack up the front side of the vehicle slowly, as shown.
HINT: When measuring the height, measure at the center of the lower body of the vehicle.
(e) Check that the warning light blinks.
If the warning light turns on, inspect the deceleration sensor installation. If the sensor installation is OK, replace the deceleration sensor.
(f) Jack down the vehicle slowly.

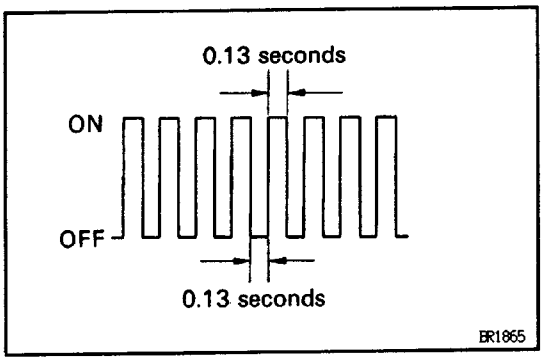

5. INSPECT SENSOR OPERATION

(a) Drive the vehicle straight ahead at about 20 km/h (12.4 mph) or more, lightly depress the brake pedal.
(b) Check that there is no change in the warning light pattern.

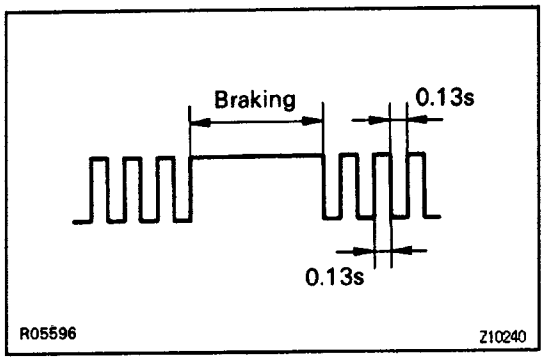

(c) Drive the vehicle straight ahead at about 20 km/h (12.4 mph) or more, and depress the brake pedal moderately hard.
(d) Check that the warning light turns on while braking.

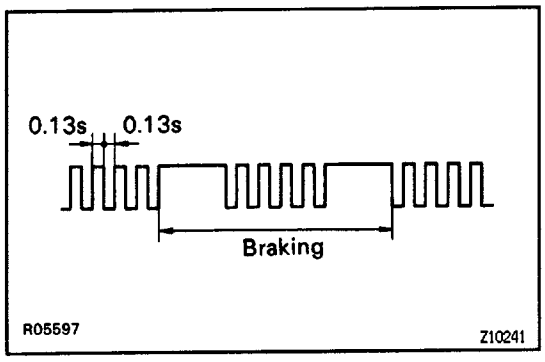

(e) Drive the vehicle straight ahead at about 20 km/h (12.4 mph) or more, and depress the brake pedal strongly.
(f) Check that the warning light pattern changes while braking, as shown.
If the operation is not as specified, inspect the deceleration sensor installation. If the sensor installation is OK, replace the deceleration sensor.

6. DO THE FOLLOWING STEPS

(a) Stop the vehicle and turn the ignition switch OFF.
(b) Remove SST from the terminals Ts and E1 of the data link connector 1.
SST 09843–18020

4–WHEEL ANTI–LOCK BRAKE SYSTEM

DESCRIPTION

- ABS is a brake system which controls the brake cylinder hydraulic pressure of all 4 wheels during sudden braking and braking on slippery road surfaces, preventing the wheels from locking. ABS provides the following benefits:
  (1) Steering round an obstacle with a greater degree of certainty even when panic braking.
  (2) Stopping in a panic brake while keeping the effect upon stability and steerability to a minimum, even on curves.
- The ABS has a longitudinal deceleration sensor to match braking characteristics to the 4 wheel drive.
- In case a malfunction occurs, a diagnosis function and fail–safe system have been adopted for the ABS.

COMPONENTS FUNCTION

Component	Function
Front Speed Sensor	Detect the wheel speed of each of the left and right front wheels.
Rear Speed Sensor	Detect the wheel speed of each of the left and right rear wheels.
ABS Warning Light	Lights up to alert the driver when trouble has occurred in the Anti–Lock Brake System.
Actuator	Controls the brake fluid pressure to each brake cylinder through signals from the ECU.
ABS ECU	From the wheel speed signals from each speed sensor and vehicle deceleration signals from the deceleration sensor, it calculates acceleration,deceleration and slip values and sends signals to the actuator to control brake fluid pressure.
Deceleration Sensor	Detect the deceleration speed of the vehicle and sends a signal accordingly to the ABS ECU.

SYSTEM PARTS LOCATION

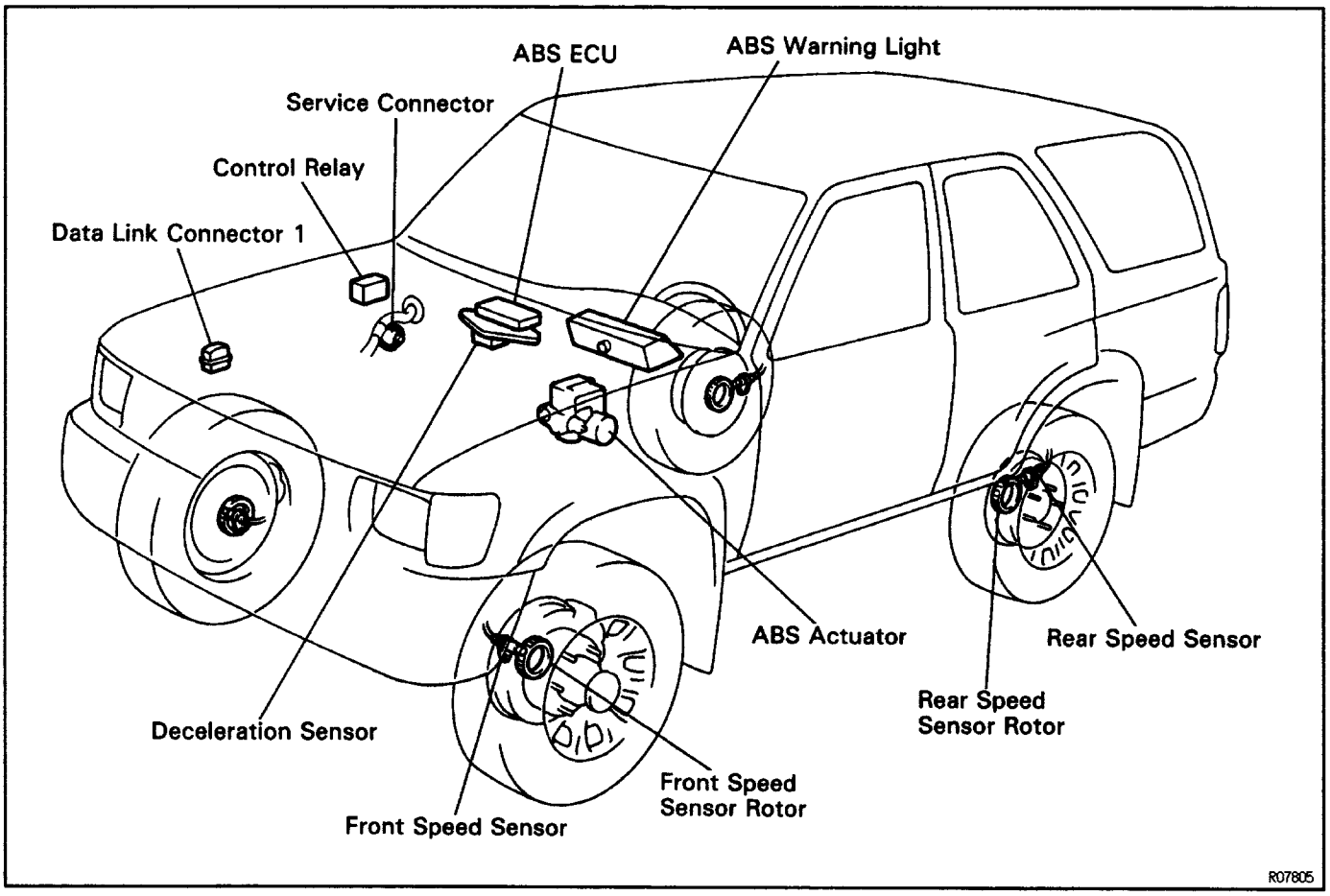

WIRING DIAGRAM

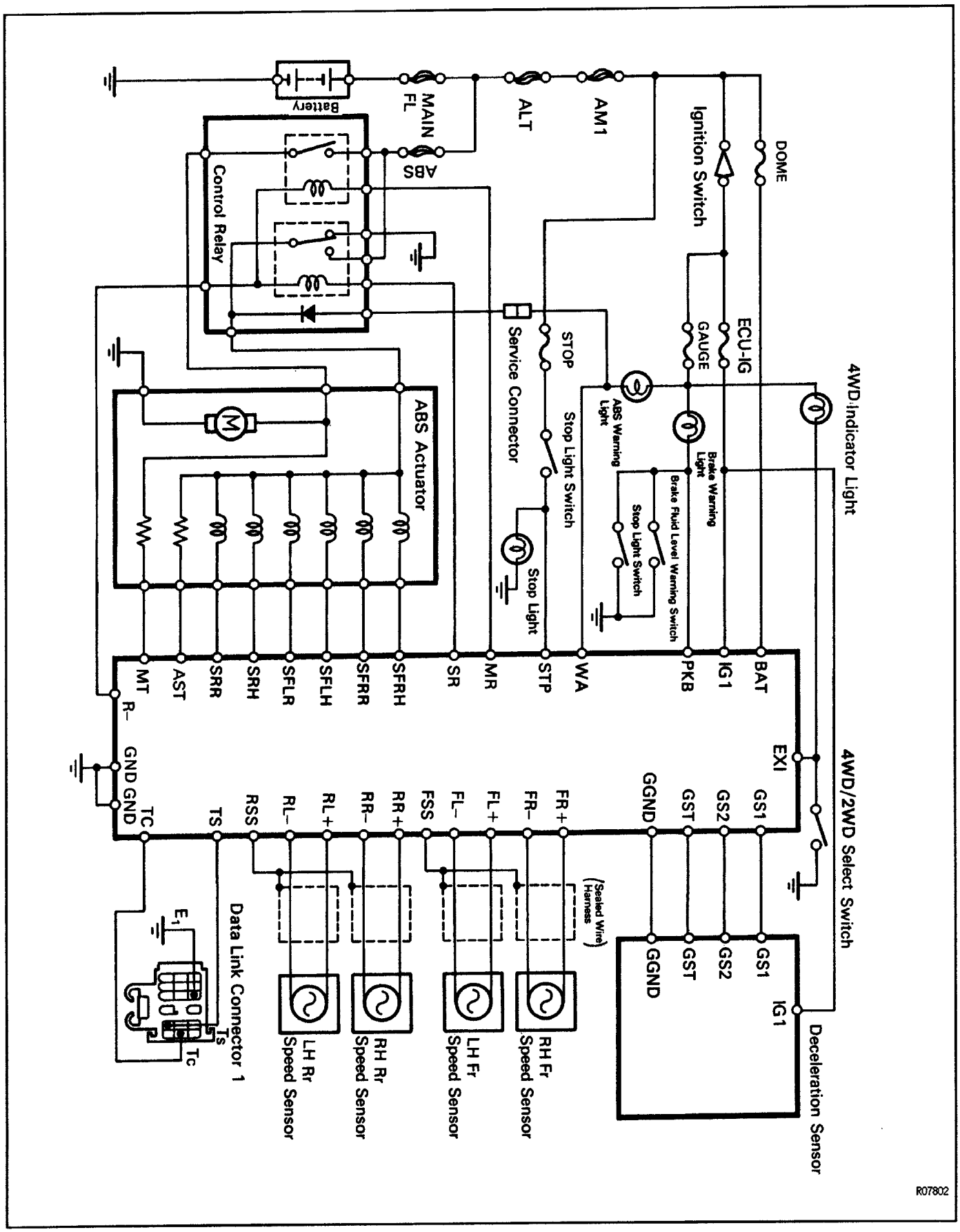

CONNECTORS

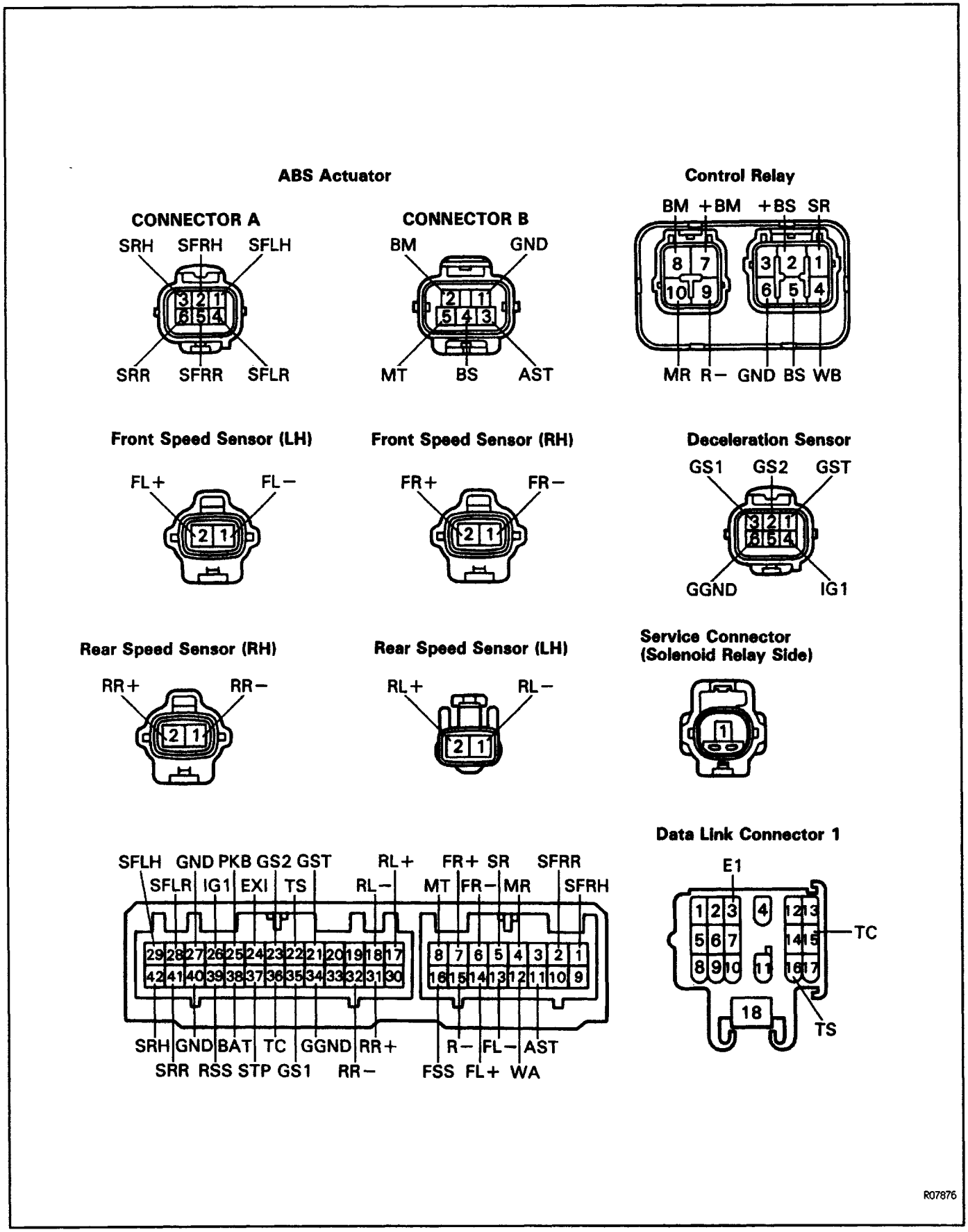
ABS Actuator
CONNECTOR A
SRH SFRH SFLH
3 2 1
6 5 4
SRR SFRR SFLR
CONNECTOR B
BM GND
2 1
5 4 3
MT BS AST
Control Relay
BM +BM +BS SR
8 7 3 2 1
10 9 6 5 4
MR R– GND BS WB
Front Speed Sensor (LH)
FL+ FL–
2 1
Front Speed Sensor (RH)
FR+ FR–
2 1
Deceleration Sensor
GS1 GS2 GST
3 2 1
6 5 4
GGND IG1
Rear Speed Sensor (RH)
RR+ RR–
2 1
Rear Speed Sensor (LH)
RL+ RL–
2 1
Service Connector
(Solenoid Relay Side)
1
SFLH GND PKB GS2 GST RL+ FR+ SR SFRR
SFLR IG1 EXI TS RL– MT FR– MR SFRH
29 28 27 26 25 24 23 22 21 20 19 18 17 8 7 6 5 4 3 2 1
42 41 40 39 38 37 36 35 34 33 32 31 30 16 15 14 13 12 11 10 9
SRH GND BAT TC GGND RR+ R– FL– AST
SRR RSS STP GS1 RR– FSS FL+ WA
Data Link Connector 1
E1
1 2 3 4 12 13
5 6 7 14 15
8 9 10 11 16 17
TC
18
TS
R07876

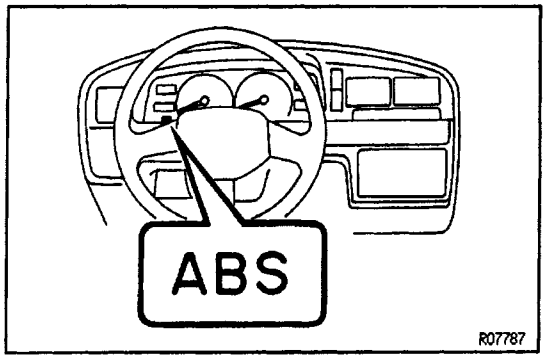

DIAGNOSIS SYSTEM

DESCRIPTION

If a malfunction occurs, the system will identify the problem and the ECU will store the codes for the trouble items.

At the same time, the system informs the driver of a malfunction via the "ABS" warning light in the combination meter.

By turning ON the ignition switch, disconnecting the service connector and using SST to connect Tc and E1 of the data link connector 1, the trouble can be identified by the number of blinks (diagnostic trouble code) of the warning light.

In the event of 2 codes, that having the smallest numbered code will be identified 1 st.

HINT: The warning light does not show the diagnostic trouble codes while the vehicle is running.

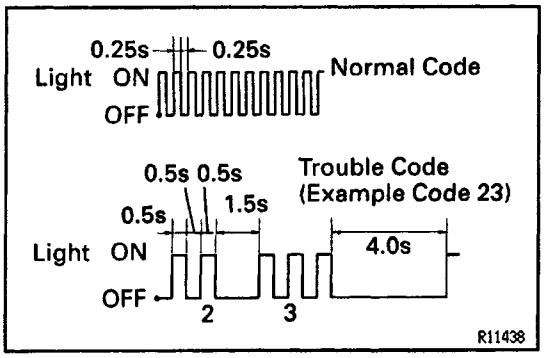

DIAGNOSIS SYSTEM INSPECTION

1. INSPECT BATTERY POSITIVE VOLTAGE

Inspect that the battery positive voltage is 10 – 14 V.

2. CHECK THAT WARNING LIGHT TURNS ON

(a) Turn the ignition switch ON.

(b) Check that the "ABS" warning light turns on for 3 seconds.

If not, inspect and repair or replace the fuse, bulb and wire harness.

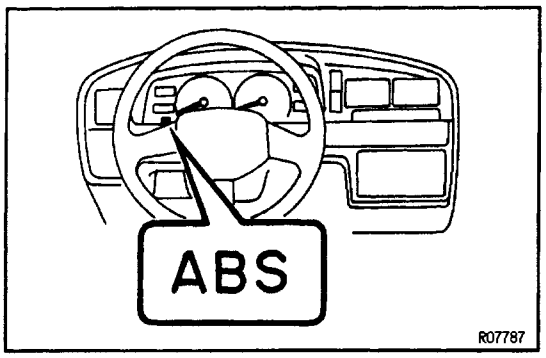

3. READ DIAGNOSTIC TROUBLE CODE

(a) Turn the ignition switch ON.

(b) Disconnect the service connector.

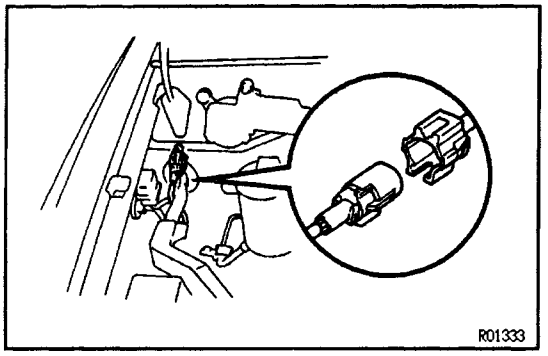

(c) Using SST, connect terminals Tc and E1 of the data link connector 1.

SST 09843–18020

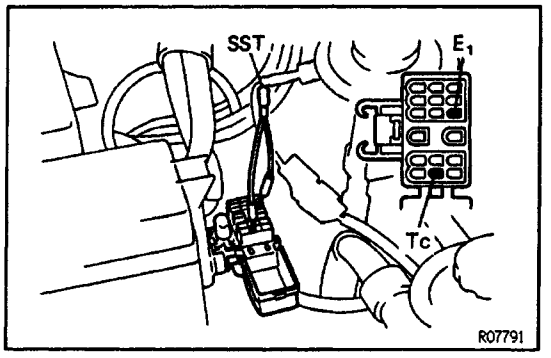

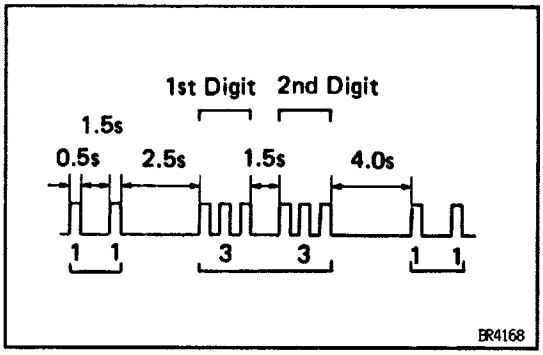

(d) In event of a malfunction, 4 seconds later the warning light will begin to blink. Read the number of blinks. (See page BR–79)

HINT: The 1 st number of blinks will equal the 1 st digit of a 2 digit diagnostic trouble code. After a 1.5 second pause, the 2nd number of blinks will equal the 2nd number of a 2 digit code. If there are 2 or more codes, there will be a 2.5 second pause between each, and indication will begin after 4.0 second pause from the smaller value and continue in order to larger.

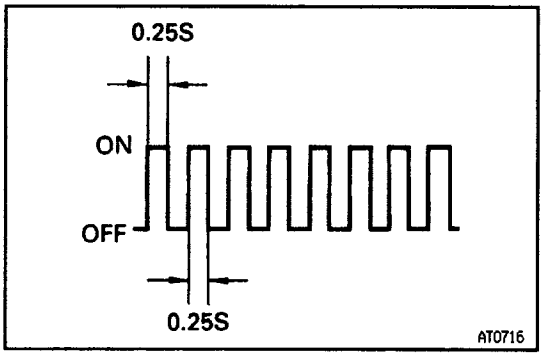

(e) If the system is operating normally (no malfunction), the warning light will blink once every 0.5 seconds.

(f) Repair the system.

(g) After the malfunctioning components has been repaired, clear the diagnostic trouble codes stored in the ECU.
(See page BR–80)

HINT: If you disconnect the battery cable while repairing, all diagnostic trouble codes in the ECU will erased.

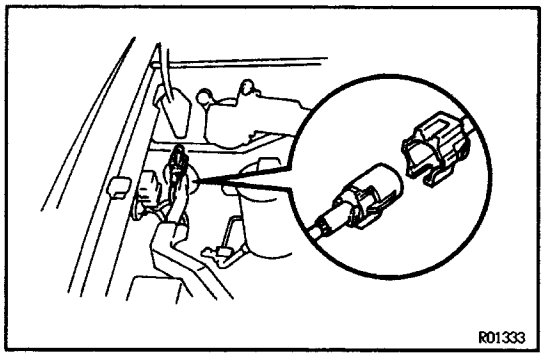

(h) Remove the SST from terminals Tc and E1 of the data link connector 1.
SST 09843–18020

(i) Connect the service connector.

(j) Turn the ignition switch ON, and check that the ”ABS” warning light goes off after the warning light goes on for 3 seconds.

DIAGNOSTIC TROUBLE CODE

HINT: Using SST 09843–18020, connect the terminals Tc and E1, and disconnect the service connector.

Code No.	Light Pattern	Diagnosis	Trouble Part
11		Open circuit in solenoid relay circuit	• Actuator inside wire harness • Solenoid relay • Wire harness and connector of solenoid relay circuit (Include AST circuit)
12		Short circuit in solenoid relay circuit	
13		Open circuit in pump motor relay circuit	• Actuator inside wire harness • Pump motor relay • Wire harness and connector of pump motor relay circuit (include MT circuit)
14		Short circuit in pump motor relay circuit	
21		Open or short circuit in 2 position solenoid of right front wheel	• Actuator solenoid • Wire harness and connector of actuator solenoid circuit
22		Open or short circuit in 2 position solenoid of left front wheel	
23		Open or short circuit in 2 position solenoid of rear wheel	
31		Right front wheel speed sensor signal malfunction	• Speed sensor • Sensor rotor • Wire harness and connector of speed sensor
32		Left front wheel speed sensor signal malfunction	
33		Right rear wheel speed sensor signal malfunction	
34		Left rear wheel speed sensor signal malfunction	
35		Open circuit in left front or right rear wheel speed sensor	
36		Open circuit in right front or left rear wheel speed sensor	
37		Neither front speed sensor rotor is missing	• Front sensor rotor
41		Abnormally high or low battery voltage	• Battery • Voltage regulator
43		Malfunction in deceleration sensor	• Deceleration sensor • Deceleration sensor installation • Wire harness and connector of deceleration sensor
44		Open or short circuit in deceleration sensor	
51		Pump motor of actuator locked or open circuit in pump motor circuit in actuator	• Pump motor, relay and battery • Wire harness, connector and • Ground bolt or actuator pump motor circuit • (Include MT circuit)
Always on		Malfunction in ECU	• ECU

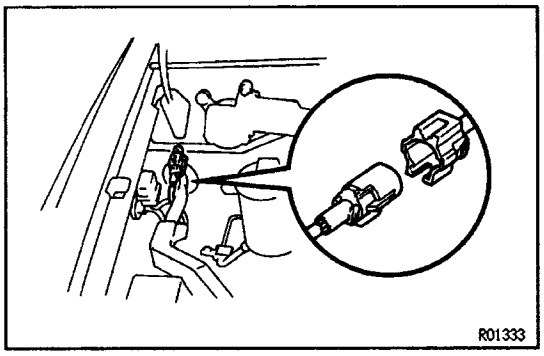

DIAGNOSTIC TROUBLE CODES CLEARING

CLEAR DIAGNOSTIC TROUBLE CODES

(a) Turn the ignition switch ON.
(b) Disconnect the service connector.
HINT: Keep the vehicle stationary.

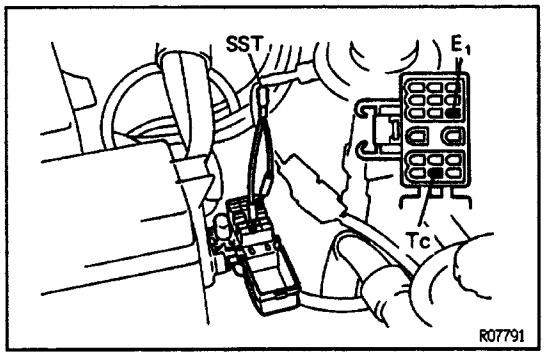

(c) Using SST, connect terminals Tc and E1 of the data link connector 1.
SST 09843–18020

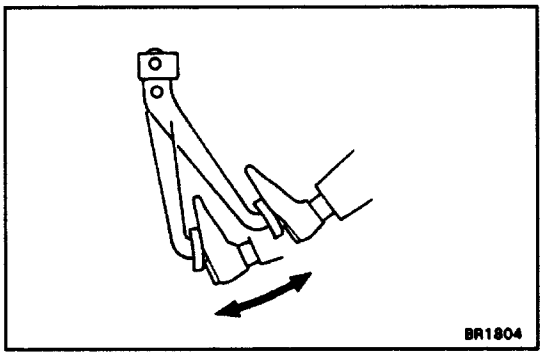

(d) Clear the diagnostic trouble codes stored in ECU by depressing the brake pedal 8 or more times within 3 seconds.
HINT: Cancellation can also be done by removing the DOME fuse, but in this case, other memory systems will also be cancelled out.

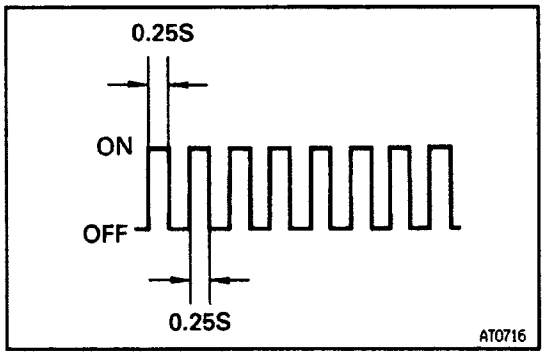

(e) Check that the warning light shows the normal code.

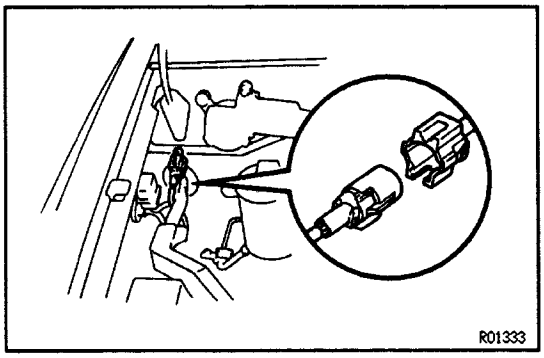

(f) Remove the SST from terminals Tc and E1 of the data link connector 1.
SST 09843–18020
(g) Connect the service connector.
(h) Check that the warning light goes off.

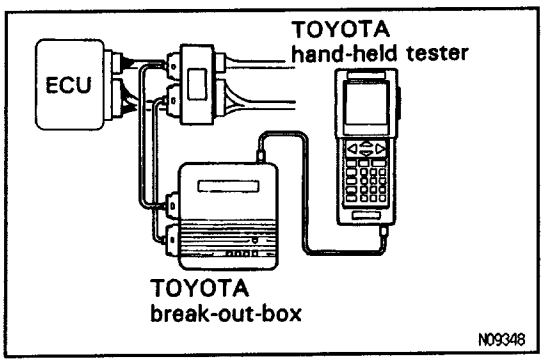

ECU TERMINAL VALUES MEASUREMENT USING TOYOTA BREAK–OUT–BOX AND TOYOTA HAND–HELD TESTER

1. Hookup the TOYOTA hand–held tester and TOYOTA break–out–box to the vehicle.
2. Read the ECU input/output values by following the prompts on the tester screen.
   HINT: TOYOTA hand–held tester has a ”Snapshot” function. This records the measured values and is effective in the diagnosis of intermittent problems.
   Please refer to the TOYOTA hand – held tester / TOYOTA break–out–box operator’s manual for further details.

TROUBLESHOOTING

Problem		No.
”A6S” warning light	Always comes on after ignition switched ON .	1
	Does not come on for 3 seconds after ignition switched ON .	2
	Goes on and off.	3
	Comes on while running.	1
Brake condition	Brakes pull. *	4
	Braking inefficient.*	4
	A8S operates during normal braking.	4
	A6S operates just before stopping during normal braking.	4
	Brake pedal pulsates abnormally while ABS is operating.	4
	Skidding noise occurs while ABS operating. (ABS operates inefficiently)	5

*Also check the parts of the brake system (brake cylinders, pads, hydraulic lines, etc.) not specifically part of the ABS.

1	”ABS” warning light comes ON.

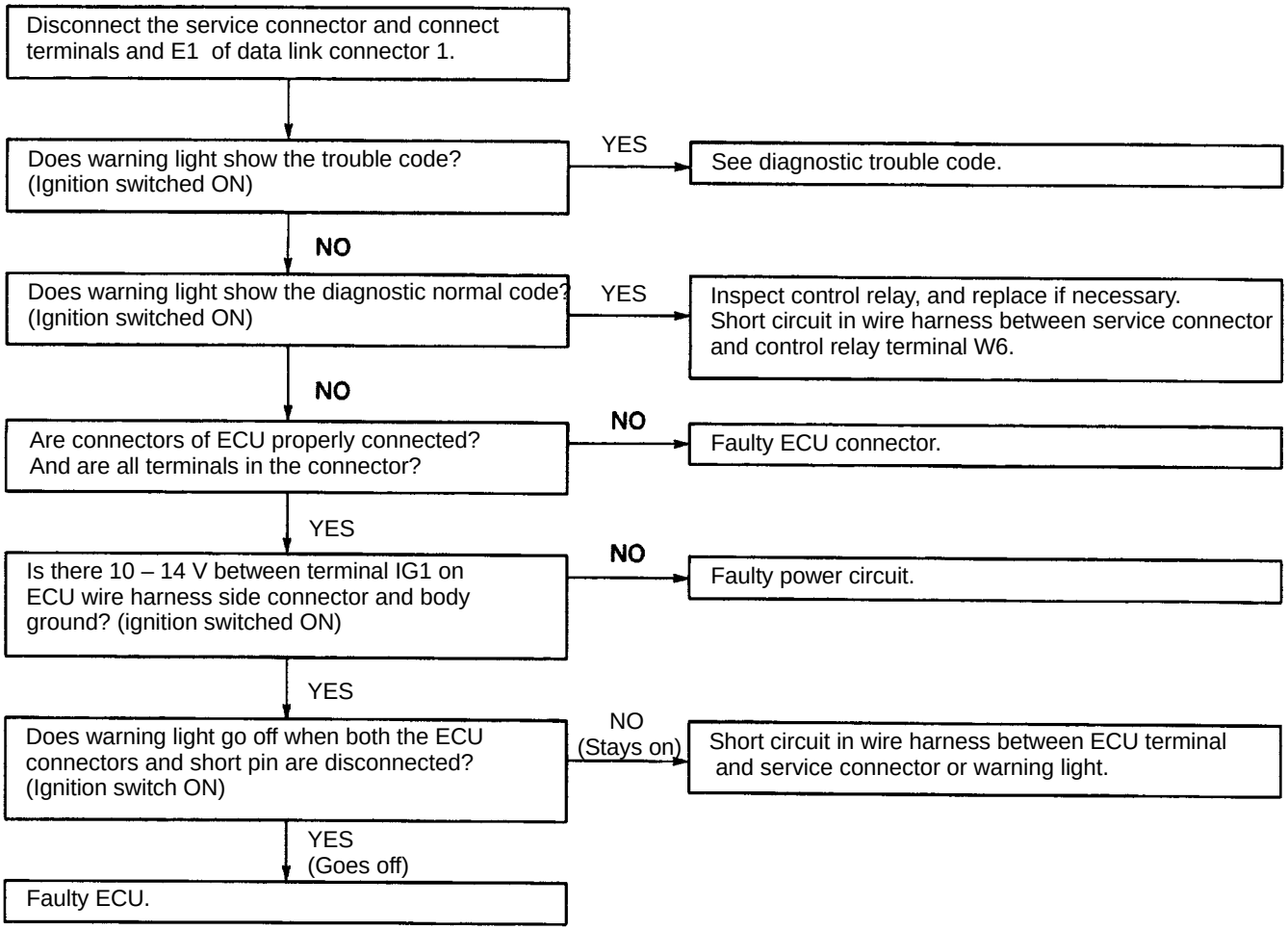

2	”ABS” warning light does not come on for 3 seconds after ignition switched ON.

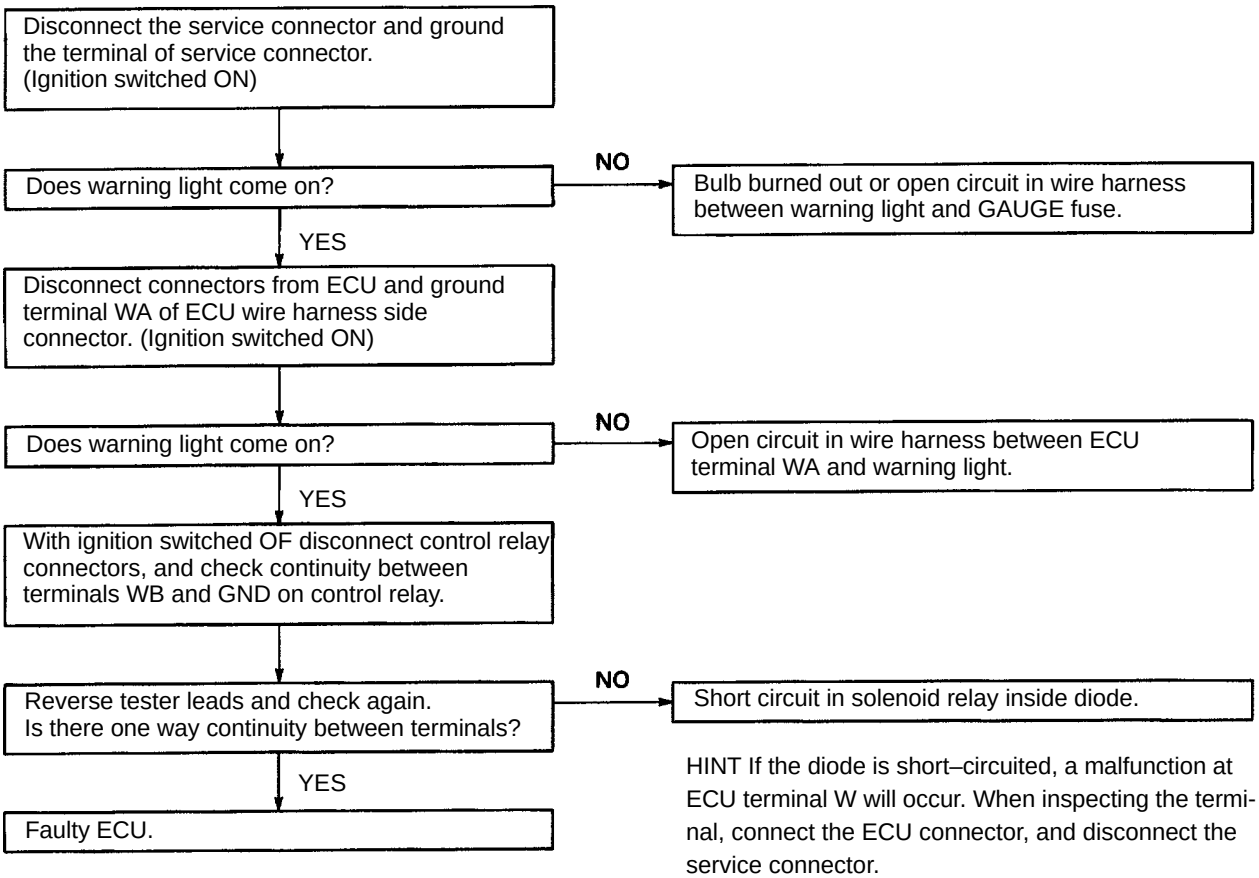

HINT If the diode is short–circuited, a malfunction at ECU terminal W will occur. When inspecting the terminal, connect the ECU connector, and disconnect the service connector.
Then turn the ignition switch on, and check that the warning light goes on. If it does, the ECU terminal is OK.

3	”ABS” warning light goes on and off.

Check for short circuit in wire harness between terminal or and E1 of data link connector 1

4	• Brakes pull. • Braking inefficient. • ABS operates during normal braking. • ABS operates just before stopping during normal braking. • Brake pedal pulsates abnormally while ABS is operating.

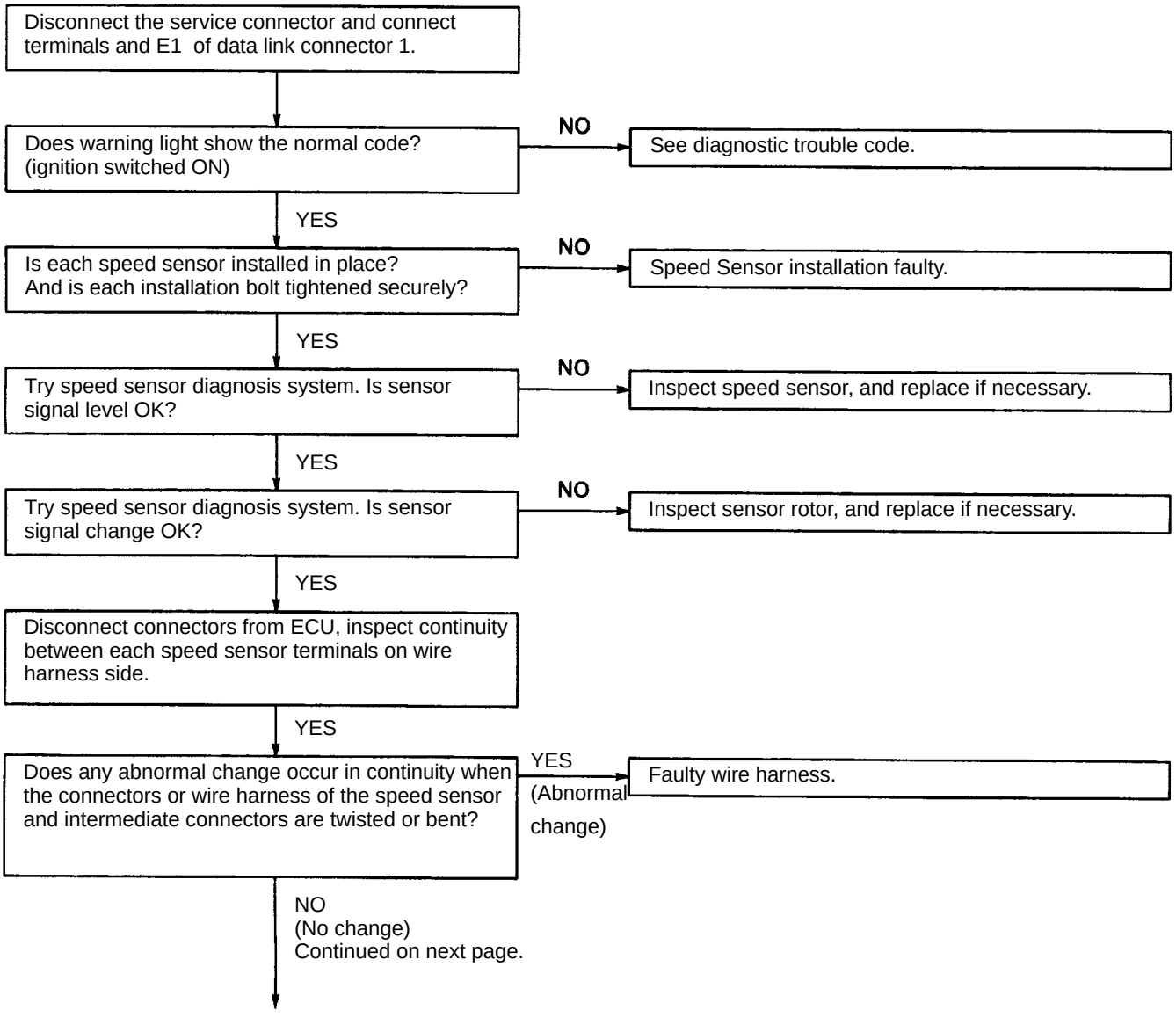

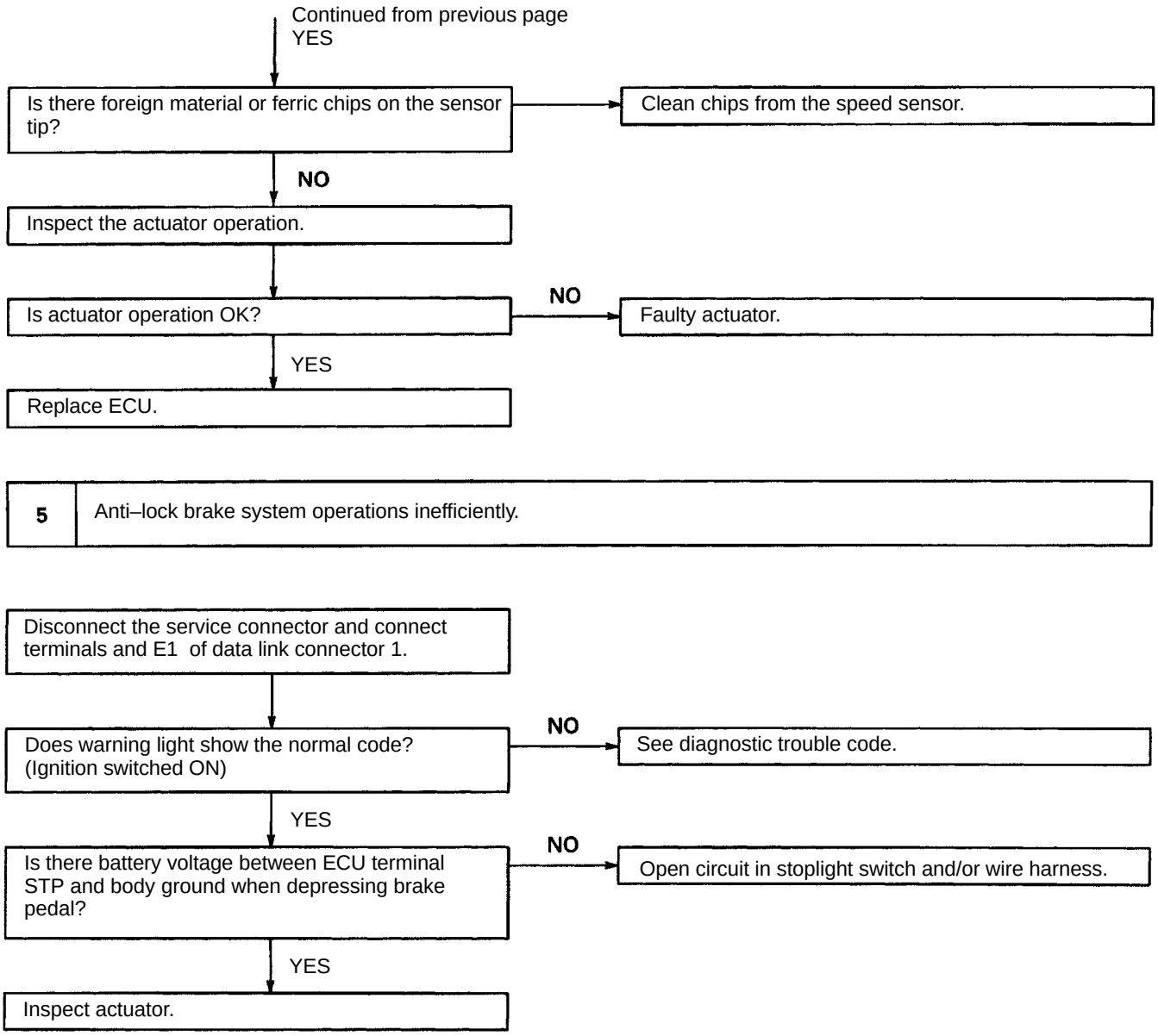
Continued from previous page
YES
Is there foreign material or ferric chips on the sensor tip?
Clean chips from the speed sensor.
NO
Inspect the actuator operation.
Is actuator operation OK?
NO
Faulty actuator.
YES
Replace ECU.
5
Anti–lock brake system operations inefficiently.
Disconnect the service connector and connect terminals and E1 of data link connector 1.
Does warning light show the normal code? (Ignition switched ON)
NO
See diagnostic trouble code.
YES
Is there battery voltage between ECU terminal STP and body ground when depressing brake pedal?
NO
Open circuit in stoplight switch and/or wire harness.
YES
Inspect actuator.

FRONT SPEED SENSOR

COMPONENTS

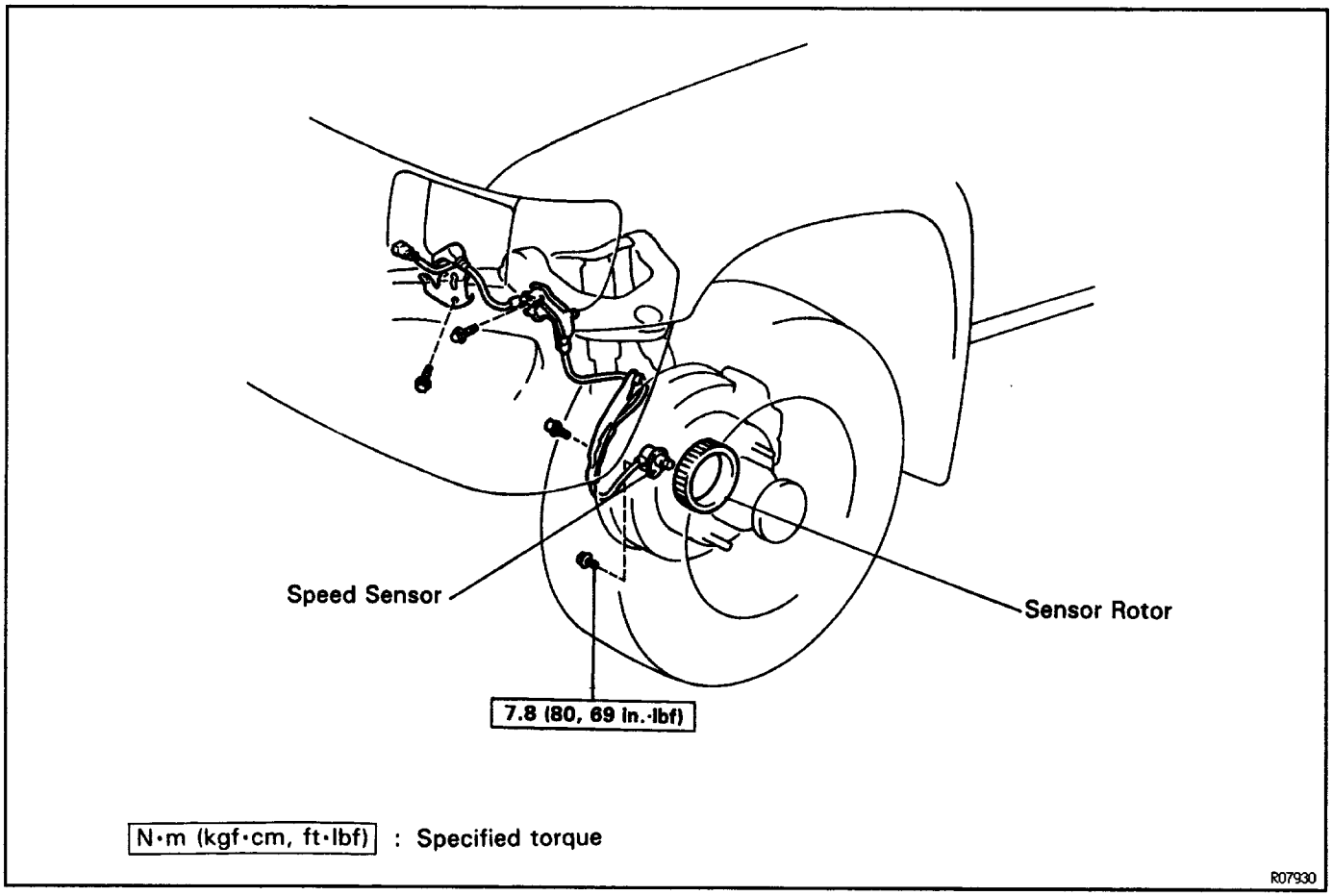

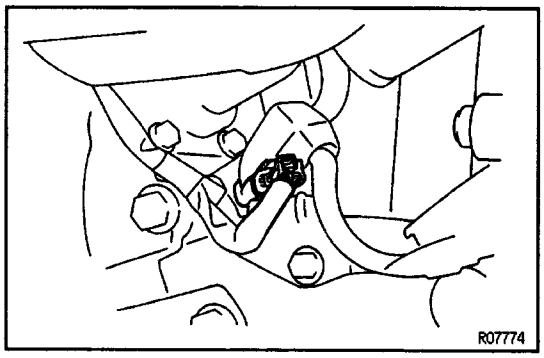

FRONT SPEED SENSOR INSPECTION

1. INSPECT SPEED SENSOR

(a) Disconnect the speed sensor connector.

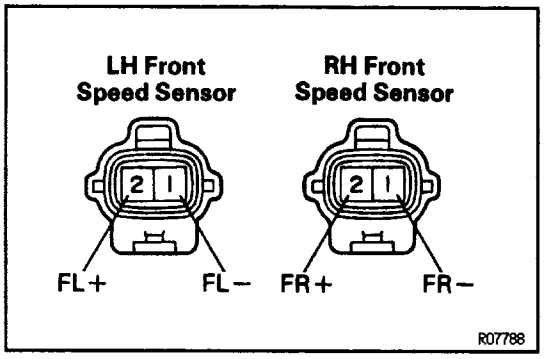

(b) Measure the resistance between terminals.

Resistance:

0.92–1.22 kΩ

If resistance value is not as specified, replace the sensor.

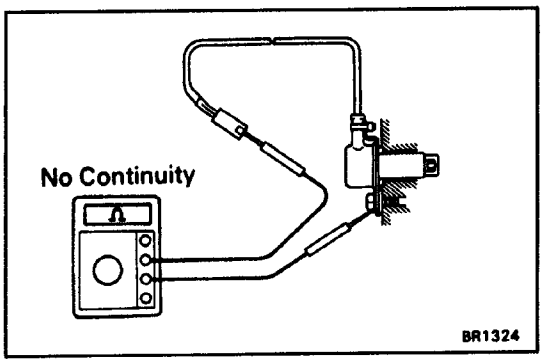

(c) Check that there is no continuity between each terminal and sensor body.
If there is continuity, replace the sensor.
(d) Connect the speed sensor connector.

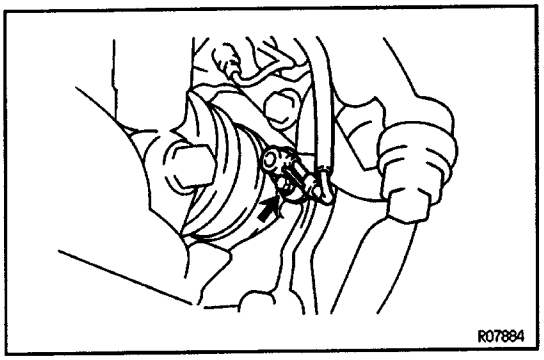

2. INSPECT SENSOR INSTALLATION

Check that the sensor installation bolt is tightened properly. If not, tighten the bolt.
Torque: 7.8N–m (80 kgf–cm, 189 in.–lbf)

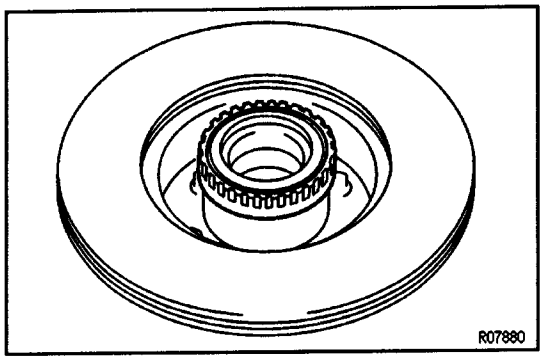

3. VISUALLY INSPECT SENSOR ROTOR SERRATIONS

(a) Remove the axle hub with disc.
(See page SA–13)
(b) Inspect the sensor rotor serrations for scratches, cracks, warping or missing teeth.
(c) Install the axle hub with disc.
(See page SA–16)

4. CHECK SPEED SENSOR SIGNAL

(See page BR–86)

FRONT SPEED SENSOR REMOVAL

1. DISCONNECT SPEED SENSOR CONNECTOR

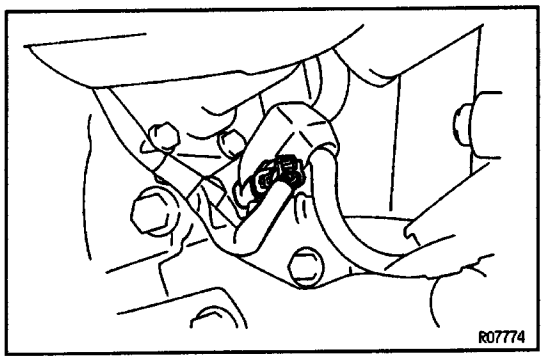

2. REMOVE SPEED SENSOR

(a) Remove the 3 clamp bolts holding the sensor harness from the frame, upper suspension arm and steering knuckle.

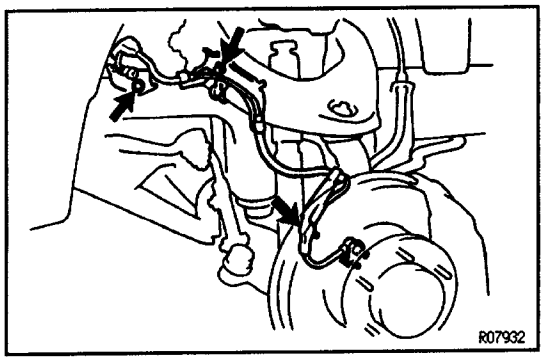

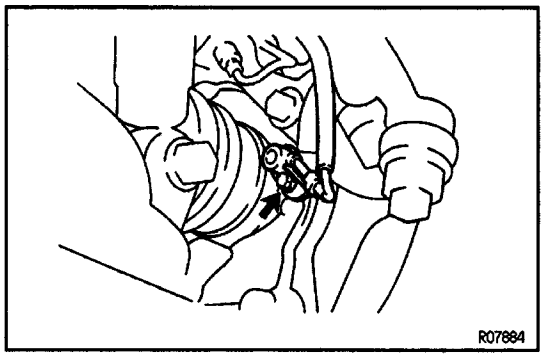

(c) Remove the speed sensor from the steering knuckle.

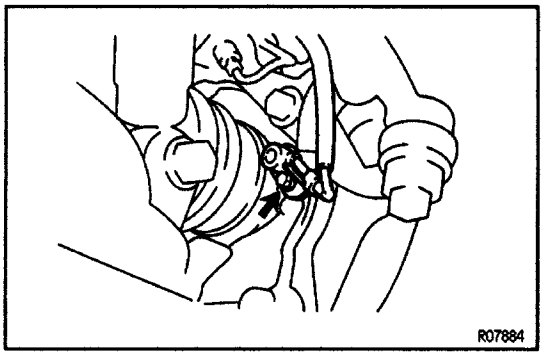

FRONT SPEED SENSOR INSTALLATION

1. INSTALL SPEED SENSOR

(a) Install the speed sensor to the steering knuckle.

Torque: 7.8 N–m (80 kgf–cm, 69 in–lbf)

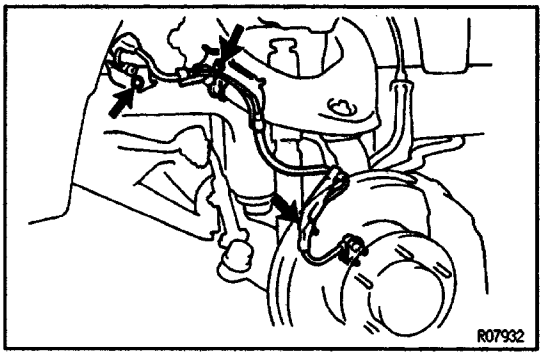

2. INSTALL SPEED SENSOR CONNECTOR

(a) Install the sensor harness with clamps and bolts.

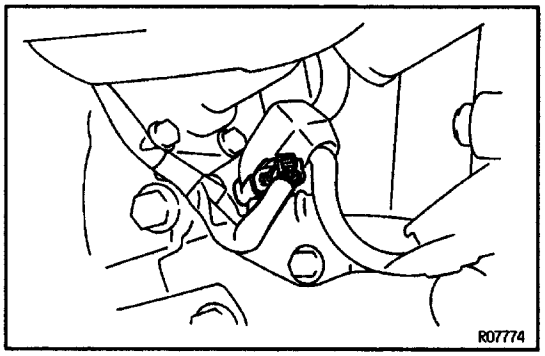

(b) Connect the speed sensor connector.

3. CHECK SPEED SENSOR SIGNAL

(See page BR–86**)**

REAR SPEED SENSOR

COMPONENTS

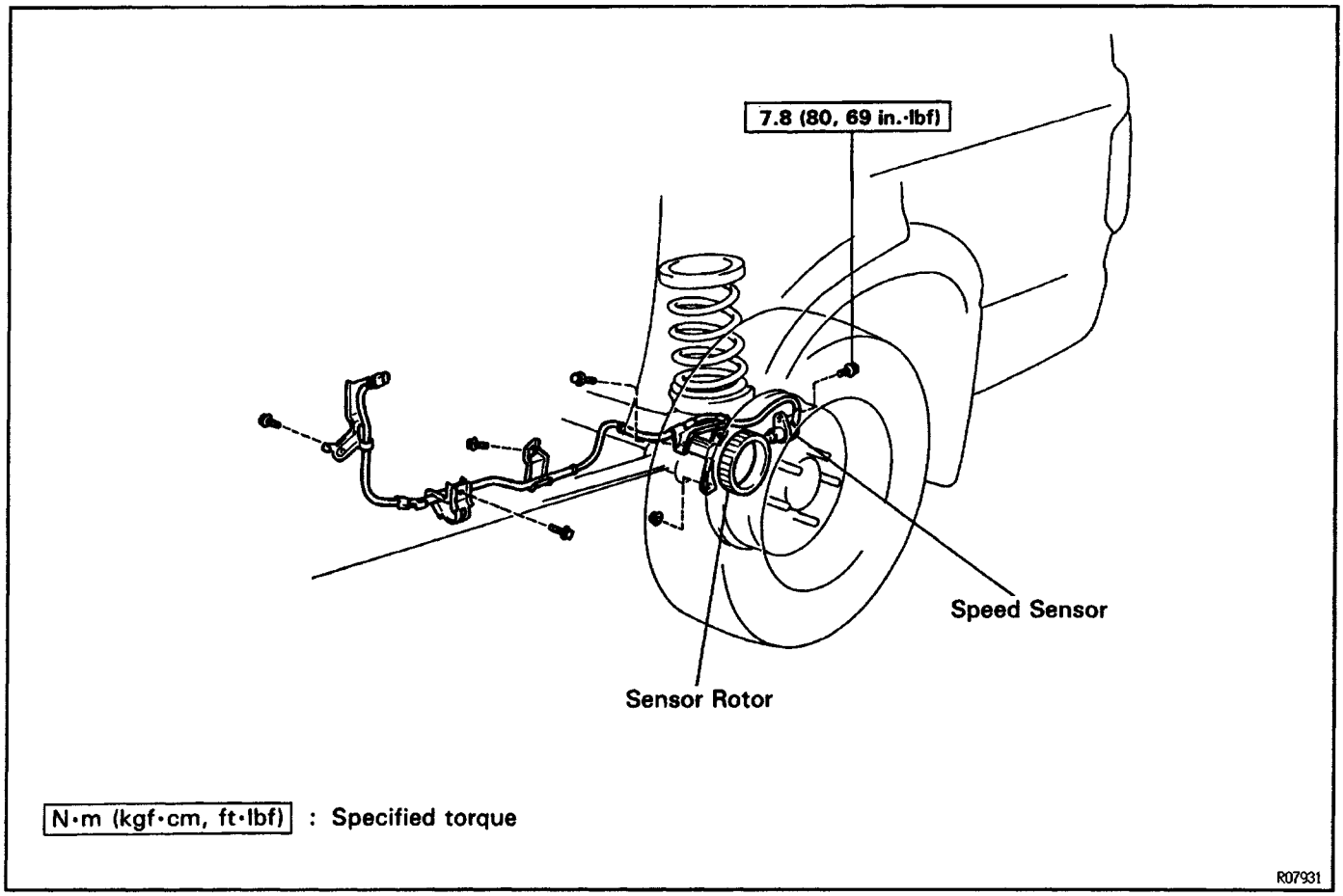

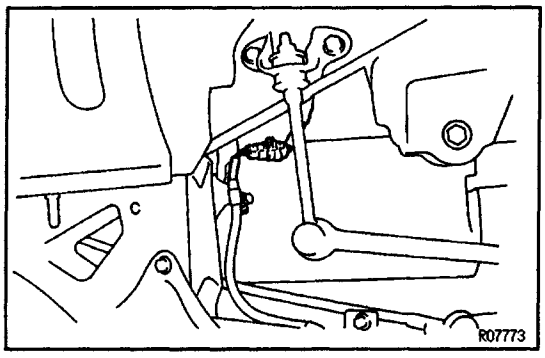

REAR SPEED SENSOR INSPECTION

1. INSPECT SPEED SENSOR

(a) Disconnect the speed sensor connector.

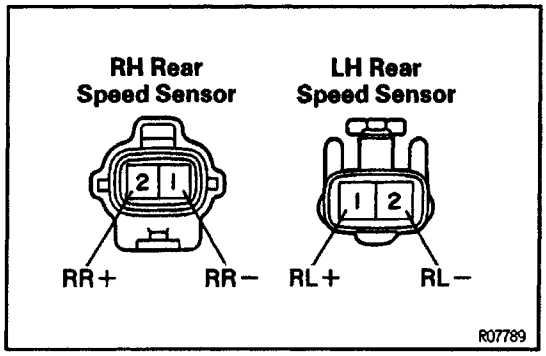

(b) Measure the resistance between terminals.

Resistance:

0.89 – 1.29 kΩ

If resistance value is not as specified, replace the sensor.

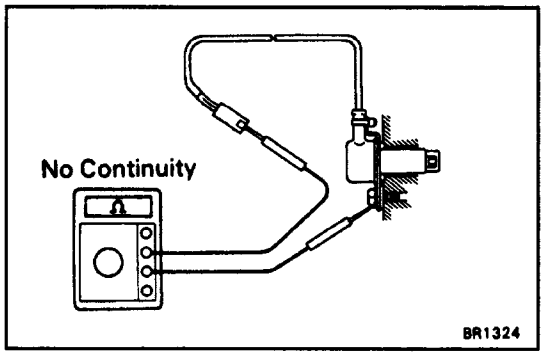

(c) Check that there is no continuity between each terminal and sensor body.

If there is continuity, replace the sensor.

(d) Connect the speed sensor connector.

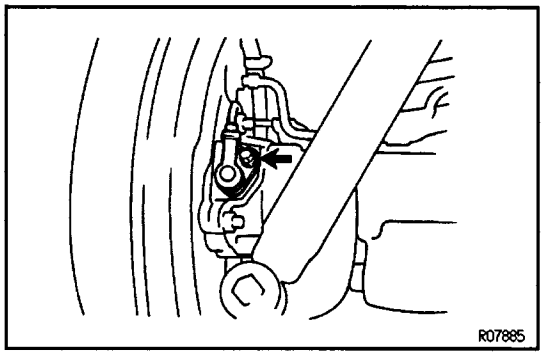

2. INSPECT SENSOR INSTALLATION

Check that the sensor installation bolt is tightened properly. If not, tighten the bolt.

Torque: 7.8 N–m (80 kgf–cm, 69 in.–lbf)

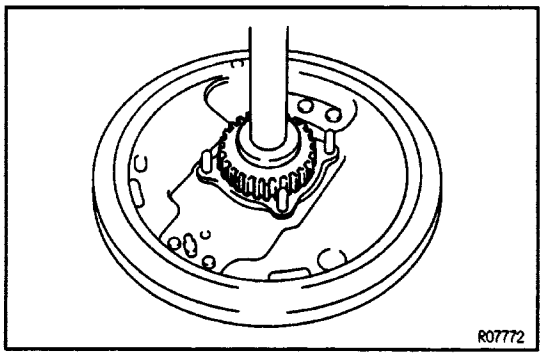

3. VISUALLY INSPECT SENSOR ROTOR SERRATIONS

(a) Remove the rear axle shaft.
(See page SA–128)

(b) Inspect the sensor rotor serrations for scratches, cracks, warping or missing teeth.

(c) Install the rear axle shaft.
(See page SA–132)

NOTICE: To prevent damage to the serrations, do not strike the axle hub.

4. CHECK SPEED SENSOR SIGNAL

(See page BR–86)

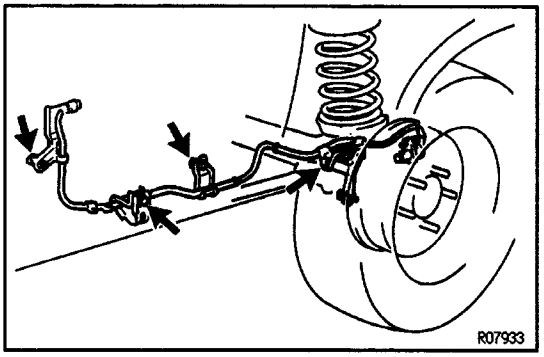

REAR SPEED SENSOR REMOVAL

1. DISCONNECT SPEED SENSOR CONNECTOR

(a) Remove the 4 clamp bolts holding the sensor wire harness from the body, lower control arm and axle carrier.

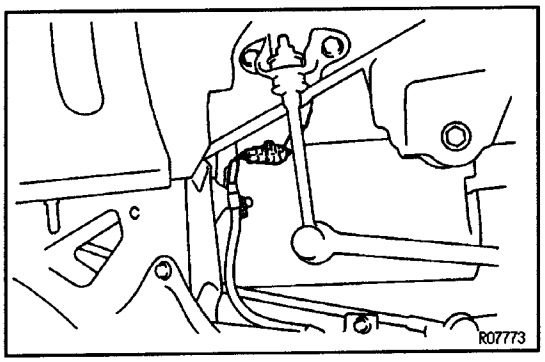

(b) Disconnect the speed sensor connector.

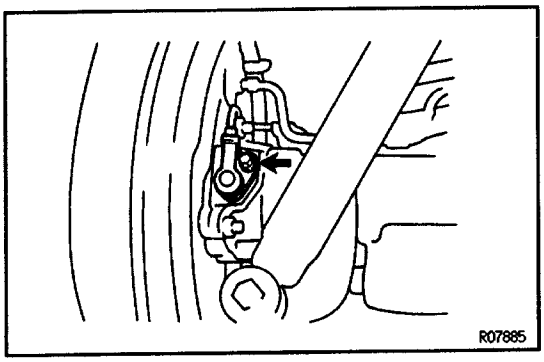

2. REMOVE SPEED SENSOR

Remove the speed sensor from the axle carrier.

REAR SPEED SENSOR INSTALLATION

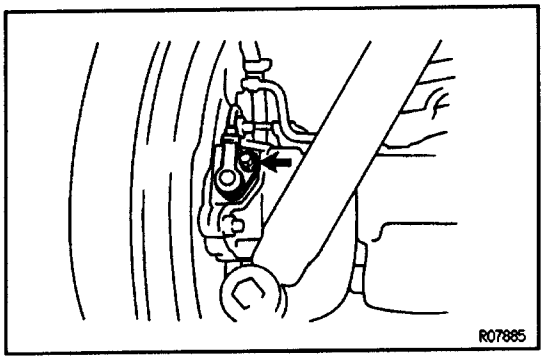

1. INSTALL SPEED SENSOR

Install the speed sensor to the axis carrier.

Torque: 7.8 N–m (80 kgf–cm, 69 in.–lbf)

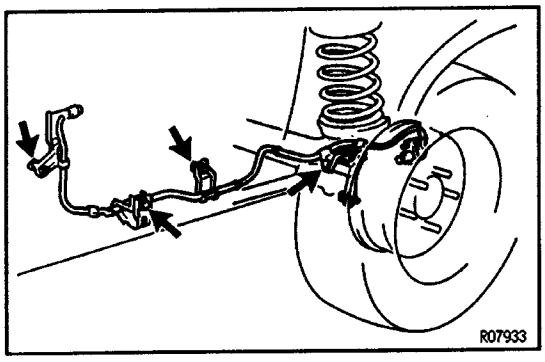

2. INSTALL SPEED SENSOR CONNECTOR

(a) install the speed sensor harness with clamps and bolts.

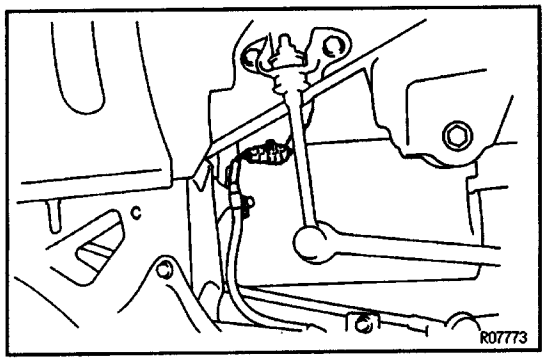

(b) Install the sensor harness with the clamps and bolts in place.

(b) Connect the speed sensor connector.

3. CHECK SPEED SENSOR SIGNAL

(See page BR–86**)**

SPEED SENSOR AND DECELERATION SENSOR DIAGNOSIS SYSTEM

DIAGNOSIS SYSTEM INSPECTION

PRECAUTION

While checking the speed sensor diagnosis system, ABS dose not operate and brake system operates as normal brake system.

1. INSPECT BATTERY POSITIVE VOLTAGE

Inspect that the battery positive voltage is 10 – 14 V.

2. CHECK THAT WARNING LIGHT TURNS ON

(a) Turn the ignition switch ON.

(b) Check that the ”ABS” warning light turns on for 3 seconds.

If not inspect and repair or replace the fuse, bulb and wire harness.

(c) Check that the ”ABS” warning light turns off.

(d) Turn the ignition switch OFF.

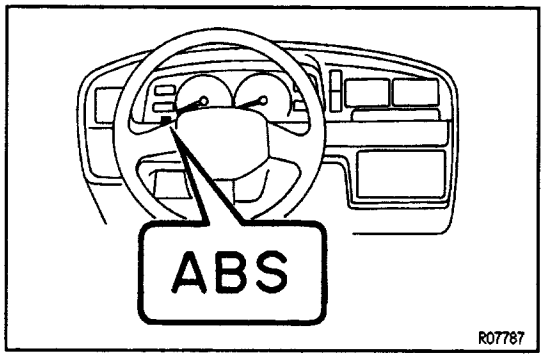

3. DO THE FOLLOWING STEPS

(a) Using SST, connect terminals Ts and E1 of the data link connector 1.

SST 09843–18020

(b) Start the engine.

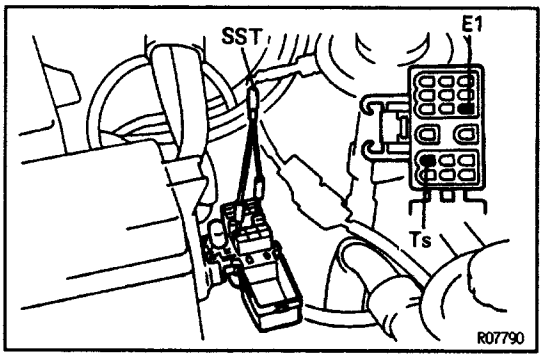

(c) Check that the warning light blinks about 4 times every 1 second.

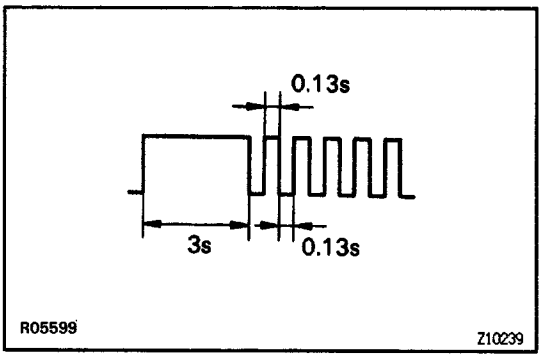

4. INSPECT DECELERATION SENSOR OPERATION

(a) Drive the vehicle straight ahead at about 20 km (12.4 mph) or more, and depress the brake pedal moderate–ly.

(b) Check that the warning light turns on while braking.

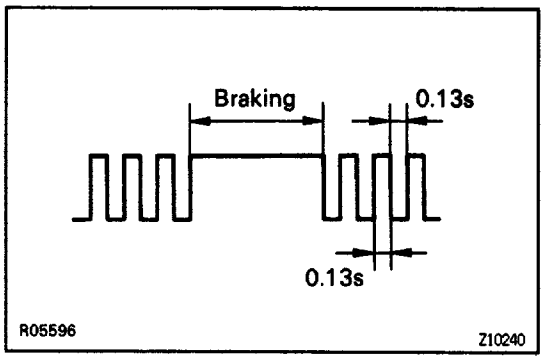

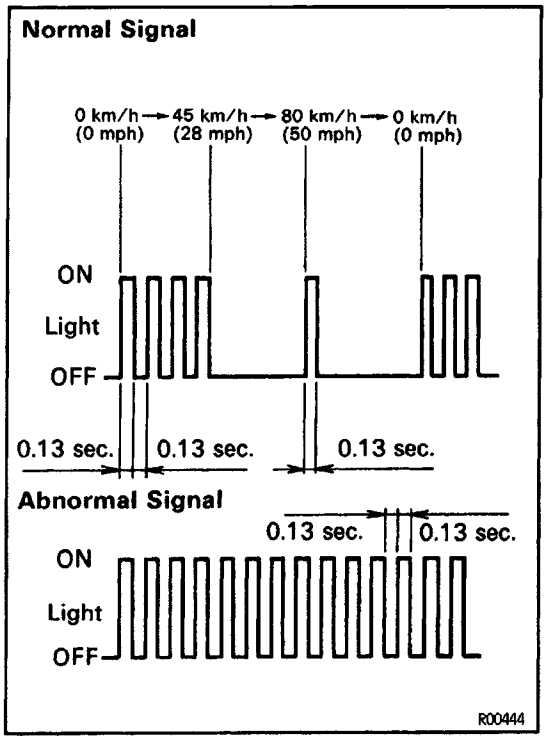

5. INSPECT SPEED SENSOR SIGNAL CHANGE

(a) Drive the vehicle faster than 45 km/h (28 mph) for several seconds.

(b) Check the warning light signal.

If the warning light signal is abnormal, do steps 6 and 7.

HINT:

- If the deceleration sensor operation in step 4 does not occur, an abnormal signal is output.
- The high–speed check is possible at 80 km/h (50 mph) or higher.

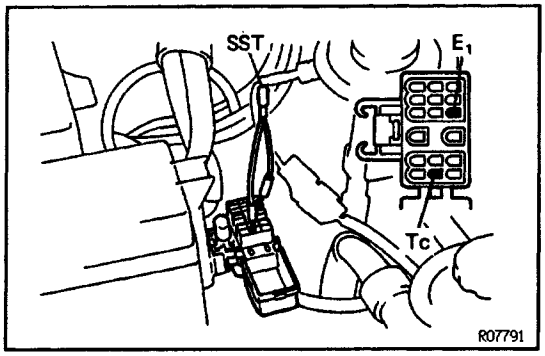

6. READ DIAGNOSTIC TROUBLE CODE

(a) Stop the vehicle, and warning light will being to blink.

(b) Using SST, connect the terminals Tc and E1 of data link connector 1.

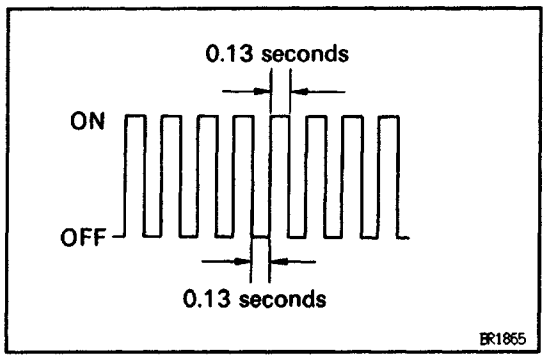

(c) Read the number of blinks of the ABS warning light. (See page BR–89)

HINT: If normal, the warning light blinks about 4 times every 1 second.

If 2 or more malfunctions are indicated at the same time, the smallest numbered code will be displayed 1 st.

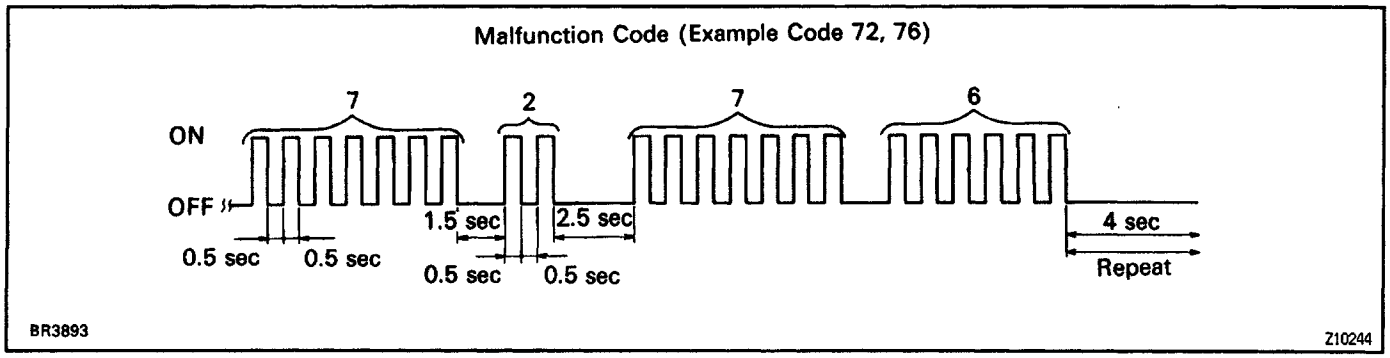

7. REPAIR MALFUNCTIONING PARTS

Repair or replace the malfunctioning parts.

HINT: When repairing or replacing parts, turn the ignition switch OFF.

8. REMOVE SST

Remove the SST from terminals Tc, Ts and E1 of the data link connector 1.

SST 09843–18020

Code No.	Light Pattern	Diagnosis	Malfunctioning Part
	ON OFF 	All speed sensors and sensor rotors are normal	
71		Low voltage of right front speed sensor signal	• Right front speed sensor • Sensor installation
72		Low voltage of left front speed sensor signal	• Left front speed sensor • Sensor installation
73		Low voltage of right rear speed sensor signal	• Right rear speed sensor • Sensor installation
74		Low voltage of left rear speed sensor signal	• Left rear speed sensor • Sensor installation
75		Abnormal change of right front speed sensor signal	• Right front sensor rotor
76		Abnormal change of left front speed sensor signal	• Left front sensor rotor
77		Abnormal change of right rear speed sensor signal	• Right rear sensor rotor
78		Abnormal change of left rear speed sensor signal	• Left rear sensor rotor
79		Deceleration sensor is faulty	• Deceleration sensor • Sensor installation

BRAKE BOOSTER

BRAKE BOOSTER REMOVAL

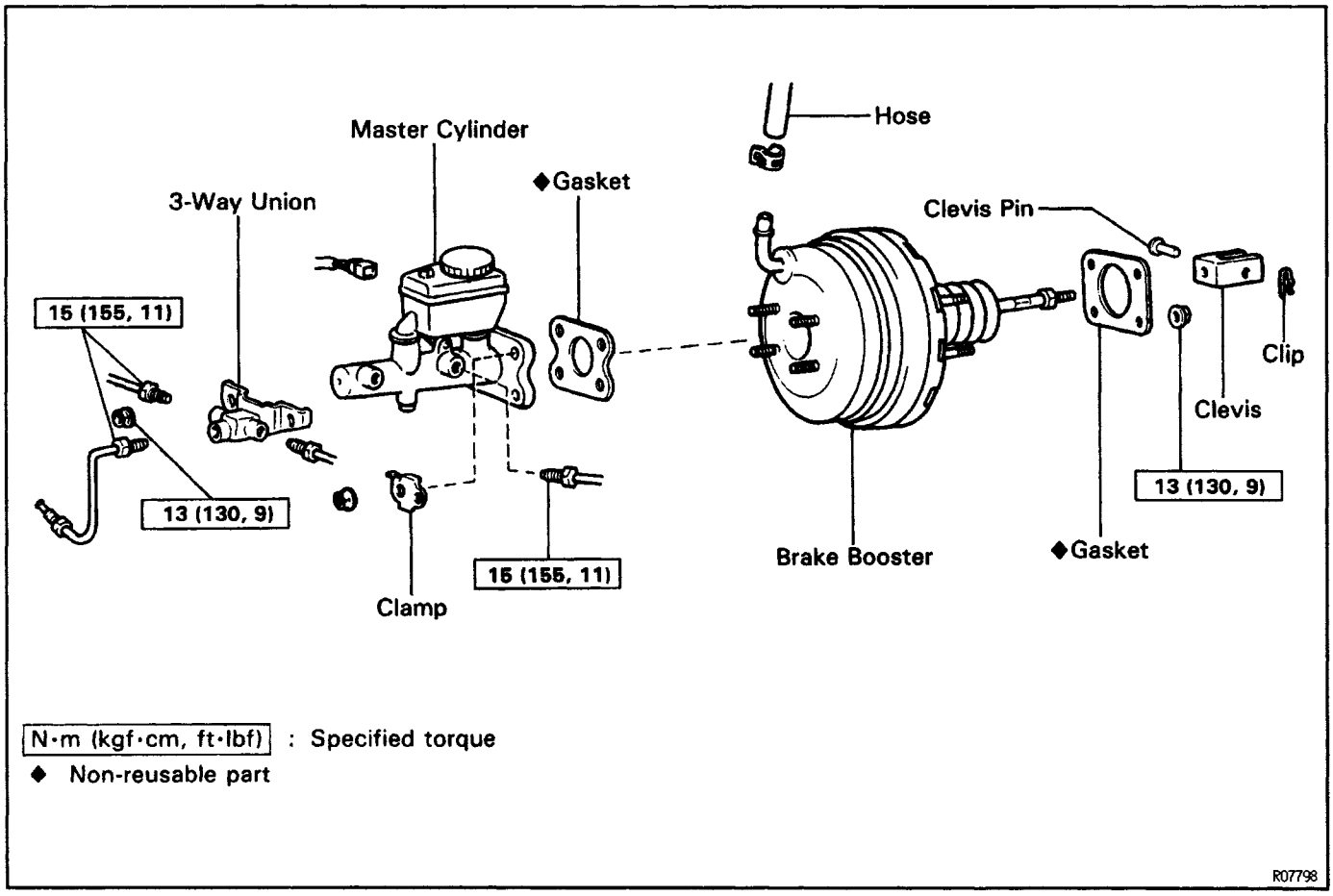

1. REMOVE MASTER CYLINDER
   (See page BR–10)
2. DISCONNECT VACUUM HOSE FROM BRAKE BOOSTER
3. REMOVE PEDAL RETURN SPRING
4. REMOVE CLIP AND CLEVIS PIN

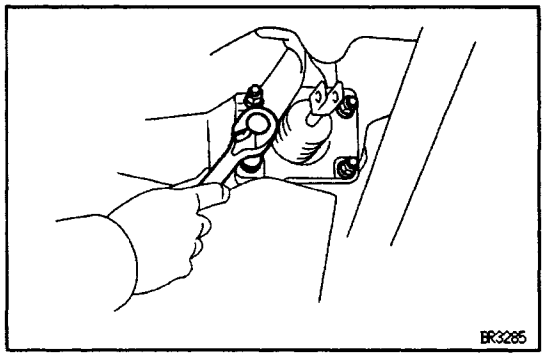

5. REMOVE BRAKE BOOSTER, GASKET AND CLEVIS

BRAKE BOOSTER INSTALLATION

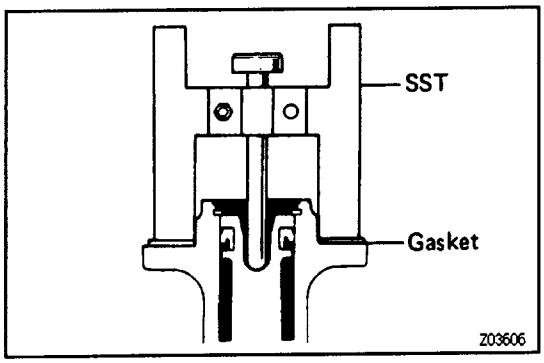

1. ADJUST LENGTH OF BOOSTER PUSH ROD

(a) Install the gasket on the master cylinder.

(b) Set the SST on the gasket, and lower the pin until its tip slightly touches the piston.

SST 09737–00010

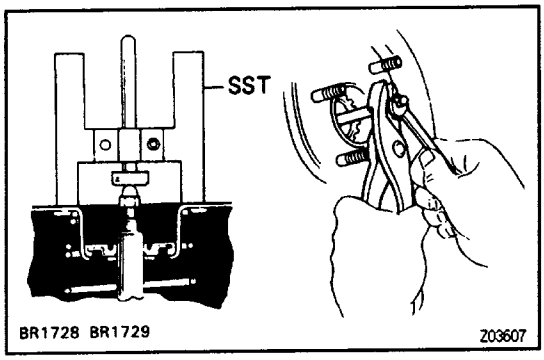

(c) Turn the SST upside down, and set it on the booster.
SST 09737–00010

(d) Measure the clearance between the booster push rod and pin head (SST).

Clearance:

0 mm (0 in.)

(e) Adjust the booster push rod length until the push rod lightly touches the pin head.

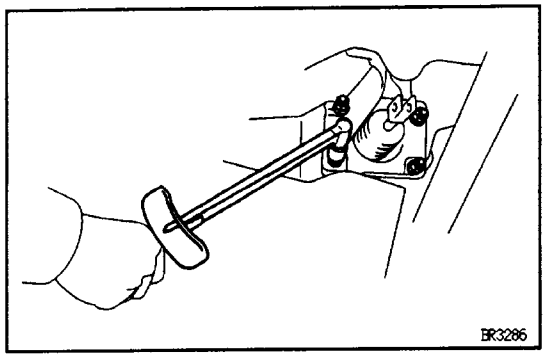

2. INSTALL BRAKE BOOSTER, GASKET AND CLEVIS

(a) Install the booster and gasket.

(b) Install the clevis.

(c) Install and torque the booster mounting nuts.

Torque: 13 N–m (130 kgf–cm, 9 ft–lbf)

3. CONNECT CLEVIS TO BRAKE PEDAL

Insert the clevis pin into the clevis and brake pedal and install the clip to the clevis pin.

4. INSTALL PEDAL RETURN SPRING

5. INSTALL MASTER CYLINDER

(See page BR–15)

6. CONNECT VACUUM HOSE TO BRAKE BOOSTER

7. FILL BRAKE RESERVOIR WITH BRAKE FLUID AND BLEED BRAKE SYSTEM

(See page BR–8)

8. CHECK FOR FLUID LEAKAGE

9. CHECK AND ADJUST BRAKE PEDAL

(See page BR–7)

10. DO OPERATIONAL CHECK

(See page BR–8)

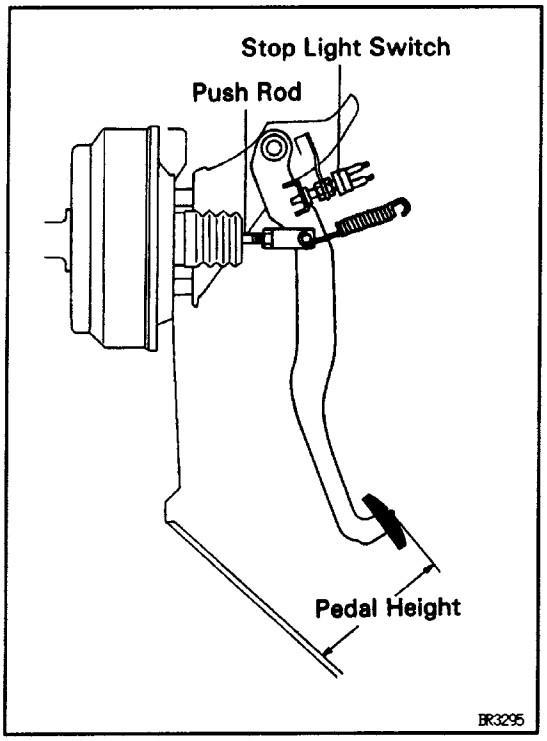

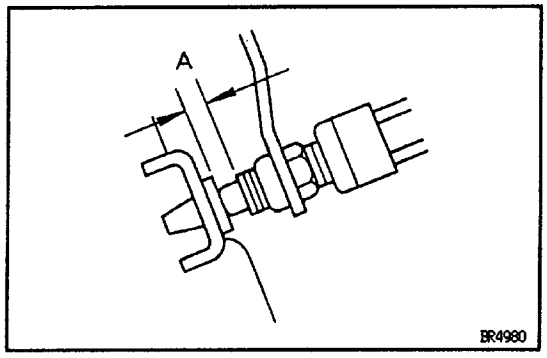

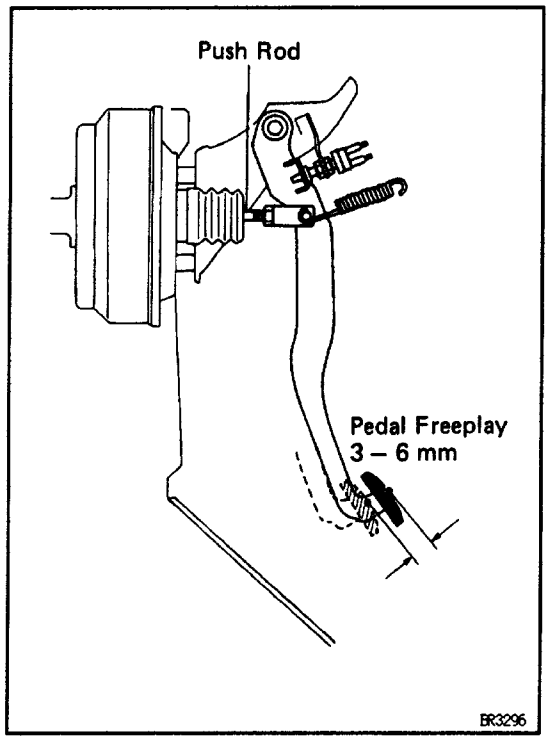

CHECK AND ADJUSTMENT

BRAKE PEDAL CHECK AND ADJUSTMENT

1. CHECK PEDAL HEIGHT

Pedal height from asphalt sheet:

140–150 mm (5.51–5.91 in.)

2. IF NECESSARY, ADJUST PEDAL HEIGHT

(a) Disconnect the connector from the stop light switch.

(b) Loosen the stop light switch lock nut and remove the stop light switch.

(c) Loosen the push rod lock nut.

(d) Adjust the pedal height by turning the pedal push rod.

(e) Tighten the push rod lock nut.

Torque: 25 N–m (260 kgf–cm, 19 ft–lbf)

(f) Install the stop light switch and turn it until it lightly contacts the pedal stopper.

(g) Turn the stop light switch back one turn.

(h) Check the clearance (A) between stop light switch and pedal.

Clearance:

0.5–2.4 mm (0.02–0.09 in.)

(i) Tighten the stop light switch lock nut.

(j) Check the stop lights come on when the brake pedal is depressed, and go off when the brake pedal is released.

(k) After adjusting the pedal height, check the pedal free play.

HINT: If clearance (A) between the stop light switch and the pedal stopper has been adjusted correctly, the pedal freeplay will meet the specifications.

3. CHECK PEDAL FREEPLAY

(a) Stop the engine and depress the brake pedal several times until there is no more vacuum left in the booster.

(b) Push in the pedal by hand until the beginning of the second resistance is felt. Measure the distance, as shown.

Pedal freeplay:

3–6 mm (0.12–0.24 in.)

If incorrect, check the stop light switch clearance. If the clearance is OK, then troubleshoot the brake system.

HINT: The freeplay to the 1 st resistance is due to the play between the clevis and pin. This is magnified up to 1–3 mm (0.04–0.12 in.) at the pedal.

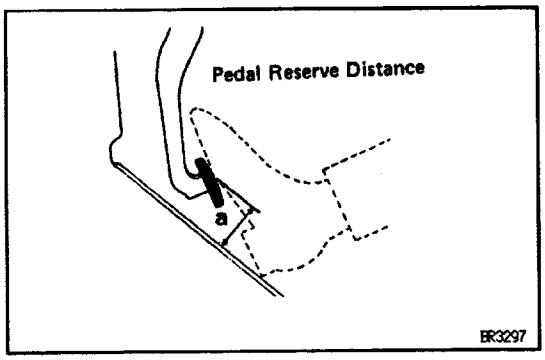

4. CHECK PEDAL RESERVE DISTANCE

Release the parking brake.

With engine running, depress the pedal and measure the pedal reserve distance, as shown.

Pedal reserve distance from asphalt sheet at 490 N (50 kgf, 110.2 lbf):

w/o 4–Wheel ABS: More than 65 mm (2.56 in.)

w/ 4–Wheel ABS: More than 70 mm (2.76 in.)

If incorrect, troubleshoot the brake system.

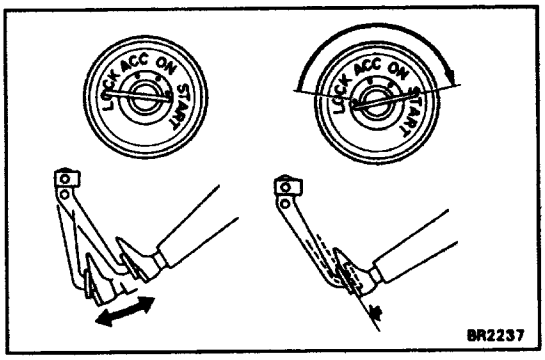

BRAKE BOOSTER OPERATIONAL TEST

1. OPERATING CHECK

(a) Depress the brake pedal several times with the engine oft, and check that there is no change in the pedal reserve distance.

(b) Depress the brake pedal and start engine. If the pedal goes down slightly, operation is normal.

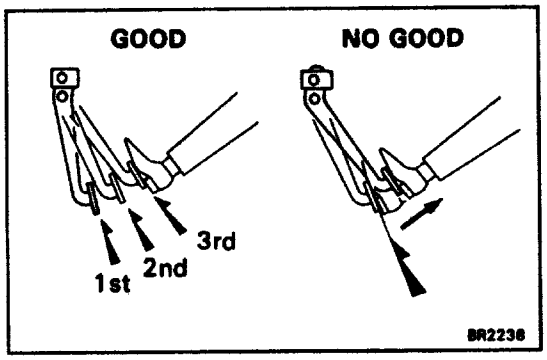

2. AIR TIGHTNESS CHECK

(a) Start the engine and stop it after 1 or 2 minutes. Depress the brake pedal several times slowly. If the pedal goes down furthest the 1 st time, but gradually rises after the 2nd or 3rd time, the booster is air tight.

(b) Depress the brake pedal while the engine is running, and stop it with the pedal depressed. If there is no change in pedal reserve travel after holding the pedal for 30 seconds, the booster is air tight.

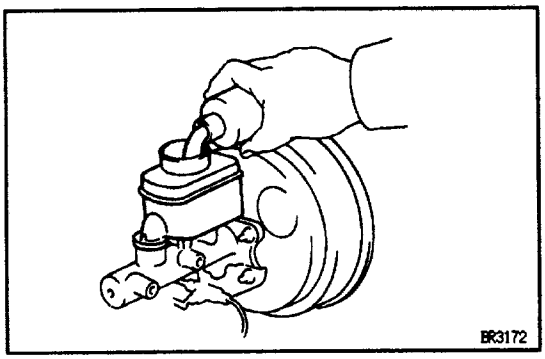

BRAKE SYSTEM BLEEDING

HINT: If any work is done on the brake system or if air is suspected in the brake lines, bleed the system of air

NOTICE: Do not lot broke fluid remain on a painted surface. Wash it off immediately.

1. FILL BRAKE RESERVOIR WITH BRAKE FLUID

Check the fluid level in the reservoir after bleeding each wheel. Add fluid, if necessary.

Fluid: SAE J1703 or FMVSS No. 116 DOT 3

2. BLEED MASTER CYLINDER

HINT: If the master cylinder was disassembled orthe reservoir becomes empty, bleed the air from the master cylinder.

(a) Disconnect the brake lines from the master cylinder.

(b) Slowly depress the brake pedal and hold it.

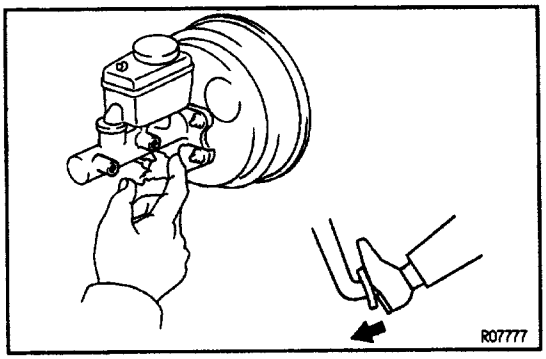

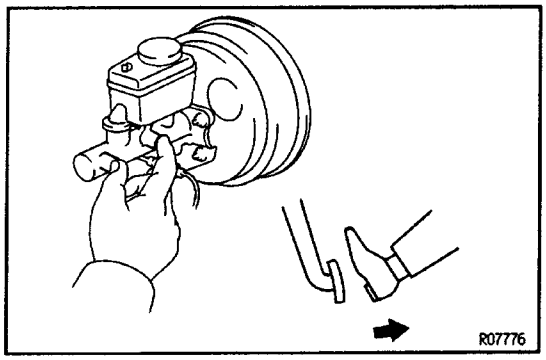

(c) Block oft the outlet plug with your finger, and release the brake pedal.
(d) Repeat (b) and
(c) 3 or 4 times.

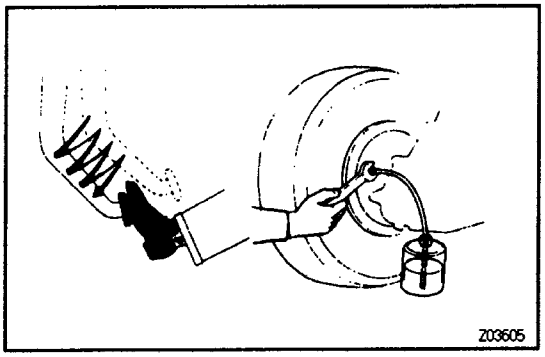

3. CONNECT VINYL TUBE TO WHEEL CYLINDER BLE–EDER PLUG

Insert other end of the tube in a half–full container of brake fluid.

HINT: Begin air bleeding from the wheel cylinder with the longest hydraulic line.

4. BLEED BRAKE LINE

(a) Slowly depress the brake pedal several times.
(b) While an assistant depresses the pedal, loosen the bleeder plug until fluid starts to run out. Then close the bleeder plug.
(c) Repeat this procedure until there are no more air bubbles in the fluid.

Bleeder plug tightening torque:
11 N–m (110 kgf–cm, 8 ft–lbf)

5. REPEAT PROCEDURE FOR EACH WHEEL

6. BLEED LSP & BV

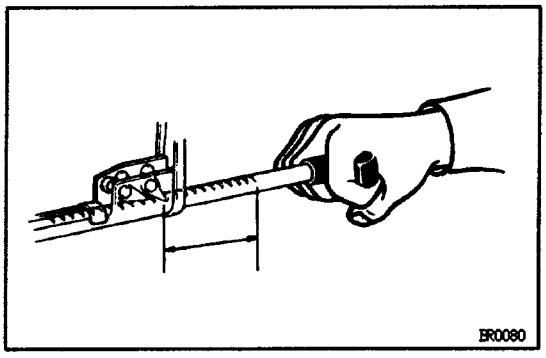

PARKING BRAKE CHECK AND ADJUSTMENT

1. CHECK PARKING BRAKE LEVER TRAVEL

Pull the parking brake level all the way up, and count the number of clicks.

Parking broke lover travel at 196 N (20 kgf, 44.1 lbf):
13–19 clicks

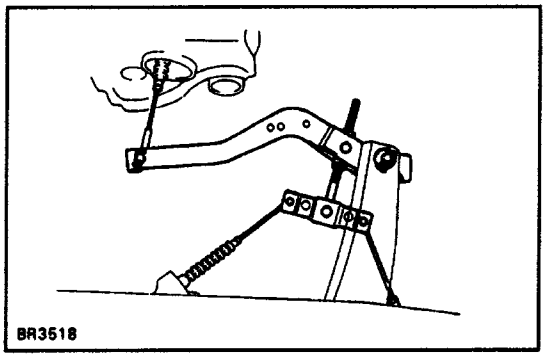

2. IF NECESSARY, ADJUST PARKING BRAKE

HINT: Before adjusting the parking brake, make sure that the rear brake shoe clearance has been adjusted.

(a) Loosen the lock nut and turn the adjusting nut until the travel is correct.
(b) Then tighten the lock nut.

Torque: 13 N–m (130 kgf–cm, 9 ft–lbf)

(c) After adjusting the parking brake, confirm that the rear brakes are not dragging.

GENERAL DESCRIPTION

1. Care must be taken to replace each part properly a: it could affect the performance of the brake system and result in a driving hazard. Replace the parts with parts of the same part number or equivalent.
2. It is very important to keep parts and the area clean when repairing the brake system.
3. If the vehicle is equipped with a mobile communication system, refer to the precaution in the IN section.

DESCRIPTION

The service brakes consist of a foot brake which changes rotational energy to thermal energy to stop the vehicle while it is being driven and a parking brake to keep the vehicle from moving while it is parked.

OPERATION

FOOT BRAKE

When the brake pedal is depressed, a vacuum builds up in the booster which amplifies the pedal force, pressing on the piston in the master cylinder. The piston movement raises the hydraulic pressure in the cylinder. This hydraulic pressure is then applied to each respective brake cylinder and wheel cylinder, and acts to press the brake pads and shoes against the rotating discs and drums. The resulting friction converts the rotational energy to thermal energy, stopping the vehicle.

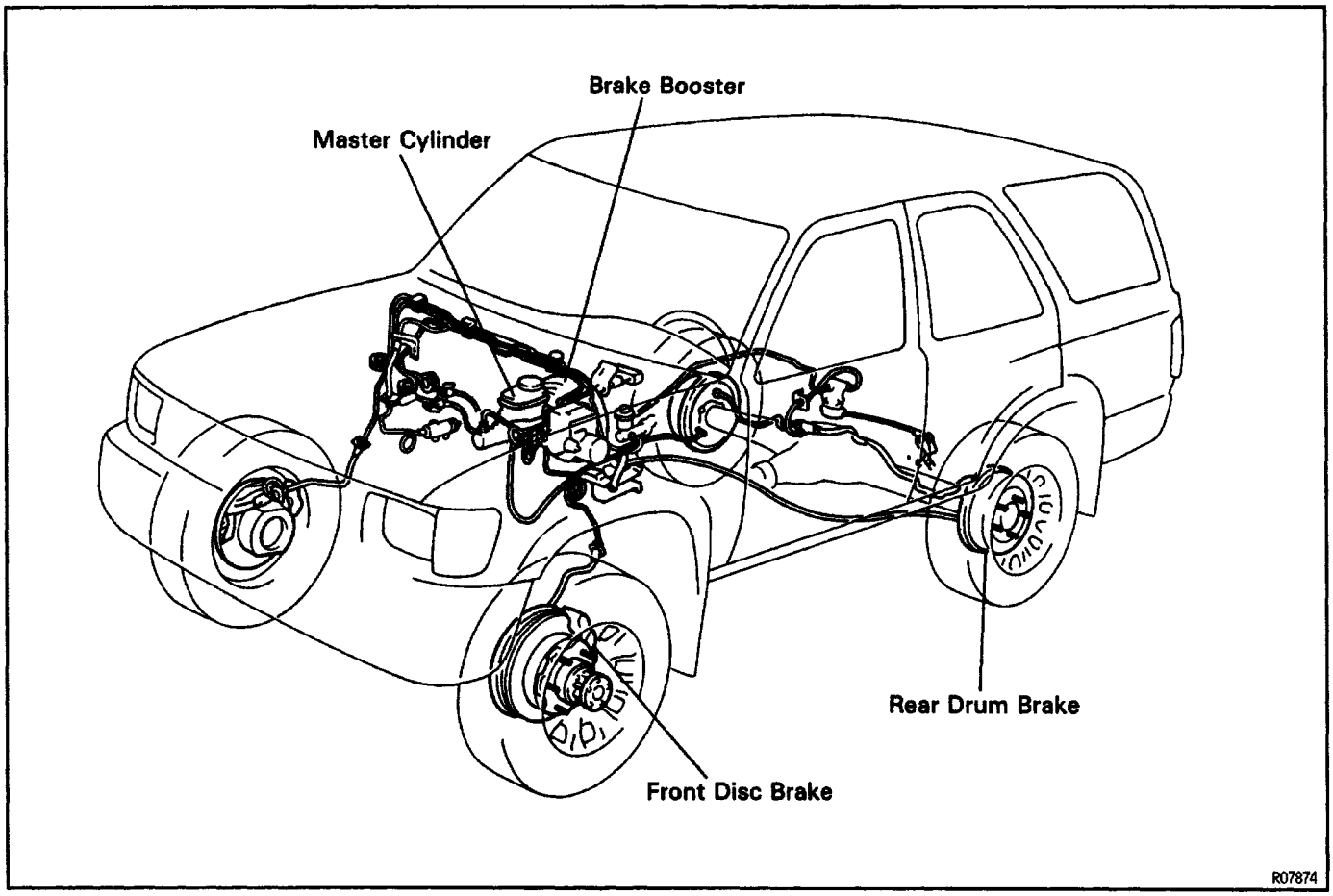

FRONT BRAKE

COMPONENTS

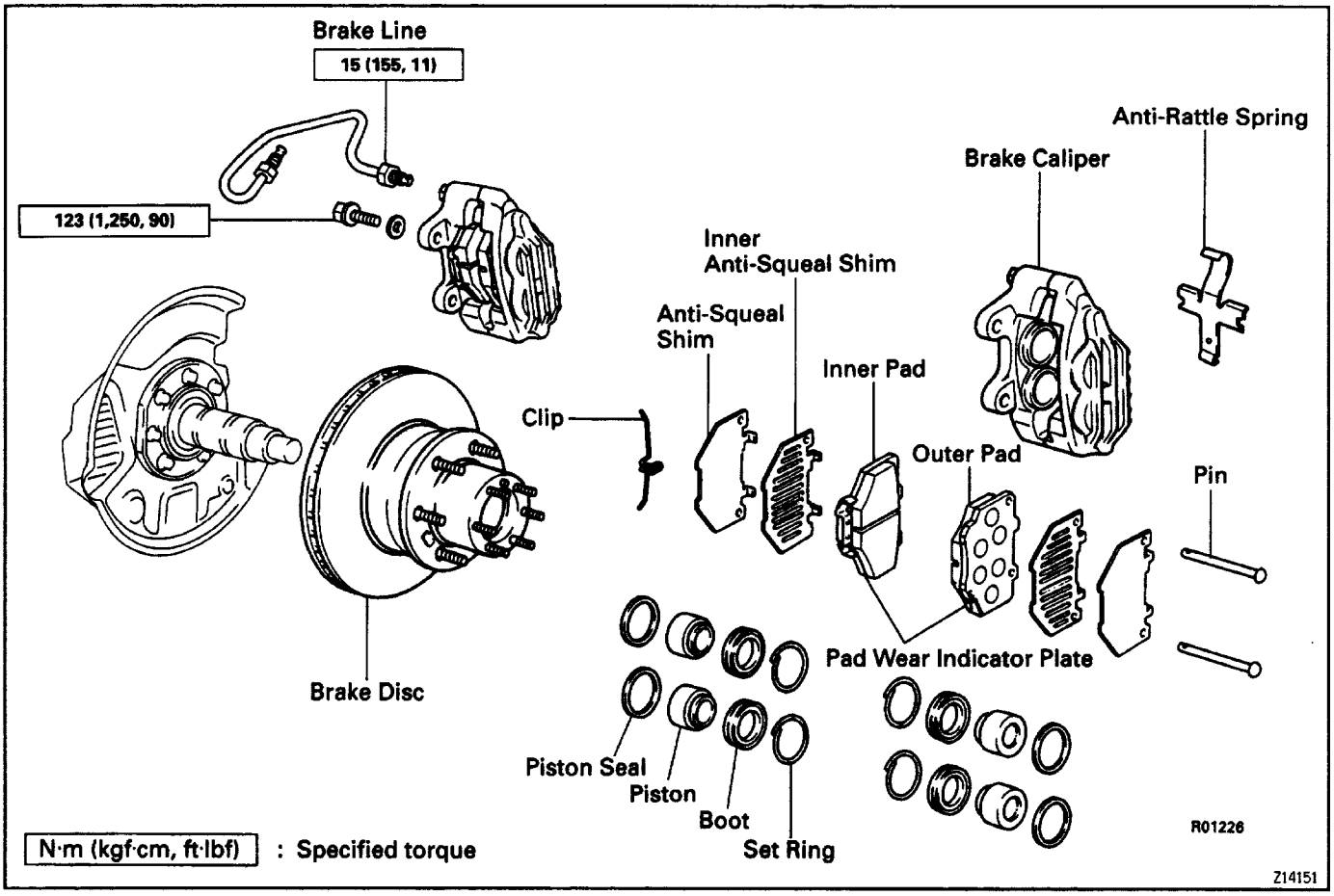

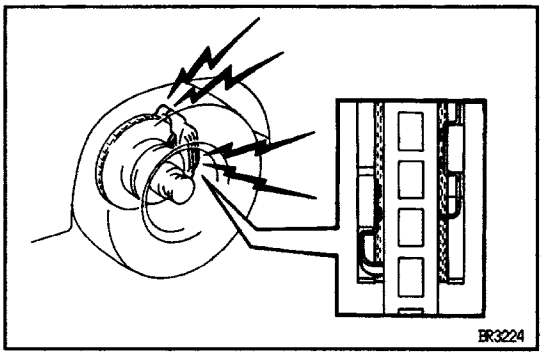

BRAKE PADS REPLACEMENT

HINT: If a squealing noise occurs from the brakes while driving, check the pad wear indicator plate. If the pad wear indicator plate contacts the disc, the brake pads should be replaced.

1. REMOVE FRONT WHEEL

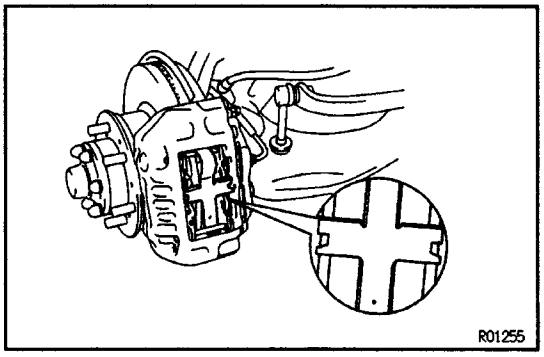

2. INSPECT PAD LINING THICKNESS

Check the pad thickness and replace pads if not within specification.

Minimum thickness:

1.0 mm (0.039 in.)

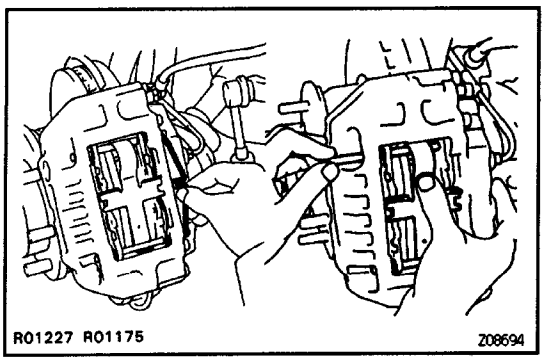

3. REMOVE THESE PARTS:

(a) Clip
(b) 2 pins
(c) Anti–rattle spring
(d) 2 pads
(e) 4 anti–squeal shims

NOTICE: The anti–rattle springs and clips can be used again provided that they have sufficient rebound, no deformation, cracks or wear, and have had all rust, dirt and foreign particles cleaned off.

4. CHECK DISC THICKNESS AND RUNOUT

(See page BR–22)

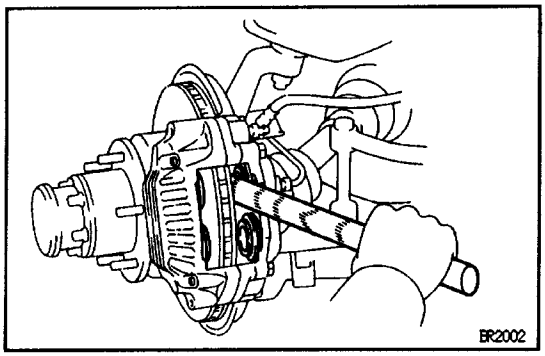

6. INSTALL NEW PADS

NOTICE: When replacing worn pads, the anti–squeal shims must be replaced together with the pads.

(a) Draw out a small amount of brake fluid from the reservoir.
(b) Press in the pistons with a hammer handle or equivalent.

HINT:

- Always change the pads on one wheel at a time as there is a possibility of the opposite piston flying out.
- If the piston is difficult to push in, loosen the bleeder plug and push in the piston while letting some brake fluid escape.

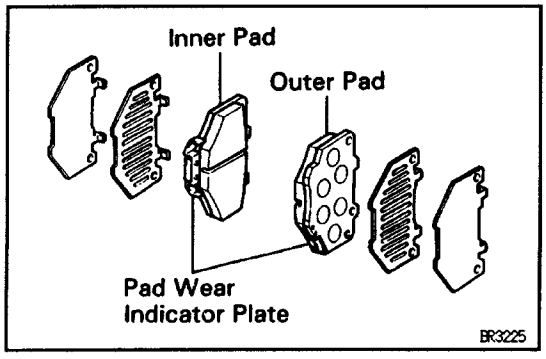

(c) Install the 4 anti – squeal shims to new pads, as shown.

HINT: Apply disc brake grease to both side of the inner anti–squeal shim.

(d) Install the 2 pads.

NOTICE: Do not allow oil or grease to got on the rubbing face.

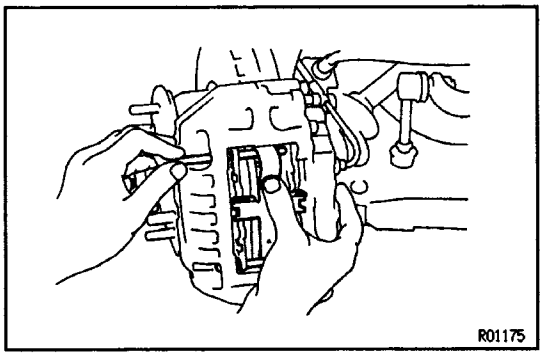

6. INSTALL ANTI–RATTLE SPRING AND 2 PINS

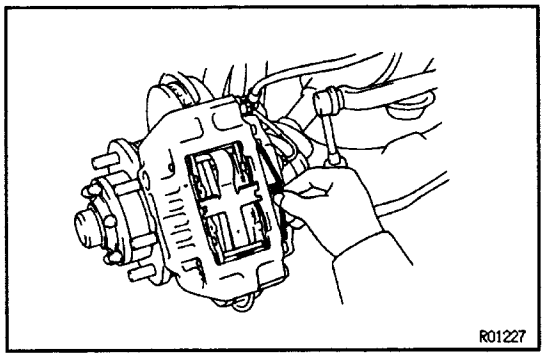

7. INSTALL CLIP

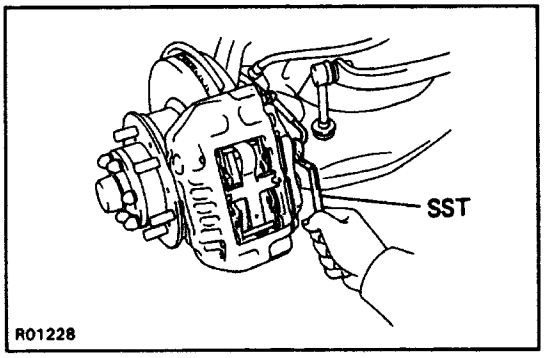

CALIPER REMOVAL

1. REMOVE FRONT WHEEL

2. DISCONNECT BRAKE LINE

Using SST, disconnect the brake line.
Use a container to catch the brake fluid.
SST 09751–36011

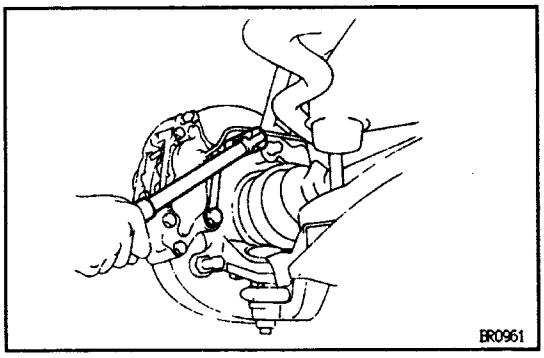

3. REMOVE CALIPER

Remove the 2 mounting bolts and caliper.

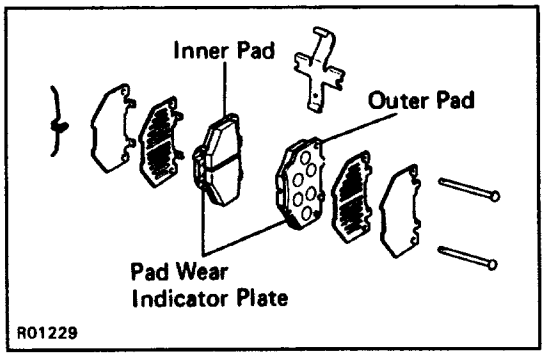

4. REMOVE THESE PARTS:

(a) Clip
(b) 2 pins
(c) Anti–rattle spring
(d) 2 pads
(e) 4 anti–squeal shims

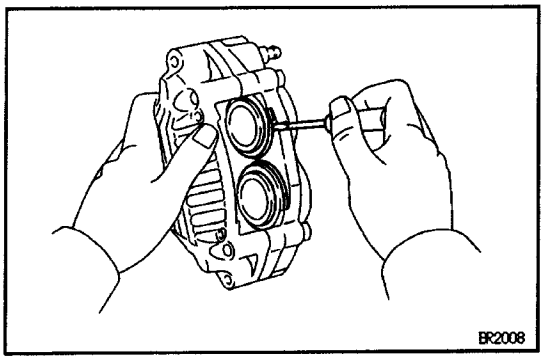

CALIPER DISASSEMBLY

1. REMOVE CYLINDER BOOT SET RINGS AND BOOTS

Using a screwdriver, remove the 4 cylinder boot set rings and 4 boots.

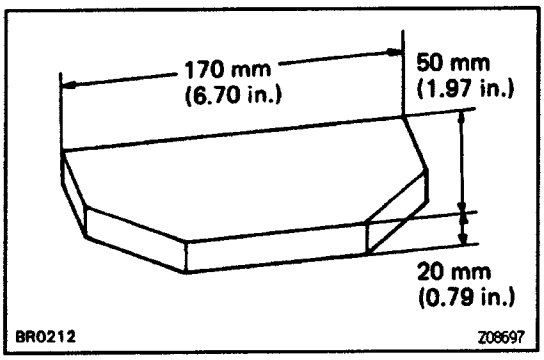

2. REMOVE PISTONS

(a) Prepare the wooden plate to hold the pistons.

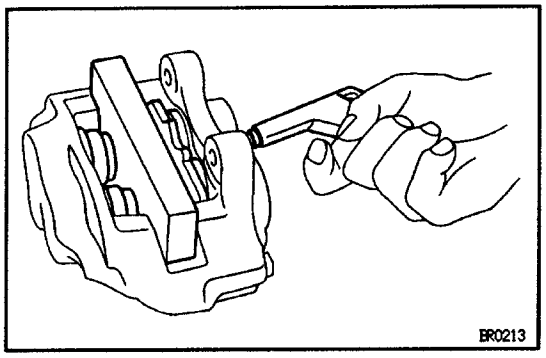

(b) Place the plate between the pistons and insert a pad at one side.

(c) Use compressed air to remove the pistons alternately from the cylinder.

CAUTION: Do not place your fingers in front of the pistons when using compressed air.

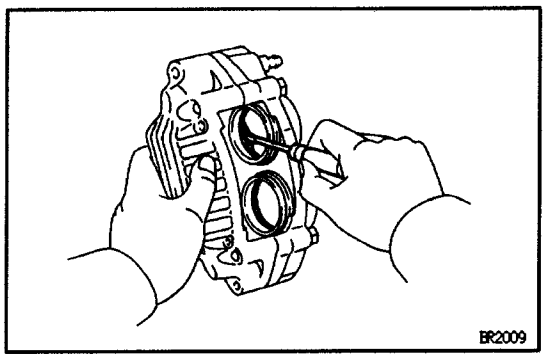

3. REMOVE PISTON SEALS

Using a screwdriver, remove the 4 seals from the cylinder.

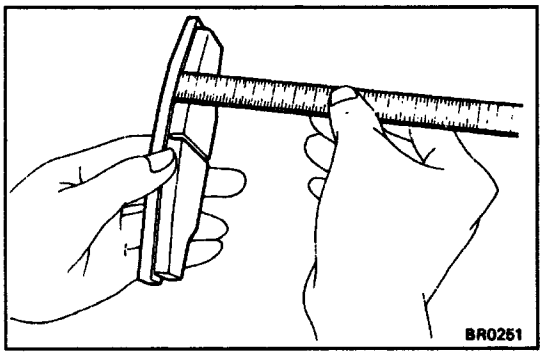

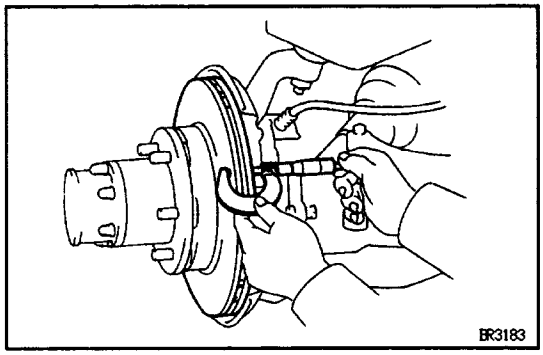

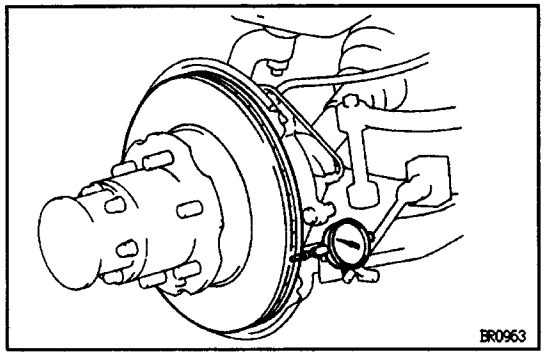

FRONT BRAKE COMPONENTS INSPECTION AND REPAIR

1. MEASURE PAD LINING THICKNESS

Using a ruler, measure the pad lining thickness.

Standard thickness:

9.5 mm (0.374 in.) kgf–cm.

Minimum thickness:

1.5 mm (0.059 in.)

Replace the pads if the thickness is less than the minimum (the 1.5 mm slit is no longer visible) or if it shows signs of uneven wear.

2. MEASURE DISC THICKNESS

Using a micrometer, measure the disc thickness.

Standard thickness:

25.0 mm (0.984 in.)

Minimum thickness:

23.0 mm (0.906 in.)

If the disc is scored or worn, or if thickness is less than minimum, repair or replace the disc.

3. MEASURE DISC RUNOUT

Using a dial indicator, measure the disc runout at a position 10 mm (0.39 in.) from the outer edge.

Maximum disc runout:

0.09 mm (0.0035 in.)

If the runout is greater than maximum, replace the disc.

HINT: Before measuring the runout, confirm that the front bearing play is within specification.

4. IF NECESSARY, REPLACE DISC

(a) Remove the front axle hub.
(See page SA–13)

(b) Remove the disc from the axle hub.

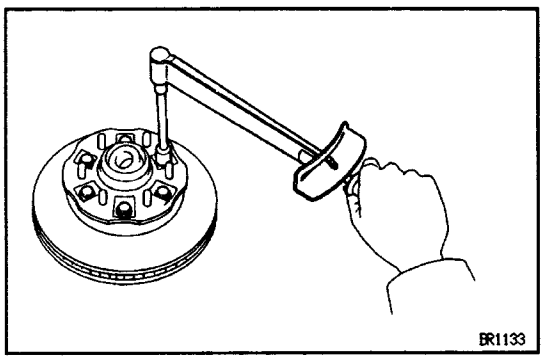

(c) Install a new disc and torque the bolts.

Torque: 64 N–m (650 kgf–cm, 47 ft–lbf)

(d) Install the axle hub and adjust the front bearing preload.
(See page SA–16)

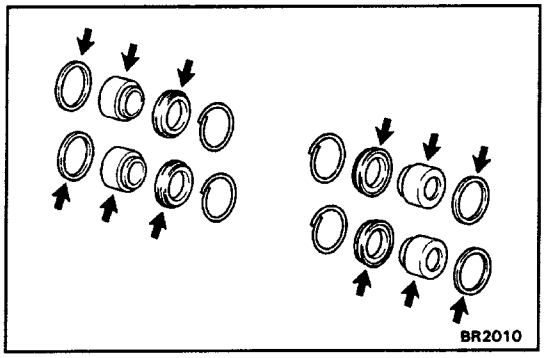

CALIPER ASSEMBLY

1. APPLY LITHIUM SOAP BASE GLYCOL GREASE TO PARTS INDICATED BY ARROWS

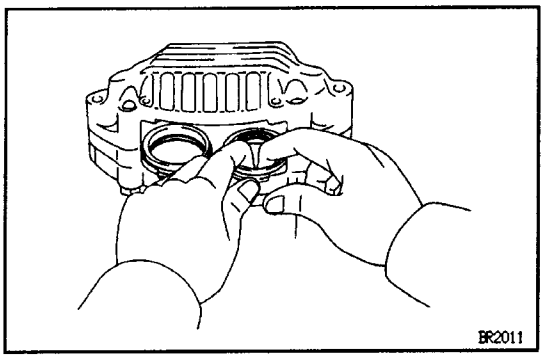

2. INSTALL PISTON SEALS INTO CYLINDER

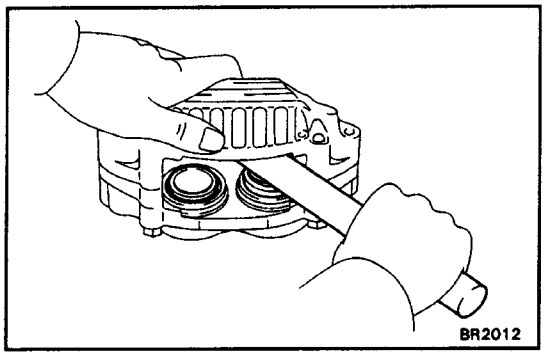

3. INSTALL PISTONS INTO CYLINDER

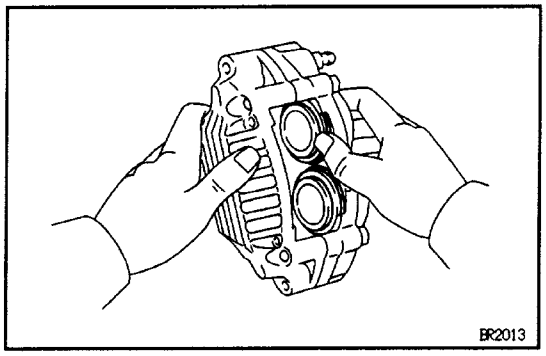

4. INSTALL CYLINDER BOOTS AND SET RINGS INTO CYLINDER

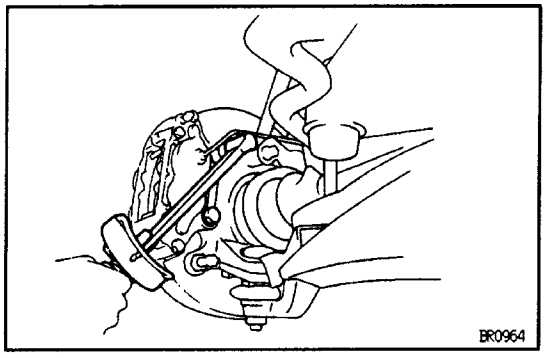

CALIPER INSTALLATION

1. INSTALL CALIPER

Install the brake caliper, and torque the 2 mounting bolts.

Torque: 123 N–m (1,250 kgf–cm, 90 ft–lbf)

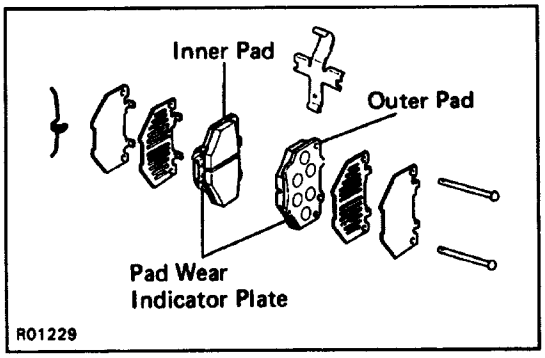

2. INSTALL PADS

(See steps 5 to 8 on page BR–19)

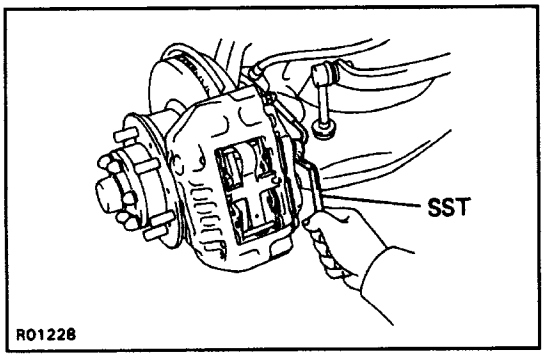

3. CONNECT BRAKE LINE

Using SST, connect the brake line.

SST 09751 – 36011

Torque: 15 N–m (155 kgf–cm, 11 ft–lbf)

4. FILL BRAKE RESERVOIR WITH BRAKE FLUID AND BLEED BRAKE SYSTEM

(See page BR–8)

5. CHECK FOR FLUID LEAKAGE

6. INSTALL FRONT WHEEL

BRAKE SYSTEM

GENERAL DESCRIPTION

1. Care must be taken to replace each part properly a: it could affect the performance of the brake system and result in a driving hazard. Replace the parts with parts of the same part number or equivalent.
2. It is very important to keep parts and the area clean when repairing the brake system.
3. If the vehicle is equipped with a mobile communication system, refer to the precaution in the IN section.

DESCRIPTION

The service brakes consist of a foot brake which changes rotational energy to thermal energy to stop the vehicle while it is being driven and a parking brake to keep the vehicle from moving while it is parked.

OPERATION

FOOT BRAKE

When the brake pedal is depressed, a vacuum builds up in the booster which amplifies the pedal force, pressing on the piston in the master cylinder. The piston movement raises the hydraulic pressure in the cylinder. This hydraulic pressure is then applied to each respective brake cylinder and wheel cylinder, and acts to press the brake pads and shoes against the rotating discs and drums. The resulting friction converts the rotational energy to thermal energy, stopping the vehicle.

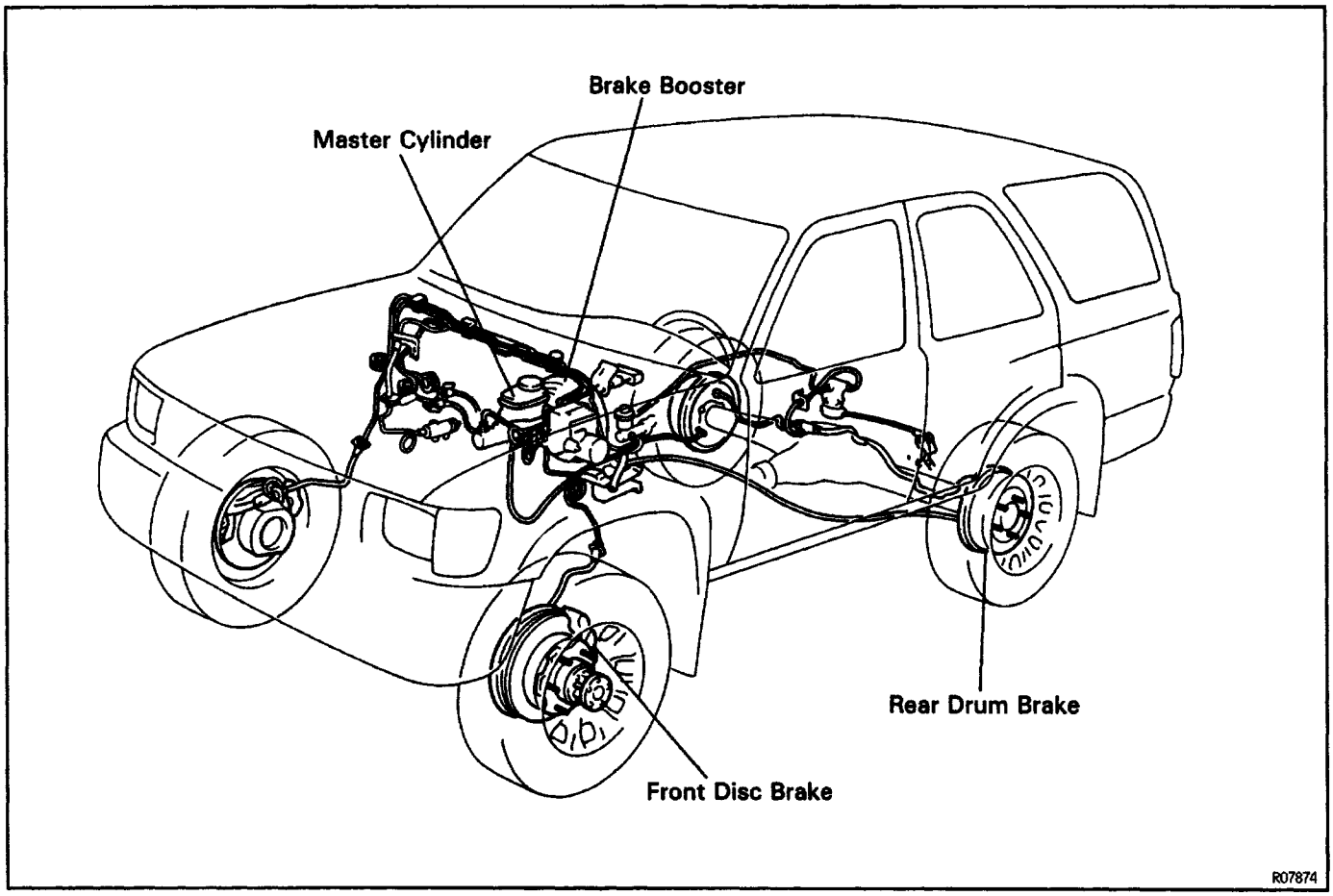

LOAD SENSING PROPORTIONING AND BY–PASS VALVE (LSP & BV)

COMPONENTS

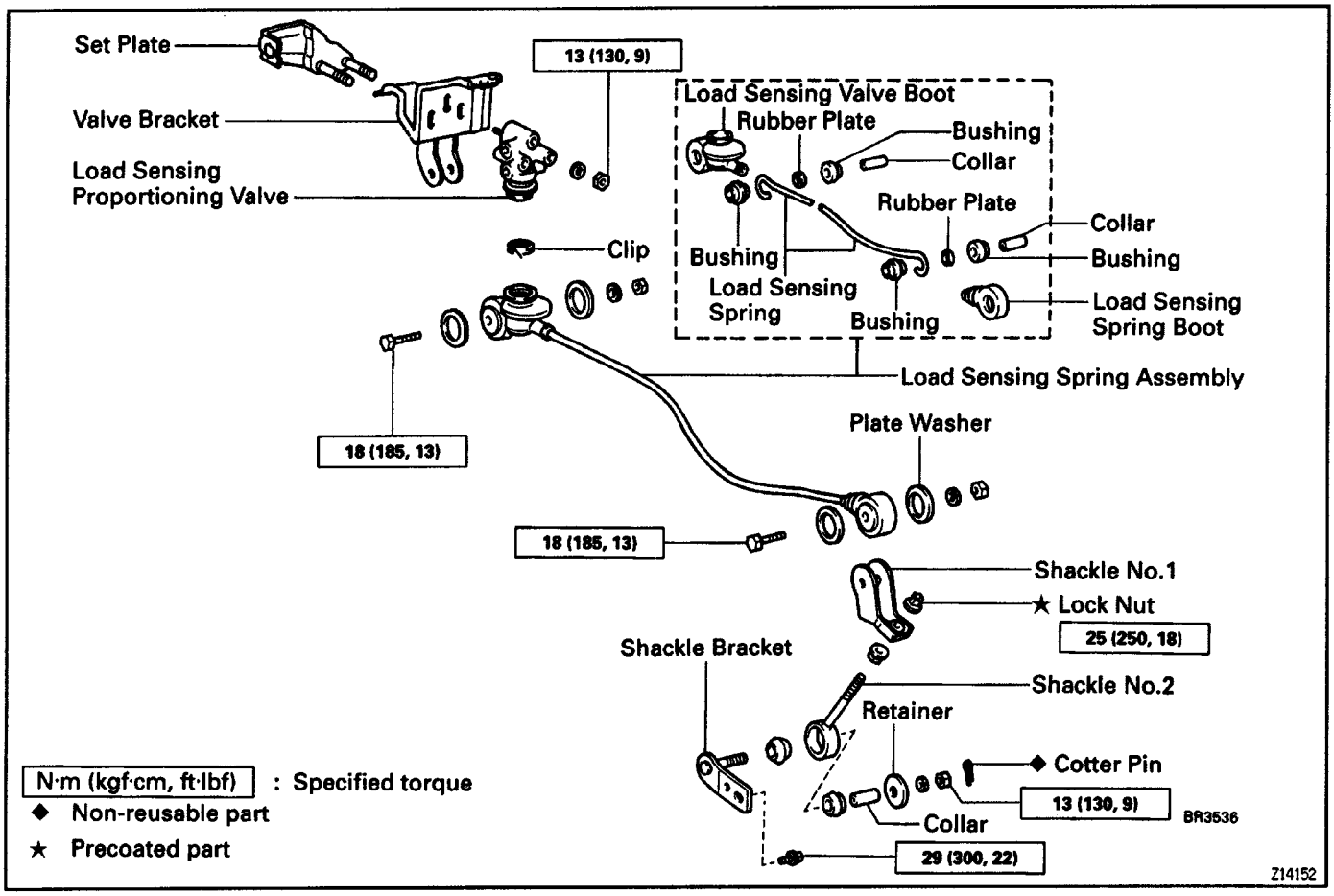

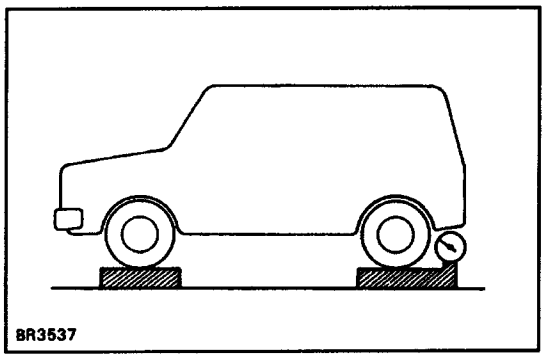

FLUID PRESSURE INSPECTION

1. SET REAR AXLE LOAD

Rear axle load (includes vehicle weight):

1,050 kg (2,310 lb)

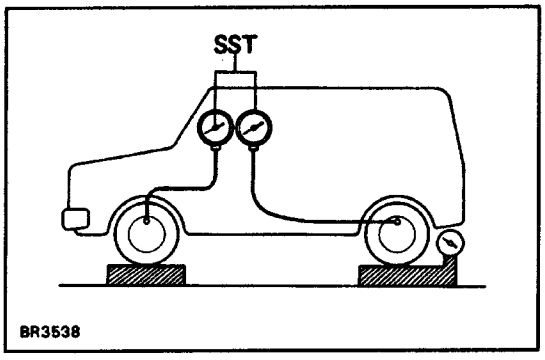

2. INSTALL LSPV GAUGE (SST) AND BLEED AIR

SST 09709–29017

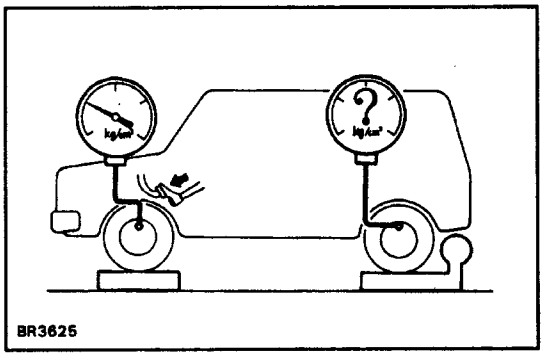

3. RAISE FRONT BRAKE PRESSURE TO 7,845 kPa (80 kgf/cm^2, 1,138 psi) AND CHECK REAR BRAKE PRESSURE

Rear brake pressure:

4,727 – 5,707 kPa

(48.2–58.2 kgf/cm^2, 688–828 psi)

HINT: The brake pedal should not be depressed twice and/or returned while setting to the specified pressure. Read the value of rear brake pressure 2 seconds after adjusting the specified fluid pressure.

If the brake pressure is incorrect, adjust the fluid pressure.

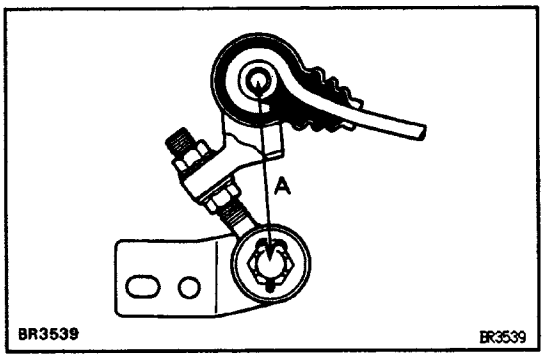

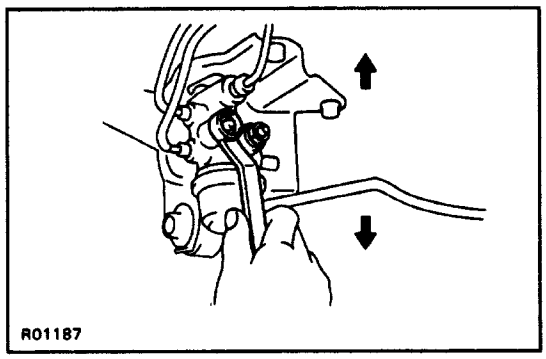

4. IF NECESSARY, ADJUST FLUID PRESSURE

(a) Adjust the length of the No.2 shackle.

Low pressure: Lengthen A

High pressure: Shorten A

Initial set:

78 mm (3.07 in.)

Adjustment range:

68–88 mm (2.68–3.46 in.)

HINT: One turn of the nut changes the fluid pressure about 137 kPa (1.4 kgf/cm^2, 20 psi).

(b) In event the pressure cannot be adjusted by the shackle, raise or lower the valve body.

Low pressure –Lower body

High pressure–Raise body

(c) Torque the nuts.

Torque: 13 N–m (130 kgf–cm, 9 ft–lbf)

(d) Adjust the length of the No.2 shackle again.

If it cannot be adjusted, inspect the valve housing.

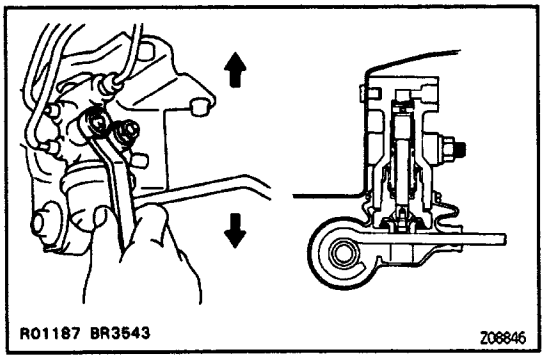

5. IF NECESSARY, CHECK VALVE BODY

(a) Assemble the valve body in the uppermost position.

HINT: When the brakes are applied, the piston will move down about 1 mm (0.04 in.). Even at this time, the piston should not make contact with or move the load sensing spring.

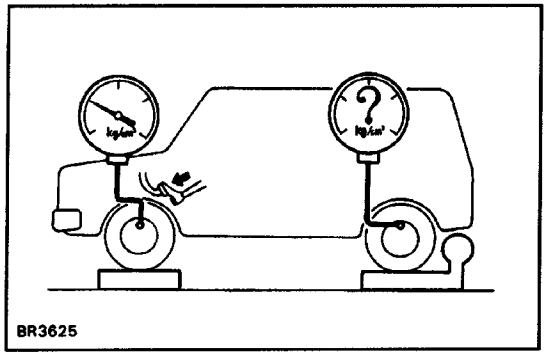

(b) In this position, check the rear brake pressure.

Front brake pressure kPa (kgf/cm^2, psi)	Rear brake pressure kPa (kgf/cm^2, psi)
1,961 (20, 284)	1,961 (20, 284)
3,923 (40, 567)	2,157 – 2,157 (22 – 26, 313 – 370)
6,865 (70, 996)	2,599 – 3,285 (26.5 – 33.5, 377 – 476)

If the measured value is not within standard, replace the valve body.

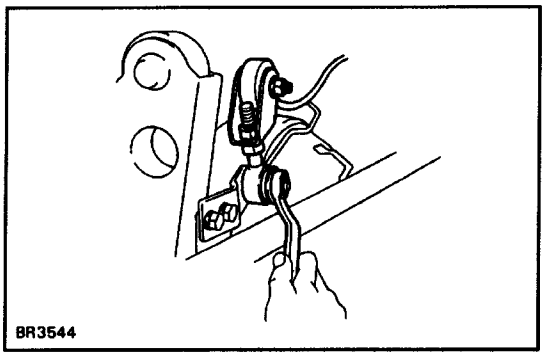

LSP & BV REMOVAL

1. DISCONNECT SHACKLE NO.2 FROM BRACKET

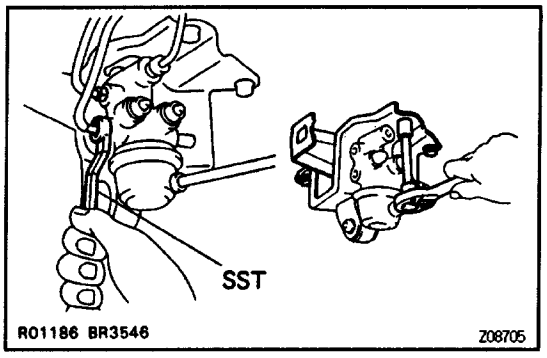

2. REMOVE LSP & BV ASSEMBLY

(a) Using SST, disconnect the brake lines from the valve body.
SST 09751–36011

(b) Remove the valve bracket mounting bolts and remove the LSP & BV assembly.

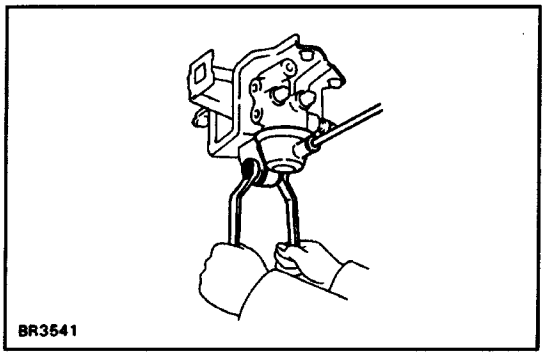

LSP & BV LSPV DISASSEMBLY

1. REMOVE VALVE BRACKET

(a) Remove the nut and bolt.

(b) Remove the 2 nuts, and remove the bracket and set plate from the valve body.

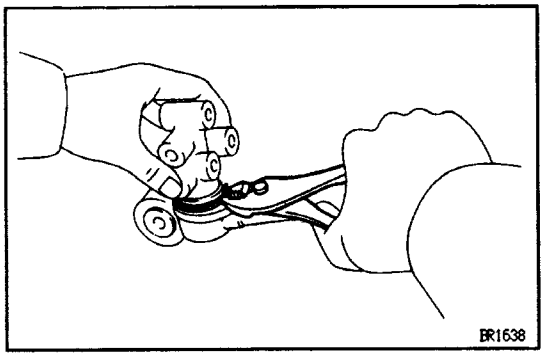

2. DISCONNECT SPRING FROM VALVE

Using a pliers, remove the clip, and remove the spring from the valve.

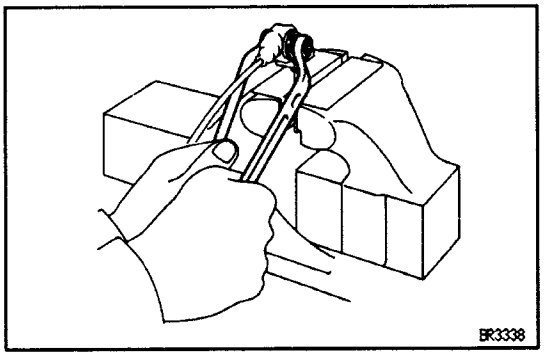

3. REMOVE SHACKLES No.1 AND No.2

Remove the nuts and bolts, and then remove the No. 1 and No.2 shackle, and 2 plate washers from the load sensing spring assembly.

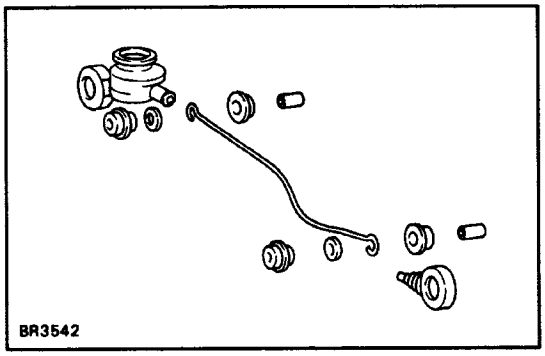

4. DISASSEMBLE LOAD SENSING SPRING

Disassemble the these parts:
(a) Bushings
(b) Collars
(c) Rubber plates
(d) Load sensing valve boot
(e) Load sensing spring boot

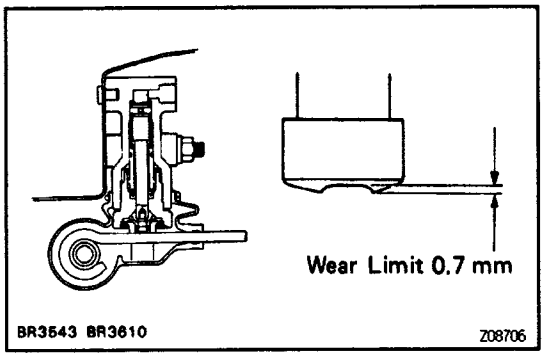

LSP & BV LSPV INSPECTION

INSPECT VALVE PISTON PIN AND LOAD SENSING CONTACT SURFACE FOR WEAR

Wear limit:

0.7 mm (0.028 in.)

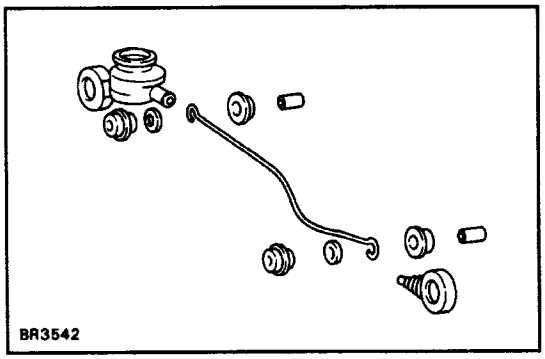

LSP & BV ASSEMBLY

1. ASSEMBLE THESE PARTS TO LOAD SENSING SPRING:

(a) Load sensing valve boot
(b) Load sensing spring boot
(c) Bushings
(d) Rubber plates
(e) Collars

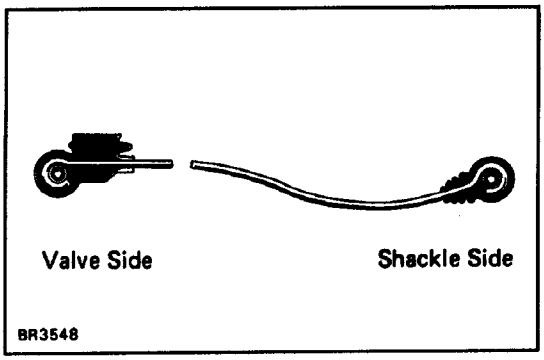

HINT: Apply lithium soap–base glycol grease to all rubbing areas.
Do not mistake the valve side for the shackle side of the load sensing spring.

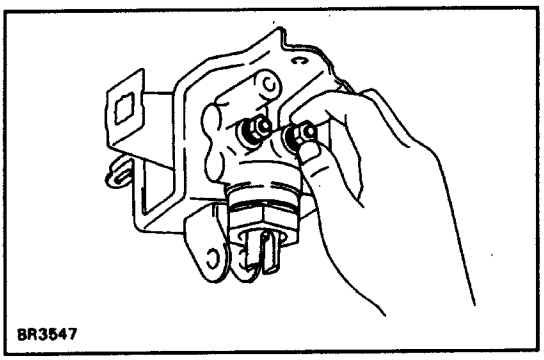

2. ASSEMBLE VALVE BODY TO BRACKET

Assemble the valve body to the valve body bracket.
HINT: Finger tighten the valve body mounting nuts.

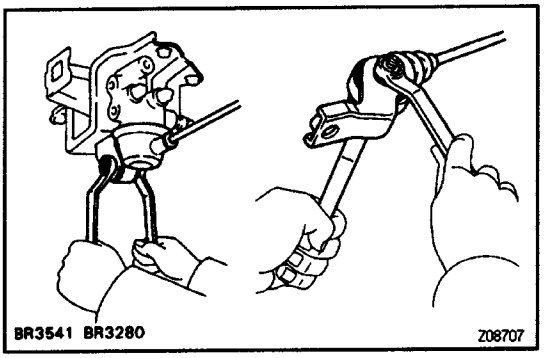

3. CONNECT VALVE BODY AND ND.1 SHACKLE TO LOAD SENSING SPRING

CAUTION: When connecting the shackle to the load sensing with a bolt and nut, Insert the bolt from the front side of vehicle.

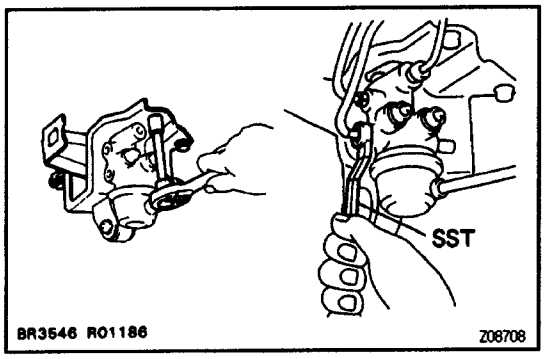

LSP & BV INSTALLATION

1. INSTALL LSP & BV ASSEMBLY TO FRAME

Torque: 19 N–m (195 kgf–cm, 14 ft–lbf)

2. CONNECT BRAKE LINE

Using SST, connect the brake lines.
Torque: 15 N–m (155 kgf–cm, 11 ft–lbf)
SST 08751–36011

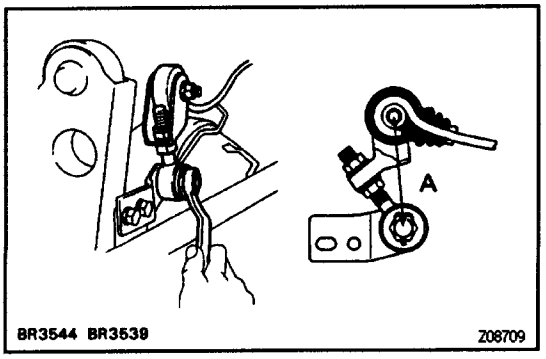

3. CONNECT SHACKLE NO.2 BRACKET

(a) Install shackle No.2 to the load sensing spring.
(b) Connect the shackle No.2 to the shackle bracket.
(c) Set dimension A.
Initial set:
78 mm (3.07 in.)

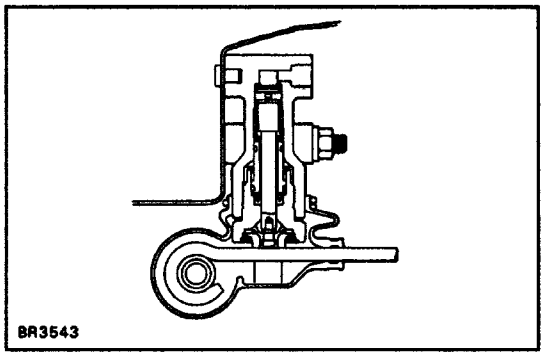
BR3543

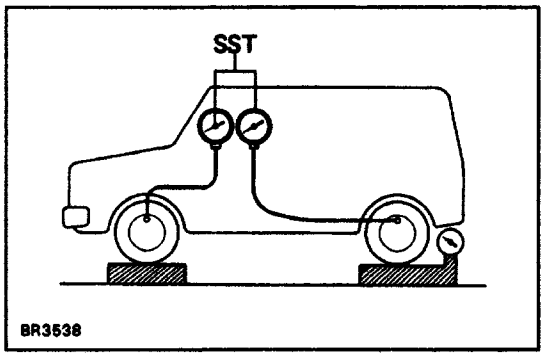

BR3538

4. SET REAR AXLE LOAD

(See page BR–33**)**

5. SET VALVE BODY

(a) When pulling down the load sensing spring, confirm that the valve piston moves down smoothly.

(b) Position the valve body so that the valve piston lightly contacts the load sensing spring.

(c) Tighten the valve body mounting nuts.

6. BLEED BRAKE LINE

(See page BR–8**)**

7. CHECK AND ADJUST LSP & BV FLUID PRESSURE

(See page BR–33**)**

8. APPLY SEALANT TO SHACKLE NO.2

Apply sealant to the top portion of the shackle No.2 bolt threads not to lose the upper lock nut.

Sealant:

Part No. 08833–00070, THREE BOND 1324 or equivalent

MASTER CYLINDER

MASTER CYLINDER REMOVAL

w/o 4-Wheel ABS

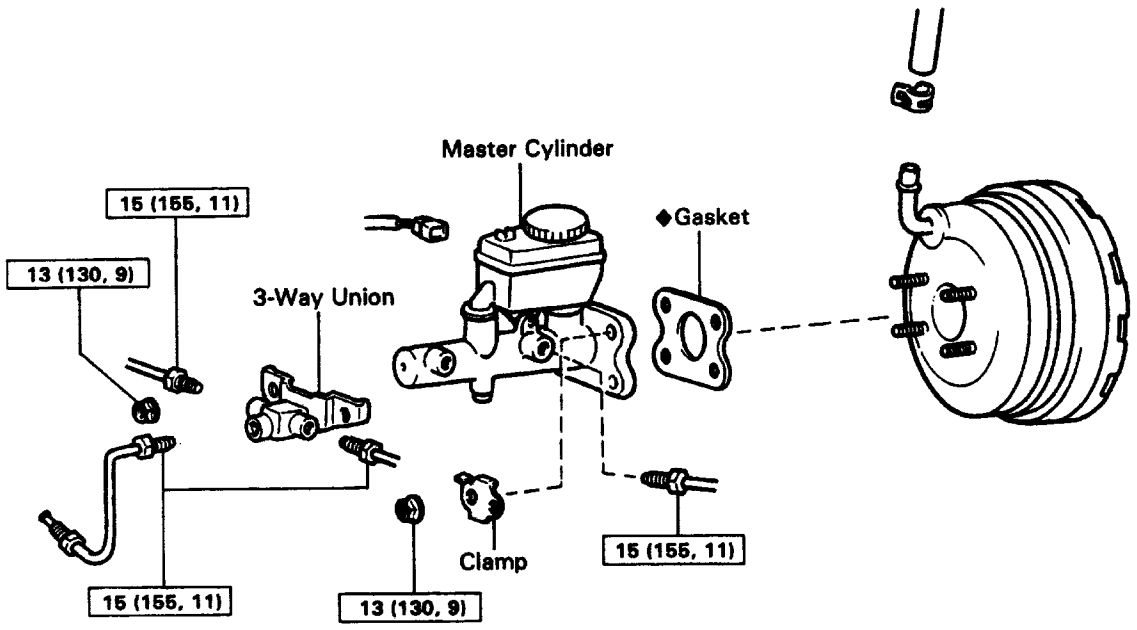

w/ 4-Wheel ABS

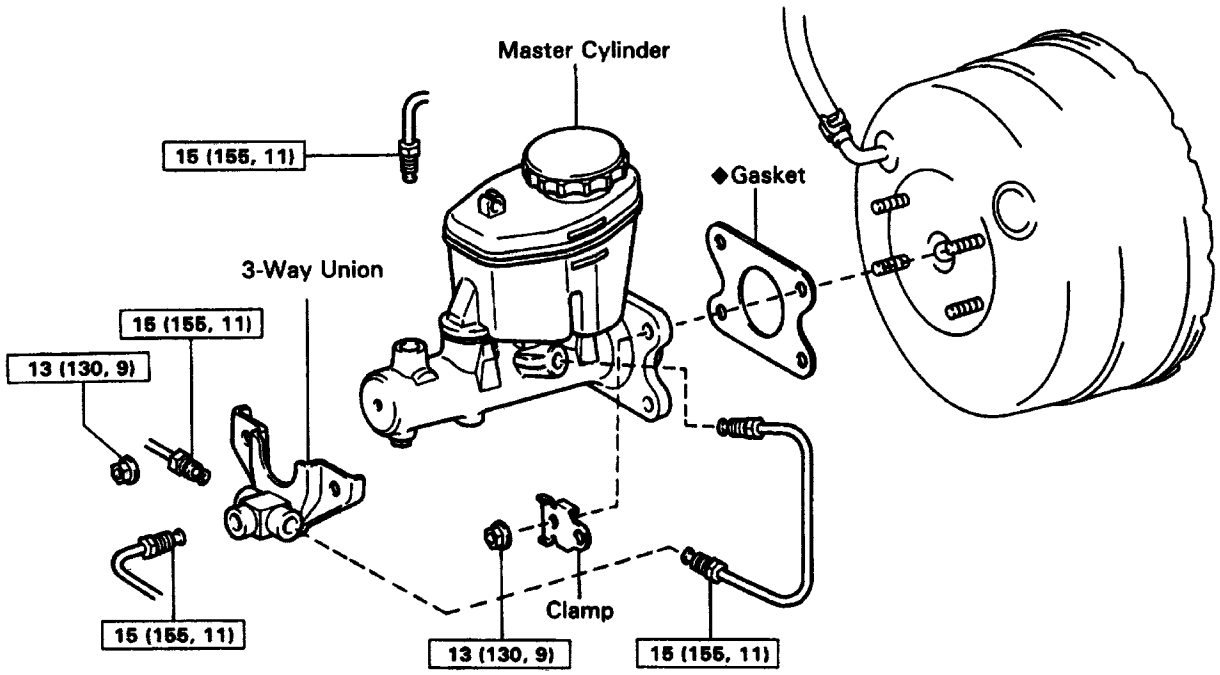

N·m (kgf·cm, ft·lbf) : Specified torque

◆ Non-reusable part

R07795
R07878

Z09792

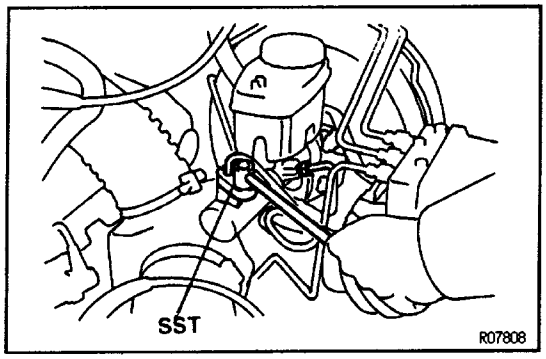

1. DISCONNECT LEVEL WARNING SWITCH CONNEC–TOR

2. TAKE OUT FLUID WITH SYRINGE

NOTICE: Do not let brake fluid remain on a painted surface. Wash it off immediately.

3. DISCONNECT BRAKE LINES

Using SST, disconnect the brake lines from the master cylinder.

SST 09023 – 00100

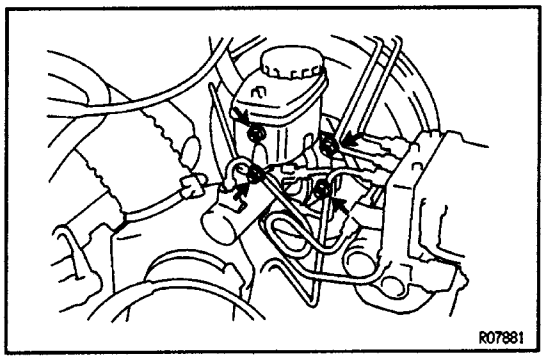

4. REMOVE MASTER CYLINDER

(a) Remove the 4 nuts and 3–way union.

(b) Remove the clamp.

(c) Remove the master cylinder and gasket from the brake booster.

COMPONENTS

w / o 4-Wheel ABS

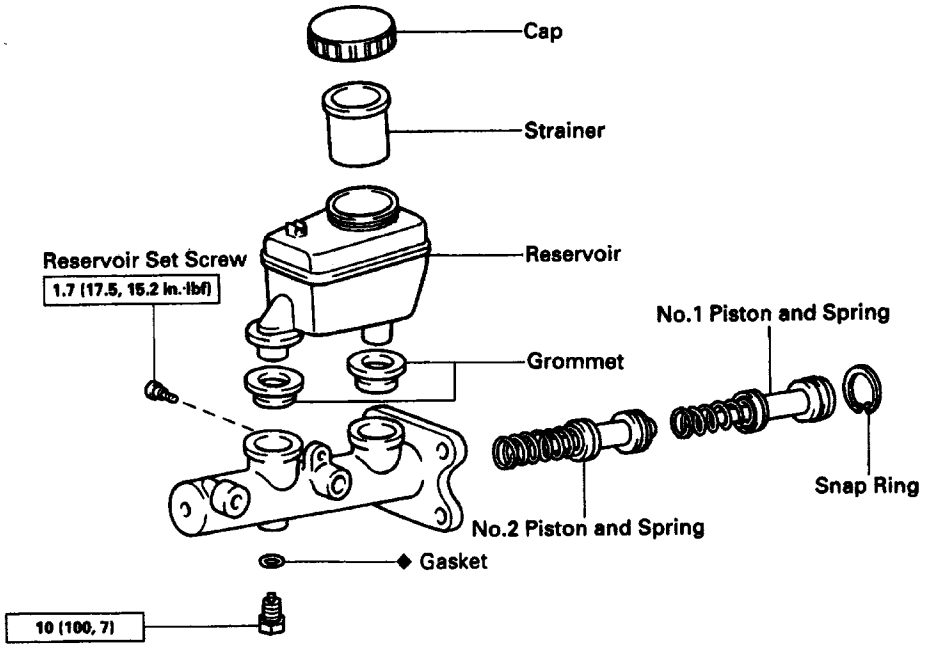

w / 4-Wheel ABS

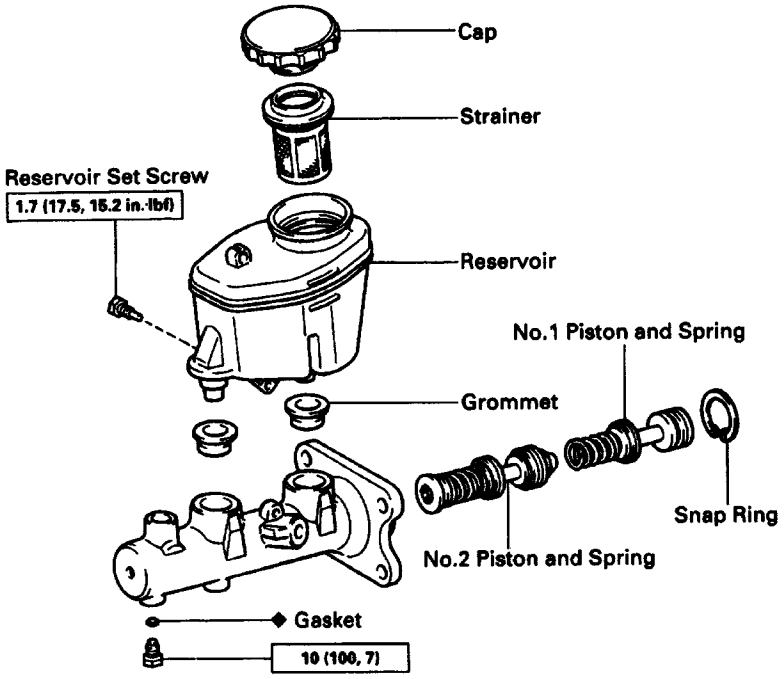

N·m (kgf·cm, ft·lbf) : Specified torque
◆ Non-reusable part

R07796
R07797

Z14150

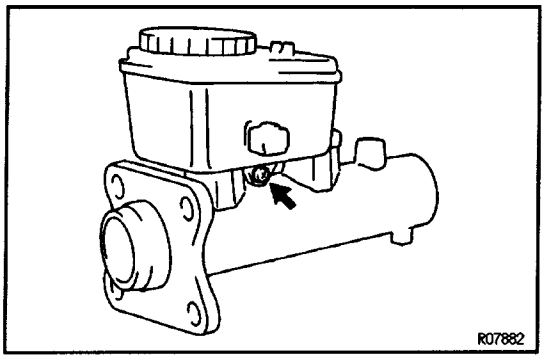

MASTER CYLINDER DISASSEMBLY

1. REMOVE RESERVOIR

(a) Remove the set screw and pull out the reservoir.

(b) Remove the cap and strainer from the reservoir.

2. REMOVE 2 GROMMETS

3. PLACE CYLINDER IN VISE

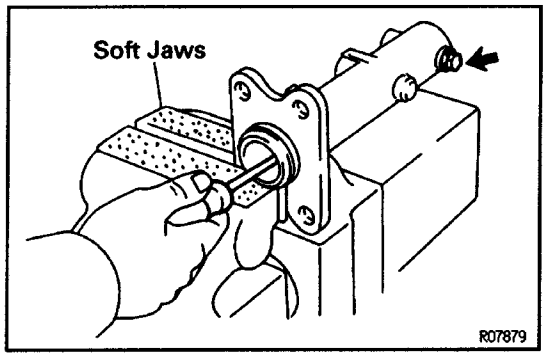

4. REMOVE PISTON STOPPER BOLT

Using a screwdriver, push the pistons in all the way and remove the piston stopper bolt and gasket.

HINT: Tape the screwdriver tip before use.

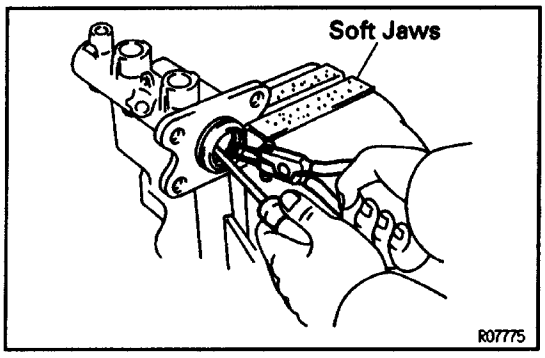

5. REMOVE PISTONS AND SPRINGS

(a) Push in the piston with a screwdriver and remove the snap ring with snap ring pliers.

(b) Remove the No.1 piston and spring by hand, pulling straight out, not at an angle.

NOTICE: If pulled out at an angle, there is a possibility of damaging the cylinder bore.

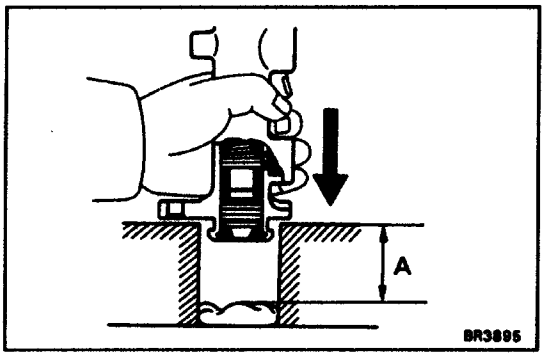

(c) Place a rag and 2 wooden blocks on the work table, and lightly tap the cylinder flange against the block edges until the No.2 piston drops out of the cylinder.

HINT: Make sure the distance (A) from the rag to the top of the blocks is at least 100 mm (3.94 in.).

MASTER CYLINDER COMPONENTS INSPECTION

HINT: Clean the disassembled parts with compressed air.

1. INSPECT CYLINDER BORE FOR RUST OR SCORING

2. INSPECT CYLINDER FOR WEAR OR DAMAGE

If necessary, clean or replace the cylinder.

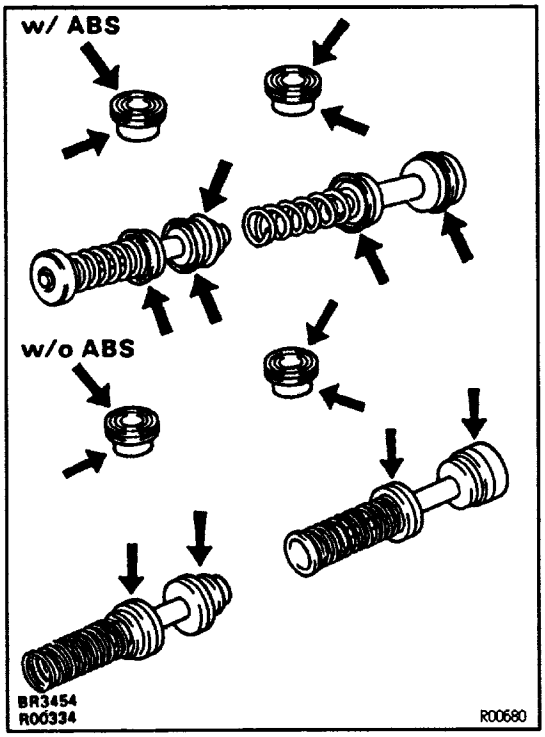

MASTER CYLINDER ASSEMBLY

1. APPLY LITHIUM SOAP BASE GLYCOL GREASE TO RUBBER PARTS INDICATED BY ARROWS

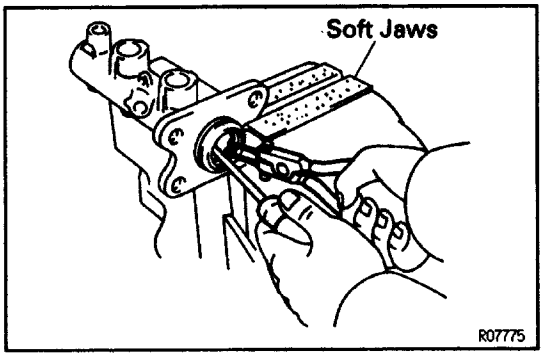

2. INSTALL PISTONS AND SPRINGS

NOTICE: Be careful not to damage the rubber lips on the pistons.

(a) Insert the 2 springs and pistons straight in, not at an angle.

NOTICE: If Inserted at an angle, there Is a possibility of damaging the cylinder bore.

(b) Push in the piston with a screwdriver and install the snap ring with snap ring pliers.

HINT: Tape the screwdriver tip before use.

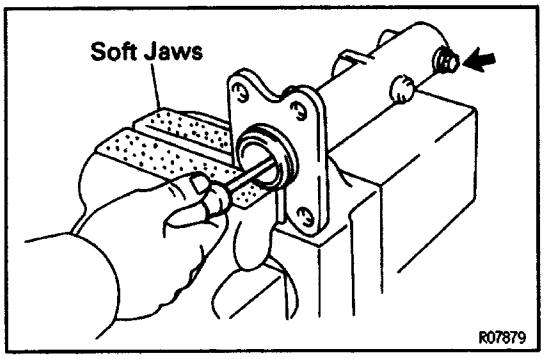

3. INSTALL PISTON STOPPER BOLT

Using a screwdriver, push the piston in all the way and install the piston stopper bolt over the gasket. Torque the bolt.

Torque: 10 N–m (100 kgf–cm, 7 ft–lbf)

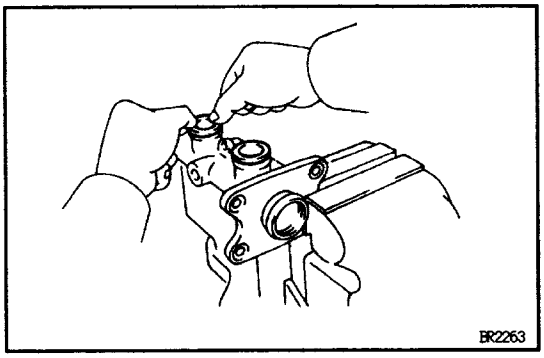

4. INSTALL 2 GROMMETS

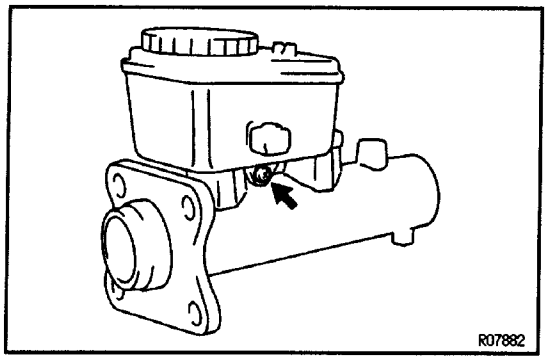

5. INSTALL RESERVOIR

(a) Install the cap and strainer to the reservoir.
(b) Push the reservoir onto the cylinder.
(c) Install the set screw while pushing on the reservoir.
Torque: 1.7 N–m (17.5 kgf–cm, 15.2 in–lbf)

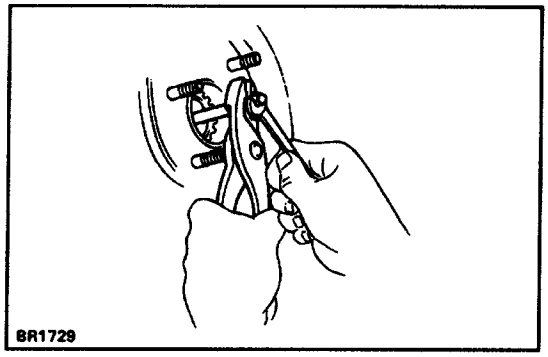

MASTER CYLINDER INSTALLATION

1. ADJUST LENGTH OF BRAKE BOOSTER PUSH ROD BEFORE INSTALLING MASTER CYLINDER
(See page BR–17)

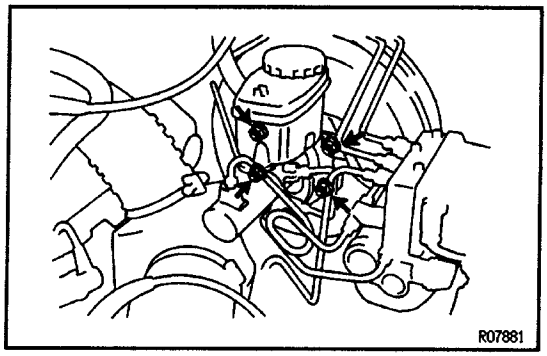

2. INSTALL MASTER CYLINDER

Install the master cylinder, 3–way union, clamp and gasket on the brake booster with 4 nuts.
Torque: 13 N–m (130 kgf–cm, 9 ft–lbf)

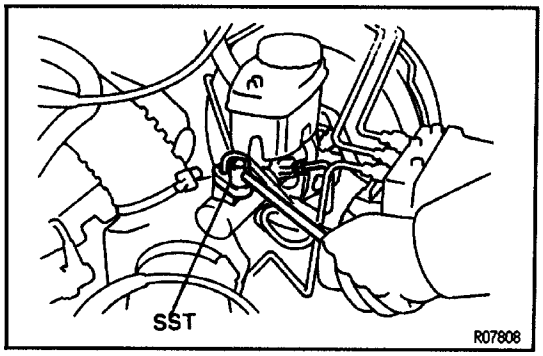

3. CONNECT BRAKE LINES

Using SST, connect the brake lines to the master cylinder. Torque the union nuts.
SST 09023 – 00100
Torque: 15 N–m (155 kgf–cm, 11 ft–lbf)

4. CONNECT LEVEL WARNING SWITCH CONNECTOR

5. FILL BRAKE RESERVOIR WITH BRAKE FLUID AND BLEED BRAKE SYSTEM
(See page BR–8)

6. CHECK FOR FLUID LEAKAGE

7. CHECK AND ADJUST BRAKE PEDAL
(See page BR–7)

GENERAL DESCRIPTION

1. Care must be taken to replace each part properly a: it could affect the performance of the brake system and result in a driving hazard. Replace the parts with parts of the same part number or equivalent.
2. It is very important to keep parts and the area clean when repairing the brake system.
3. If the vehicle is equipped with a mobile communication system, refer to the precaution in the IN section.

DESCRIPTION

The service brakes consist of a foot brake which changes rotational energy to thermal energy to stop the vehicle while it is being driven and a parking brake to keep the vehicle from moving while it is parked.

OPERATION

FOOT BRAKE

When the brake pedal is depressed, a vacuum builds up in the booster which amplifies the pedal force, pressing on the piston in the master cylinder. The piston movement raises the hydraulic pressure in the cylinder. This hydraulic pressure is then applied to each respective brake cylinder and wheel cylinder, and acts to press the brake pads and shoes against the rotating discs and drums. The resulting friction converts the rotational energy to thermal energy, stopping the vehicle.

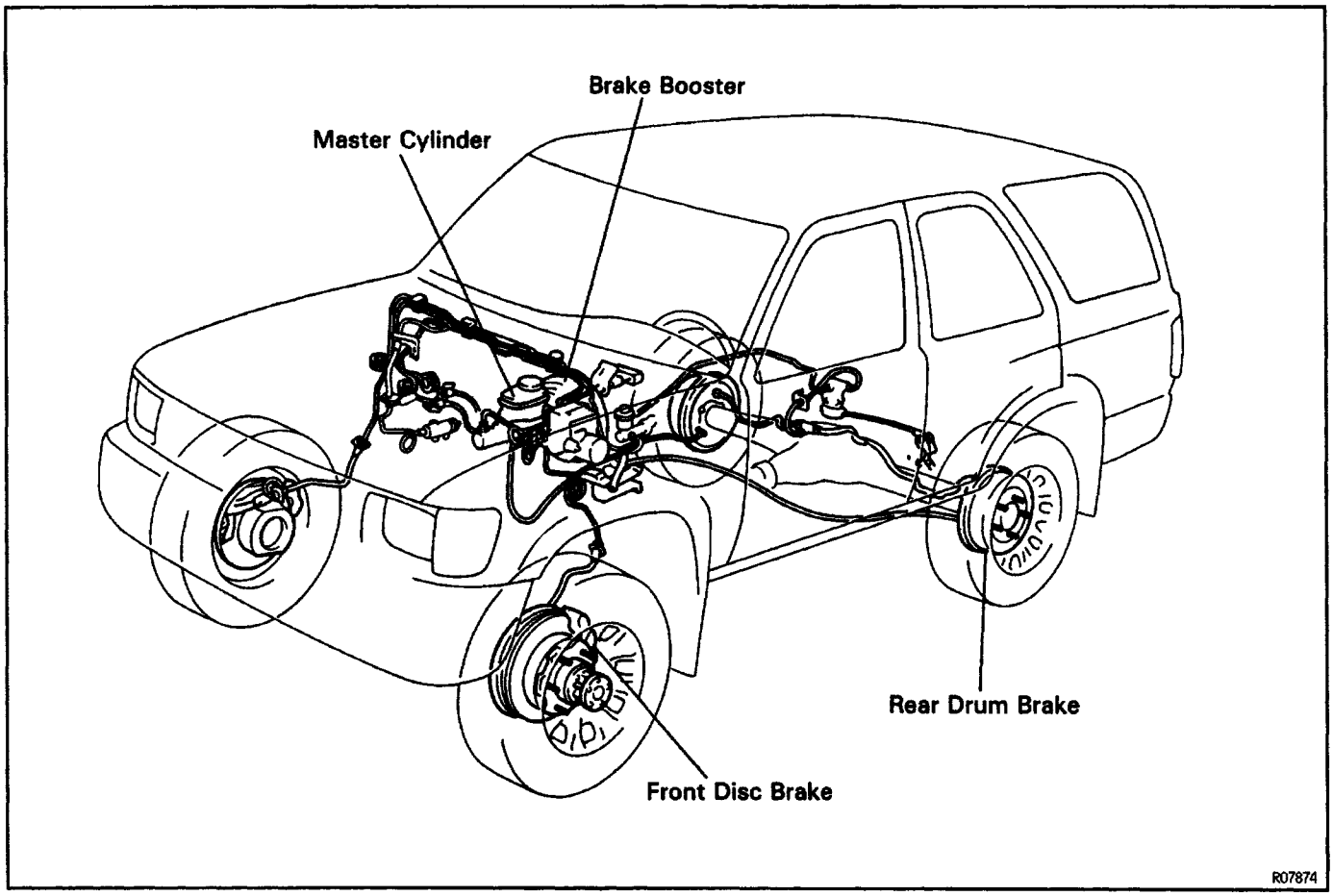

PARKING BRAKE

When the parking brake lever is pulled, the parking brake shoe lever is pulled via the parking brake wire. This causes the adjuster to push the front shoe, which expands and is pressed against the parking brake drum. If the parking brake lever continues to be pulled, the contact point of the parking brake shoe lever and adjuster then becomes the fulcrum so that the parking brake shoe lever causes the parking brake shoe to expand. This results in the parking brake drum being locked by the right shoe and left shoe.

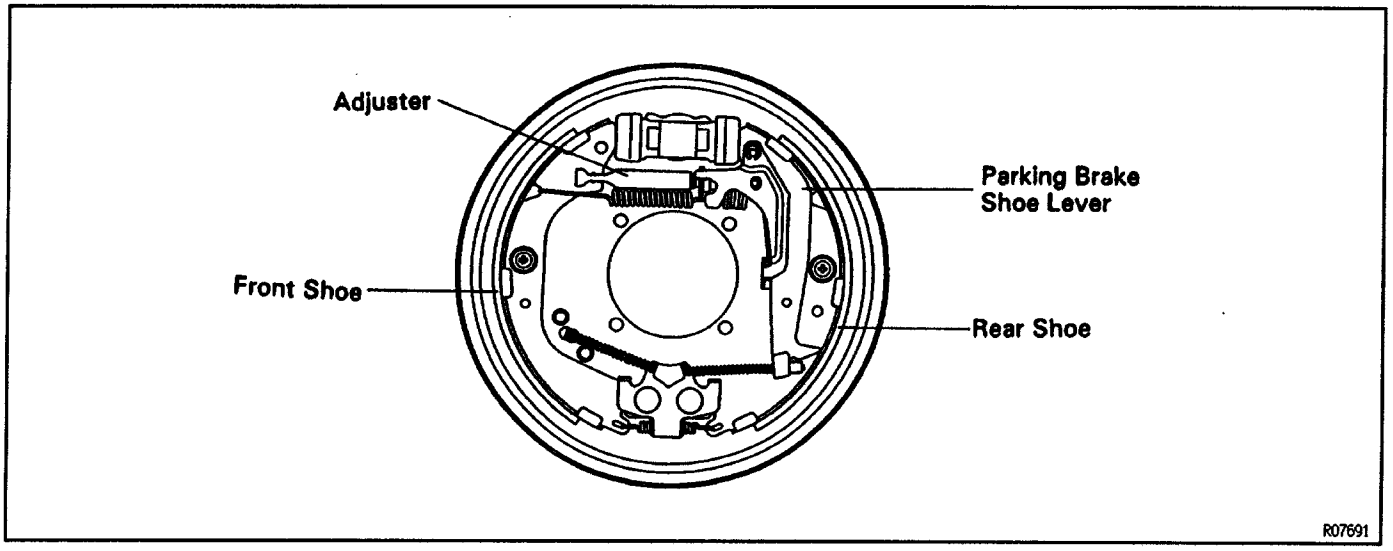

PREPARATION

SST (SPECIAL SERVICE TOOLS)

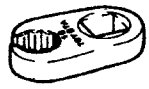	**09023–00100** Union Nut Wrench 1 0 mm	
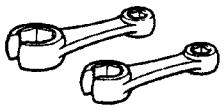	**09631–22020** Power Steering Hose Nut 14 x 17 mm Wrench Set	w/ Rear–wheel anti–lock brake system
	**09703–30010** Brake Shoe Return Spring Tool	
	**09709–29017** LSPV Gauge Set	
	**09718–00010** Shoe Hold Down Spring Driver	
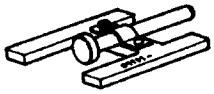	**09737–00010** Brake Booster Push Rod Gauge	
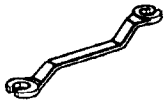	**09751–36011** Brake Line Union Nut 10 x 12 mm Wrench	
	**09843–18020** Diagnosis Check Wire	w/ Rear–wheel anti–lock brake system and 4–wheel anti–lock brake system
	**09990–00150** ABS Actuator Checker and Sub–harness	w/ Rear–wheel anti –lock brake system and 4–wheel anti–lock brake system
	**09990–00200** ABS Actuator Checker Sub–harness “C”	w/ 4–wheel anti–lock brake system
	**09990–00210** ABS Actuator Checker Sub–harness “E”	w/ 4–wheel anti–lock brake system
	**09990–00205** ABS Actuator Checker Sub–harness “D”	w/ Rear–wheel anti–lock brake system
	**09990–00370** ABS Actuator Checker Sheet ’L’	w/ 4–wheel anti–lock brake system

RECOMMENDED TOOLS

	09082–00050 TOYOTA Electrical Tester Set.	
	09905–00013 Snap Ring Pliers.	

EQUIPMENT

Torque wrench	
Micrometer	Brake disc
Dial indicator	Brake disc
Vernier calipers	Brake drum

LUBRICANT

Item	Capacity	Classification
Broke fluid	–	SAE J 1703 or FMVSS No. 116 DOT 3
Power steering fluid	–	ATF DEXRON' 11

SSM (SPECIAL SERVICE MATERIALS)

	08833–00070 Adhesive 1324, THREE BOND 1324 or equivalent	LSPV & BV shackle No.2 lock nut

REAR BRAKE
COMPONENTS

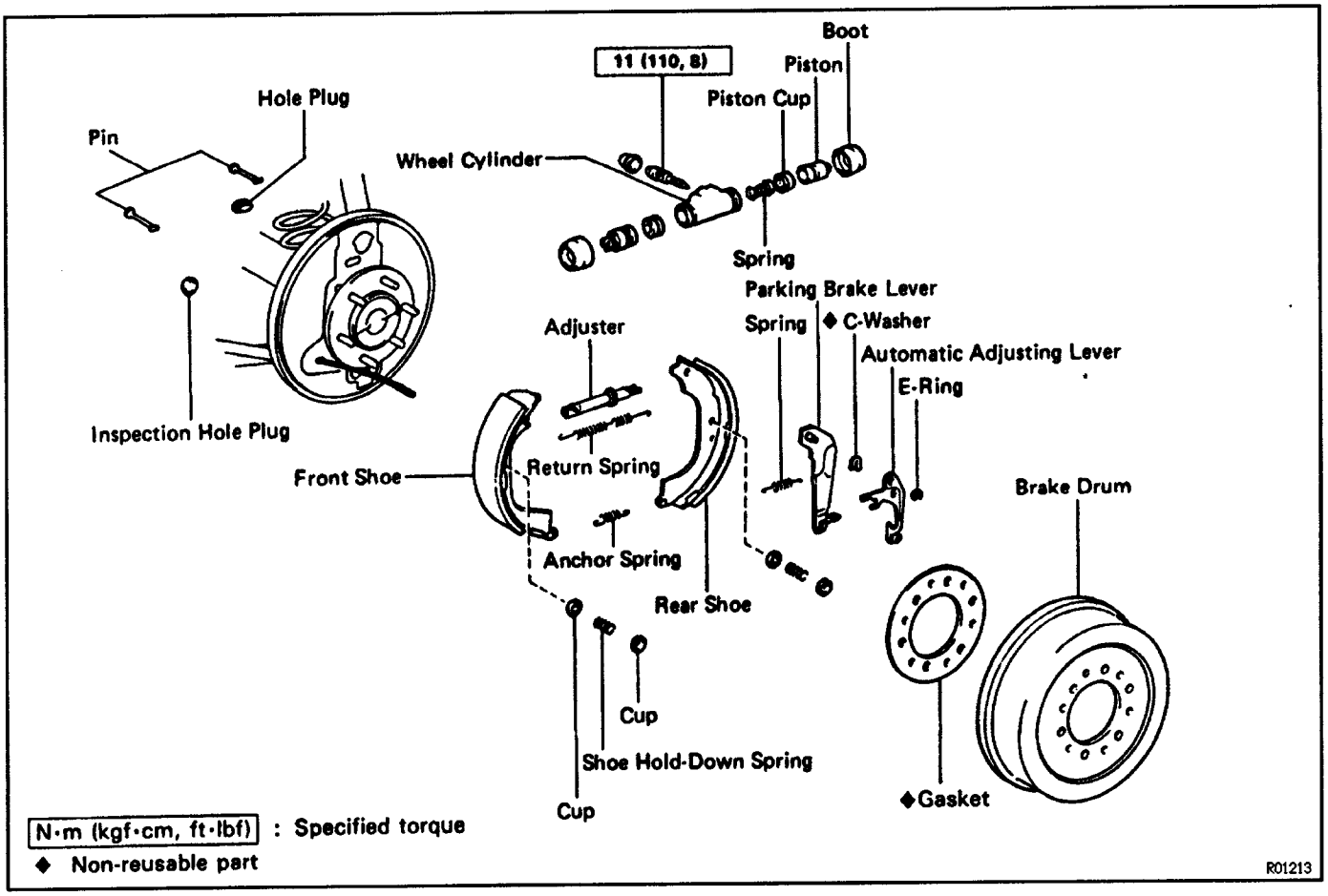

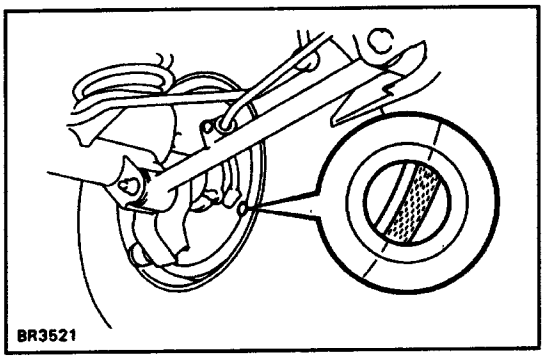

REAR BRAKE REMOVAL

1. INSPECT SHOE LINING THICKNESS

Remove the inspection hole plug, and check the shoe lining thickness through the hole.

If less than minimum, replace the shoes.

Minimum thickness:

1.0 mm (0.039 in.)

2. REMOVE REAR WHEEL

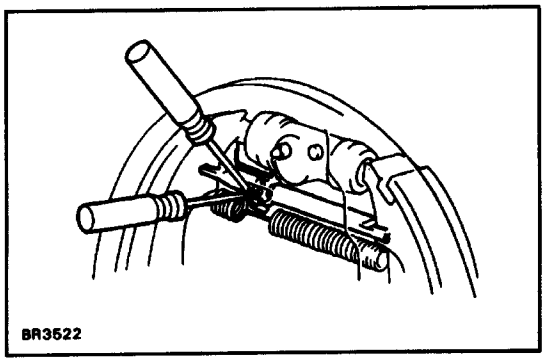

3. REMOVE BRAKE DRUM

HINT: If the brake drum cannot be easily removed, do the following steps.

(a) Insert a screwdriver through the hole in the backing plate, and hold the automatic adjusting lever away from the adjusting bolt.

(b) Using another screwdriver, reduce the brake shoe adjustment by turning the adjusting bolt.

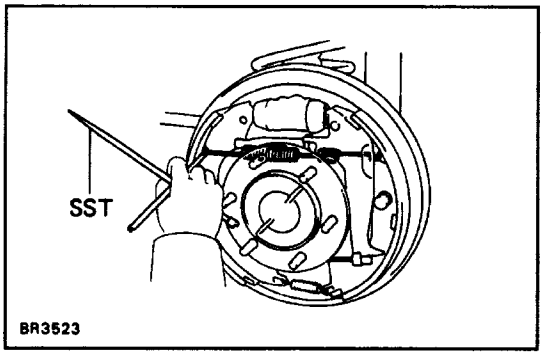

4. REMOVE FRONT SHOE

(a) Using SST, disconnect the return spring.
SST 09703–30010

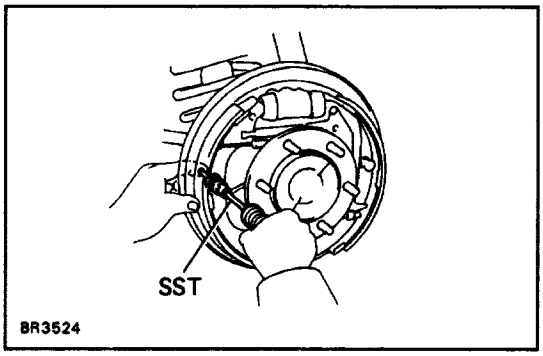

(b) Using SST, remove the shoe hold–down spring, cups and pin.
SST 09718 – 00010
(c) Disconnect the anchor spring from the front shoe and remove the front shoe.
(d) Remove the anchor spring from the rear shoe.

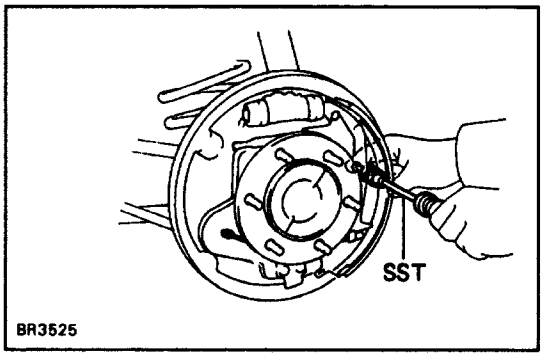

5. REMOVE ADJUSTER AND REAR SHOE

(a) Remove the return spring from the rear shoe.
(b) Using SST, remove the shoe hold–down spring, cups and pin.
SST 09718 – 00010

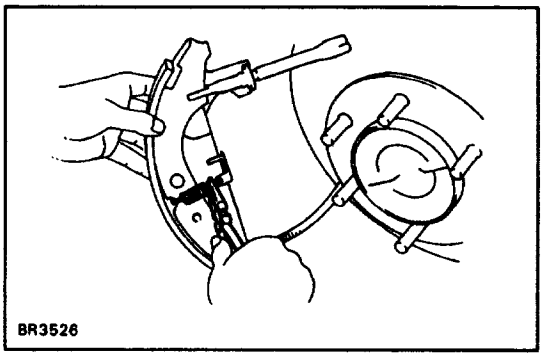

(c) Remove the adjusting lever spring.

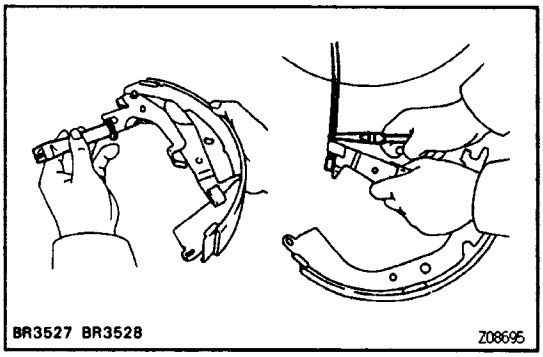

(d) Remove the adjuster together with the return spring.
(e) Using a pliers, disconnect the parking brake cable from the lever and remove the rear shoe.

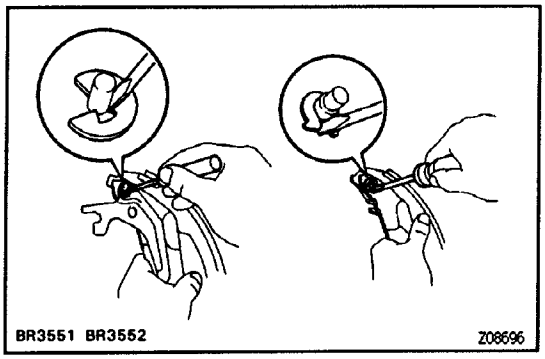

6. REMOVE AUTOMATIC ADJUSTING LEVER AND PARKING BRAKE LEVER

(a) Remove the E–ring.
(b) Remove the automatic adjusting lever.
(c) Remove the C–washer.
(d) Remove the parking brake lever.

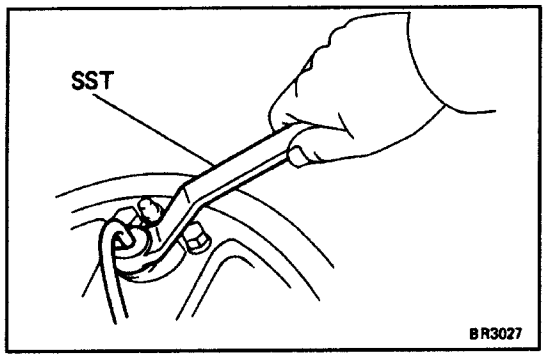

7. REMOVE WHEEL CYLINDER

(a) Using SST, disconnect the brake line. Use a container to catch the brake fluid.
SST 09751–36011
(b) Remove the 2 bolts and wheel cylinder.

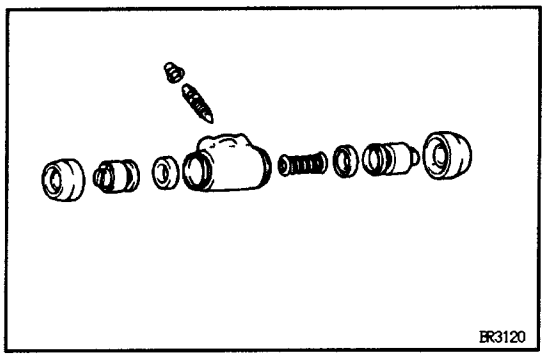

8. REMOVE THESE PARTS FROM WHEEL CYLINDER:

(a) 2 boots
(b) 2 pistons
(c) 2 piston cups
(d) Spring

REAR BRAKE COMPONENTS INSPECTION AND REPAIR

1. INSPECT DISASSEMBLED PARTS

Inspect the disassembled parts for wear, rust or damage.

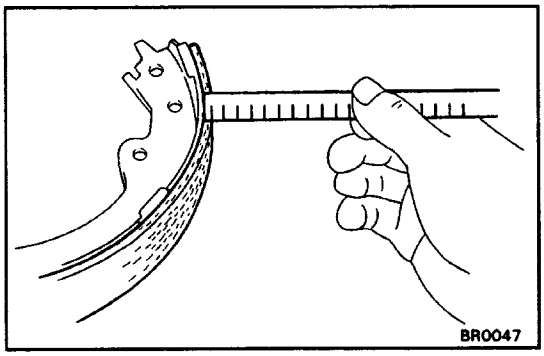

2. MEASURE BRAKE SHOE LINING THICKNESS

Using a ruler, measure the thickness of the shoe lining.

Standard thickness:

6.0 mm (0.236 in.)

Minimum thickness:

1.0 mm (0.039 in.)

If the shoe lining is less than minimum or shows signs of uneven wear, replace the brake shoes.

HINT: If any of the brake shoes have to be replaced, replace all of the rear brake shoes in order to maintain even braking.

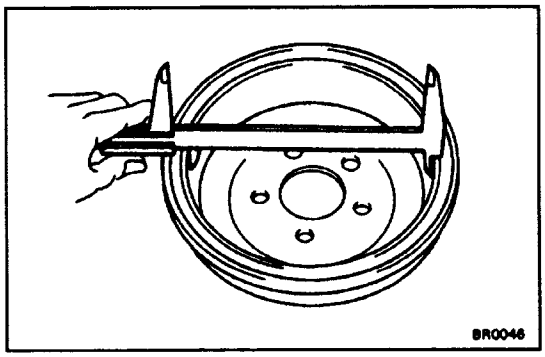

3. MEASURE BRAKE DRUM INSIDE DIAMETER

Using a vernier caliper, measure the inside diameter of the drum.

Standard inside diameter:

295.0 mm (11.61 in.)

Maximum inside diameter:

297.0 mm (11.69 In.)

If the drum is scored or worn, the brake drum may be lathed to the maximum inside diameter.

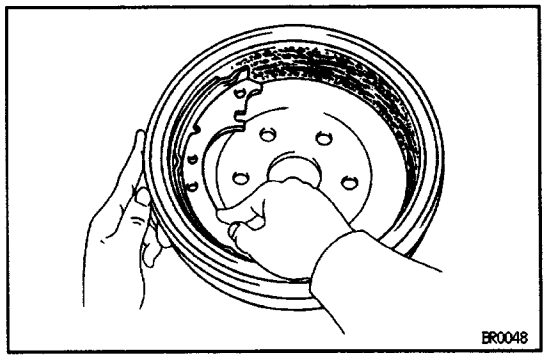

4. INSPECT BRAKE LINING AND DRUM FOR PROPER CONTACT

If the contact between the brake lining and drum is improper, repair the lining with a brake shoe grinder, or replace the brake shoe assembly.

REAR BRAKE INSTALLATION

HINT: Assemble the parts in the correct direction, as shown.

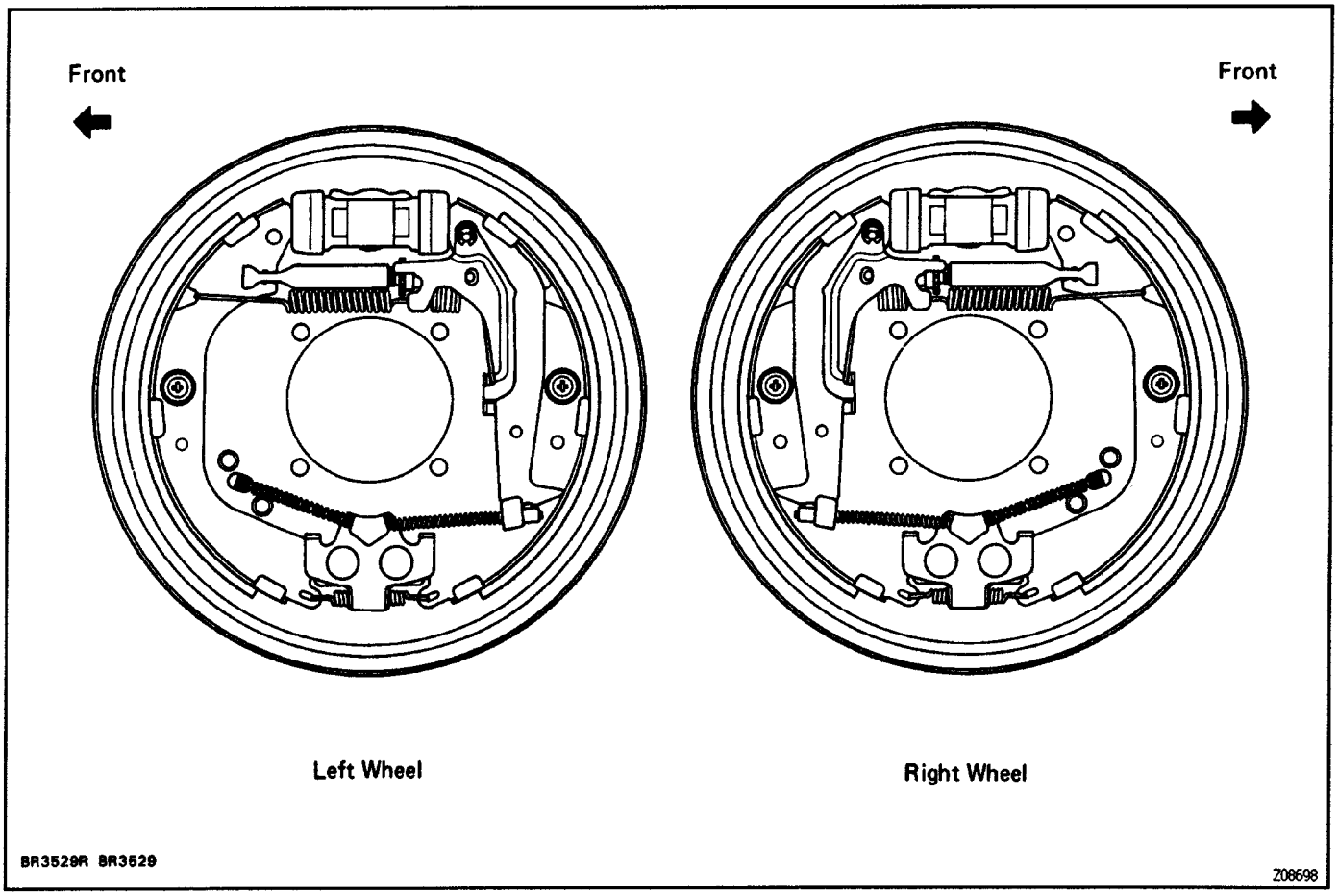

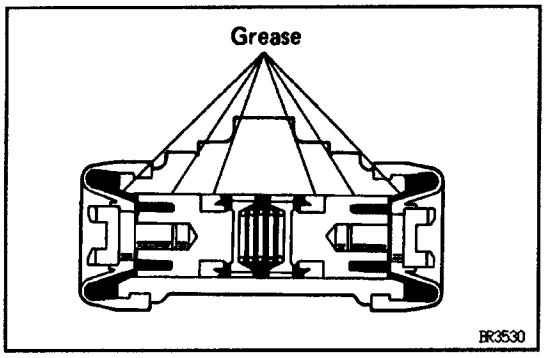

1. APPLY LITHIUM SOAP BASE GLYCOL GREASE TO THESE PARTS:

(a) 2 piston cups

(b) 2 pistons

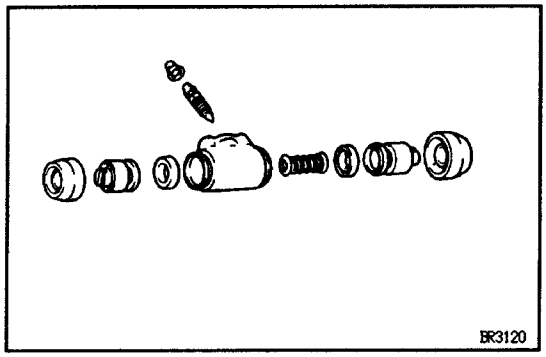

2. ASSEMBLE WHEEL CYLINDER

(a) Install the piston cup to the each piston.

(b) Install the spring and 2 pistons into the wheel cylinder. Make sure flanges of the piston cups are pointed inward.

(c) Install the 2 boots.

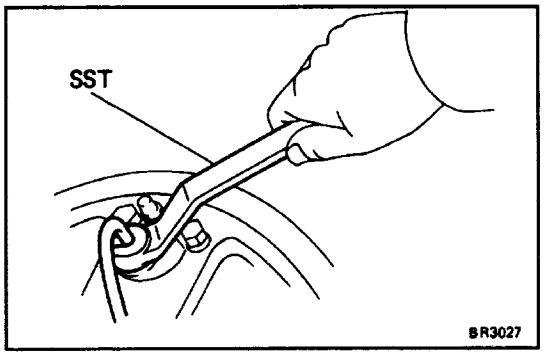

3. INSTALL WHEEL CYLINDER

(a) Install the wheel cylinder on the backing plate with the 2 bolts.

Torque: 10 N–m (100 kgf–cm, 7 ft–lbf)

(b) Using SST, connect the brake line.
SST 09751–36011

Torque: 15 N–m (155 kgf–cm, 11 ft–lbf)

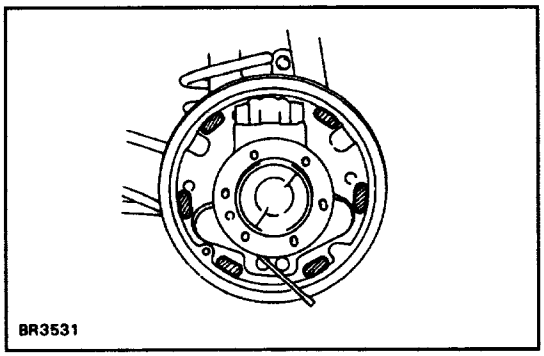

4. APPLY HIGH TEMPERATURE GREASE TO THESE PARTS:

(a) Backing plate and brake shoe contact points

(b) Anchor plate and brake shoe contact points

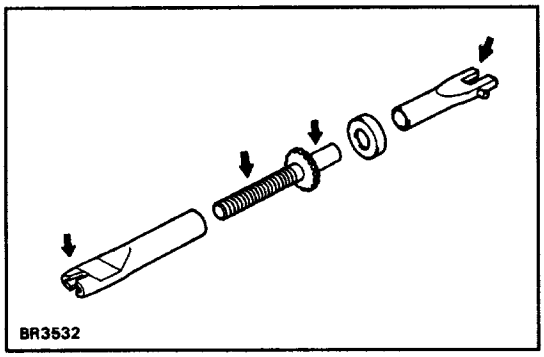

(c) Adjusting bolt

(d) Adjuster and brake shoe contact points

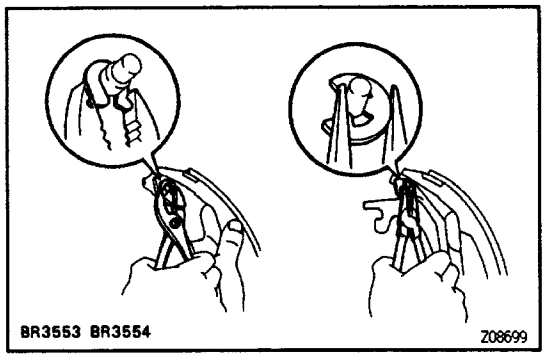

5. INSTALL PARKING BRAKE LEVER AND AUTOMATIC ADJUSTING LEVER

(a) Install the parking brake lever with a new C–washer.

(b) Install the automatic adjusting lever with the E –ring.

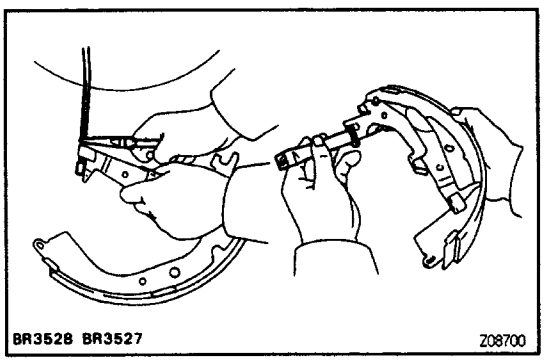

6. INSTALL ADJUSTER AND REAR SHOE

NOTICE: Do not allow oil or grease to get on the rubbing face.

(a) Using a pliers, connect the parking brake cable to the lever.

(b) Install the adjuster to the adjusting lever.

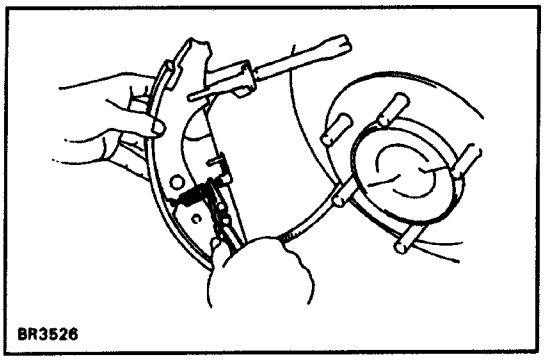

(c) Install the adjusting lever spring.

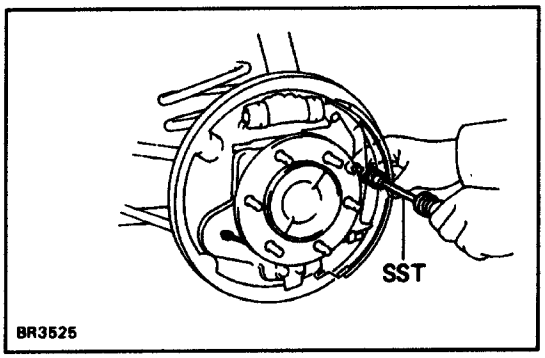

(d) Set the rear shoe in place with the end of the shoe inserted in the wheel cylinder and the other end in the anchor plate.

(e) Using SST, install the shoe hold–down spring, cups and pin.
SST 09718–00010

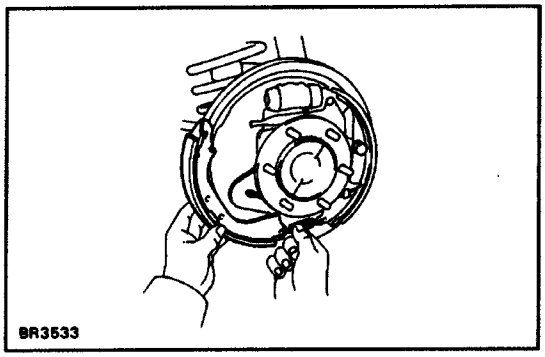

7. INSTALL FRONT SHOE

NOTICE: Do not allow oil or grease to got on the rubbing face.

(a) Install the anchor spring between the front and rear shoes.

(b) Set the front shoe in place with the end of the shoe inserted in the wheel cylinder and the adjuster in place.

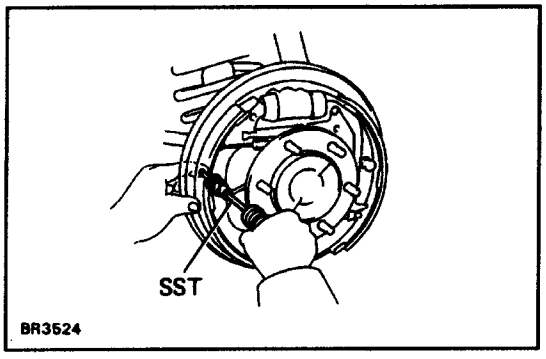

(c) Using SST, install the shoe hold–down spring, cups and pin.
SST 09 718 – 00010

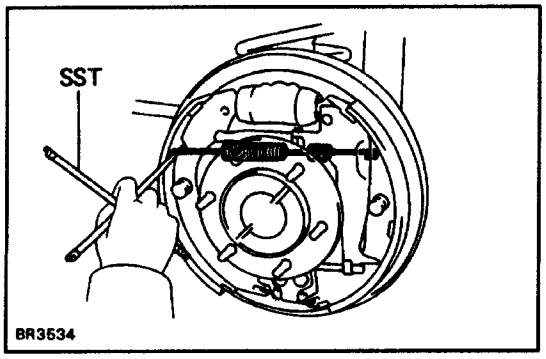

(d) Using SST, connect the return spring.
SST 09703–30010

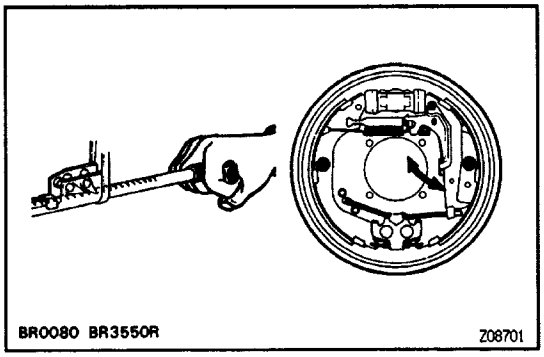

8. CHECK OPERATION OF AUTOMATIC ADJUSTER MECHANISM

(a) Move the parking brake lever of the rear shoe back and forth, as shown. Check that the adjuster turns. If the adjuster does not turn, check for incorrect installation of the rear brakes.

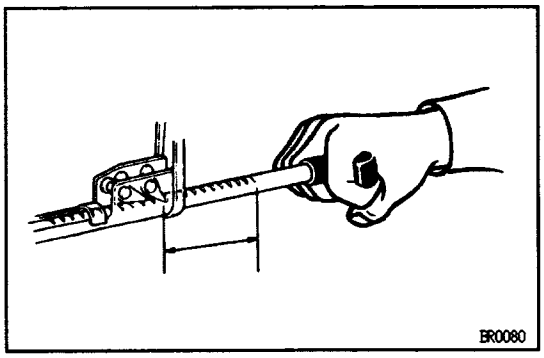

(b) Adjust the adjuster length to the shortest possible amount.

(c) Install the drum.

(d) Pull the parking brake lever all the way up until a clicking sound can no longer be heard.

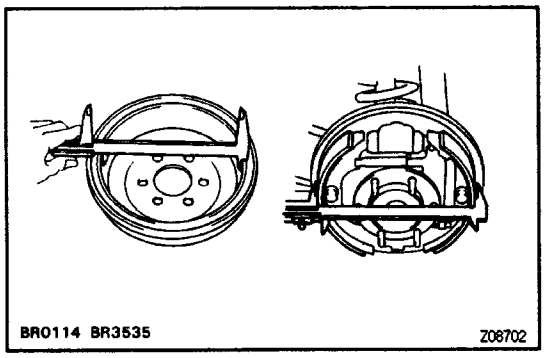

9. CHECK CLEARANCE BETWEEN BRAKE SHOES AND DRUM

(a) Remove the drum.

(b) Measure the drum inside diameter and diameter of the brake shoes. Check that the difference between the diameters is the correct shoe clearance.

Shoe clearance:

0.6 mm (0.024 in.)

If incorrect, check the parking brake system.

10. INSTALL BRAKE DRUM AND REAR WHEEL

11. FILL BRAKE RESERVOIR WITH BRAKE FLUID AND BLEED BRAKE SYSTEM

(See page BR–8)

12. CHECK FOR FLUID LEAKAGE

ABS ACTUATOR

COMPONENTS

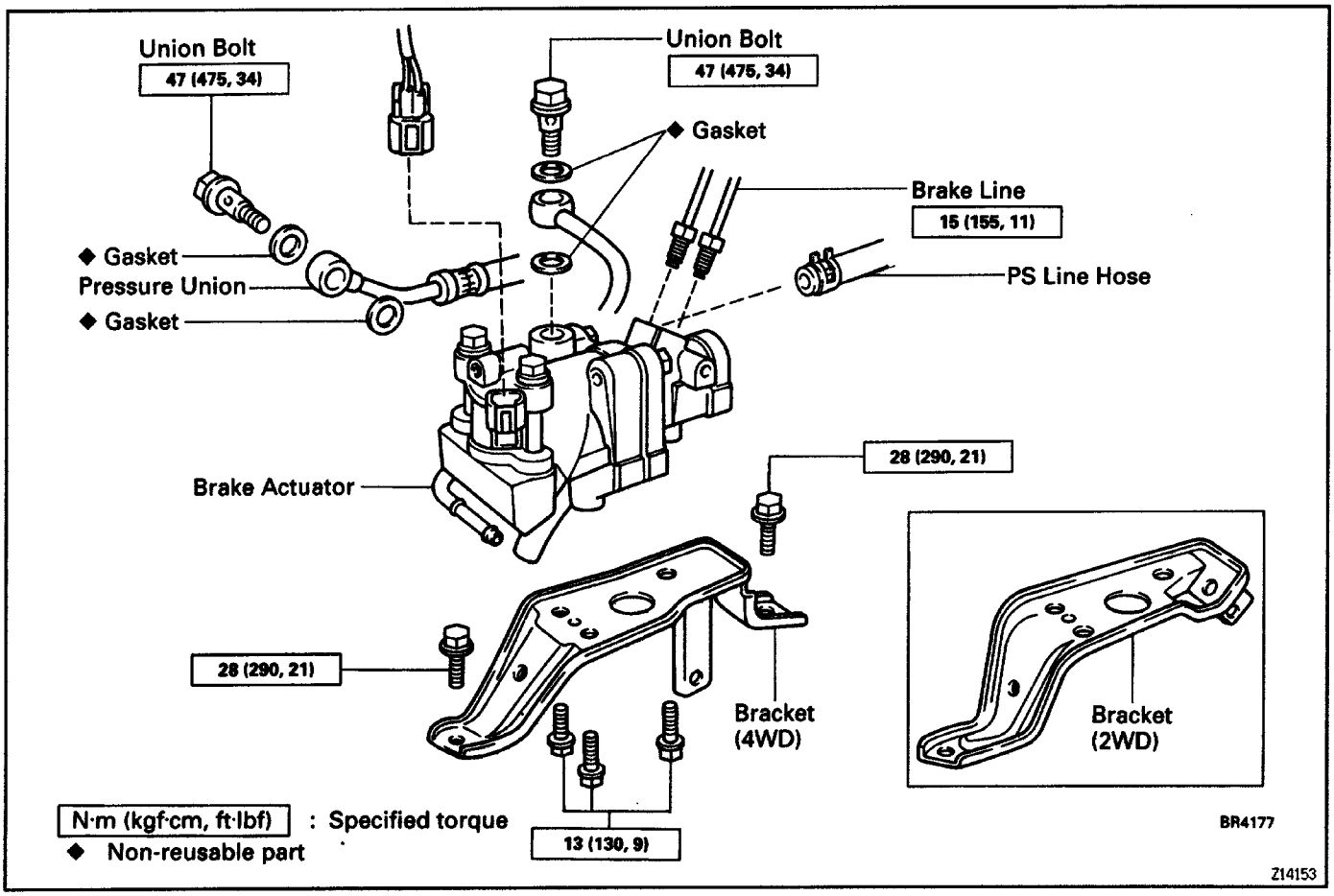

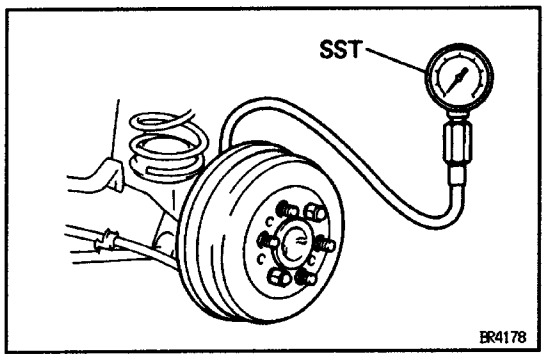

ABS ACTUATOR INSPECTION

1. CHECK BRAKE FLUID PRESSURE

(a) Remove the bleeder plug from the rear wheel cylinder and connect SST.
SST 09709–29017

(b) Bleed the air from SST.

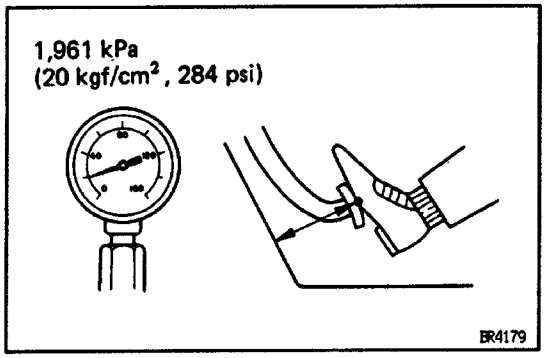

(c) With the engine OFF, hold the brake pedal depressed for about 10 seconds with the pressure at 1,961 kPa (20 kgf/cm^2, 284 psi), and check that there is no change in the pedal reserve distance.
If there is a change is the brake pedal reserve distance, check the brake line, master cylinder and wheel cylinder for leaks.

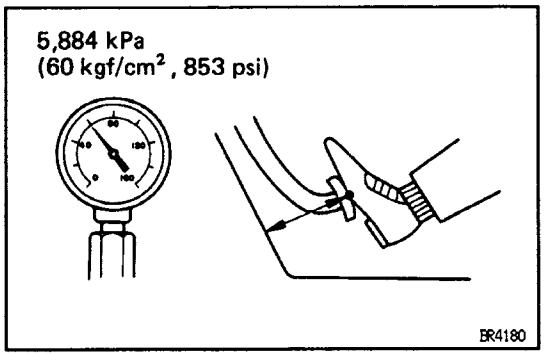

(d) With the engine running, hold the brake pedal depressed for about 10 seconds with the pressure at 5,844 kPa (60 kgf/cm^2, 853 psi), and check that there is no change in the pedal reserve distance.
If there is a change in the brake pedal reserve distance, inspect the brake actuator.

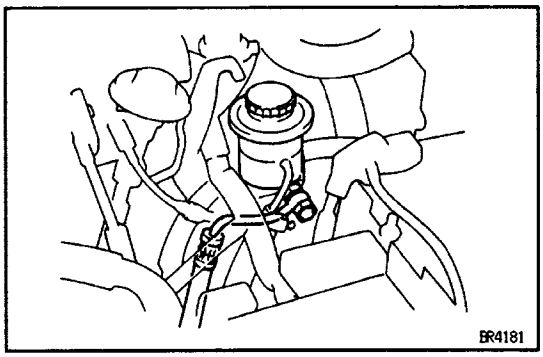

2. CHECK POWER STEERING FLUID PRESSURE

(a) 4WD w/ 22R–E Engine:
Using SST, disconnect the power steering pressure line from the power steering pump.
SST 09631– 22020

(b) Except. 4WD w/ 22R–E Engine:
Remove the union bolt and disconnect the power steering pressure line from the power steering pump.

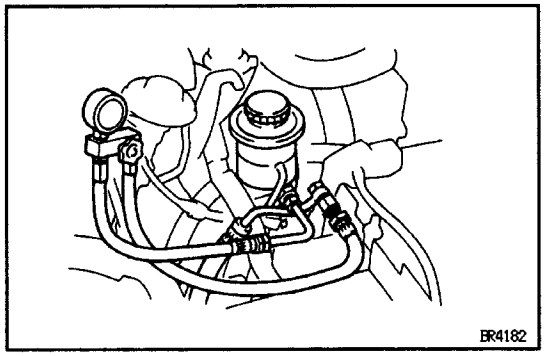

(c) Connect the power steering pressure gauge between the power steering pump and hose with the gauge valve on the actuator side.

(d) Bleed the system and check that the fluid level is correct.
(See page BR–64)

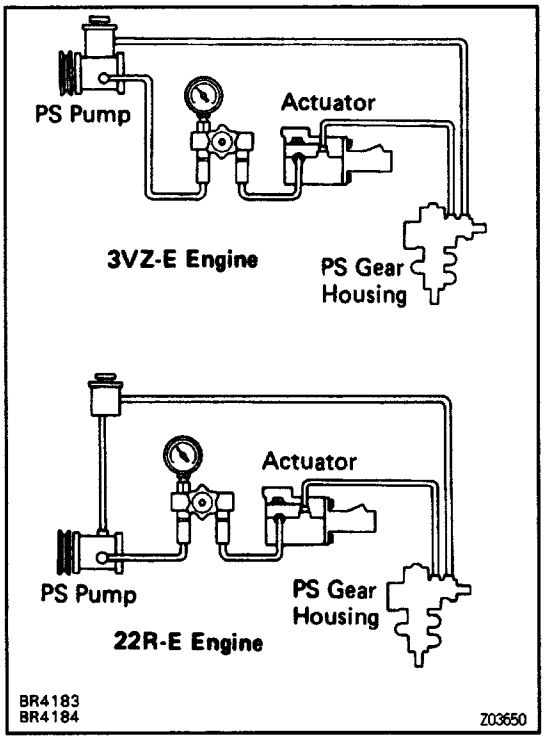

(e) Start the engine and run it at idle.

(f) Close the pressure gauge valve and observe the reading on the gauge.

Maximum pressure:
7,355 kPa (75kgf/cm^2, 1,067 psi)

HINT:

- Do not keep the valve closed for more than 10 seconds.
- Check that the fluid temperature is at least 80° C (176°F).
  If pressure is low, repair or replace the power steering pump.

3. CHECK RELATION BETWEEN BRAKE FLUID AND POWER STEERING FLUID PRESSURE

HINT:

- Be sure the tires are pointing straight–ahead.
  Be sure the power steering pressure gauge valve is fully open.
- Check that the power steering fluid temperature is at least 80° C (176° F).

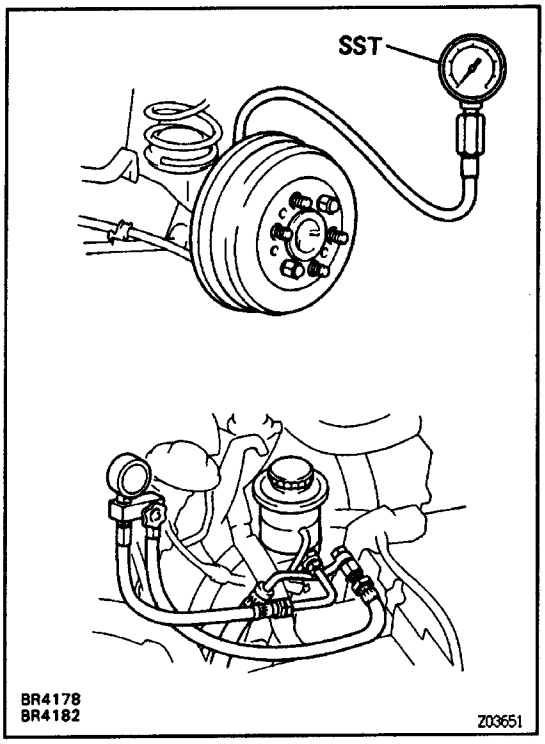

With the engine running, the brake and power steering fluid pressure should conform to the following table.

Brake Fluid Pressure kPa (kgf/cm², psi)	PS Fluid Pressure kPa (kgf/cm², psi)
2,941 (30, 427)	1,596–2,550 (16–26, 228–370)
9,807 (100, 1,422)	3,236–4,609 (33–47, 469–668)

If not within specification, check the actuator.

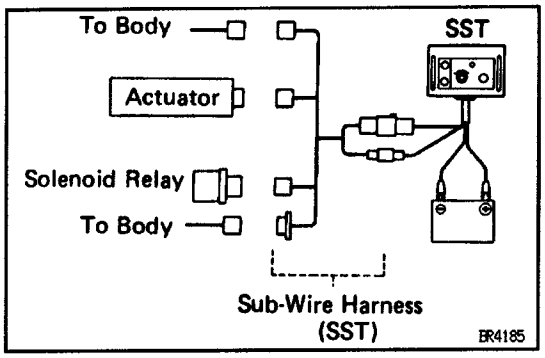

4. CHECK ACTUATOR OPERATION

(a) Disconnect the connector from the actuator.
(b) Disconnect the connector from the solenoid relay.
(c) Connect the actuator checker (SST) to the actuator, solenoid relay and body side wire harness through the sub–wire harness (SST), as shown.
SST 09990–00150 and 09990–00205
(d) Connect the red cable of the checker to the battery positive (+) terminal and black to the negative (–) terminal.
(e) Start the engine, and run it at idle.
(f) Turn the selector switch of actuator checker to "REAR" position.
(g) Strongly depress the brake pedal and hold it.
(h) Push the ON/OFF switch, and check that the brake pedal sinks a little and that it returns to the original position when the switch is released.

NOTICE:

- **To avoid damaging the master cylinder piston cup, do not push SST switch 'ON' before depressing the brake pedal and do not release your foot from the brake pedal while SST switch is pushed 'ON'.**
- **Do not keep pushing the ON/OFF switch for more than 10 seconds.**

If operation is not as specified, replace the actuator.
(i) Release the switch, then release the brake pedal.

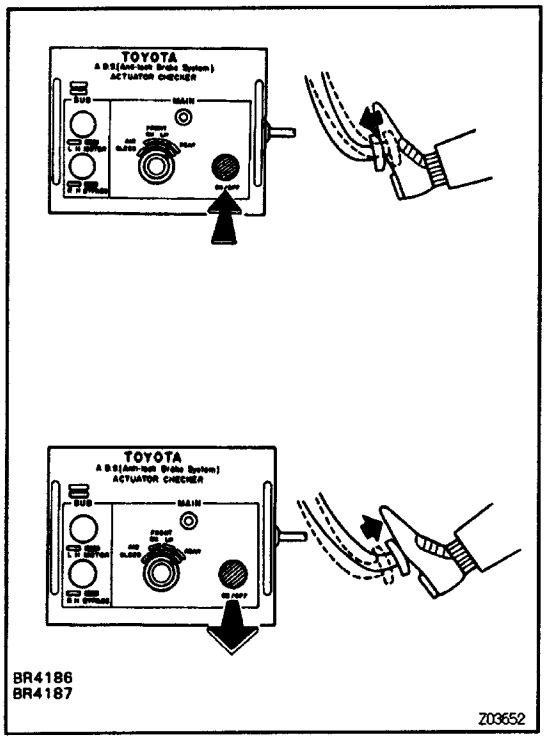

5. REMOVE ACTUATOR CHECKER (SST)

Remove SST, then connect the connectors of the actuator and solenoid relay.

SST 09990–00150 and 09990–00205

6. REMOVE SST FROM WHEEL CYLINDER

SST 09709–29017

7. REMOVE PRESSURE GAUGE FROM PS PUMP

Remove the pressure gauge from the PS line, then bleed the power steering system.

8. BLEED SYSTEM

(a) Fill brake reservoir with brake fluid.

(b) Fill PS reservoir with fluid.

Fluid type:

ATF DEXRON® II

(c) Bleed the system.

(See page BR–64)

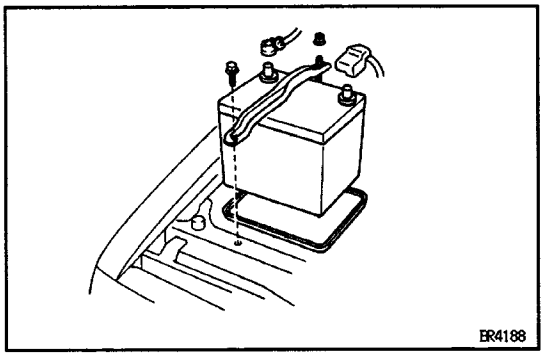

ABS ACTUATOR REMOVAL

1. REMOVE BATTERY

Disconnect the wire harnesses from the terminals and remove the battery and tray.

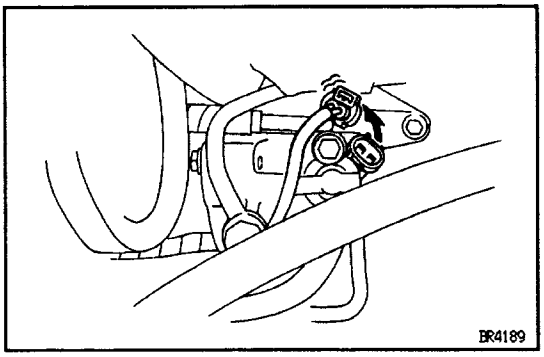

2. DISCONNECT CONNECTOR

Disconnect the connector from the actuator.

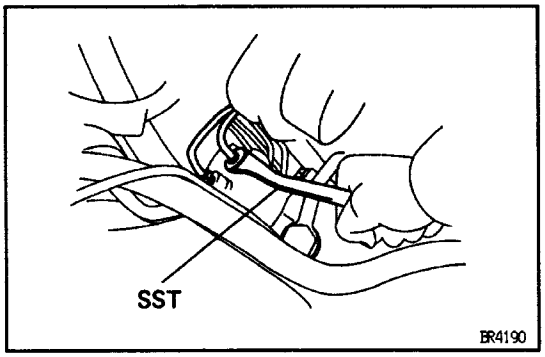

3. DISCONNECT BRAKE LINES

Using SST, disconnect the 2 brake lines.

SST 09751– 36011

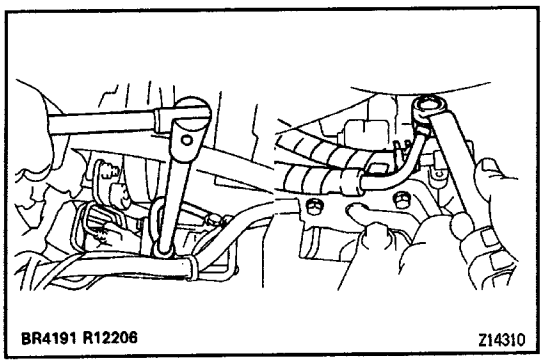

4. DISCONNECT POWER STEERING HOSES FROM ACTUATOR

HINT: Turn the steering wheel clockwise until it locks before disconnecting the PS hoses. If you cannot work from the upper side, work from the wheel house.

(a) Remove the 2 union bolts and disconnect the 2 power steering pressure hoses.

(b) 22R–E Engine:
Disconnect the power steering hose.

(c) 3VZ–E Engine:
Disconnect the 2 power steering hoses.

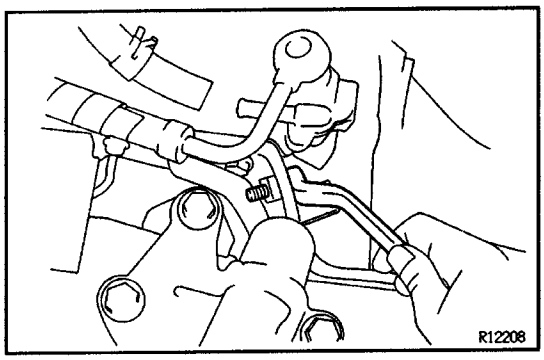

5. REMOVE PS HOSE CLAMP INSTALLATION BOLT

Remove the installation bolt of the power steering hose clamp.

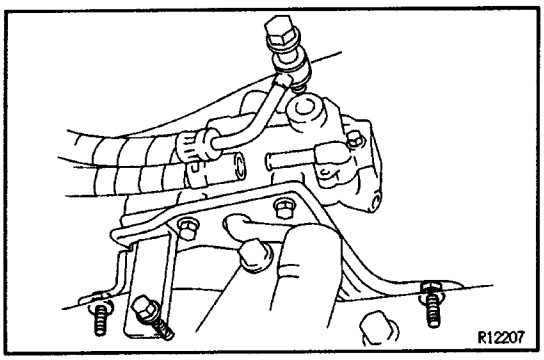

6. REMOVE ACTUATOR

Remove the 3 bolts, and remove the actuator from the wheel house.

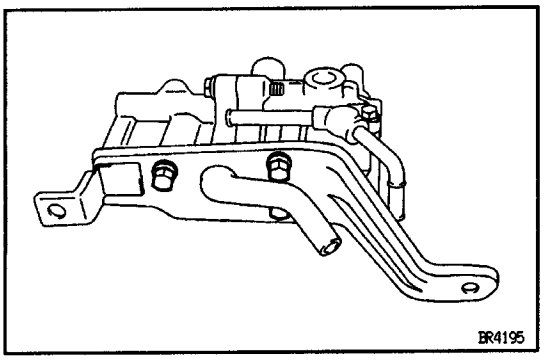

7. REMOVE BRACKET FROM ACTUATOR

Remove the 3 bolts, and separate the actuator and bracket.

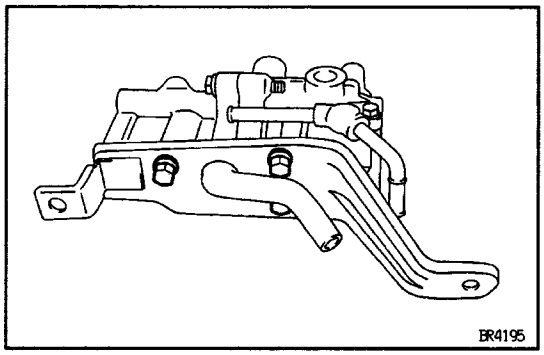

ABS ACTUATOR INSTALLATION

1. INSTALL BRACKET TO ACTUATOR

Install the bracket to the actuator with the 3 bolts.

Torque: 13 N–m (130 kgf–cm, 9 ft–lbf)

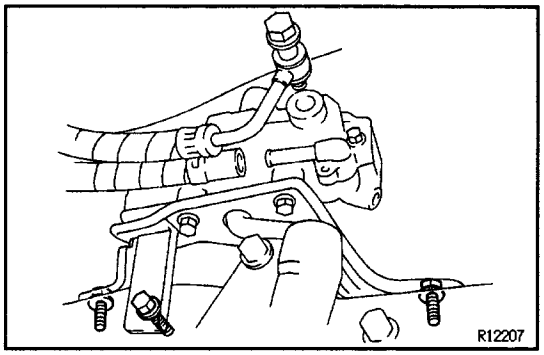

2. INSTALL ACTUATOR

Install the actuator in place and tighten the 3 bolts.

Torque: 28 N–m (290 kgf–cm, 21 ft–lbf)

HINT: Install the bolts in the following order:

(1) Front side bolt

(2) Wheel house side bolt of rear bolts

(3) Upper side bolt on frame of rear bolts

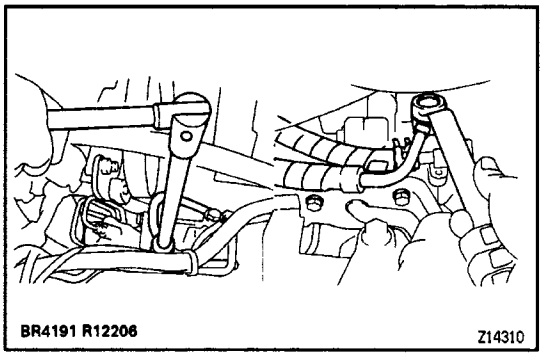

3. CONNECT POWER STEERING LINES

(a) Set the pressure union and new gaskets in place, then install the union bolt.

Torque: 47 N–m (475 kgf–cm, 34 ft–lbf)

(b) Similarly connect the other pressure hose.

(c) Connect the PS hose to the actuator, then fix it with the hose clamp.

(d) 3VZ–E Engine:

Similarly connect the other PS line hose.

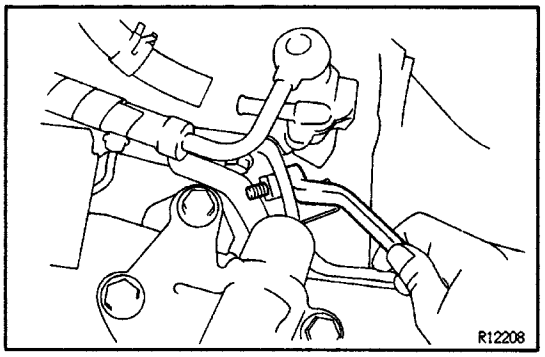

4. INSTALL PS TUBE CLAMP

Install the PS pressure hose clamp in place and tighten the bolt.

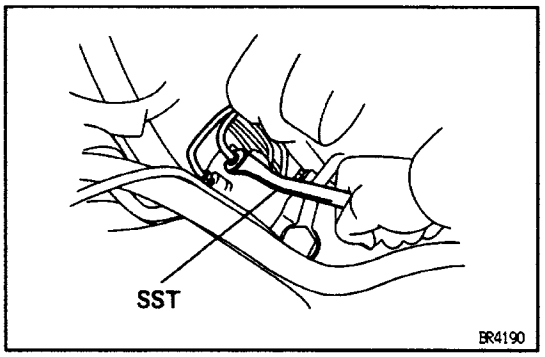

5. CONNECT BRAKE LINES

Using SST, connect the 2 brake lines to the actuator.

SST 09751 – 36011

Torque: 15 N–m (155 kgf–cm, 11 ft–lbf)

HINT: Connect the painted brake line to the painted hole of the actuator, then connect the 2nd brake line.

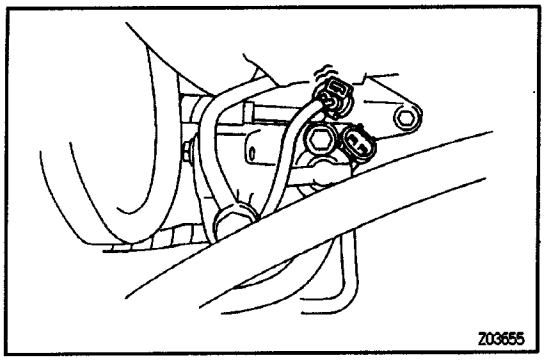

6. CONNECT CONNECTOR

Connect the connector to the actuator.

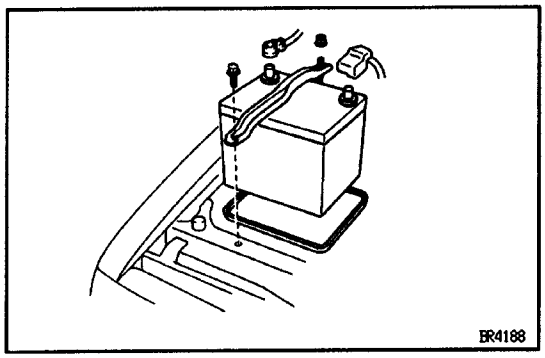

7. INSTALL BATTERY

Install the tray and battery in place, then connect the wire harnesses to the terminals.

8. BLEED SYSTEM

(a) Fill brake reservoir with brake fluid.

(b) Fill PS reservoir with fluid.

Fluid type:

ATF DEXRON®II

(c) Bleed the system

(See page BR–64)

REAR–WHEEL ANTI–LOCK BRAKE SYSTEM BLEEDING

HINT: Whenever PS hoses or PS pressure tube are disconnected or actuator is removed from the vehicle, the Rear–Wheel Anti–Lock Brake System should be bled in the following procedure.

At the other times, use the conventional procedure.

1. BLEED POWER STEERING SYSTEM

(See page SR–31)

2. BLEED BRAKE SYSTEM

(a) Bleed the system with the engine running.

(b) Bleed the system with the engine OFF.

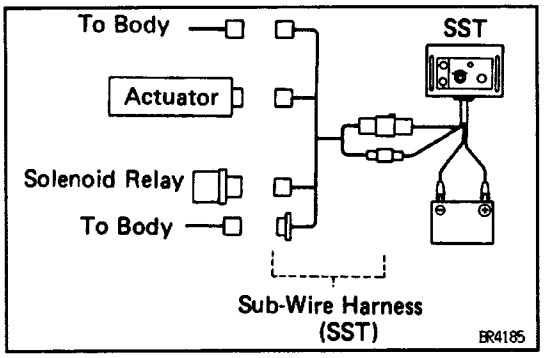

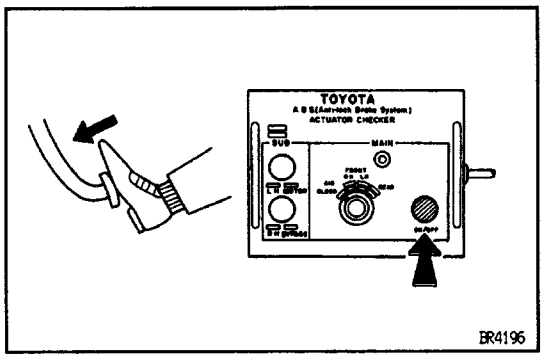

3. BLEED POWER STEERING SYSTEM AGAIN

(a) Disconnect the connector from the actuator.

(b) Disconnect the connector from the solenoid relay.

(c) Connect the actuator checker (SST) to the actuator, solenoid relay and body side wire harness through the sub–wire harness (SST), as shown.
SST 09990–00150 and 09990–00205

(d) Connect the red cable of the checker to the battery positive (+) terminal and black to the negative (–) terminal.

(e) Start the engine, and run it at idle.

(f) Turn the selector switch of actuator checker to ”AIR BLEED” position.

(g) Strongly depress the brake pedal and hold it.

(h) Push on and release the ON/OFF switch 5 times during 3 seconds.

NOTICE:

- **To avoid damaging the master cylinder piston cup, do not push 33T switch ’ON’ before depressing the brake pedal and do not release your foot from the brake pedal while SST switch: pushed on.**
- **Do not keep pushing the ON/OFF switch for more than 10 seconds.**

(i) Release the switch, then release the brake pedal.

(j) Check the PS and brake fluid level, add fluid if necessary.

(k) Remove SST, then connect the connectors of the actuator and solenoid relay.
SST 09990–00150 and 09990–00205

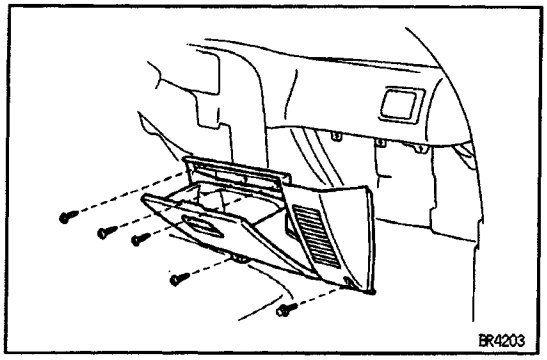

ANTI–LOCK BRAKE SYSTEM CIRCUIT

ECU REMOVAL

1. REMOVE GLOVE BOX ASSEMBLY

Remove the 4 screws and a bolt, then remove the glove box assembly and disconnect the radio speaker connector.

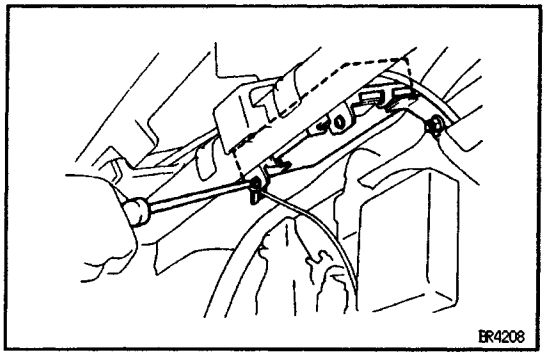

2. REMOVE ECU

(a) Remove the 2 screws and a nut.
(b) Pullout the ECU.

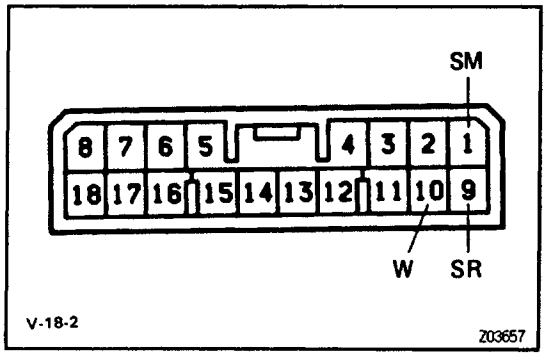

SYSTEM CIRCUIT INSPECTION

1. INSPECT SYSTEM CIRCUIT WITH CONNECTOR CONNECTED

Using a voltmeter with high impedance (10 kΩ/V minimum), measure the voltage at each terminal and body ground.

Tester Connection	Condition	Voltage	Trouble Part
SM — Body ground	Ignition switch ON	Battery positive voltage	Solenoid relay, Actuator
	Ignition switch ON and ”REAR ANTILOCK” warning light goes on	About 0 V	
SR — Body ground	Ignition switch ON	Battery positive voltage	
	Ignition switch ON and ”REAR ANTLOCK” warning tight goes on	About 0 V	
W — Body ground	Ignition switch ON	Battery positive voltage	Warning light bulb
	Ignition switch ON and ”REAR ANTILOCK” warning light goes on	About 0 V	

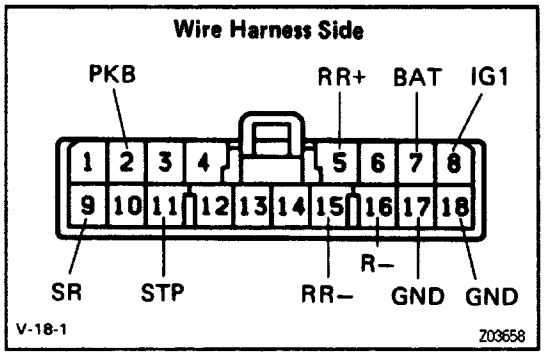

2. INSPECT SYSTEM CIRCUIT WITH CONNECTOR DISCONNECTED

(a) Disconnect the connector from the ECU and inspect at the wire harness side connector.

If the circuit is not as specified, check and repair or replace the trouble part shown in the table above.

(b) Connect the connector.

Tester Connection	Check Item	Condition	Voltage or Resistance Value	Trouble Part
PKB – Body ground	Voltage	Ignition SW ON and PKB lever pulled	About 0 V	PKB switch, level warning switch
		Ignition SW ON and PKB lever returned	Battery positive voltage	
RR + – RR–	Resistance	–	580 – 700 Ω	Speed sensor
BAT – Body ground	Voltage	–	Battery positive voltage	Wire harness
IG1 – Body ground	Voltage	Ignition SW ON	Battery positive voltage	ECU–IG fuse, wire harness
		Ignition SW OFF	About 0 V	
SR – R–	Resistance	–	80 Ω	Solenoid relay
STP – Body ground	Voltage	Ignition SW OFF and brake pedal depressed	Battery positive voltage	Stop light switch, stop light
	Continuity	Ignition SW OFF and brake pedal returned	Continuity	
GND – Body ground	Continuity	–	Continuity	Wire harness

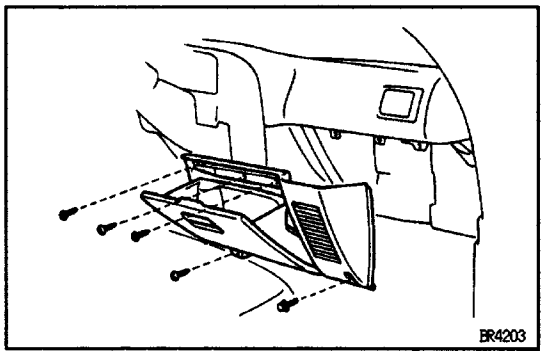

ECU INSTALLATION

1. INSTALL ECU

Install the ECU in place with a nut and 2 screws.

2. INSTALL GLOVE BOX ASSEMBLY

Connect the radio speaker connector and install the glove box assembly in place and install the 4 screws and a bolt.

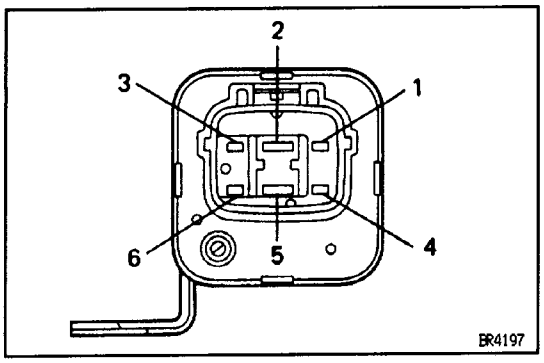

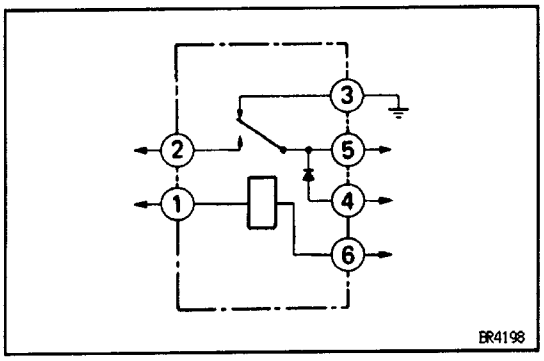

CONTROL RELAY

SOLENOID RELAY INSPECTION

INSPECT SOLENOID RELAY OPERATION

Inspect the relay continuity between terminals.

Terminal / Condition	6	1	2	3	5	4
Constant	○—○			○	○—⊣◂—○	
Apply battery positive voltage between terminals 1 and 6			○		○—⊣◂—○	

If relay operation is not as specified, replace the solenoid relay.

DECELERATION SENSOR

COMPONENTS

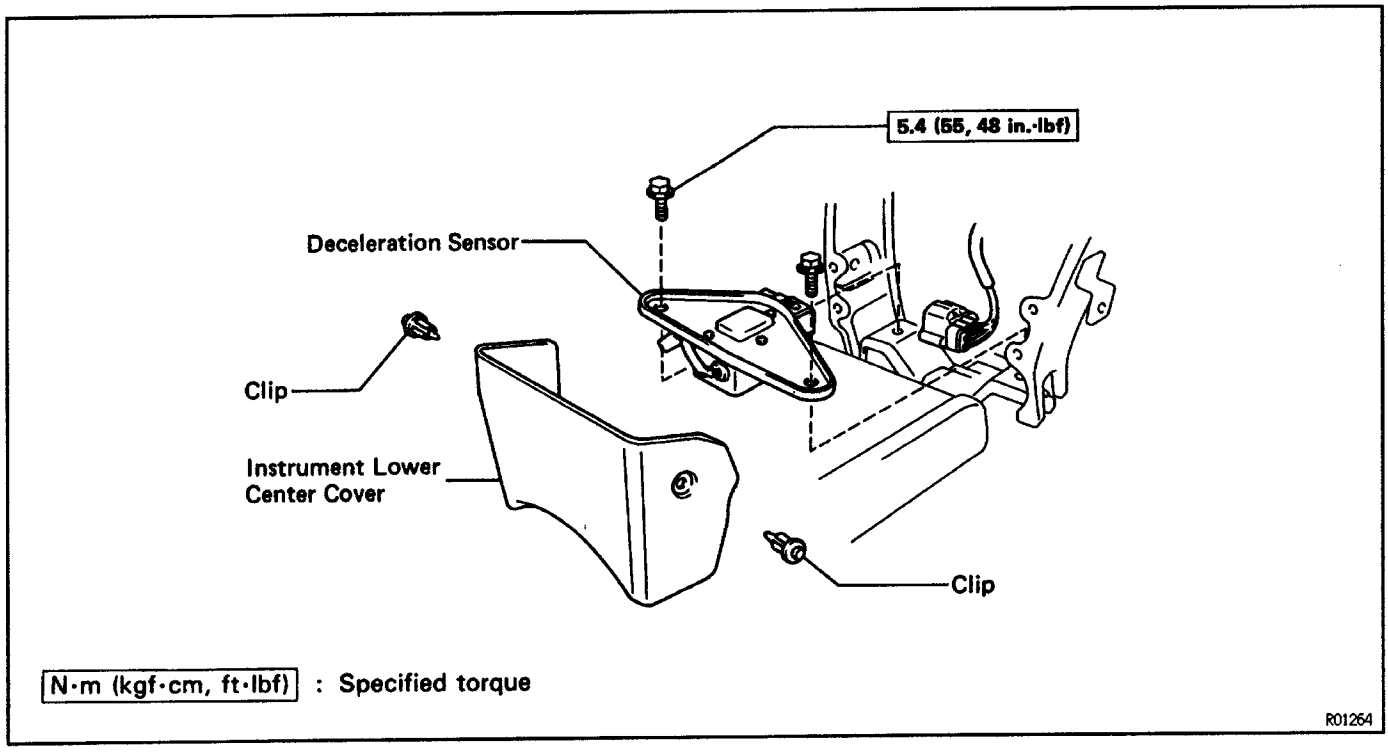

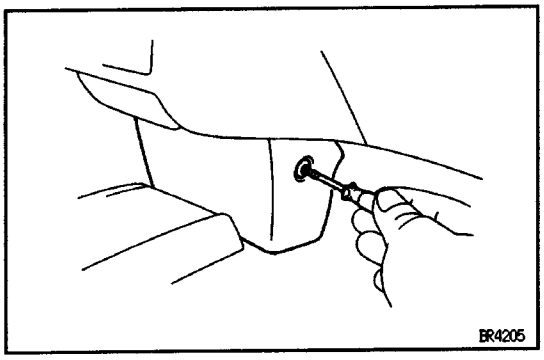

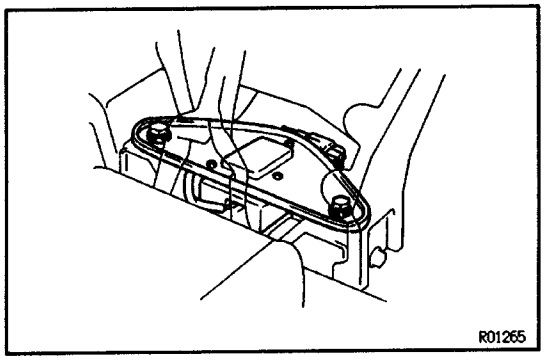

DECELERATION SENSOR INSPECTION

INSPECT SENSOR INSTALLATION

(a) Remove the 2 clips, then remove the instrument lower center cover.

(b) Inspect that the sensor direction is correct.

(c) Check that the sensor installation bolts are tightened properly.

If not, tighten the bolts.

Torque: 5.4 N–m (55 kgf–cm, 48 in.–lbf)

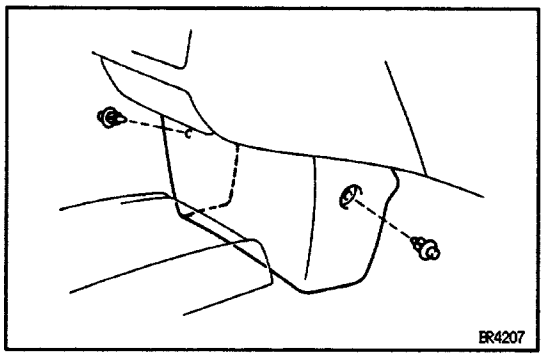

(d) Install the instrument lower center cover and 2 clips.

DECELERATION SENSOR AND SPEED SENSOR DIAGNOSIS SYSTEM

DIAGNOSIS SYSTEM INSPECTION

PRECAUTION

While checking the deceleration sensor and speed sensor diagnosis system, the Rear – Wheel Anti – Lock Brake System does not work and brake system works as a normal brake system.

1. INSPECT BATTERY POSITIVE VOLTAGE

Inspect that the battery positive voltage is 10 – 14 V.

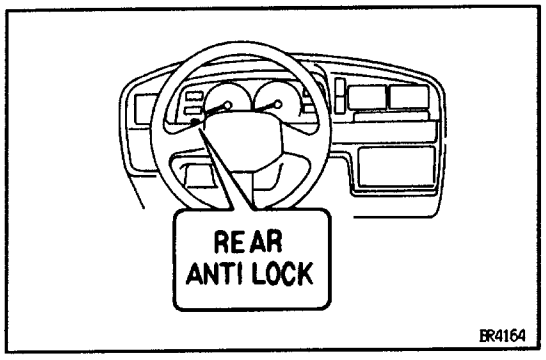

2. CHECK THAT WARNING LIGHT TURNS ON

(a) Turn the ignition switch ON.

(b) Check that the "REAR ANTI–LOCK" warning light turns on for about 3 seconds.

If not, inspect and repair or replace the fuse, bulb and wire harness.

(c) Check that the "REAR ANTI–LOCK" warning light turns off.

(d) Turn the ignition switch OFF.

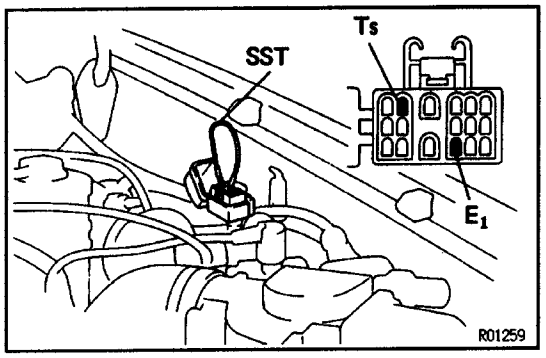

3. DO THE FOLLOWING STEPS

(a) Using SST, connect the terminal Ts and E1 of the data link connector 1.

SST 09843–18020

(b) Start the engine.

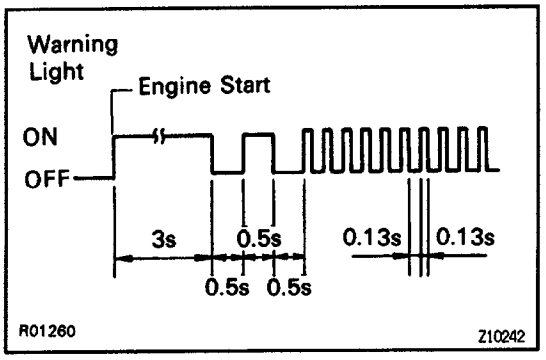

(c) 2 WD:

Check that the warning light blinks about 4 times every 1 second after blinking 1 time in 1.5 seconds, as shown.

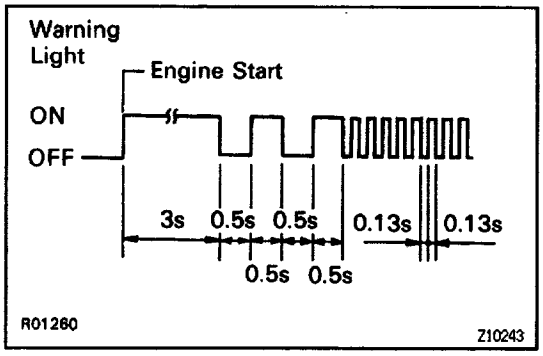

(d) 4WD:
Check that the warning light blinks about 4 times every 1 second after blinking 2 times in 2.0 seconds, as shown.

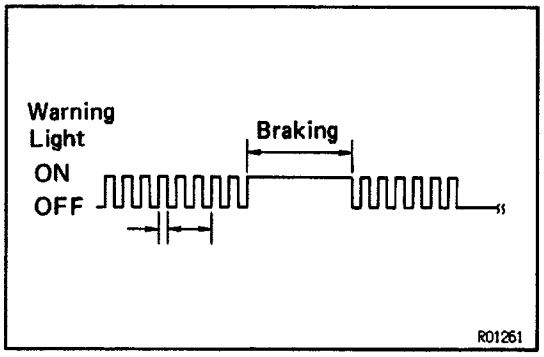

(e) Drive the vehicle straight ahead at about 20 km/h (12.4 mph) or more, depress the brake pedal strongly.
(f) Check that the warning light turns on while braking.

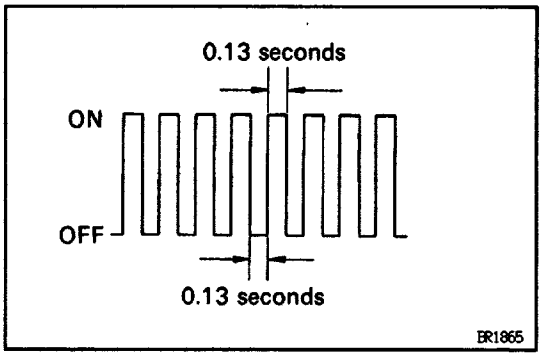

(g) Drive the vehicle straight ahead at about 50/km (31 mph) or more, and stop the vehicle.
(h) Check that the warning light blinks about 4 times every 1 second, as shown.

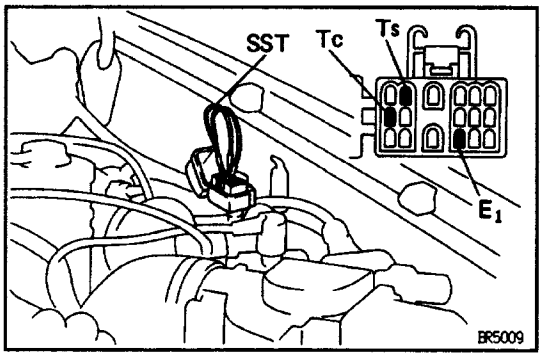

Using SST, connect terminals Tc and E1 of the data link connector 1.
SST 09843–18020

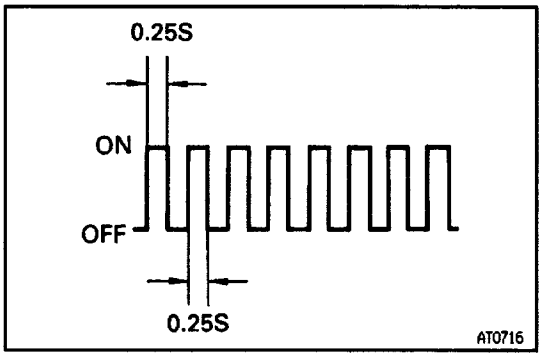

(j) Check that the warning light shows the normal code.

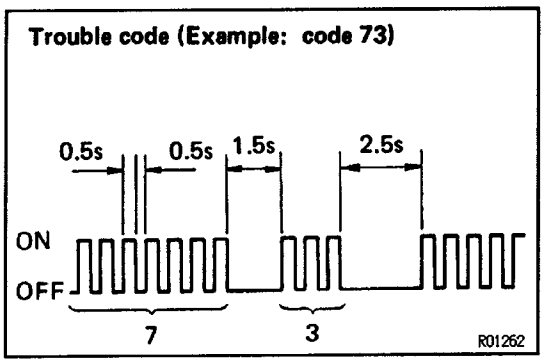

(k) In event of a malfunction, 2.5 seconds later the warning light will begin to blink. Read the number of blinks.
(See page **BR–56**)

HINT: The 1 st number of blinks will equal the 1 st digit of a 2 digit diagnostic trouble code. After a 1.5 seconds pause, the 2nd number of blinks will equal the 2nd number of a 2 digit code. If there are 2 or more codes, there will be a 2.5 seconds pause between each, and indication will begin after 2.5 seconds pause from the smaller value and continue in order to the larger value.

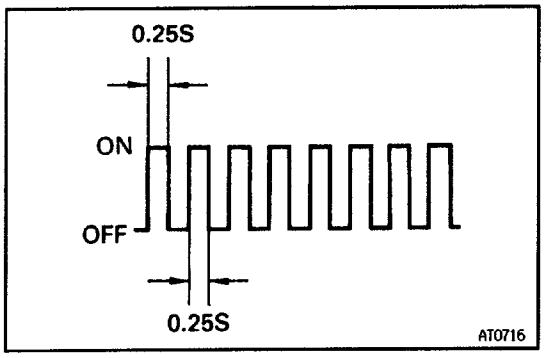

(l) If the system is operating normally (no malfunction), the warning light will blink once every 0.5 seconds.

(m) Repair the system.

(n) After the malfunctioning components has been repaired, clear the diagnostic trouble codes stored in the ECU.
(See page BR–46)

HINT: If you disconnect the battery cable while repairing, all diagnostic trouble codes in the ECU will erased.

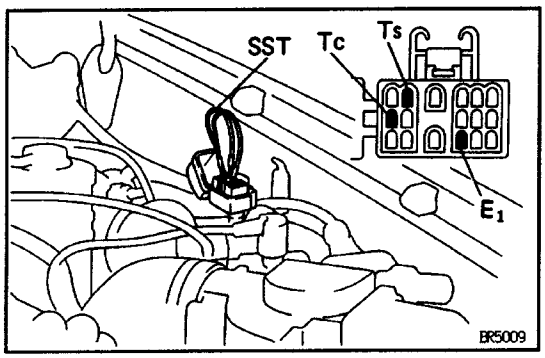

(o) Remove the SST from terminals Ts, Tc and E1 of the data link connector 1.
SST 09843–18020

DIAGNOSTIC TROUBLE CODE

Code No.	Light System	Diagnosis	Malfunctioning Part
	ON OFF 	Speed sensor and sensor rotor are normal	
73		Low output voltage of speed sensor signal	Speed sensor Sensor rotor (Differential ring gear)
77		Abnormal change of output voltage of speed sensor signal	Sensor rotor Differential ring gear)
79		Sticking of deceleration sensor pendulum	Deceleration sensor

REAR–WHEEL ANTI–LOCK BRAKE SYSTEM

DESCRIPTION

- The Rear–Wheel Anti–Lock Brake System controls the hydraulic pressure of the rear wheel cylinder during sudden braking on slippery road surfaces, preventing the rear wheels from locking.
- In case a malfunction occurs, a diagnosis function and fail–safe system have been adopted for the Rear–Wheel Anti–Lock Brake System, to increase serviceability.

SYSTEM COMPONENTS LOCATION

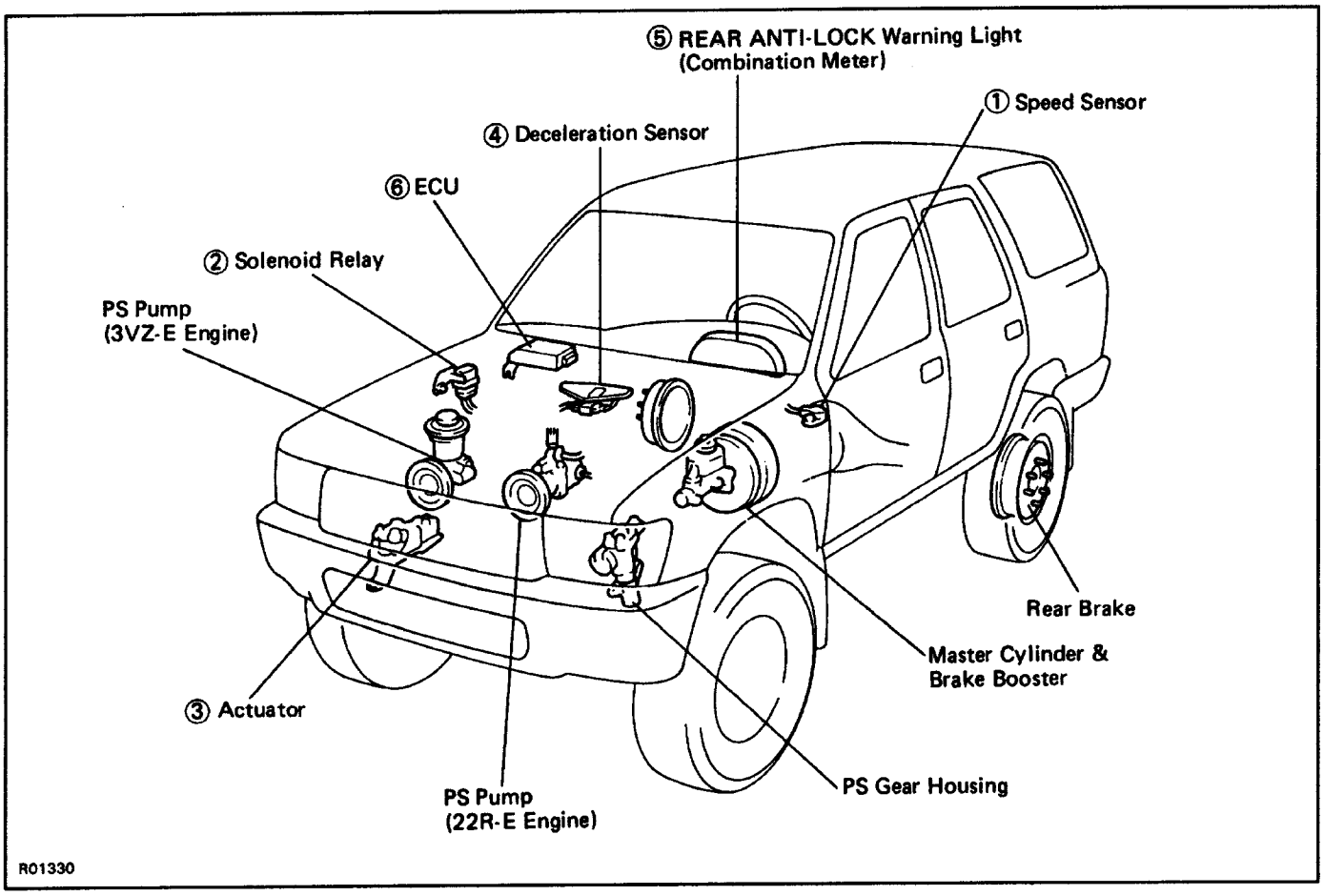

COMPONENTS FUNCTION

No.	Components	Function
1	Speed Sensor	Detects the wheel speed from the rotation of the rear differential ring gear.
2	Solenoid Relay	Supplies electric current to the solenoid valve of the actuator.
3	Actuator	Controls the brake fluid pressure to rear brake wheel cylinders through signals from the ECU.
4	Deceleration Sensor	Detects the vehicle deceleration rate from the deceleration of the body.
5	REAR ANTI–LOCK Warning Light	Lights up to alert the driver when trouble has occurred in the Rear–Wheel Anti–Lock Brake System.
6	ECU	According the wheel speed signals from the speed sensor and vehicle deceleration signals from the deceleration sensor, it calculates acceleration, deceleration and slip values and sends signals to the actuator to control brake fluid pressure.

WIRING DIAGRAM

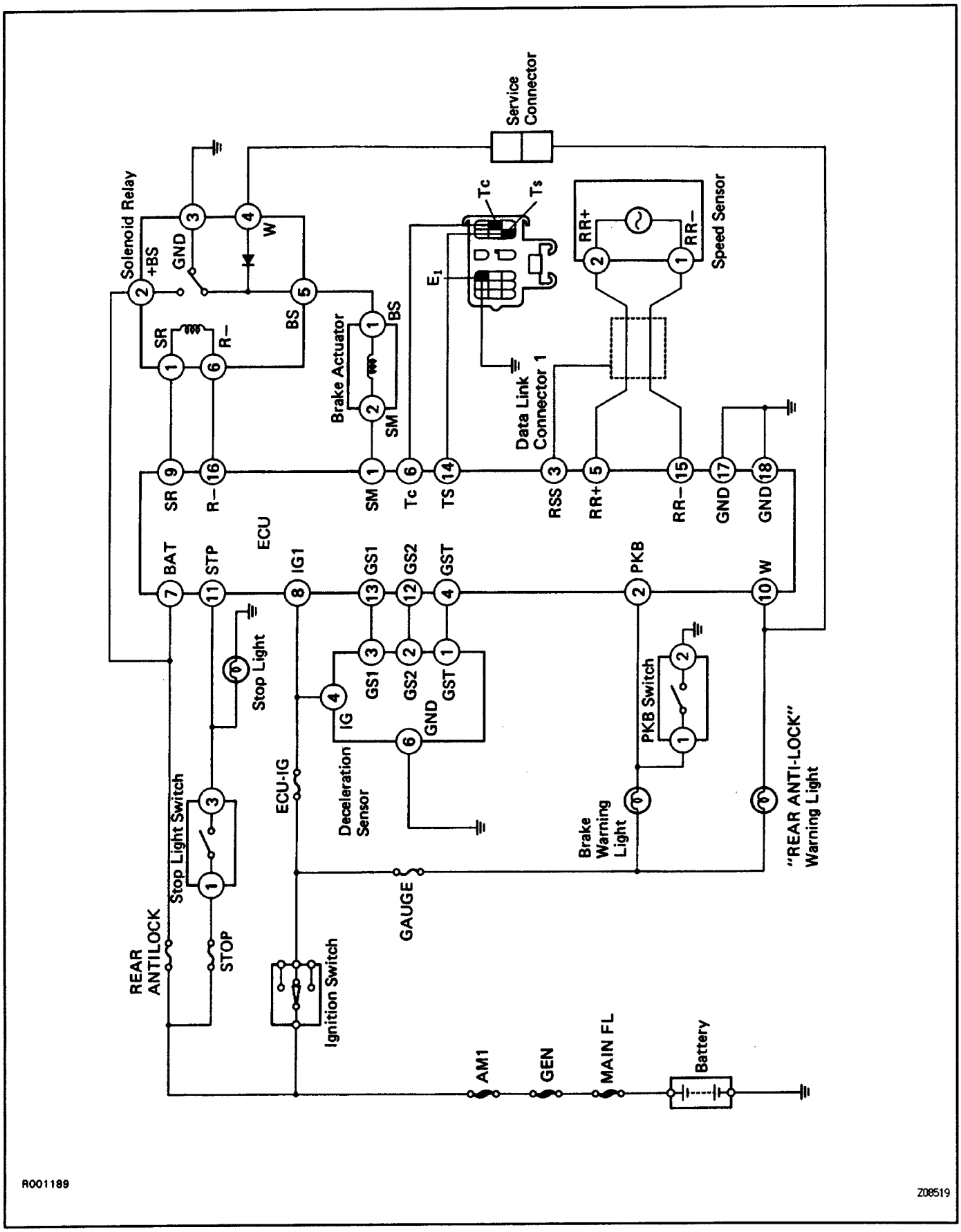

CONNECTORS

Stop Light Switch

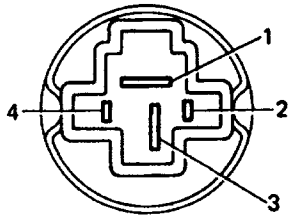

Solenoid Relay

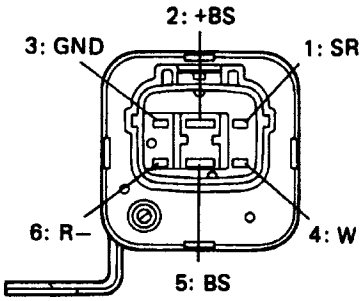

Brake Actuator

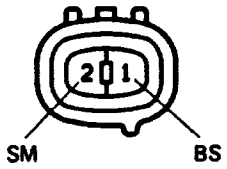

Deceleration Sensor

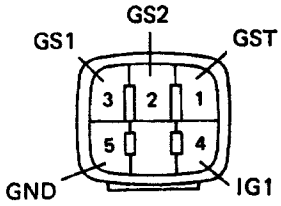

Parking Brake Switch

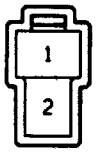

Data Link Connector 1

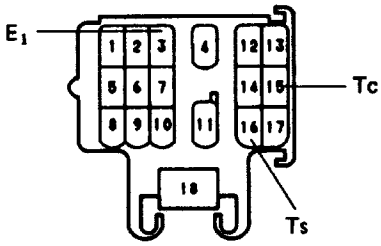

Service Connector

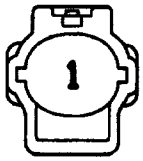

(Solenoid Relay Side)

Speed Sensor

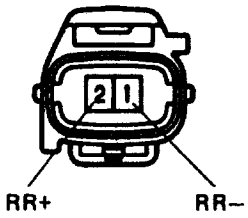

Rear-Wheel Anti-Lock Brake System ECU

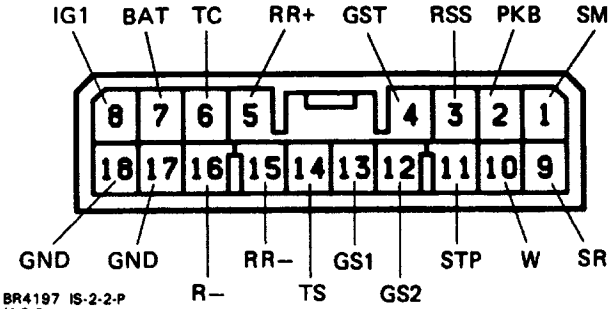

BE0336 BR4197 IS-2-2-P
R01331 H-2-2
SH-18-1 R01332 Ie-2-2-F
V-18-2

Z03649

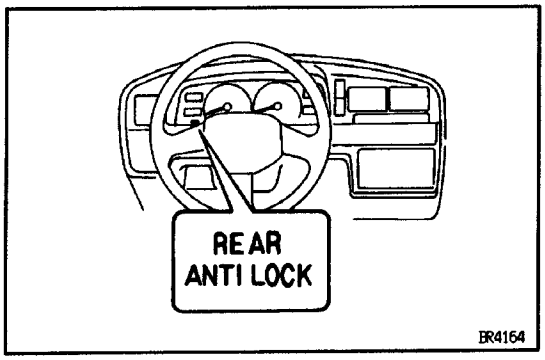

DIAGNOSIS SYSTEM

DESCRIPTION

If a functional malfunction occurs, diagnosis system will identify the problem and ECU stores the codes for the trouble items.

At the same time, the system informs the driver of a malfunction via the ”REAR ANTILOCK” warning light in the combination meter.

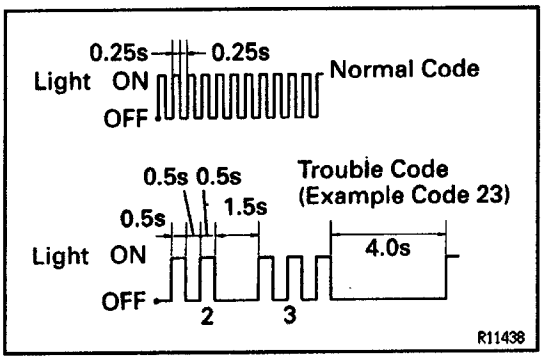

By turning ON the ignition switch and disconnecting the service connector, the trouble can be identified by the number of blinks (diagnostic trouble code) of the warning light.

In event of 2 codes, that having the smallest number (code) will be identified 1st.

HINT: The warning light does not show the diagnostic trouble codes while the vehicle is running.

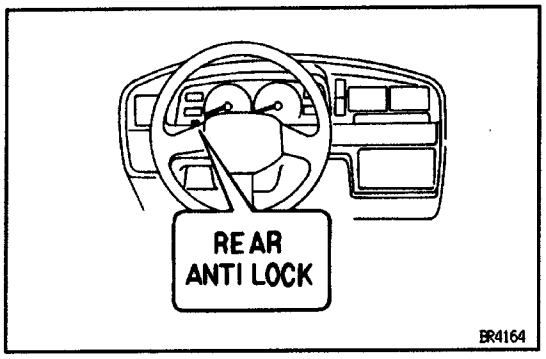

DIAGNOSIS SYSTEM INSPECTION

1. INSPECT BATTERY POSITIVE VOLTAGE

Inspect that the battery positive voltage is 10–14 V.

2. CHECK THAT WARNING LIGHT TURNS ON

(a) Turn the ignition switch ON.

(b) Check that the ”REAR ANTI LOCK’ warning light turns on for about 3 seconds.

If not, inspect and repair or replace the fuse, bulb and wire harness.

3. READ DIAGNOSTIC TROUBLE CODE

(a) Turn the ignition switch ON.

(b) Disconnect the service connector.

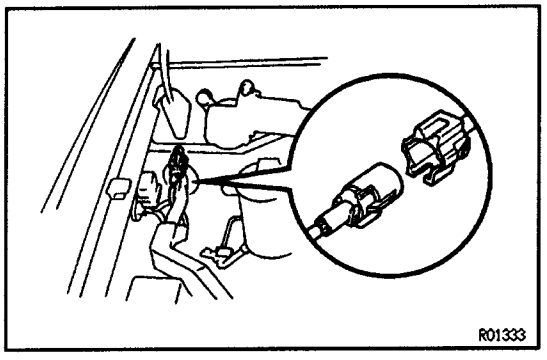

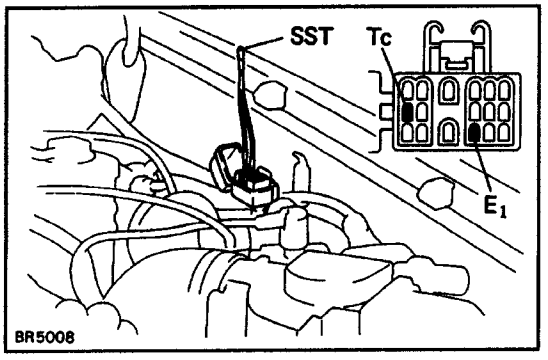

(c) Using SST, connect the terminal Tc and E1 of the data link connector 1.

SST 09843–18020

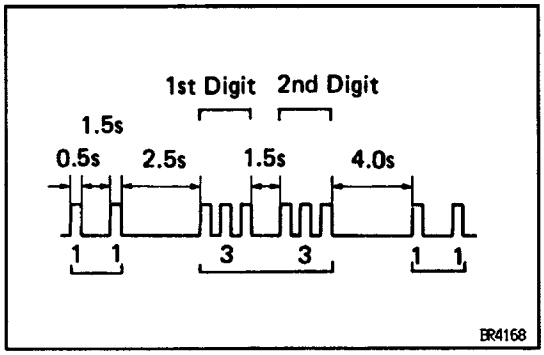

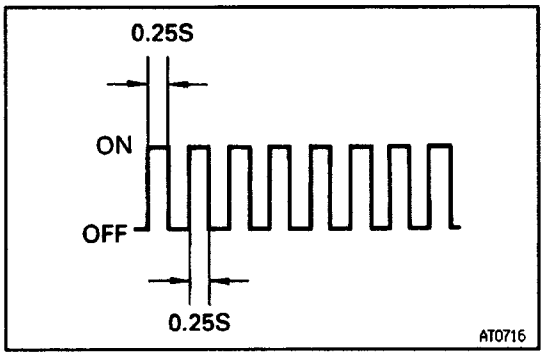

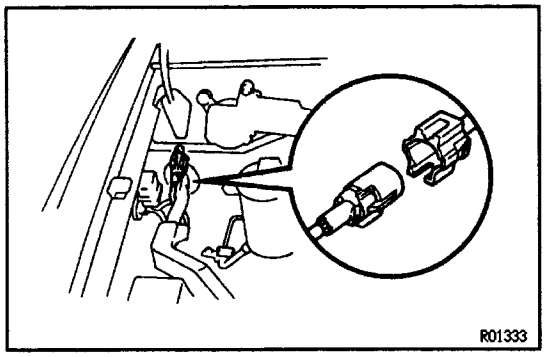

(d) In event of a malfunction, 4 seconds later the warning light will begin to blink. Read the number of blinks. (See DIAGNOSTIC TROUBLE CODE)

HINT: The 1 st number of blinks will equal the 1 st digit of a 2 digit diagnostic trouble code. After a 1.5 seconds pause, the 2nd number of blinks will equal the 2nd number of a 2 digit code. If there are 2 or more codes, there will be a 2.5 seconds pause between each, and indication will begin after 4.0 seconds pause from the smaller value and continue in order to the larger value.

(e) (f the system is operating normally (no malfunction), the warning light will blink 2 times per second.

(f) Repair the malfunctioning parts.

(g) After the malfunctioning parts have been repaired, clear the diagnostic trouble codes stored in the ECU. (See page BR–46)

HINT: If you disconnect the battery cable while repair–ing, all diagnostic trouble codes in the ECU will erased.

(h) Disconnect the terminal Tc and E1 of the data link connector 1.

(i) Connect the service connector.

(j) Turn the ignition switch ON, and check that the ”REAR ANTILOCK” warning light goes off after the warning light goes on for about 2 seconds.

DIAGNOSTIC TROUBLE CODE

HINT: Using SST 09843–18020, connect the terminals Tc and E1, and disconnect the service connector.

Code No.	Light Pattern	Diagnosis	Trouble Part
11		Open circuit in solenoid relay circuit or solenoid circuit	• Solenoid • Solenoid relay • Wire harness and connector of solenoid and/or solenoid relay circuit
12		Short circuit in solenoid relay circuit	
25		Short circuit in solenoid circuit	
33		Open or short circuit in speed sensor circuit	• Speed sensor • Wire harness and connector of speed sensor circuit
41	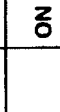	Low battery positive voltage (9.5 V or lower)	• Battery
42		Abnormally high battery positive voltage (17 V or higher)	
43		Mechanical malfunction in deceleration sensor	• Deceleration sensor • Wire harness and connector of deceleration sensor circuit
44		Electrical malfunction in deceleration sensor circuit	
Always ON	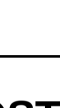	Malfunction in ECU	• ECU

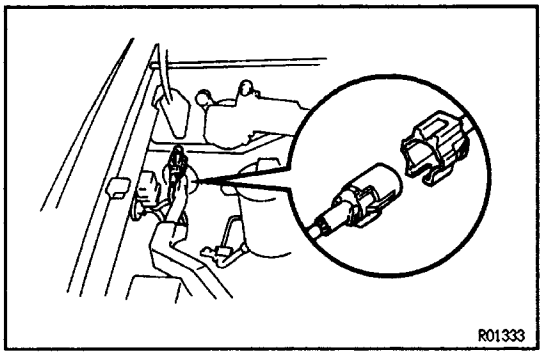

DIAGNOSTIC TROUBLE CODES CLEARING

CLEAR DIAGNOSTIC TROUBLE CODES

(a) Turn the ignition switch ON.

(b) Disconnect the service connector.

HINT: Keep the vehicle stationary.

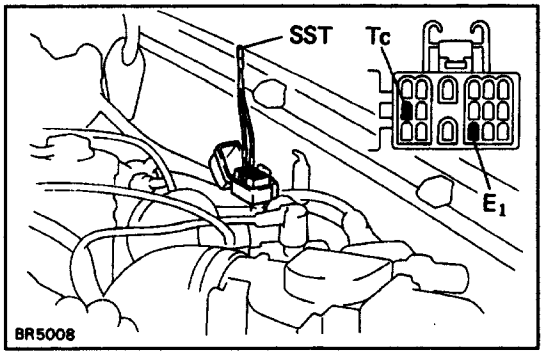

(c) Using SST, connect the terminal Tc and E1 of the data link connector 1.

SST 09843–18020

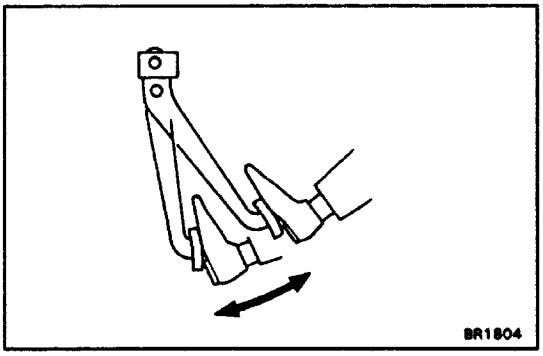

(d) Clear the diagnostic trouble codes stored in ECU by depressing the brake pedal 8 or more times within 3 seconds.

HINT: Cancellation can also be done by removing the REAR – ANTI LOCK fuse, but in this case, other memory systems will also be cancelled out.

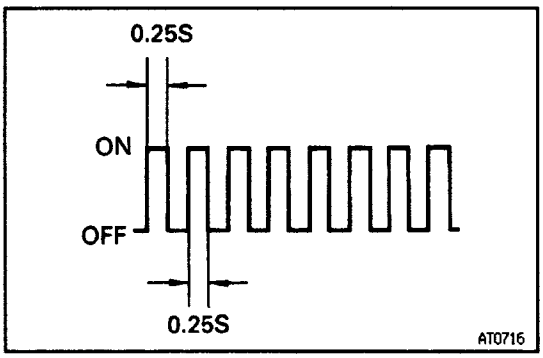

(e) Check that the warning light shows the normal code. If the warning light still shows the diagnostic trouble codes, check the cause and repair or replace the trouble parts, then clear the diagnostic trouble codes again.

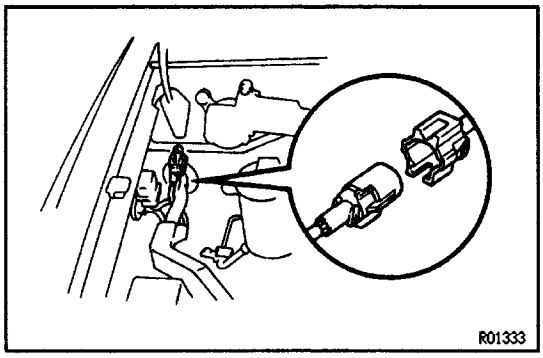

(f) Connect the service connector.

(g) Disconnect the terminal Tc and E1 of the data link connector 1.

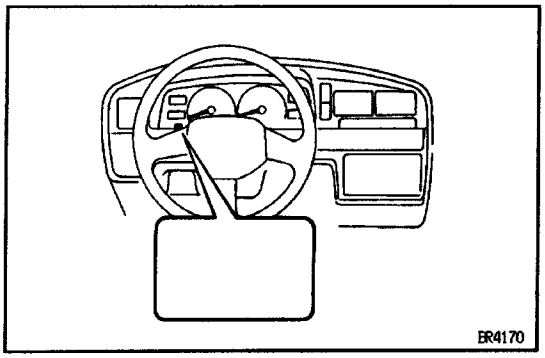

(h) Check that the warning light goes off.

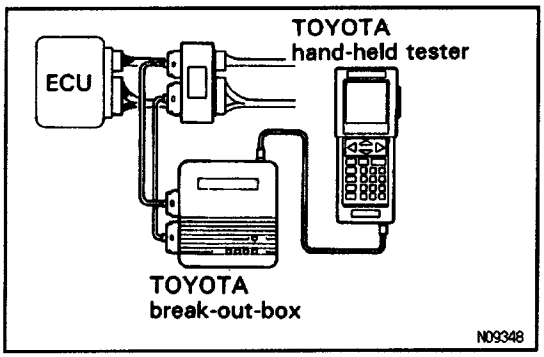

ECU TERMINAL VALUES MEASUREMENT USING TOYOTA BREAK–OUT–BOX AND TOYOTA HAND–HELD TESTER

1. Hookup the TOYOTA hand–held tester and TOYOTA break–out–box to the vehicle.
2. Read the ECU input/output values by following the prompts on the tester screen.
   HINT: TOYOTA hand–held tester has a ”Snapshot’ function. This records the measured values and is effective in the diagnosis of intermittent problems.
   Please refer to the TOYOTA hand – held tester / TOYOTA break–out–box operators manual for further details.

TROUBLESHOOTING

Problem		No.
”REAR ANTILOCK” warning light	Always comes on after ignition switched ON.	1
	Does not come on for about 3 seconds after ignition switched ON.	2
	Comes on and off.	3
	Comes on while running.	1
Brake working	Brakes pull.	4
	Braking inefficient.	4
	Rear–Wheel Anti–Lock Brake System operates during normal braking.	4
	Rear–Wheel Anti–Lock Brake System operates just before stopping during normal braking.	4
	Brake pedal pulsates abnormally while Rear–Wheel Anti–Lock Brake System is operating.	4
	Skidding noise occurs while Rear–Wheel Anti–Lock Brake System working. (Rear–Wheel Anti–Lock Brake System works inefficiently)	5

1 ”REAR ANTILOCK” warning light comes on.

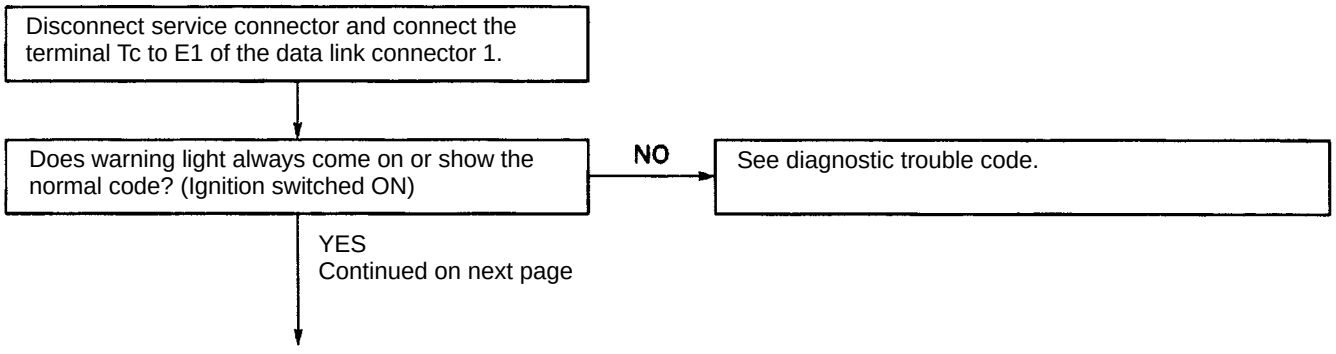

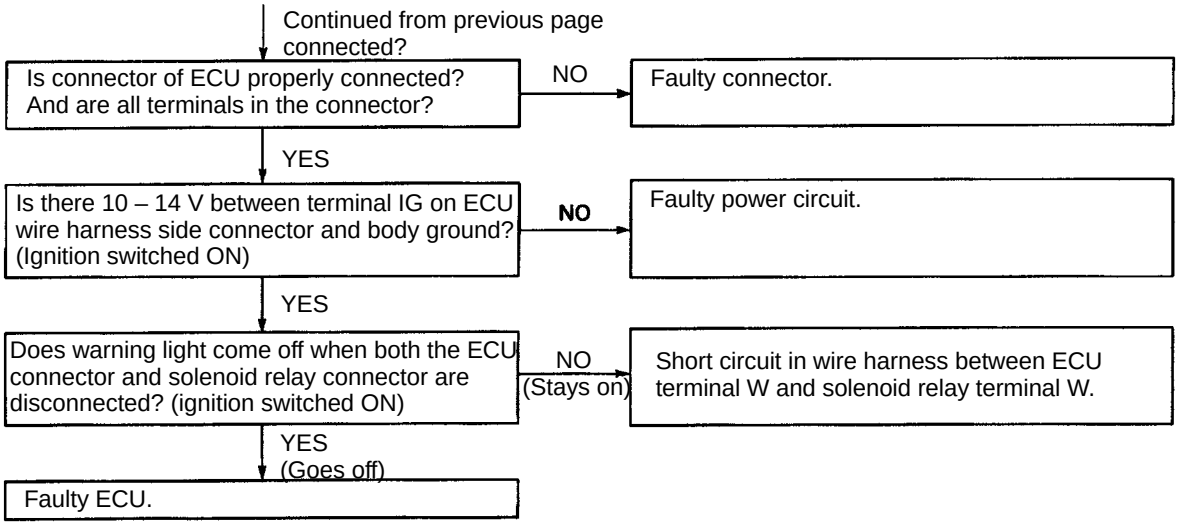

2 **”REAR ANTILOCK” warning light does not come on for about 2 seconds after ignition switched ON.**

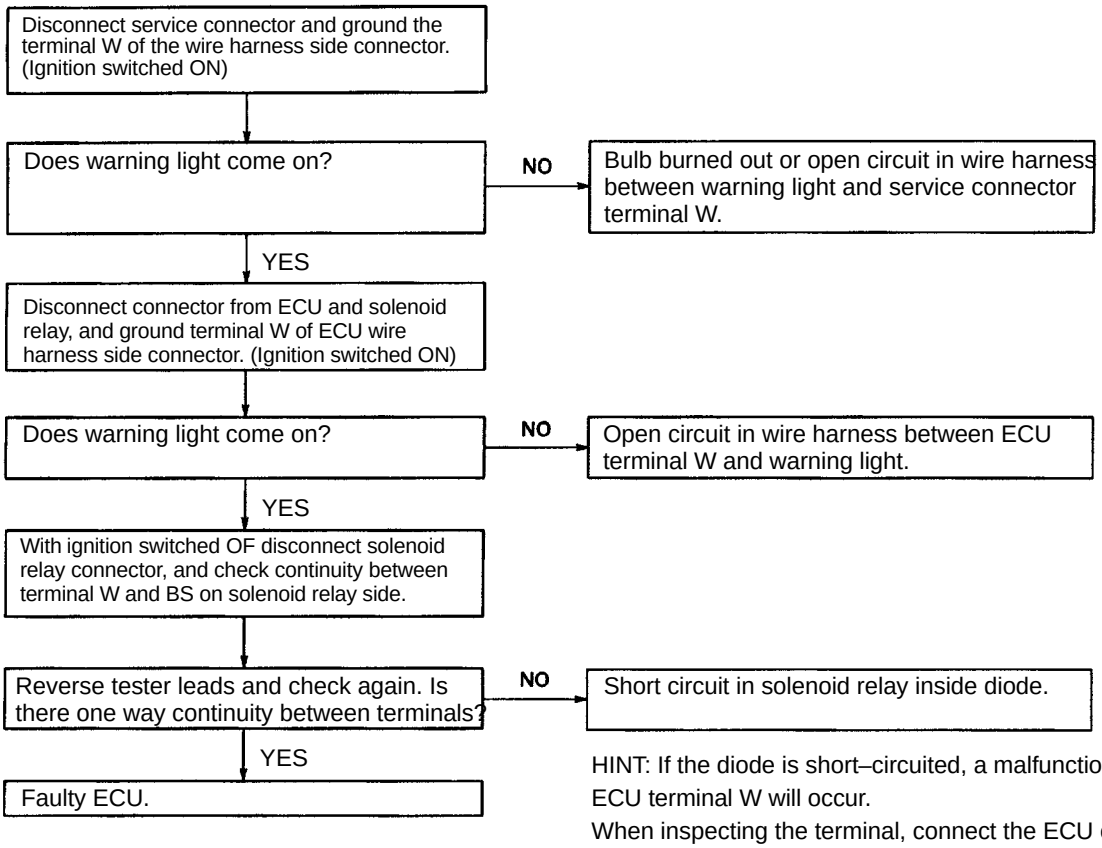

HINT: If the diode is short–circuited, a malfunction at ECU terminal W will occur.
When inspecting the terminal, connect the ECU connector and disconnect solenoid relay connector. Then turn the ignition switched ON, and check that the warning light goes on. If it does, the ECU terminal is OK.

3	**”REAR ANTILOCK” waring light comes on and off.**

- Short circuit in wire harness between ECU terminal TS and data link connector 1 terminal.
- Short circuit in wire harness between ECU terminal TC and data link connector 1 terminal.

4	• **Braking inefficient.** • **Rear–Wheel Anti–Lock Brake System operates during normal braking.** • **Rear–Wheel Anti–Lock Brake System operates just before stopping during normal braking.** • **Brake pedal pulsates abnormally while Rear–Wheel Anti–Lock Brake System working.**

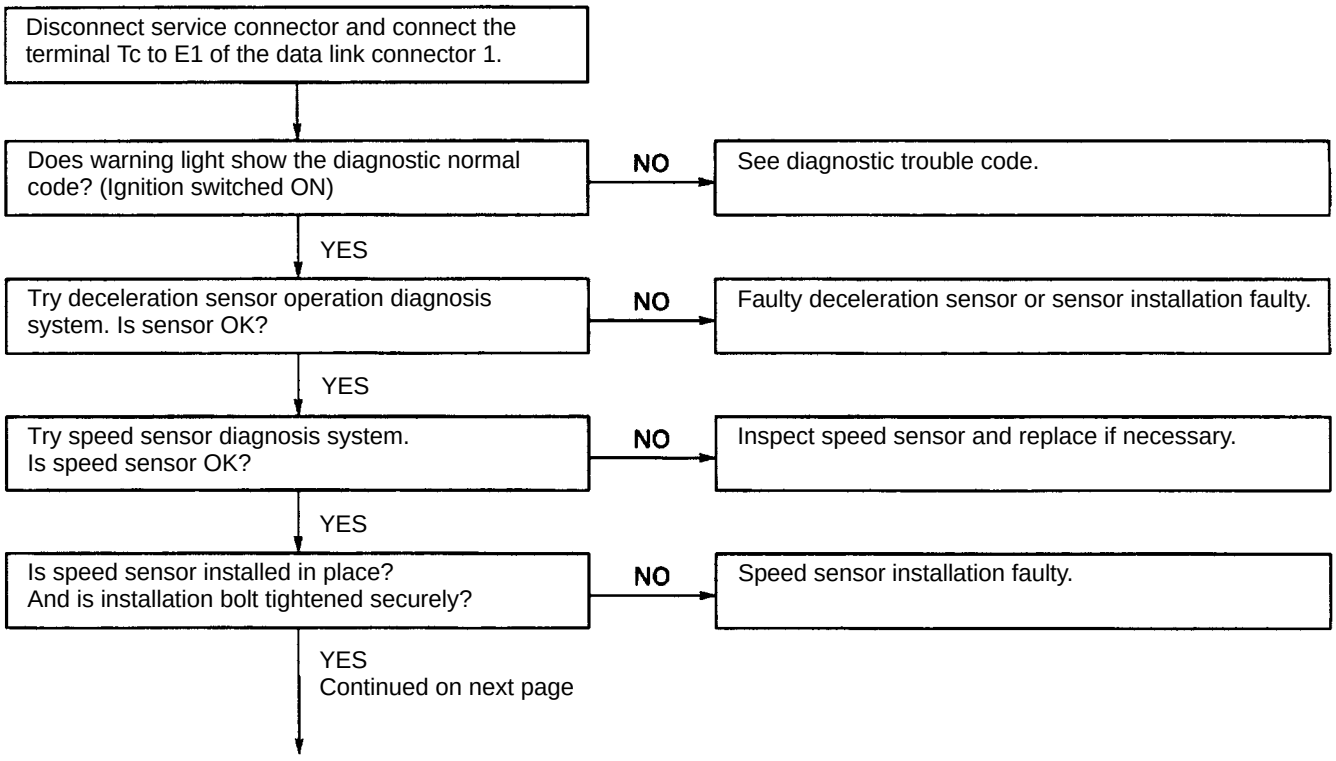

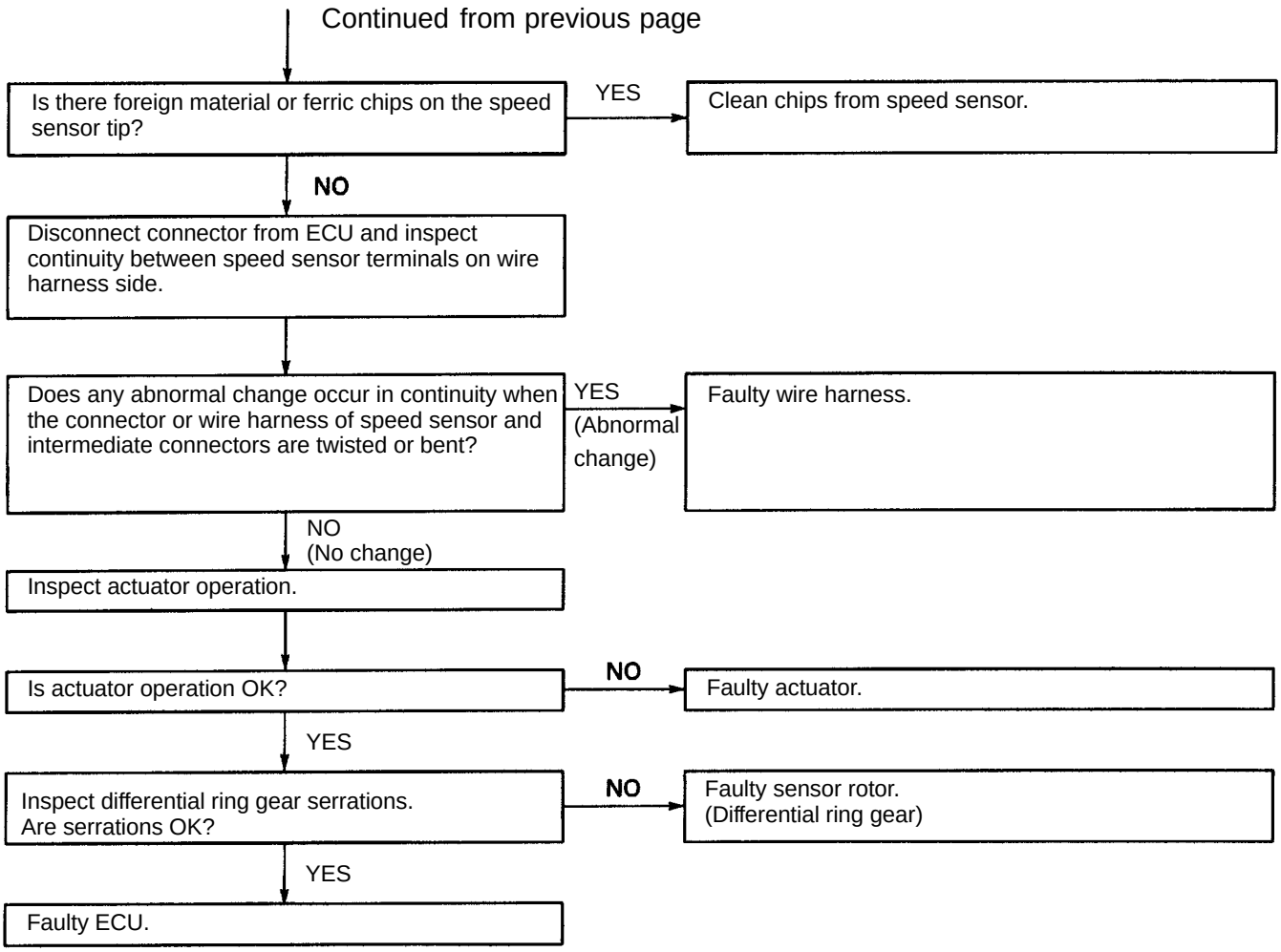
Continued from previous page
Is there foreign material or ferric chips on the speed sensor tip?
YES
Clean chips from speed sensor.
NO
Disconnect connector from ECU and inspect continuity between speed sensor terminals on wire harness side.
Does any abnormal change occur in continuity when the connector or wire harness of speed sensor and intermediate connectors are twisted or bent?
YES
(Abnormal change)
Faulty wire harness.
NO
(No change)
Inspect actuator operation.
Is actuator operation OK?
NO
Faulty actuator.
YES
Inspect differential ring gear serrations.
Are serrations OK?
NO
Faulty sensor rotor.
(Differential ring gear)
YES
Faulty ECU.

5 Rear–Wheel Anti–Lock Brake System works inefficiently.

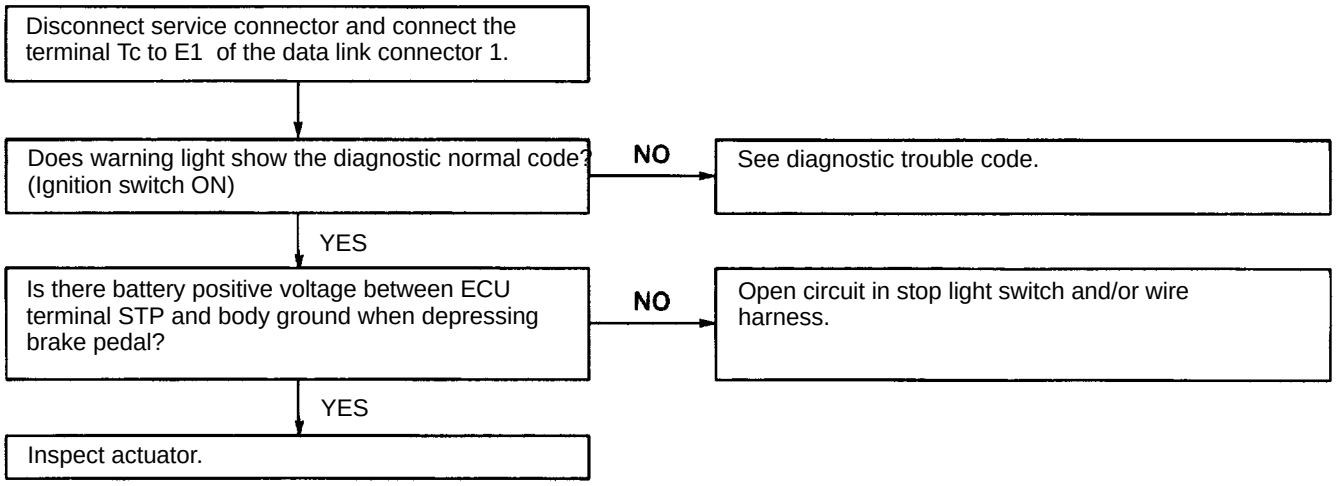

SPEED SENSOR

COMPONENTS

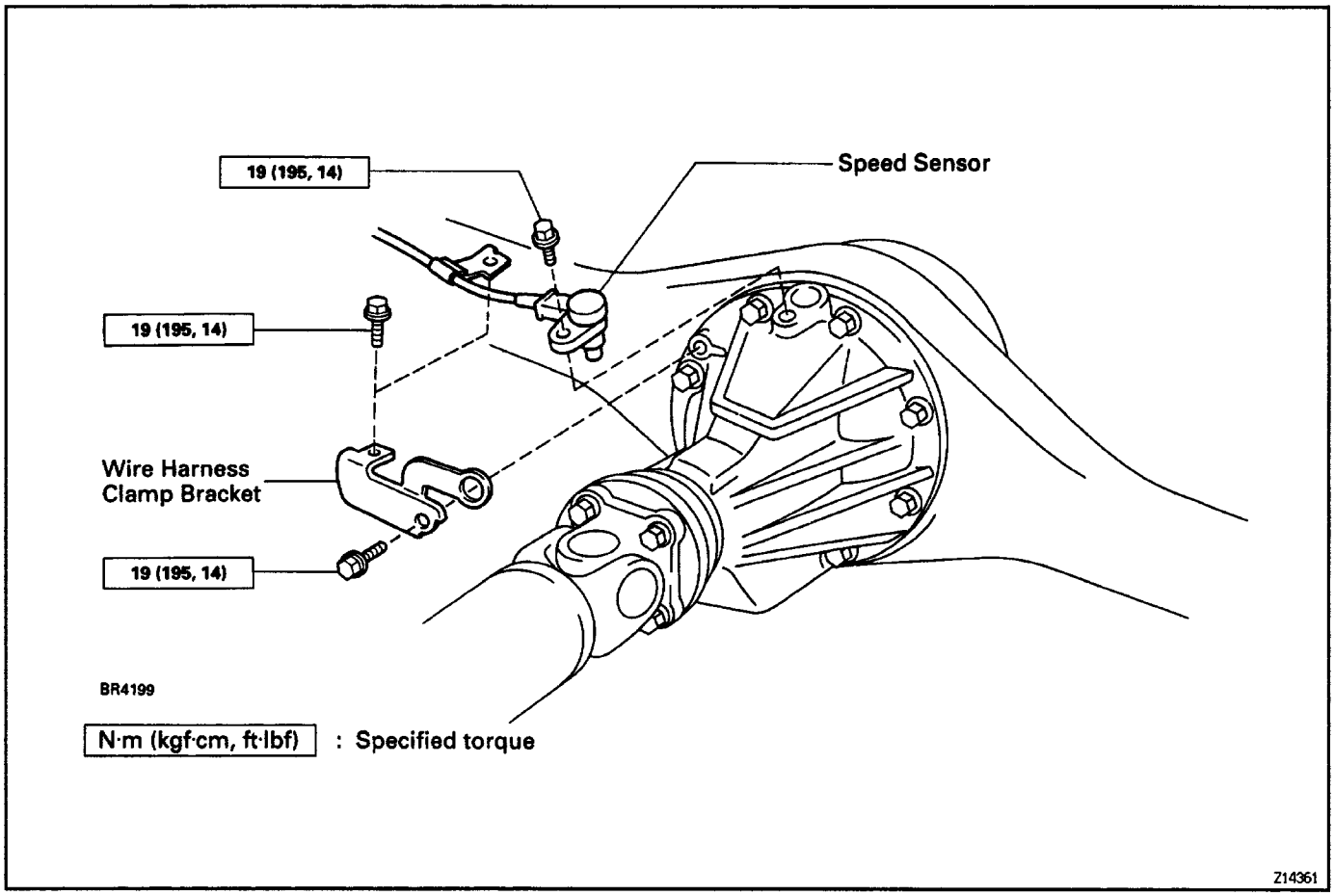

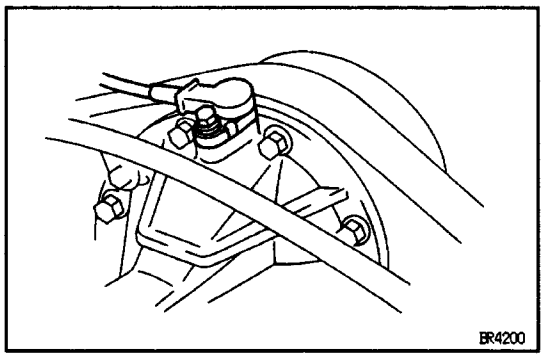

SPEED SENSOR INSPECTION

1. INSPECT SENSOR INSTALLATION

Check that the sensor installation bolt is tightened properly.

If not, tighten the bolt.

Torque: 19 N–m (195 kgf–cm, 14 ft–lbf)

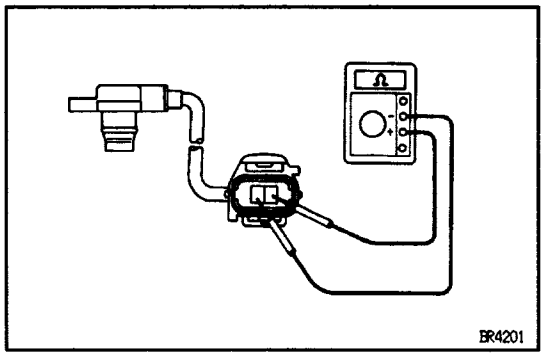

2. INSPECT SPEED SENSOR

(a) Disconnect the speed sensor connector.

(b) Measure the resistance between terminals.

Resistance:

580–700Ω

If resistance value is not as specified, replace the sensor.

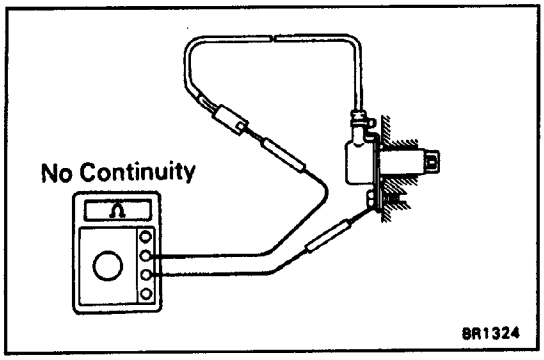

(c) Check that there is no continuity between each terminal and sensor body.
If there is continuity, replace the sensor.
(d) Connect the speed sensor connector.

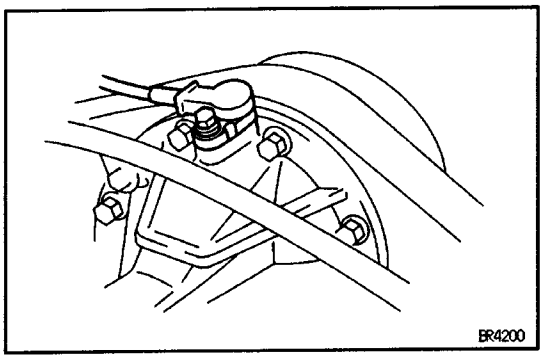

3. VISUALLY INSPECT SENSOR ROTOR SERRATIONS

(a) Disconnect the speed sensor wire harness clamp bolt.
(b) Remove the speed sensor installation bolt and pull out the speed sensor.

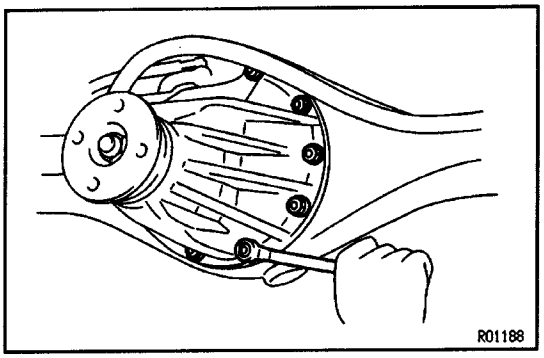

(c) Remove the differential carrier assembly.
(See page SA–141)

NOTICE: To prevent damage to the ring gear serrations, do not strike the ring gear.

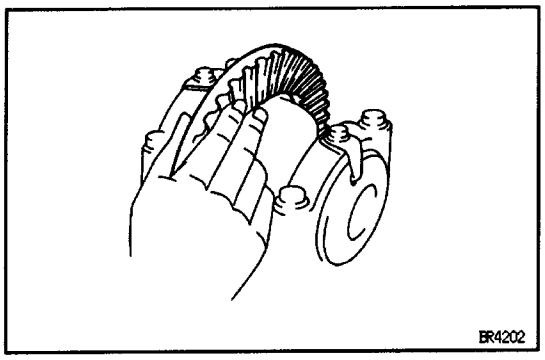

(d) Inspect the ring gear (sensor rotor) serrations for scratches, cracks, warping or missing teeth.
If necessary, replace the ring gear.

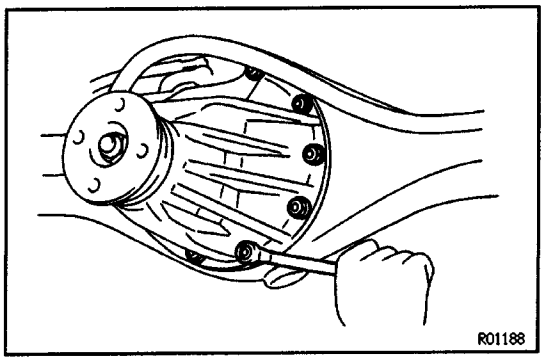

(e) Install the differential carrier assembly.
(See page **SA–142**)

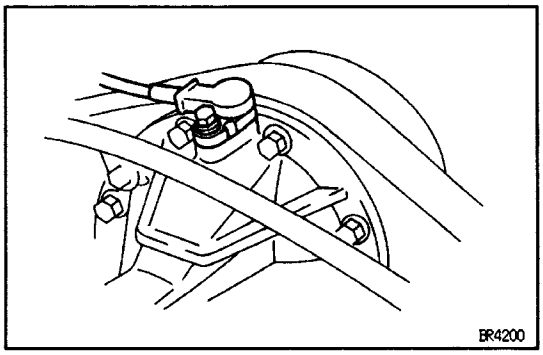

(f) Install the speed sensor and tighten the installation bolt.

Torque: 19 N–m (195 kgf–cm, 14 ft–lbf)

(g) Set the speed sensor wire harness clamp and tighten the clamp bolt.

Torque: 19 N–m (195 kgf–cm, 14 ft–lbf)

4. CHECK SPEED SENSOR SIGNAL

(See page BR–53**)**

SERVICE SPECIFICATIONS

SERVICE DATA

Brake pedal height		145 mm (5.71 in.)
Brake pedal freeplay		3–6 mm (0.12–0.24 in.)
Brake pedal reserve distance at 490 N (50 kgf, 110.2 lbf) (w/o 4–ABS)		More than 65 mm (2.56 in.)
Brake pedal reserve distance at 490 N (50 kgf, 110.2 lbf) (w/ 4–ABS)		More than 70 mm (2.76 in.)
Brake booster push rod to piston clearance (w/ SST)		0 mm (0 in.)
Front brake pad thickness	STD	9.5 mm (0.374 in.)
	Minimum	1.0 mm (0.039 in.)
Front brake disc thickness	STD	25.0 mm (0.984 in.)
	Minimum	23.0 mm (0.906 in.)
Front brake disc runout	Maximum	0.09 mm (0.0035 in.)
Rear brake drum inside diameter	STD	295.0 mm (11.614 in.)
	Maximum	297.0 mm (11.693 in.)
Rear brake lining thickness	STD	6.0 mm (0.236 in.)
	Minimum	1.0 mm (0.039 in.)
Rear brake drum to shoe clearance		0.6 mm (0.024 in.)
Parking brake lever travel at 196 N (20 kgf, 44 lbf)		13 – 19 clicks

TORQUE SPECIFICATIONS

Part tightened	N·m	kgf·cm	ft·lbf
Master cylinder x Piston stopper bolt	10	100	7
Master cylinder x Reservoir	1.7	17.5	15.2 in.·lbf
Master cylinder x Brake booster	13	130	9
Brake line union nut	15	155	11
Brake booster clevis lock nut	25	260	19
Brake booster x Pedal bracket	13	130	9
Front disc X Front axle hub	64	650	47
Front brake caliper x Steering knuckle	123	1,250	90
Rear brake wheel cylinder x Backing plate	10	100	7
Bleeder plug	11	110	8
LSP & BV bracket x Frame	29	300	22
LSP & BV LSP & BV bracket	13	130	9
LSP & BV spring x LSP & BV bracket	18	185	13
LSP & BV spring x Shackle	18	185	13
LSP & BV shackle lock nut	25	250	18
LSP & BV shackle x Shackle bracket	13	130	9
LSP & BV shackle bracket x Lateral rod	19	195	14
REAR–WHEEL ANTI–LOCK BRAKE SYSTEM			
ABS actuator x PS pressure line	47	475	34
ABS actuator x ABS actuator bracket	13	130	9
ABS actuator bracket x Frame	28	290	21
Speed sensor installation bolt	19	195	14
Speed sensor wire harness x Clamp bracket	19	195	14
Clamp bracket x Rear differential	19	195	14
Deceleration sensor x Body	5.4	55	48 in.·lbf
4–WHEEL ANTI–LOCK BRAKE SYSTEM			
ABS actuator bracket x Body	19	195	14
A8S actuator bracket x No.3 actuator bracket	19	195	14
No.3 actuator bracket x Body	19	195	14
ABS actuator bracket x ABS actuator bracket	5.4	55	48in.·lbf
Front speed sensor x Steering knuckle	7.8	80	69in.·lbf
Rear speed sensor x Axle carrier	7.8	80	69in.·lbf

TROUBLESHOOTING

Use the table below to help you find the cause of the problem. The numbers indicate the priority of the likely cause of the problem. Check each part in order. If necessary, replace these parts.

See page	–	–	BR–18,25	BR–18	BR–7	BR–10	BR–25	BR–9	–	BR–17	BR–25	BR–18,25	BR–18	BR–18,25	BR–18	BR–8	BR–18	BR–18,25	BR–18	BR–18	BR–18,25	BR–18,25	BR–18	BR–25
Part Name / Trouble / Low pedal or spongy pedal	Brake system (Fluid leaks)	Brake system (Air in)	Brake pad or lining (Worn)	Piston seal (Worn or damaged)	Bake pedal (Freeplay minimal)	Master cylinder (Faulty)	Rear brake (Shoe clearance out of adjustment)	Parking brake (Lever travel out of adjustment)	Parking brake wire (Sticking)	Booster push rod tout of adjustment)	Anchor or rectum spring (Faulty)	Pad or lining (Cracked or distorted)	Pion (Stuck)	Pad or lining (Oil)	Piston (Frozen)	Booster system (Vacuum leaks)	Pad support plate (Loose)	Installation bolt (Loose)	Sliding pinWon)	Disc (Scored)	Pad or lining (Dirty)	Pad or lining (Glazed)	Anti–squeal shim (Damaged)	Hold–down spring Damaged)
	1	2		3		5	4			6														
Brake drag					1	11	4	2	3	9	8	5	6		7	10								
Brake pull												5	1	2	3					4				
Hard pedal but brake inefficient	1	2	3				5			9		4		6		10				8		7		
Noise from brakes											8	1					4	2	5	3	6	7	9	10

CHARGING SYSTEM

DESCRIPTION

The generator is a small, high speed, high performance unit with an voltage regulator incorporated. The voltage rgulator uses integrated circuits and controls the voltage produced by the generator.

PRECAUTION

1. **Check that the battery cables are connected to the correct terminals.**

2. **Disconnect the battery cables when the battery is given a quick charge.**

3. **Do not perform tests with a high voltage insulation resistance tester.**
4. **Never disconnect the battery while the engine is running.**

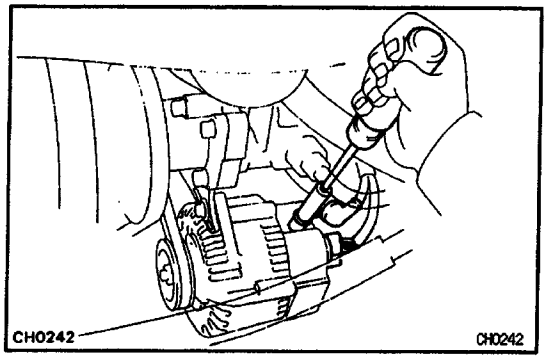

GENERATOR

GENERATOR REMOVAL

22R–E:

1. DISCONNECT NEGATIVE TERMINAL CABLE FROM BATTERY

2. w/ PS:
DRAIN COOLANT

3. DISCONNECT WIRING FROM GENERATOR
(a) Disconnect the connector from the generator.
(b) Remove the nut and the wire from the generator.

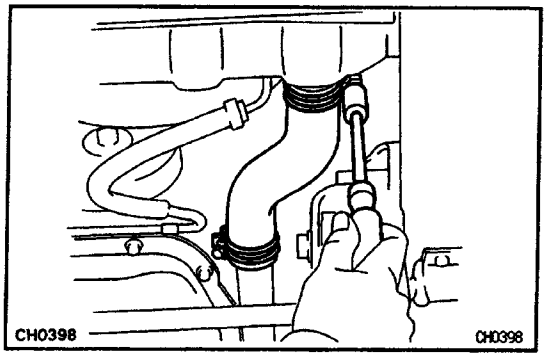

4. w/ PS:
REMOVE WATER INLET HOSE
(a) Remove the engine under cover.
(b) Remove the water inlet hose.
(c) w/ A/C:
Remove the No.2 fan shroud.

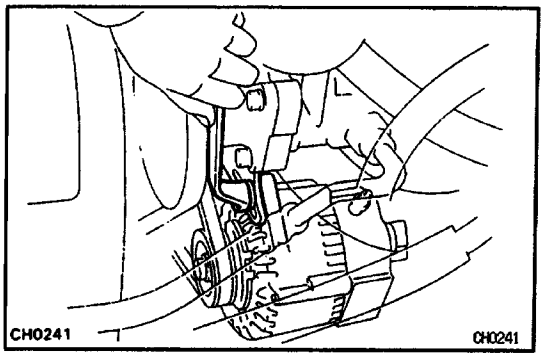

5. REMOVE GENERATOR DRIVE BELT
(a) Loosen the generator pivot and remove the adjusting bolt.
(b) Remove the drive belt.

6. REMOVE GENERATOR
(a) Hold the generator and remove the pivot.
(b) Remove the generator.

3VZ – E:

1. DISCONNECT NEGATIVE TERMINAL CABLE FROM BATTERY

2. DISCONNECT WIRING FROM GENERATOR
(a) Disconnect the connector from the generator.
(b) Remove the nut and disconnect the wire from the generator.

3. REMOVE GENERATOR DRIVE BELT
Loosen the generator pivot bolts, adjusting lock bolt and remove the generator drive belt.

4. REMOVE GENERATOR
(a) Remove the pivot bolt and adjusting lock bolt.
(b) Remove the generator.

COMPONENTS FOR DISASSEMBLY AND ASSEMBLY

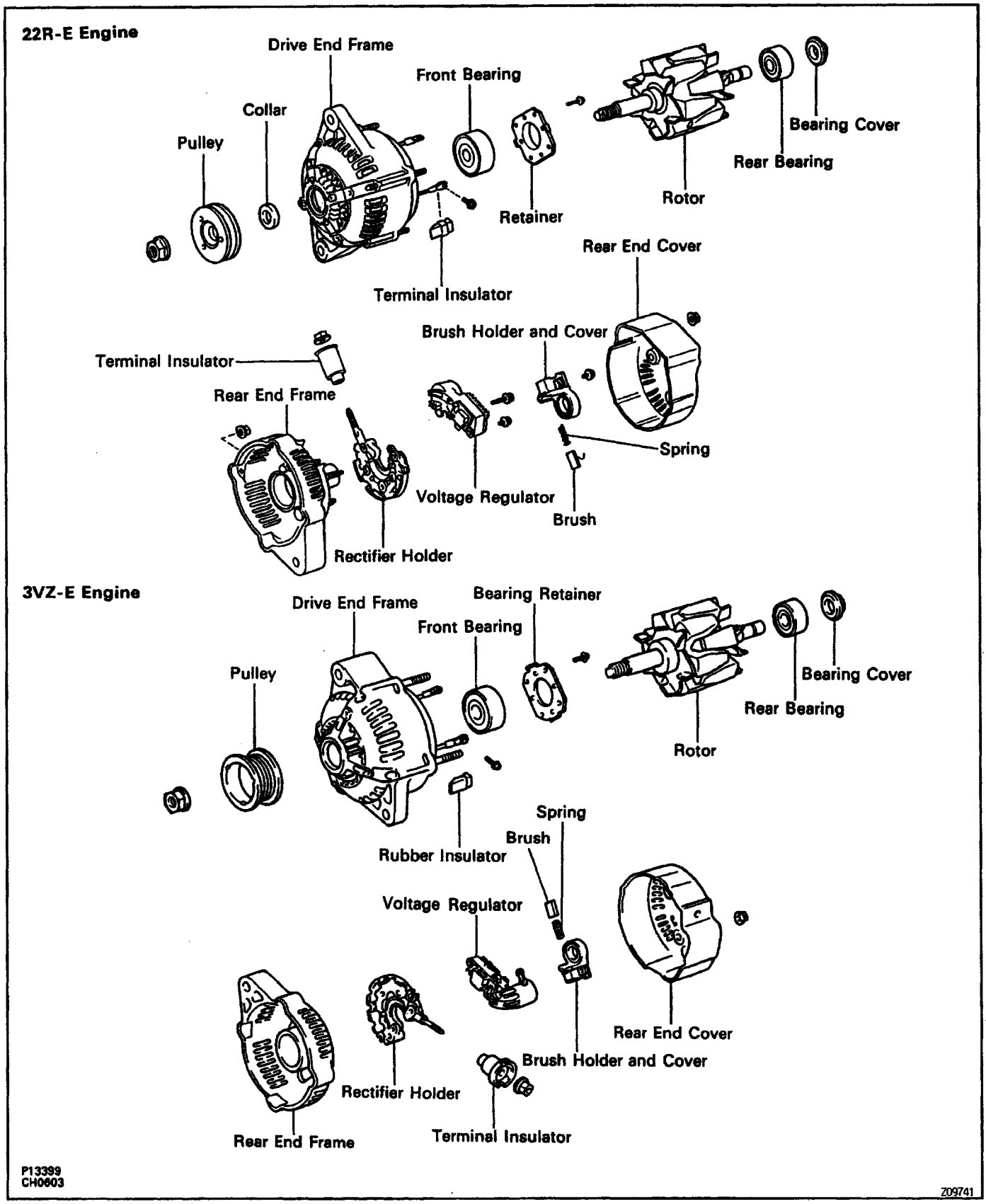

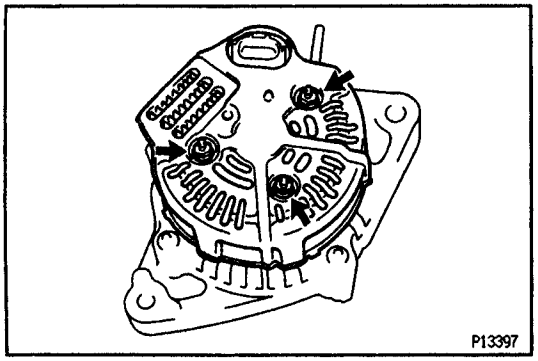

GENERATOR DISASSEMBLY

(See Components for Disassembly and Assembly)

1. REMOVE REAR END COVER

(a) Remove the nut and terminal insulator.

(b) Remove the 3 nuts and end cover.

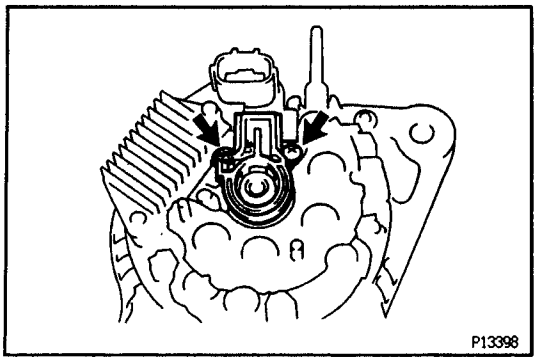

2. REMOVE BRUSH HOLDER

Remove the 2 screws, brush holder and cover.

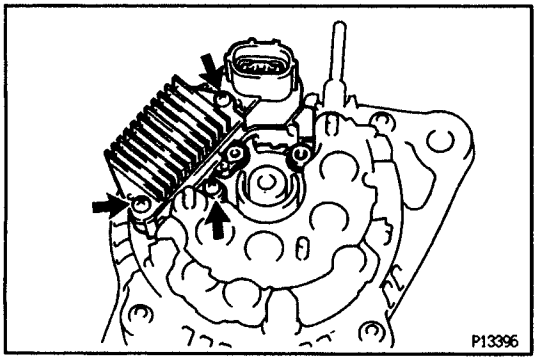

3. REMOVE VOLTAGE REGULATOR

Remove the 3 screws and voltage regulator.

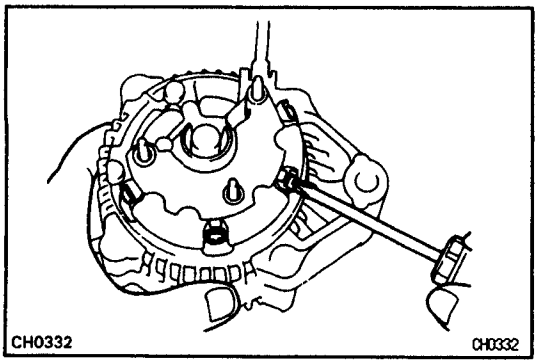

4. REMOVE RECTIFIER HOLDER

(a) Remove the 4 screws and rectifier holder.

(b) Remove the 4 rubber insulators.

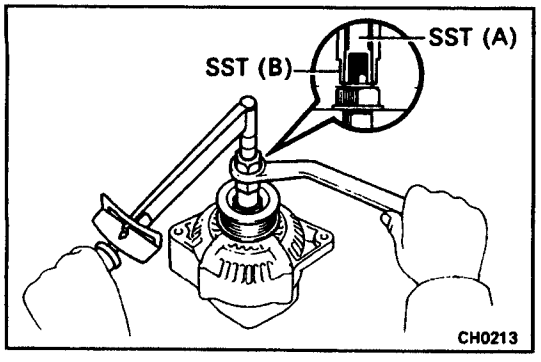

5. REMOVE PULLEY

(a) Hold SST A with a torque wrench, and tighten SST B clockwise to the specified torque.

SST 09820–63010

Torque: 39 N–m (400 kgf–cm, 29 ft–lbf)

(b) Check that SST A is secured to the rotor shaft.

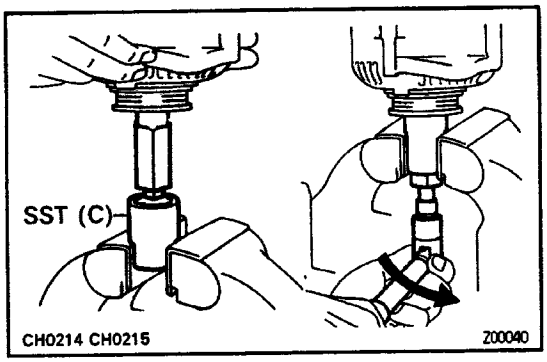

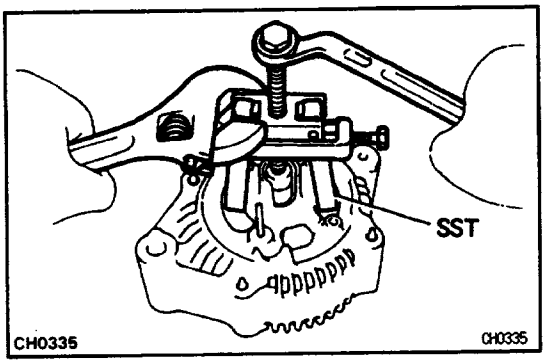

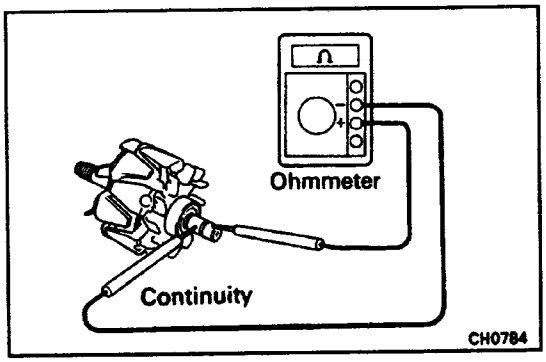

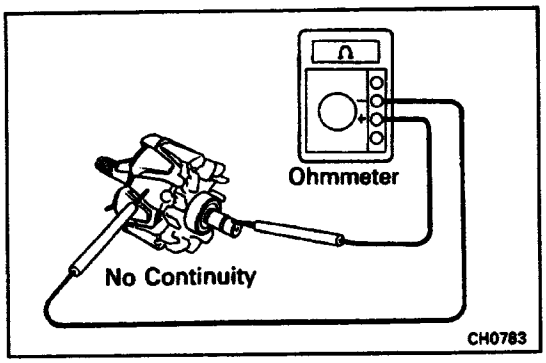

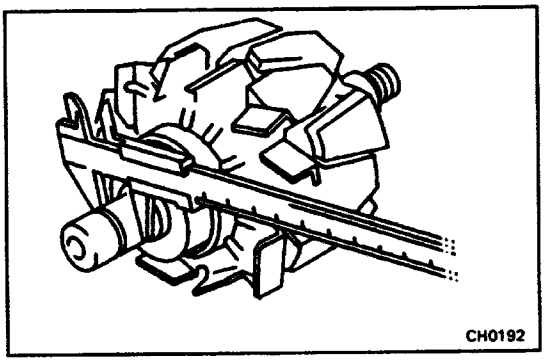

(c) As shown in the illustration, mount SST C in a vise, and install the generator with SST (A and B) to SST C.

(d) To loosen the pulley nut, turn SST A in the direction shown in the illustration.

NOTICE: To prevent damage to the rotor shaft, do not loosen the pulley nut more than one–half of a turn.

(e) Remove the generator with SST (A and B) from SST C.

(f) Turn SST B and remove SST A and B.

(g) Remove the pulley nut and pulley.

6. REMOVE REAR END FRAME

(a) Remove the 4 nuts.

(b) Using SST, remove the rear end frame.
SST 09286–46011

7. REMOVE ROTOR FROM DRIVE END FRAME

GENERATOR INSPECTION AND REPAIR

Rotor

1. INSPECT ROTOR FOR OPEN CIRCUIT

Using an ohmmeter, check that there is continuity between the slip rings.

Standard resistance (Cold):

2.8–3.00

If there is no continuity, replace the rotor.

2. INSPECT ROTOR FOR GROUND

Using an ohmmeter, check that there is no continuity between the slip ring and the rotor.

If there is continuity, replace the rotor.

3. INSPECT SLIP RINGS

(a) Check that the slip rings are not rough or scored. If rough or scored, replace the rotor.

(b) Using vernier calipers, measure the slip ring diarne ters.

Standard diameter:

14.2 – 14.4 mm (0.559 – 0.567 in.)

Minimum diameter:

12.8 mm (o.504 in.)

If the diameter is less than minimum, replace the rotor

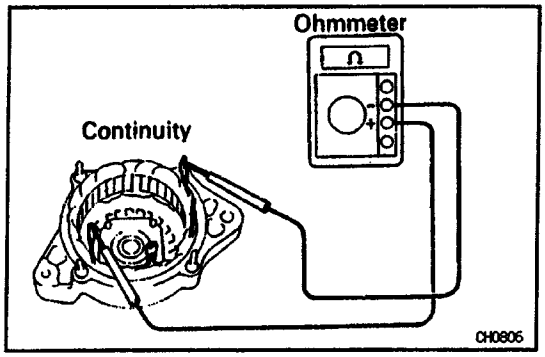

Stator (Drive End Frame)

1. INSPECT STATOR FOR OPEN CIRCUIT

Using an ohmmeter, check that there is continuity between the coil leads.

If there is no continuity, replace the drive end frame assembly.

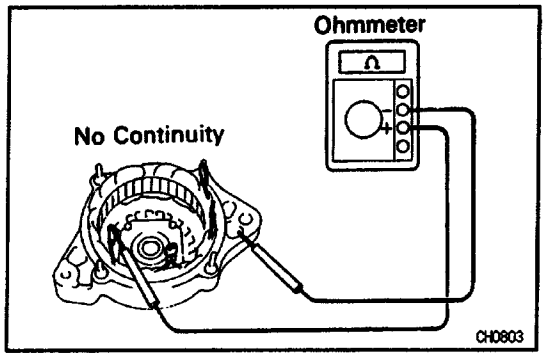

2. INSPECT STATOR FOR GROUND

Using an ohmmeter, check that there is no continuity between the coil leads and drive end frame.

If there is continuity, replace the drive end frame assembly.

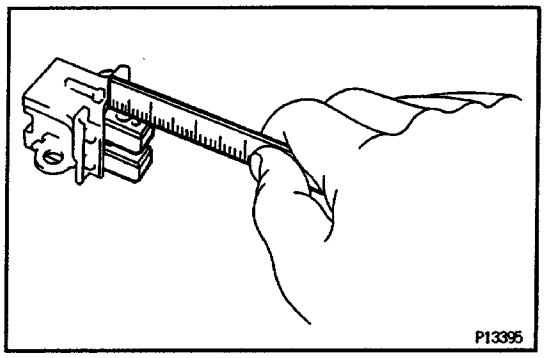

Brushes

1. INSPECT EXPOSED BRUSH LENGTH

Using a scale, measure the exposed brush length.

Standard exposed length:

10.5 mm (0.413 in.)

Minimum exposed length:

1.5 mm (0.059 in.)

If the exposed length is less than minimum, replace the brushes.

2. IF NECESSARY, REPLACE BRUSHES

(a) Unsolder and remove the brush and spring.

(b) Run the wire of the brush through the hole in the brush holder, and insert the spring and brush into the brush holder.

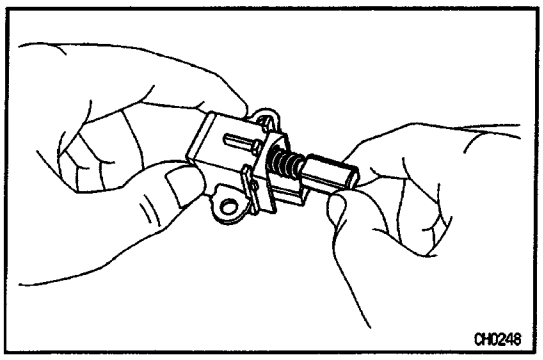

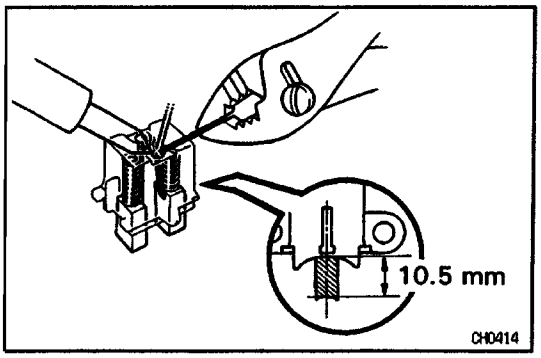

(c) Solder the brush wire to the brush holder at the exposed length.

Exposed length:

10.5 mm (0.413 in.)

(d) Check that the brush moves smoothly in the brush holder.

(e) Cut off the excess wire.

(f) Apply insulation paint to the soldered point.

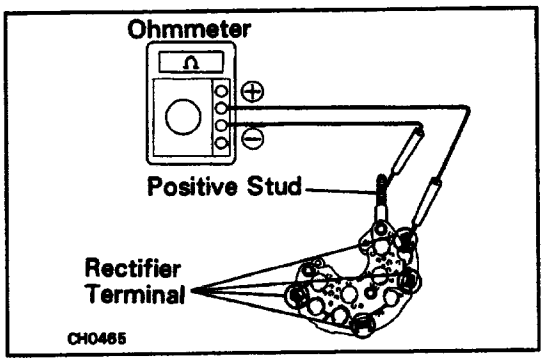

Rectifier

1. INSPECT POSITIVE SIDE RECTIFIER

(a) Using an ohmmeter, connect one tester probe to the positive stud and the other to each rectifier terminal.

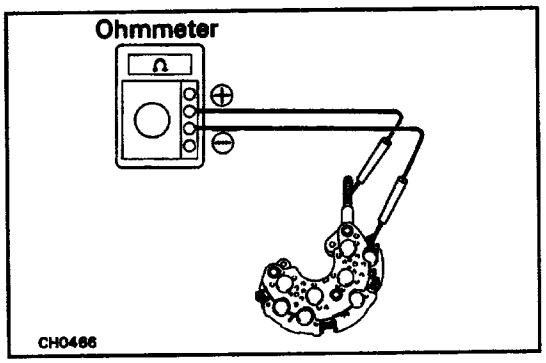

(b) Reverse the polarity of the tester probes.

(c) Check that one shows continuity and the other shows no continuity.

If not, replace the rectifier holder.

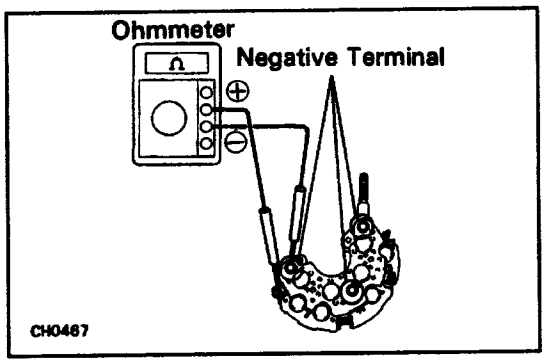

2. INSPECT NEGATIVE SIDE RECTIFIER

(a) Connect one tester probe to each rectifier terminal and the other to each rectifier negative (–) terminal.

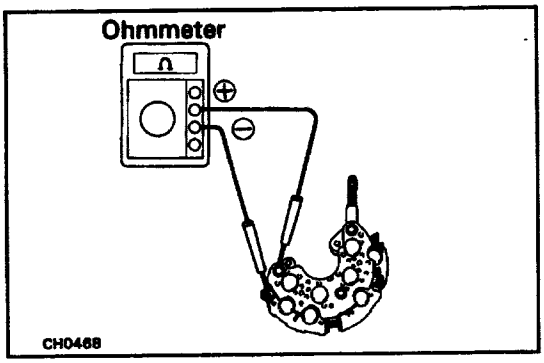

(b) Reverse the polarity of the tester probes.

(c) Check that one shows continuity and the other show; no continuity.

If not, replace the rectifier holder.

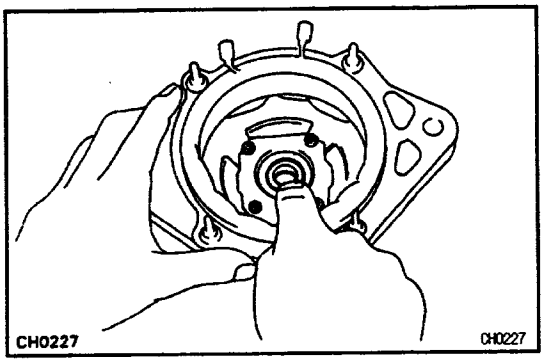

Bearings

1. INSPECT FRONT BEARING

Check that the bearing is not rough or worn.

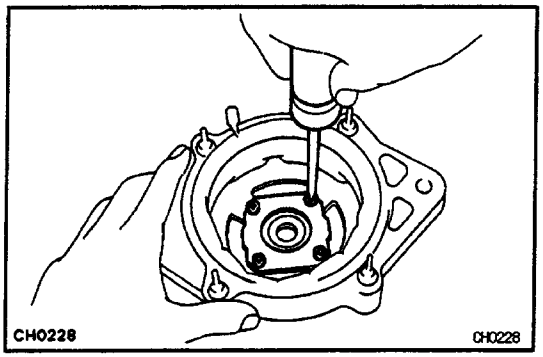

2. IF NECESSARY, REPLACE FRONT BEARING

(a) Remove the 4 screws and bearing retainer.

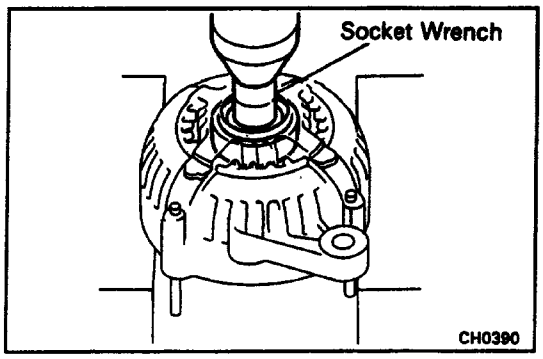

(b) Using a press and socket wrench, press out the front bearing.

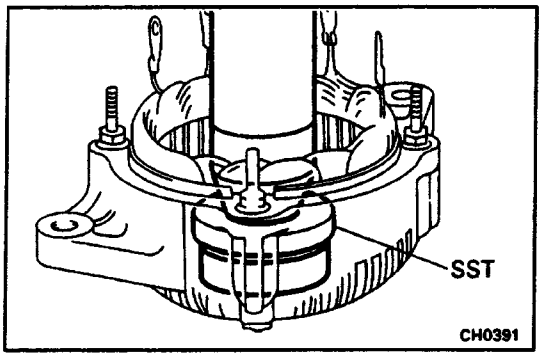

(c) Using SST and a press, press the front bearing into the drive end frame.

SST 09608–20012 (09608–00030)

(d) Install the bearing retainer with the 4 screws.

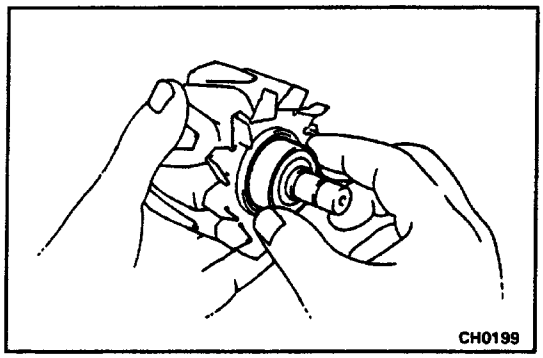

3. INSPECT REAR BEARING

Check that the bearing is not –rough or worn.

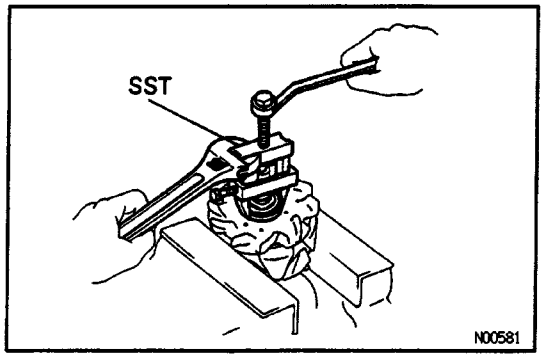

4. IF NECESSARY, REPLACE REAR BEARING

(a) Using SST, remove the bearing cover and bearing.

SST 09820 – 00021

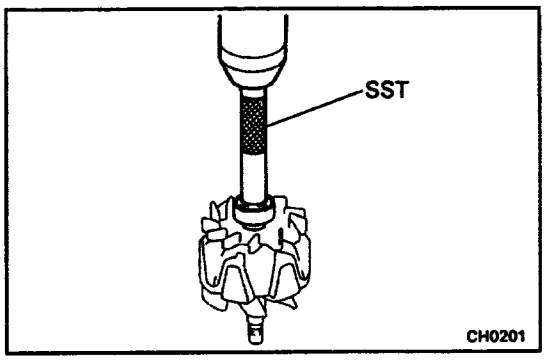

(b) Using SST and a press, press in a new bearing and the bearing cover.

SST 09285–76010

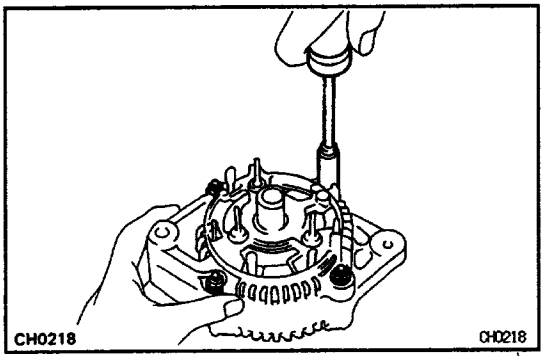

GENERATOR ASSEMBLY

(See Components for Disassembly and Assembly)

1. INSTALL ROTOR TO DRIVE END FRAME

2. INSTALL REAR END FRAME

(a) Using a plastic–faced hammer, lightly tap in the rear end frame.

(b) Install the 4 nuts.

Torque: 4.5 N–m (45 kgf–cm. 39 in.–lbf)

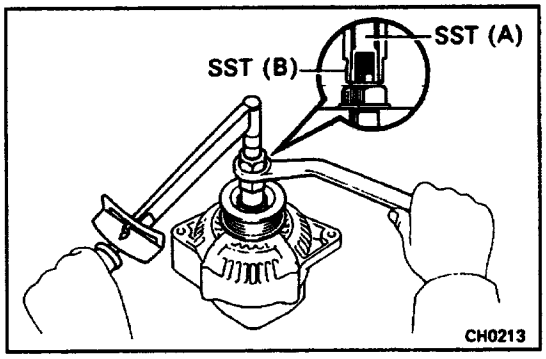

3. INSTALL PULLEY

(a) Install the pulley to the rotor shaft by tightening the pulley nut by hand.

(b) Hold SST A with a torque wrench, and tighten SST B clockwise to the specified torque.

SST 09820–63010

Torque: 39 N–m (400 kgf–cm, 29 ft–lbf)

(c) Check that SST A is secured to the pulley shaft.

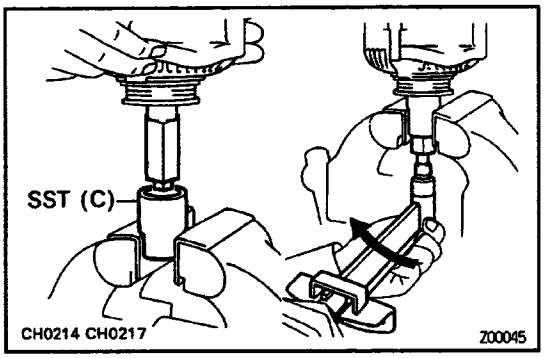

(d) As shown in the illustration, mount SST C in a vise, and install the generator with SST (A and B) to SST C.

(e) To torque the pulley nut, turn SST A in the direction shown in the illustration.

Torque: 110 N–m (1.125 kgf–cm. 81 ftYbf)

(f) Remove the generator with SST (A and B) from SST C.

(g) Turn SST B and remove SST A and B.

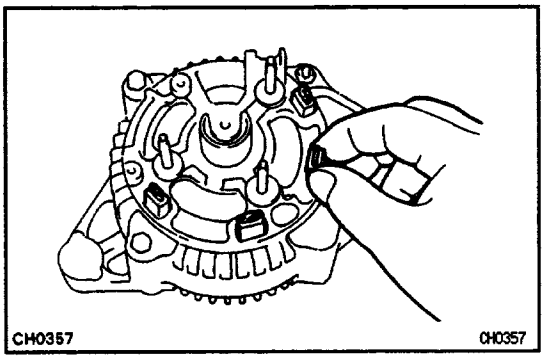

4. INSTALL RECTIFIER HOLDER

(a) Install the 4 rubber insulators on the lead wires.

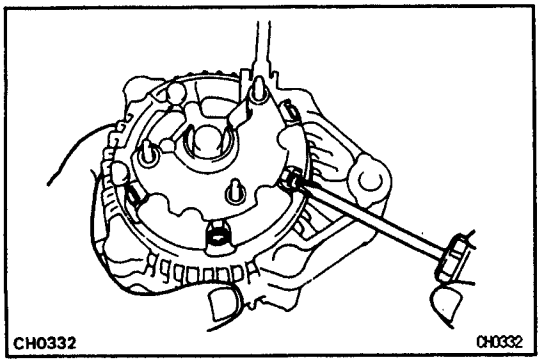

(b) Install the rectifier with the 4 screws.
Torque: 2.0 N–m (20 kgf–cm, 18 in.–lbf)

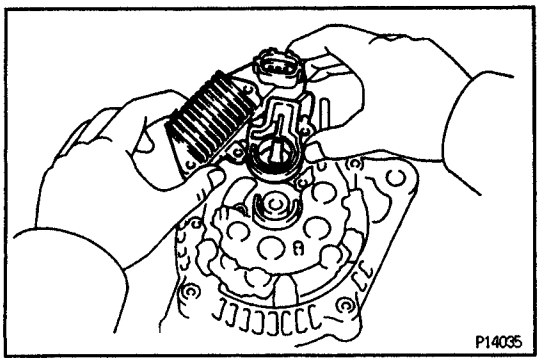

5. INSTALL BRUSH HOLDER AND VOLTAGE REGULATOR

(a) Place the brush holder cover to the brush holder.
(b) Install the voltage regulator and brush holder to the rear end frame horizontally as shown in the illustration.

HINT: Check that the brush holder's cover doesn't slip to one side during installation.

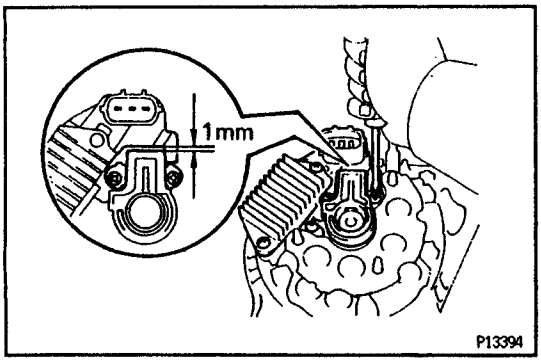

(c) Tighten the 5 screws until there is a clearance of at least 1 mm (0.04 in.) between the brush holder cover and connector.

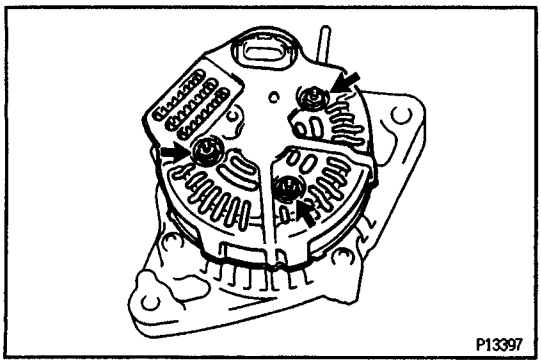

6. INSTALL REAR END COVER

(a) Install the end cover with the 3 nuts.
Torque: 4.5 N–m (45 kgf–cm. 39 in.–lbf)
(b) Install the terminal insulator with the nut.
Torque: 4.1 N–m (42 kgf–cm, 36 in.–lbf)

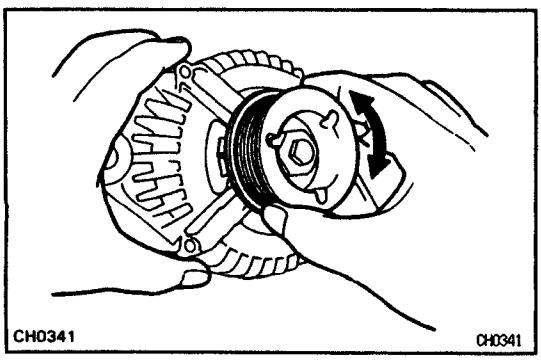

7. MAKE SURE ROTOR ROTATES SMOOTHLY

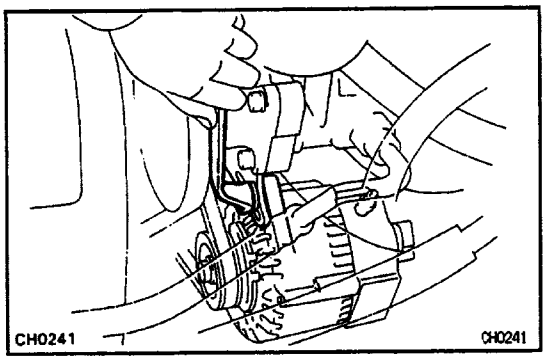

GENERATOR INSTALLATION

22R– E:

1. **INSTALL GENERATOR**
   Mount the generator on the generator bracket with pivot bolt and adjusting bolt.
2. **INSTALL AND ADJUST DRIVE BELT**
   (See step 4 in on–vehicle inspection)

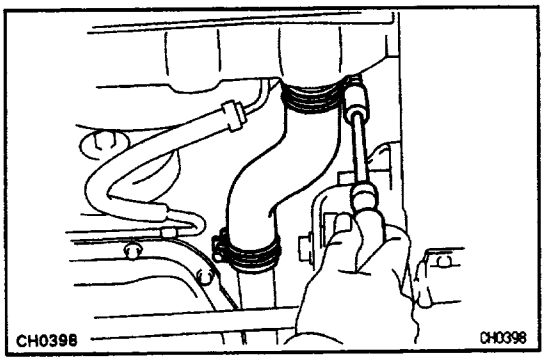

3. **INSTALL WATER INLET HOSE**
   (a) Install the water inlet hose.
   (b) Install the engine under cover:
   (c) w/ A/C:
   Install the No.2 fan shroud.

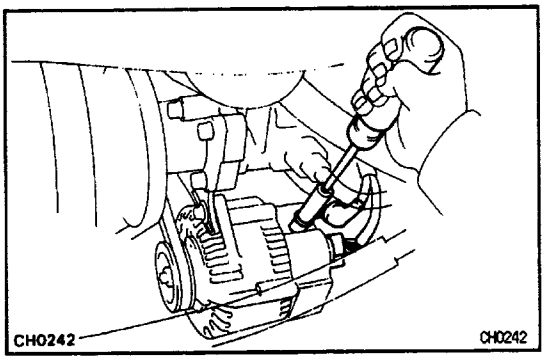

4. **CONNECT WIRING TO GENERATOR**
   (a) Connect the wire to the generator and install the nut.
   (b) Connect the connector to the generator.
5. **FILL WITH COOLANT**
   Close the radiator drain plug and fill with coolant.
6. **CONNECT NEGATIVE TERMINAL CABLE TO BATTERY**
7. **DO ON–VEHICLE INSPECTION**
   (See on–vehicle inspection)

3VZ – E:

1. **INSTALL GENERATOR**
   Mount the generator on the generator bracket with pivot bolt and adjusting lock bolts.
2. **INSTALL DRIVE BELT**
   (See step 4 in on – vehicle inspection)
3. **CONNECT WIRING TO GENERATOR**
   (a) Connect the wire to the generator and install the nut.
   (b) Connect the connector to the generator.
4. **CONNECT NEGATIVE TERMINAL CABLE TO BATTERY**
5. **DO ON–VEHICLE INSPECTION**
   (See on –vehicle inspection)

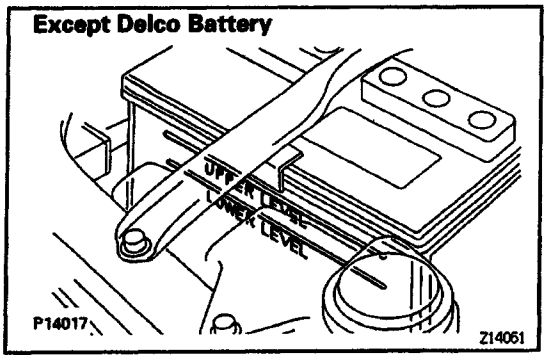

ON–VEHICLE INSPECTION

1. Except Delco Battery.
CHECK BATTERY ELECTROLYTE LEVEL AND VOLTAGE

(a) Check the electrolyte quantity of each cell.

If under the lower level, replace the battery (or add dis–tilled water if possible.). Need to check the charging sy tem.

(b) Measure the battery voltage between the terminals negative (–) and positive (+) of the battery.

Standard voltage:

At 20˚ C (68˚ F) 12.7 – 12.8 V

HINT:

- Before measuring the voltage, turn the ignition switch OFF and turn oft the electrical systems (headlight, blower motor, rear defogger etc.) for 60 seconds to remove the surface charge.
- If the vehicle has been running, wait 5 minutes or more after the vehicle stops before measuring the battery voltage.

If the voltage is less than specification, charge the bat-tery.

HINT: Check the indicator as shown in the illustration.

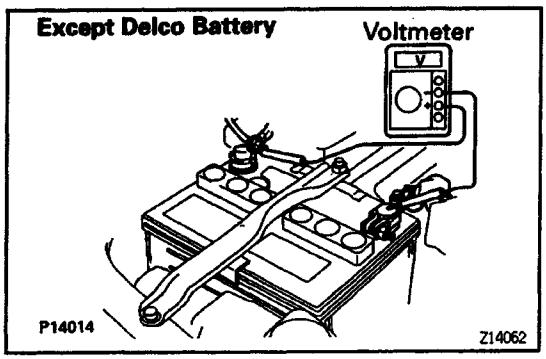

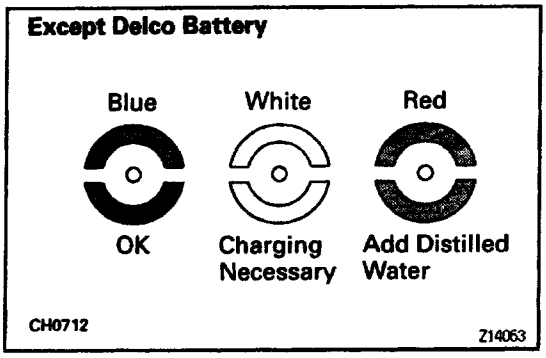

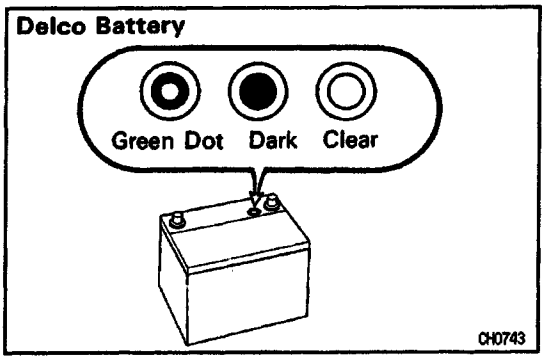

2. Delco Battery:
CHECK HYDROMETER
Green Dot visible:
Battery is adequately charged.
Dark (Green Dot not visible):
Battery must be charged.
Clear or Light Yellow:
Replace battery.

HINT: There is no need to add water during the entire service life of the battery.

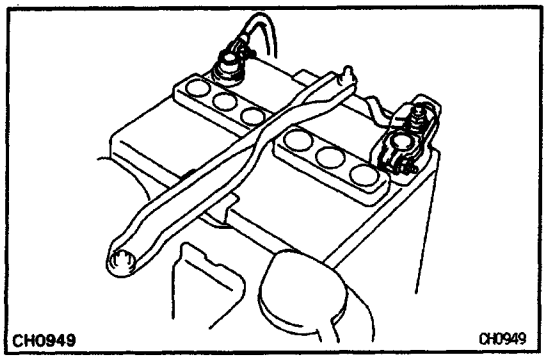

3. CHECK BATTERY TERMINALS, FUSIBLE LINK AND FUSES

(a) Check that the battery terminals are not loose or cor-roded.

(b) Check the fusible link and fuses for continuity.

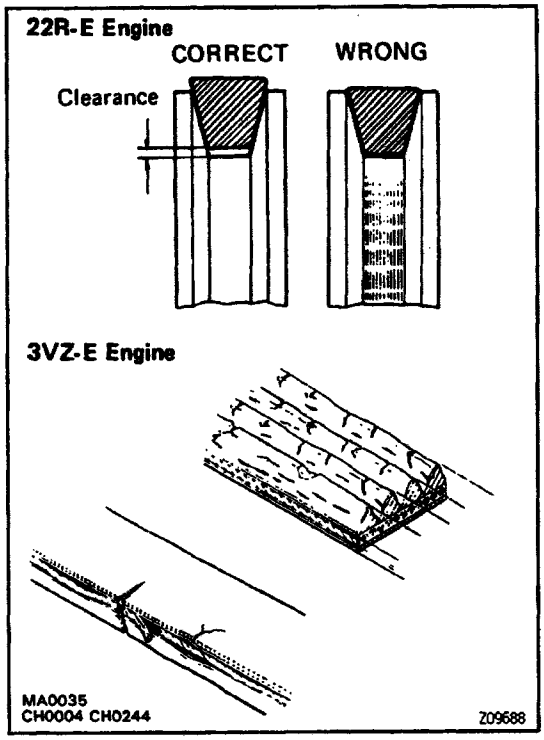

4. INSPECT DRIVE BELT

(a) Visually check the belt for excessive wear, frayed cords etc.

HINT:

22 R – E: Check that the belt does not touch the bottom of the pulley groove.

If defect has been found, replace the drive belt.

3VZ – E: Cracks on the ribbed side of the belt are considered acceptable.

If the belt has chunks missing from the ribs, it should be replaced.

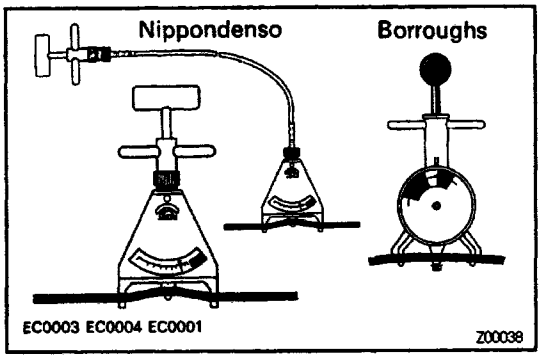

(b) Using a belt tension gauge, check the drive belt tension.

Belt tension gauge:

Nippondenso BTG 20 (95506–00020) or Borroughs No. BT–33–73F

Drive belt tension	22R–E	3VZ–E
New belt	**125 ± 25 lbf**	**160 ± 20 lbf**
Used Belt	**80 ± 20 lbf**	**100 ± 20 lbf**

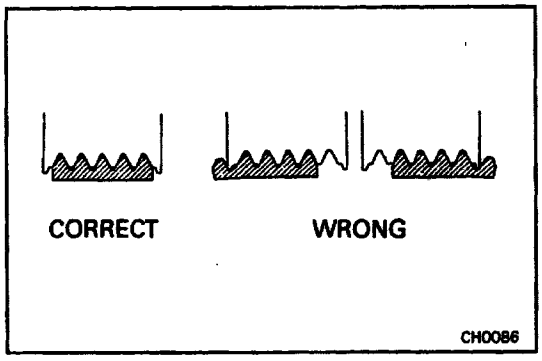

If necessary, adjust the drive belt tension.

HINT:

- ”New belt” refers to a belt which has been used less than 5 minutes on a running engine.
- ”Used belt” refers to a belt which has been used on a running engine for 5 minutes or more.
- After installing the drive belt, check that it fits properly in the ribbed grooves. Check with your hand to confirm that the belt has not slipped out of the groove on the bottom of the crank pulley.
- After installing a new belt, run the engine for approx. 5 minutes and then recheck the tension.

5. INSPECT FUSES FOR CONTINUITY

- ENGINE 10A
- CHARGE 7.5A
- IGN 7.5A

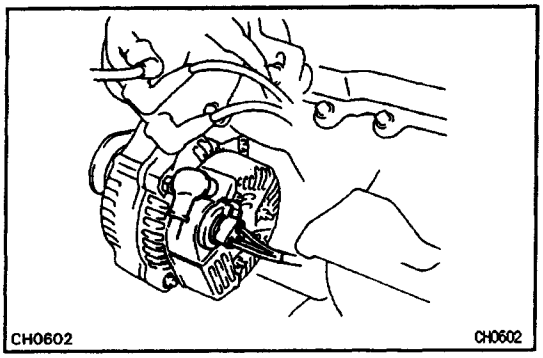

6. VISUALLY CHECK GENERATOR WIRING AND LISTEN FOR ABNORMAL NOISES

(a) Check that the wiring is in good condition.
(b) Check that there is no abnormal noise from the generator while the engine is running.

7. INSPECT DISCHARGE WARNING LIGHT CIRCUIT

(a) Turn the ignition switch ON. Check that the discharge warning light comes on.
(b) Start the engine. Check that the light goes off.

If the light does not operate as specified, troubleshoot the discharge warning light circuit.

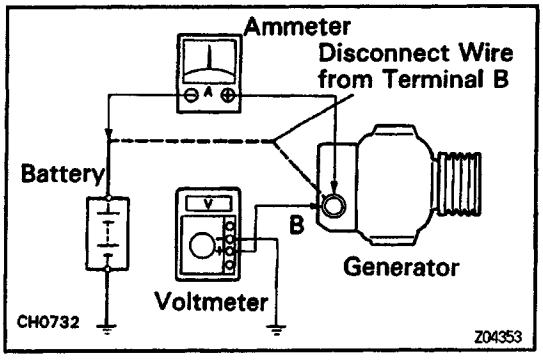

8. CHECK CHARGING CIRCUIT WITHOUT LOAD

HINT: If a battery/generator tester is available, connect the tester to the charging circuit according to the manufacturer's instructions.

(a) If a tester is not available, connect a voltmeter and ammeter to the charging circuit as follows:

- Disconnect the wire from terminal B of the generator and connect the wire to the negative (–) terminal of the ammeter.
- Connect the test lead from the positive (+) term i–nal of the ammeter to terminal B of the generator.
- Connect the positive (+) lead of the voltmeter to terminal B of the generator.
- Ground the negative (–) lead of the voltmeter.

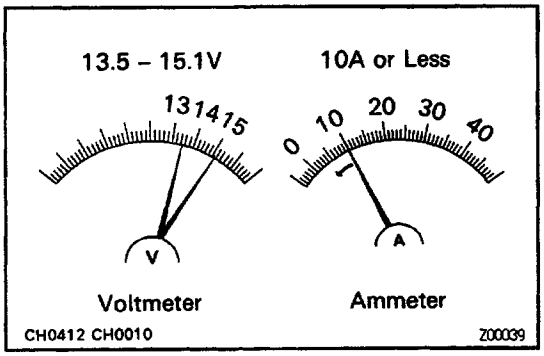

(b) Check the charging circuit as follows:
With the engine running from idling to 2,000 rpm, check the reading on the ammeter and voltmeter.
Standard amperage:
10 A or less
Standard voltage:
At 25 ° C (77 –F): 13.9 – 15.1 V
At 115 ° C (239 ° F): 13.5 – 14.3 V

If the voltage reading is greater than standard voltage, replace the voltage regulator.
If the voltage reading is less than standard voltage, check the voltage regulator and generator as follows:
With terminal F grounded, start the engine and check the voltage reading of terminal6.

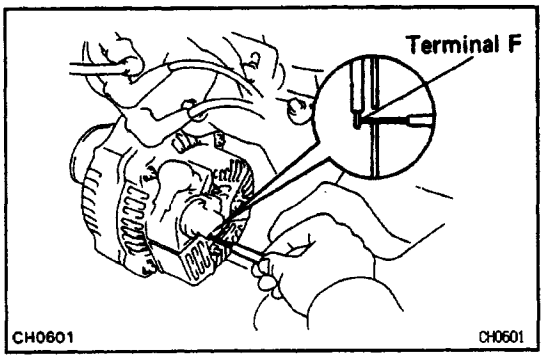

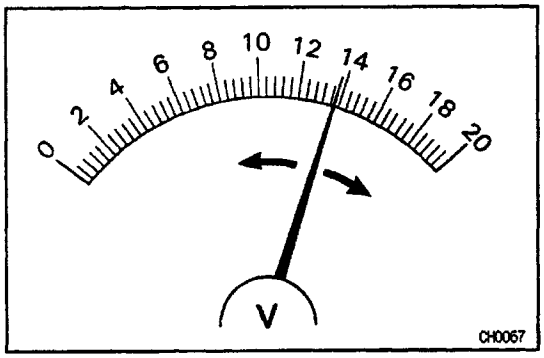

- If the voltage reading is higher than standard voltage, replace the voltage regulator.
- If the voltage reading is less than standard voltage, repair the generator.

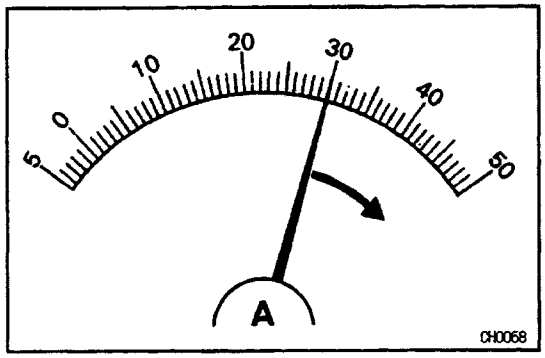

9. INSPECT CHARGING CIRCUIT WITH LOAD

(a) With the engine running at 2,000 rpm, turn on the high beam headlights and place the heater fan control switch to HI.

(b) Check the reading on the ammeter.
Standard amperage:
30 A or more

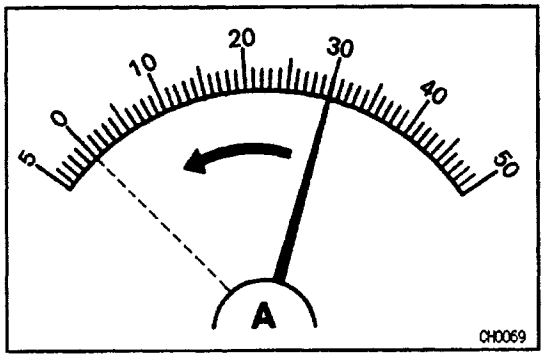

If the ammeter reading is less than 30 A, repair the generator. (See page CH–10)
HINT: If the battery is fully charged, the indication will sometimes be less than 30 A.

SYSTEM CIRCUIT

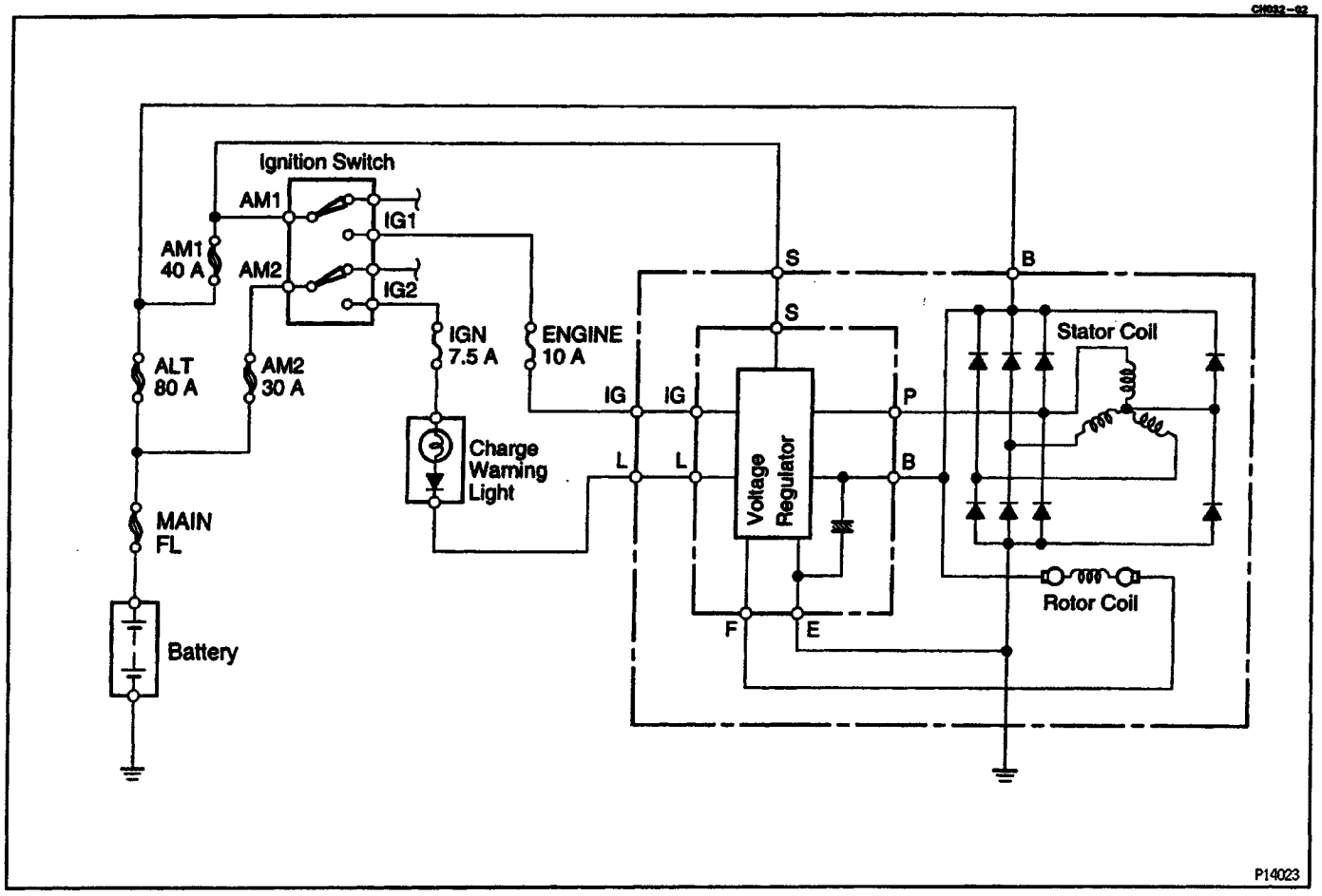

OPERATION

When the ignition switch is turned ON, current from the battery flows from terminal L of the generator through the voltage regulator to terminal E, causing the discharge warning light to light up. Then when the engine is started, the voltage output increases as the generator speed increases. When the voltage output becomes greater than the battery voltage, current for recharging flows from terminal B. Simultaneously, voltage at terminal L increases and the potential difference between battery and terminal L disappears, causing the discharge warning light to go off. When the voltage output exceeds the regulator adjustment voltage, the transistor inside the voltage regulator regulates the voltage so that the voltage from the generator remains constant.

DESCRIPTION

The generator is a small, high speed, high performance unit with an voltage regulator incorporated. The voltage rgulator uses integrated circuits and controls the voltage produced by the generator.

PRECAUTION

1. **Check that the battery cables are connected to the correct terminals.**

2. **Disconnect the battery cables when the battery is given a quick charge.**

3. **Do not perform tests with a high voltage insulation resistance tester.**
4. **Never disconnect the battery while the engine is running.**

PREPARATION

SST (SPECIAL SERVICE TOOLS)

	09285–76010	Injection Pump Camshaft Bearing Cone Replacer	Rotor rear bearing cover
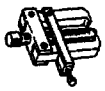	09286–46011	Injection Pump Spline Shaft Puller	Rectifier end frame
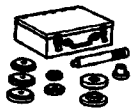	09608–20012	Front Hub & Drive Pinion Bearing Tool Set	
	(09608–00030)	Replacer	Rotor front bearing
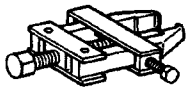	09820–00021	Alternator Rear Bearing Puller	
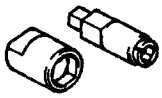	09820–63010	Alternator Pulley Set Nut Wrench set	

RECOMMENDED TOOLS

	09082–00050	TOYOTA Electrical Tester Set	

EQUIPMENT

Ammeter(A)	
Battery specific gravity gauge	Battery
Belt tension gauge	
Torque wrench	
Vernier calipers	Rotor (Slip ring)

SERVICE SPECIFICATIONS

SERVICE DATA

Battery	Voltage	at 20°C (68°F)	12.7 – 12.9 V
Drive belt	Tension	New belt	160 ± 20
		Used belt	100 ± 20
Generator	Rated output ampere		12 V – 60 A
	Brush exposed length	STD	10.5 mm (0.413 in.)
		Minimum	1.5 mm (0.059 in.)
	Rotor coil resistance		2.8 – 3.0 Ω
	Slip ring diameter	STD	14.2 – 14.4 mm (0.559 – 0.567 in.)
		Minimum	12.8 mm (0.504 in.)
Generator regulator	Regulating voltage	at 25°C (77°F)	13.9 – 15.1 V
		at 115°C (239°F)	13.5 – 14.3 V

TORQUE SPECIFICATIONS

Part tightened	N·m	kgf·cm	ft·lbf
Drive end frame x Rear End Fram	4.5	45	39 in.·lbf
Pulley nut	110	1,125	81
Drive end frame x Voltage regulator	2.0	20	17 in.·lbf
Generator rear end cover x Rear and frame	4.5	45	39 in.·lbf
Terminal insulator x Rectifier Holoder	4.1	42	36 in.·lbf

SYSTEM CIRCUIT

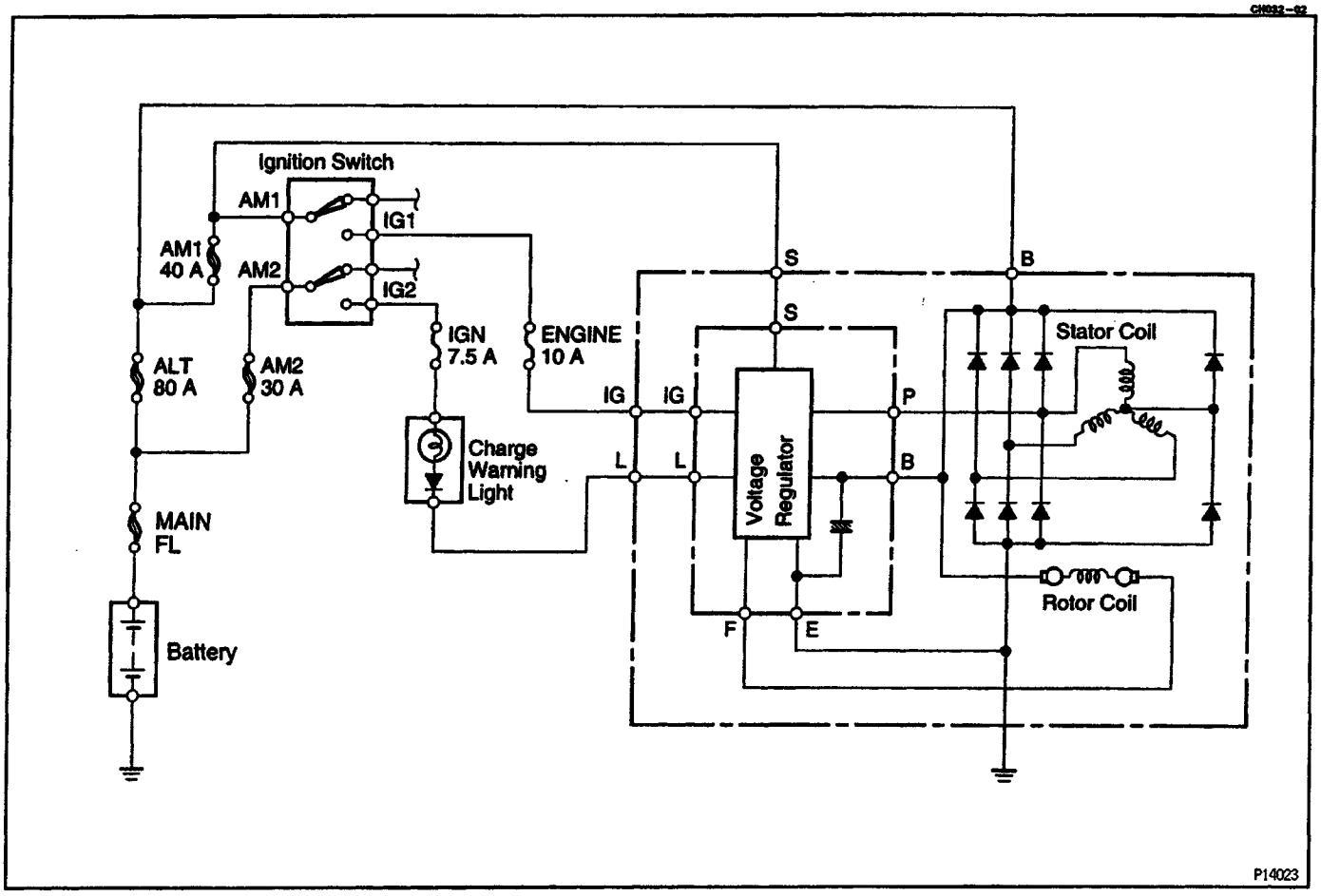

OPERATION

When the ignition switch is turned ON, current from the battery flows from terminal L of the generator through the voltage regulator to terminal E, causing the discharge warning light to light up. Then when the engine is started, the voltage output increases as the generator speed increases. When the voltage output becomes greater than the battery voltage, current for recharging flows from terminal B. Simultaneously, voltage at terminal L increases and the potential difference between battery and terminal L disappears, causing the discharge warning light to go off. When the voltage output exceeds the regulator adjustment voltage, the transistor inside the voltage regulator regulates the voltage so that the voltage from the generator remains constant.

CLUTCH MASTER CYLINDER

COMPONENTS

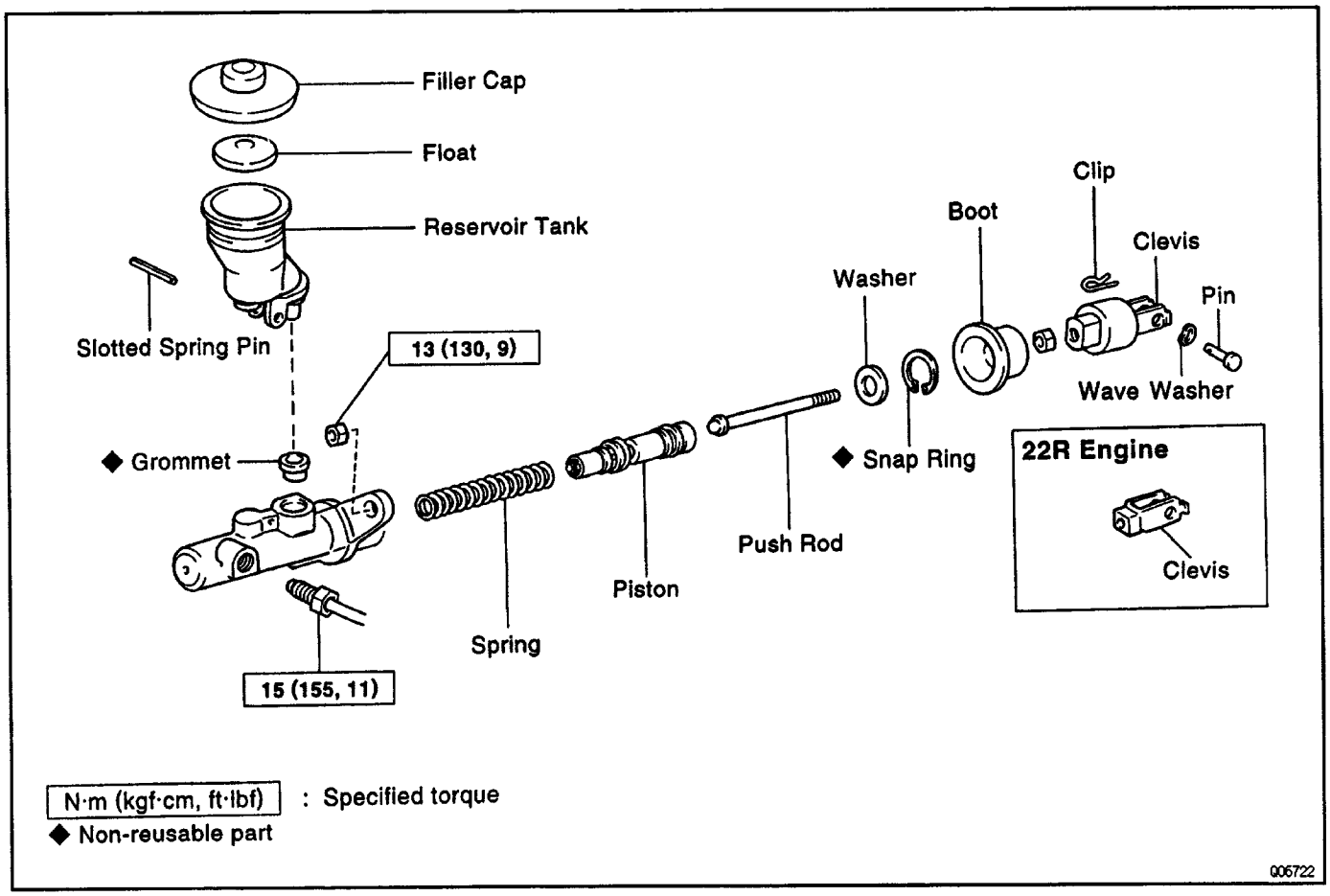

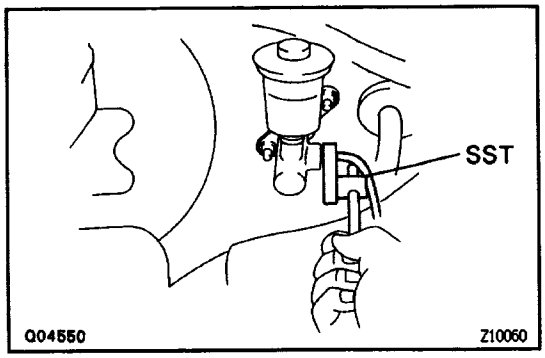

MASTER CYLINDER REMOVAL

1. DRAW OUT FLUID WITH SYRINGE

2. REMOVE PUSH ROD PIN

Remove clip, pin and wave washer.

3. DISCONNECT CLUTCH LINE UNION

Using SST, disconnect the union nut.

SST 09023–00100

4. REMOVE MASTER CYLINDER

(a) Remove the 2 mounting nuts.

(b) Pull out the master cylinder.

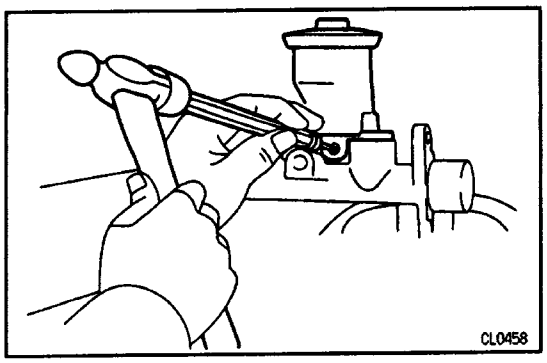

MASTER CYLINDER DISASSEMBLY

1. REMOVE RESERVOIR TANK

(a) Using a pin punch and hammer, drive out the slotted spring pin.

(b) Remove reservoir tank and grommet.

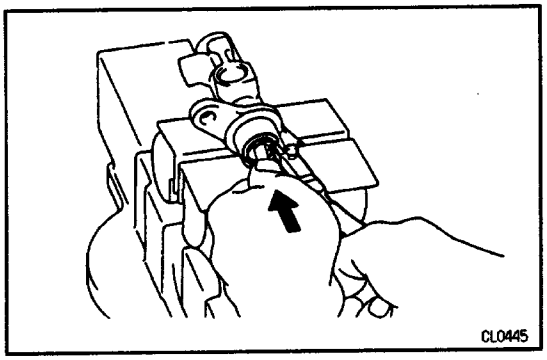

2. REMOVE PUSH ROD

(a) Pull back the boot and, using snap ring pliers, remove the snap ring.

(b) Pull out the push rod and washer.

(c) Remove the piston from the cylinder.

MASTER CYLINDER INSPECTION

HINT: Clean the disassembled parts with compressed air.

1. INSPECT MASTER CYLINDER BORE FOR SCORING OR CORROSION

If a problem is found, clean or replace the cylinder.

2. INSPECT PISTON AND CUPS FOR WEAR, SCORING, CRACKS OR SWELLING

If either one requires replacement, use the parts from the cylinder kit.

3. INSPECT PUSH ROD FOR WEAR OR DAMAGE

If necessary, replace the push rod.

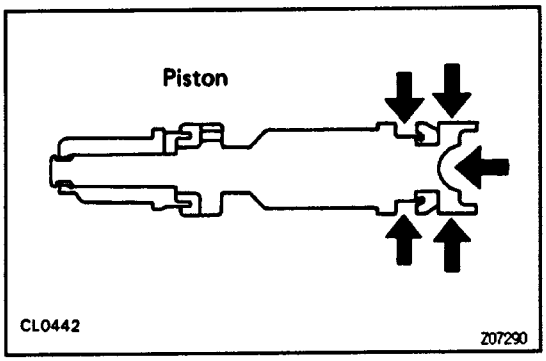

MASTER CYLINDER ASSEMBLY

1. COAT PARTS WITH LITHIUM SOAP BASE GLYCOL GREASE, AS SHOWN

2. INSERT PISTON INTO CYLINDER

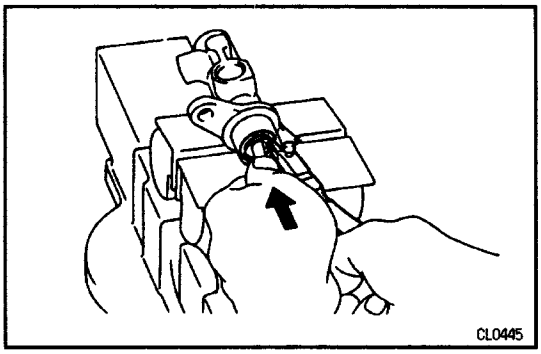

3. INSTALL PUSH ROD ASSEMBLY WITH SNAP RING

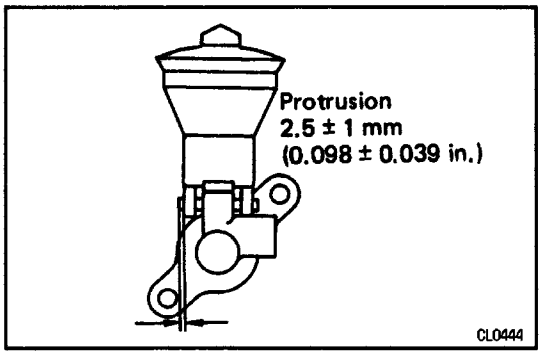

4. INSTALL RESERVOIR TANK

(a) Install reservoir tank and new grommet.

(b) Using a pin punch and hammer, drive in the slotted spring pin.

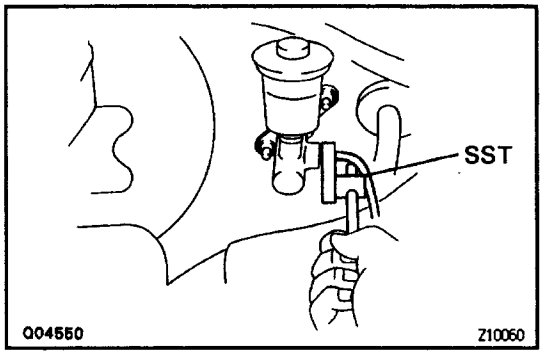

MASTER CYLINDER INSTALLATION

1. INSTALL MASTER CYLINDER

Install the mounting nut, and torque them.

Torque: 13 N–m (130 kgf–cm, 9 ft–lbf)

2. CONNECT CLUTCH LINE UNION

Using SST, connect the union.

SST 09023–00100

Torque: 15 N–m (155 kgf–cm. 11 ft–lbf)

3. CONNECT PUSH ROD AND INSTALL PIN

Install the clip in the push rod pin.

4. BLEED SYSTEM AND ADJUST CLUTCH PEDAL

(See page CL–6, 7)

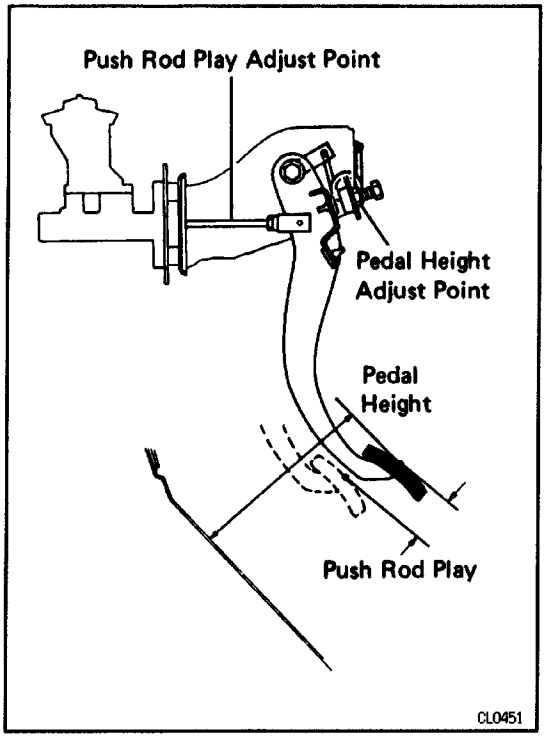

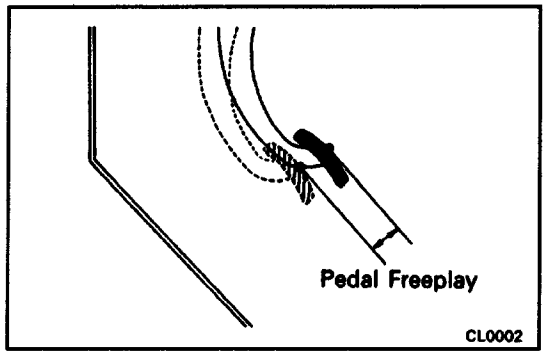

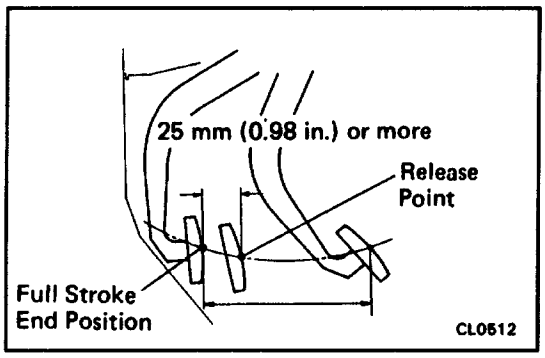

CLUTCH PEDAL

CLUTCH PEDAL CHECK AND ADJUSTMENT

1. CHECK THAT PEDAL HEIGHT AND PUSH ROD PLAY ARE CORRECT

Pedal height from floor panel:

157.5 mm (6.201 in.)

Pedal height from asphalt sheet:

151.5 mm (5.965 in.)

Push rod play at pedal top:

1.0–5.0 mm (0.039–0.197 in.)

If incorrect, adjust the pedal height and push rod play.

2. IF NECESSARY, ADJUST PEDAL HEIGHT AND PUSH ROD PLAY

(a) Loosen the lock nut and turn the stopper bolt until the height is correct. Tighten the lock nut.

(b) Loosen the lock nut and turn the push rod until the push rod play is correct. Tighten the lock nut.

3. CHECK THAT PEDAL FREEPLAY IS CORRECT

Push in on the pedal until the beginning of clutch resistance is felt.

Pedal freeplay:

5.0–15.0 mm (0.197–0.591 in.)

4. IF NECESSARY. ADJUST PEDAL FREEPLAY

(a) Loosen the lock nut and turn the push rod until the freeplay is correct.

(b) Tighten the lock nut.

(c) After adjusting the pedal freeplay, check the pedal height.

5. CHECK CLUTCH RELEASE POINT

(a) Pull the parking brake lever and install wheel stopper.

(b) Start the engine and idle the engine.

(c) Without depressing the clutch pedal, slowly shift the shaft lever into reverse position until the gears contact.

(d) Gradually depress the clutch pedal and measure the stroke distance from the point the gear noise stops (release point) up to the full stroke end position.

Standard distance:

25 mm (0.98 in.) or more

(From pedal stroke end position to release point)

If the distance is not as specified, perform the following operation.

- Inspect pedal height.
- Inspect push rod play and pedal freeplay.
- Bleed the clutch line.
- Inspect the clutch cover and disc.

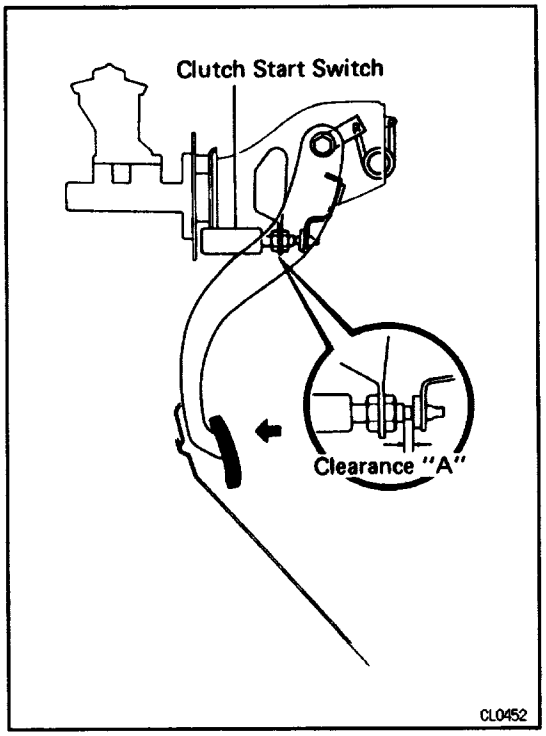

6. CHECK CLUTCH START SYSTEM

(a) Check that the engine does not start when the clutch pedal is released.

(b) Check that the engine starts when the clutch pedal is fully depressed.

(c) Check that clearance ”A” is greater than 1 mm (0.04 in.) when the clutch is fully depressed.

If necessary, adjust or replace the clutch start switch.

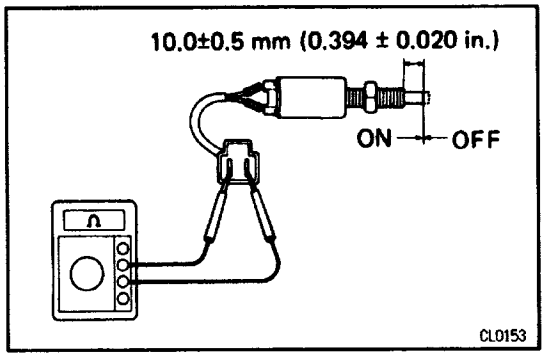

7. CHECK CONTINUITY OF CLUTCH START SWITCH

(a) Check that there is continuity between terminals when the switch is ON (pushed).

(b) Check that there is no continuity between terminals when the switch is OFF (free).

If continuity is not as specified, replace the switch.

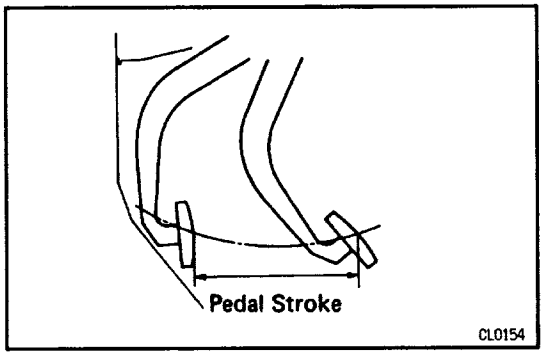

8. ADJUST CLUTCH START SWITCH

(a) Measure the pedal stroke, and check the switch clearance ”A” using the chart left.

(b) Loosen and adjust the switch position.

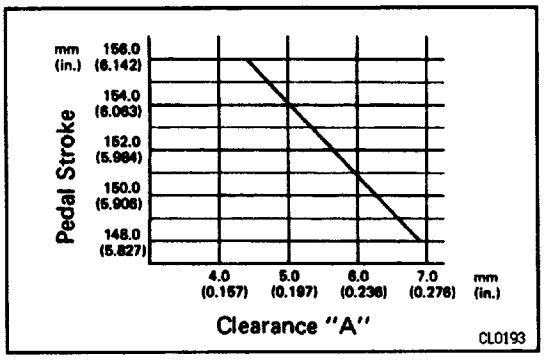

(c) Recheck that the engine dose not start when the clutch pedal is released.

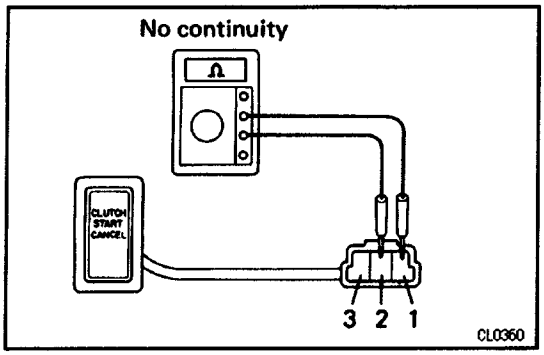

9. CHECK CONTINUITY OF CLUTCH START CANCEL SWITCH

(a) Check that there is no continuity when connect the positive (+) lead from the ohmmeter to terminal 2 and the negative (–) lead to terminal 1.

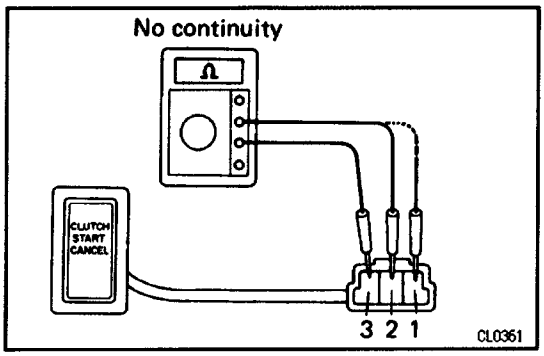

(b) Check that there is no continuity when connect the positive (+) lead from the ohmmeter to terminal 3 and the negative (–) lead to terminal 1.

(c) Check that there is no continuity between terminals 2 and 3.

If continuity is not as specified, replace the clutch start cancel switch.

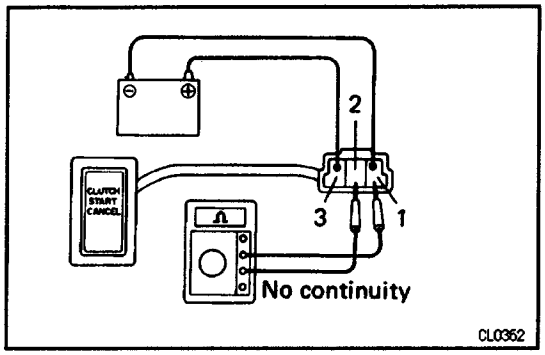

10. CHECK OPERATION OF CLUTCH START CANCEL SWITCH

(a) Connect positive (+) lead from the battery to terminal 3 and connect negative (–) lead to terminal 1.

(b) Check that there is no continuity when connect the positive (+) lead from the ohmmeter to terminal 2 and the negative (–) lead to terminal 1.

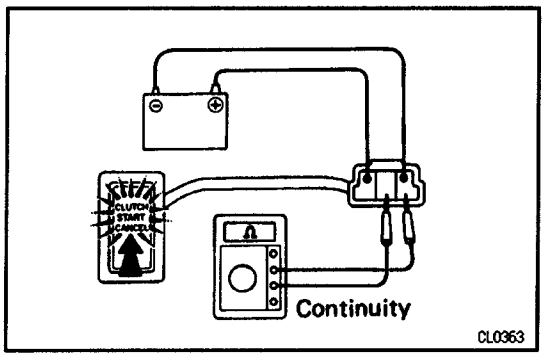

(c) When pushing the switch, check that the indicator light comes on and there is continuity between terminal 1 and 2.

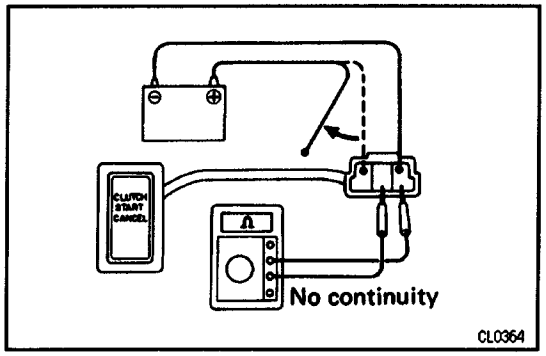

(d) Check that there is no continuity between terminals 1 and 2 when disconnect the battery lead.

If operation is not as specified, replace the clutch start cancel switch.

CLUTCH RELEASE CYLINDER

COMPONENTS

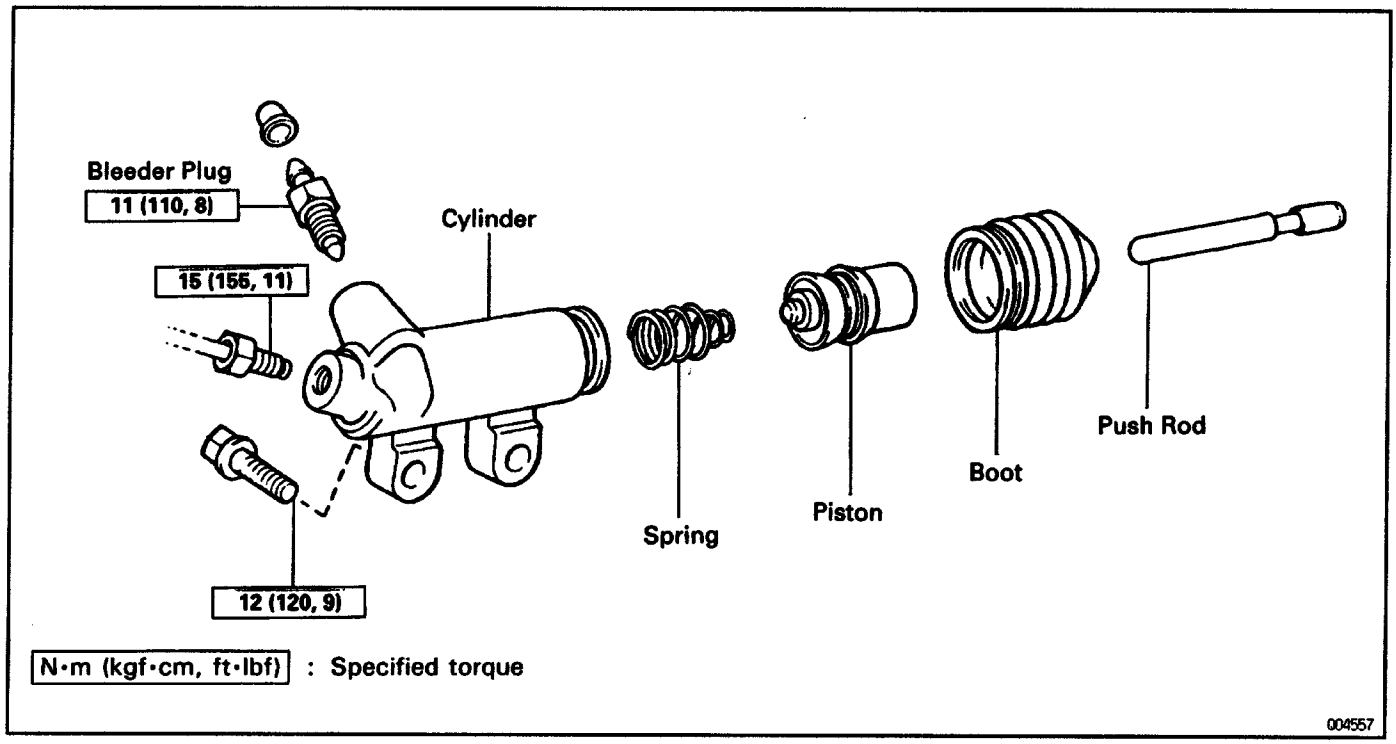

RELEASE CYLINDER REMOVAL

1. DISCONNECT CLUTCH LINE UNION

Using SST, disconnect the union.

SST 09023–00100

2. REMOVE 2 BOLTS AND PULL OFF RELEASE CYL–INDER

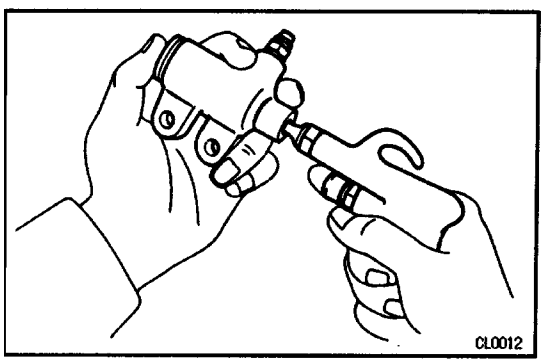

RELEASE CYLINDER DISASSEMBLY

1. PULL OUT PUSH ROD

2. REMOVE BOOT

3. REMOVE PISTON

RELEASE CYLINDER INSPECTION

HINT: Clean the disassembled parts with compressed air.

1. INSPECT RELEASE CYLINDER BORE FOR SCORING OR CORROSION

If a problem is found, clean or replace the cylinder.

2. INSPECT PISTON AND CUPS FOR WEAR, SCORING. CRACKS OR SWELLING

If either one requires replacement, use the parts from the cylinder kit.

3. INSPECT PUSH ROD FOR WEAR OR DAMAGE

If necessary, replace the push rod.

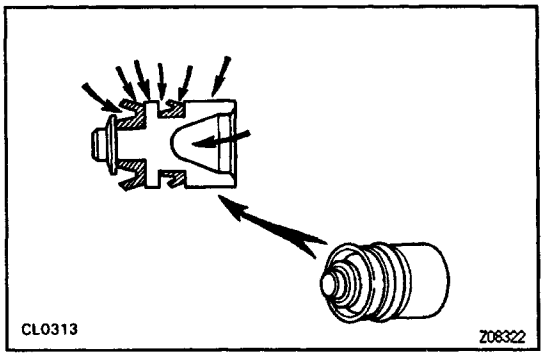

RELEASE CYLINDER ASSEMBLY

1. COAT PISTON WITH LITHIUM SOAP BASE GLYCOL GREASE, AS SHOWN

2. INSTALL PISTON

3. INSTALL BOOT AND INSERT PUSH ROD

RELEASE CYLINDER INSTALLATION

1. INSTALL RELEASE CYLINDER WITH 2 BOLTS

Torque: 12 N–m (120 kgf–cm. 9 ft–lbf)

2. CONNECT CLUTCH LINE UNION

Using SST, connect the union.

SST 09023 – 00100

Torque: 15 N–m (155 kgf–cm. 11 ft–lbf)

3. BLEED CLUTCH SYSTEM

(See page CL–6)

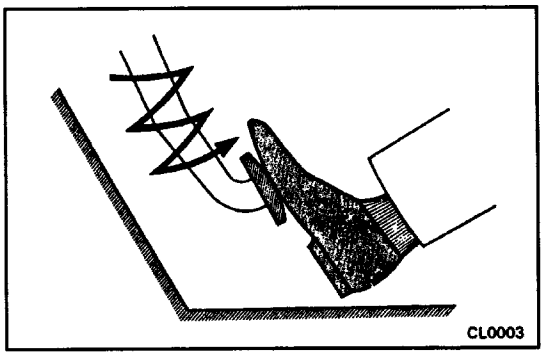

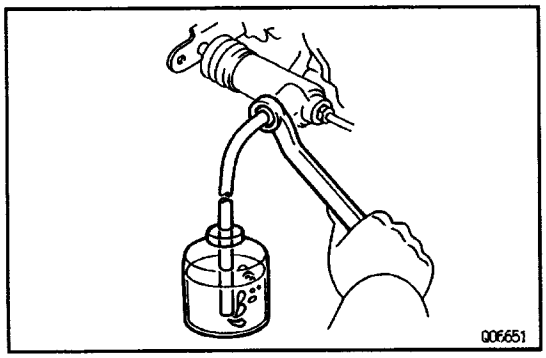

CLUTCH SYSTEM BLEEDING

HINT: If any work is done on the clutch system or if air is suspected in the clutch lines, bleed the system of air.

NOTICE: Do not let brake fluid remain on a painted surface. Wash it off Immediately.

1. FILL CLUTCH RESERVOIR WITH BRAKE FLUID

2. CONNECT VINYL TUBE TO BLEEDER PLUG

Insert the other end of the tube in a half–full container of brake fluid.

3. BLEED CLUTCH LINE

HINT: Check the reservoir frequently. Add fluid if necessary.

(a) Slowly pump the clutch pedal several times.

(b) While pressing on the pedal, loosen the bleeder plug until the fluid starts to run out. Then close the bleeder plug.

(c) Repeat this procedure until there are no more air bubbles in the fluid.

CLUTCH UNIT
COMPONENTS

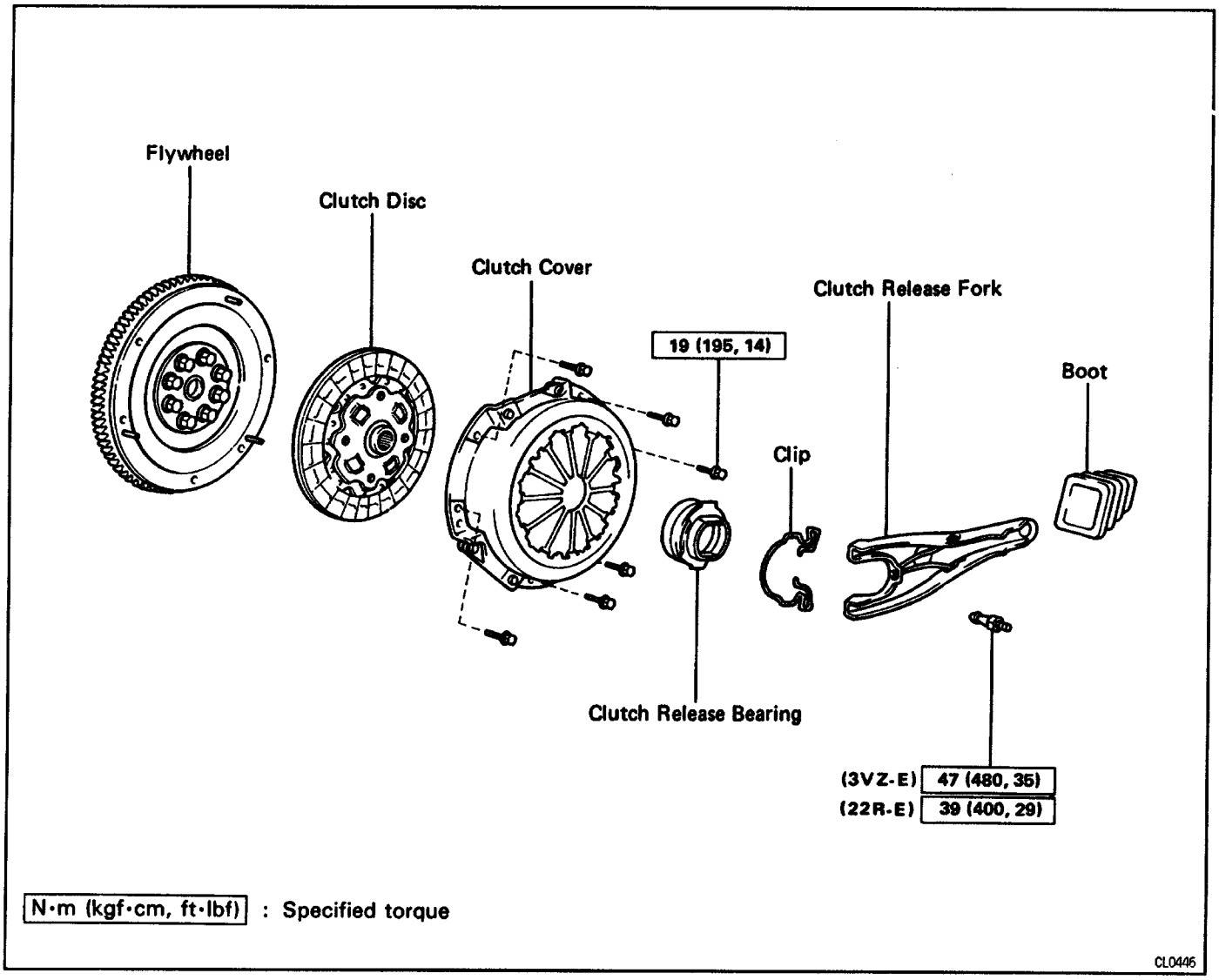

CLUTCH UNIT REMOVAL

1. REMOVE TRANSMISSION FROM ENGINE

(See page G58 MT1–8**, R150F** MT2–9, TR–8**)**

HINT: Do not drain the transmission oil.

2. REMOVE CLUTCH COVER AND DISC

(a) Place matchmarks on the clutch cover and flywheel.

(b) Loosen the set bolt one turn at a time until spring tension is released.

(c) Remove the set bolts and pull off the clutch cover and disc.

NOTICE: Do not drop the clutch disc.

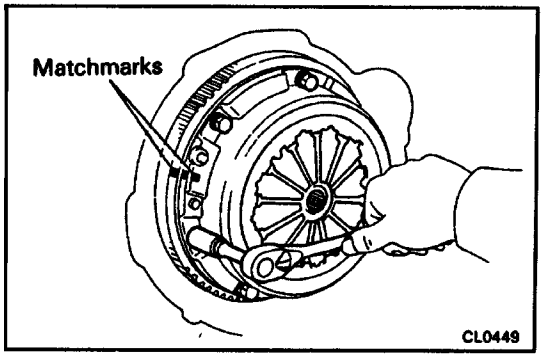

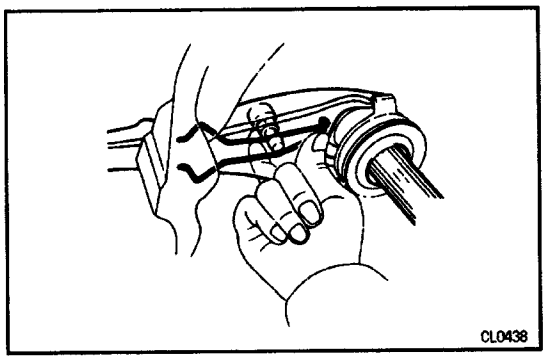

3. REMOVE BOOT, RELEASE BEARING AND PORK FROM TRANSMISSION

(a) Remove the retaining clip pull oft the bearing.

(b) Remove the fork and boot.

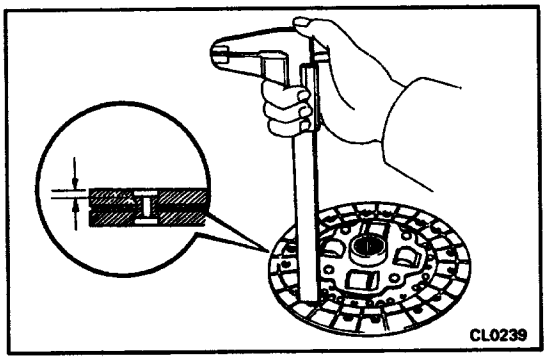

CLUTCH PARTS INSPECTION

1. INSPECT CLUTCH DISC FOR WEAR OR DAMAGE

Using calipers, measure the rivet head depth.

Minimum rivet depth:

0.3 mm (0.012 In.)

If a problem is found, repair or replace the clutch disc.

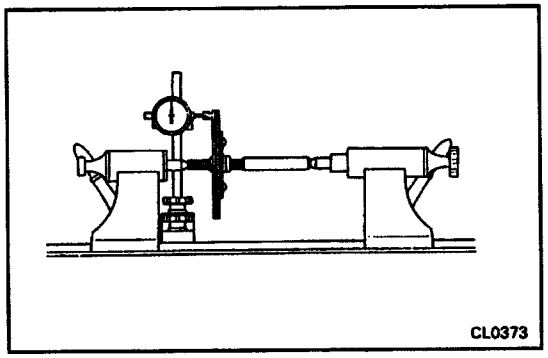

2. INSPECT CLUTCH DISC RUNOUT

Using a dial indicator, check the disc runout.

Maximum runout:

0.8 mm (0.031 In.)

If runout is excessive, replace the disc.

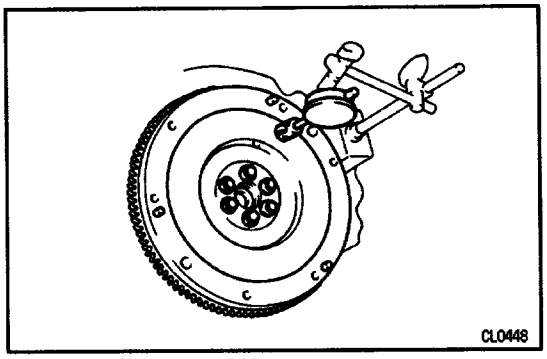

3. INSPECT FLYWHEEL RUNOUT

Using a dial indicator, check the flywheel runout.

Maximum runout:

0.1 mm (0.004 in.)

If runout is excessive, repair or replace flywheel.

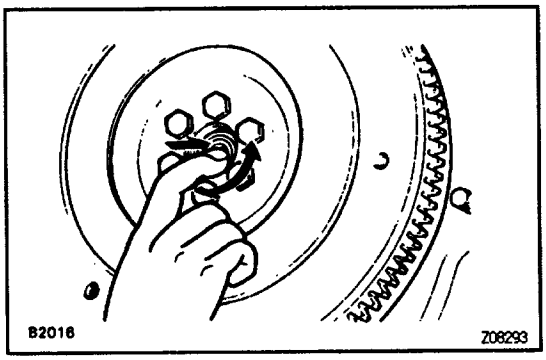

4. INSPECT PILOT BEARING

Turn the bearing by hand while applying force in the rotation direction.

It the bearing sticks or has much resistance, replace the pilot bearing.

HINT: The bearing is permanently lubricated and re quires no cleaning or lubrication.

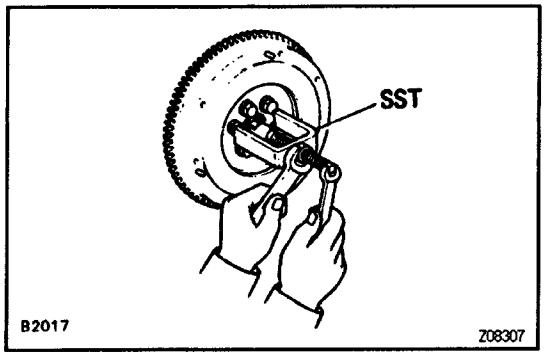

6. IF NECESSARY, REPLACE PILOT BEARING

(a) Using SST, remove the pilot bearing.
SST 09303–35011

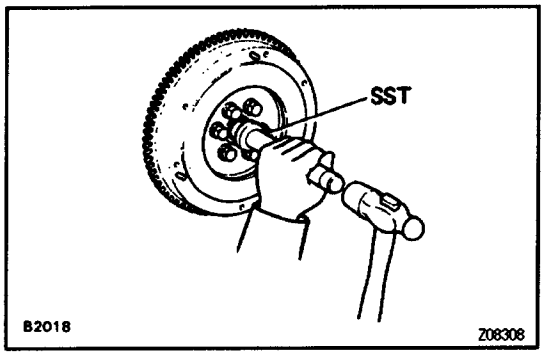

(b) Using SST and a hammer, install the pilot bearing.
SST 09304–30012

HINT: After assembling the pilot bearing to the hub, insure that it rotates smoothly.

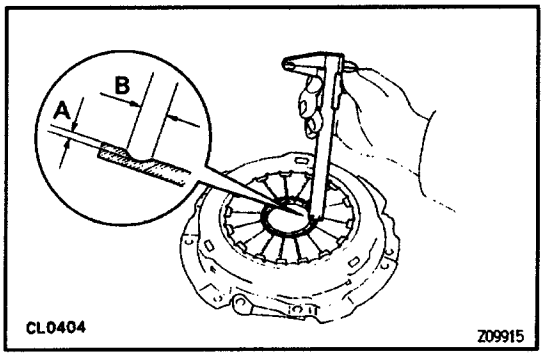

6. INSPECT DIAPHRAGM SPRING FOR WEAR

Using calipers, measure the diaphragm spring for depth and width of wear.

Maximum:

A: Depth 0.8 mm (0.024 in.)
B: Width 5.0 mm (0.197 in.)

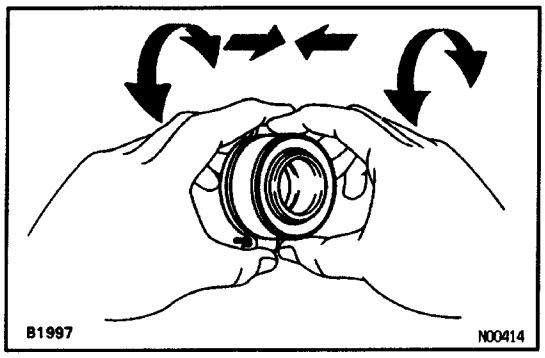

7. INSPECT RELEASE BEARING

Turn the bearing by hand while applying force in the rotation direction.

If the bearing sticks or has much resistance, replace the release bearing.

HINT: The bearing is permanently lubricated and requires no cleaning or lubrication.

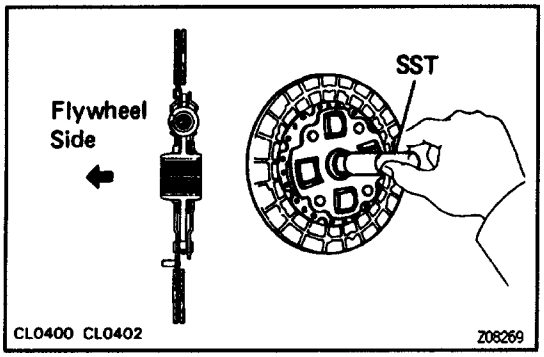

CLUTCH UNIT INSTALLATION

1. INSTALL DISC ON FLYWHEEL

Using SST, install the disc on the flywheel.
SST 09301–00110

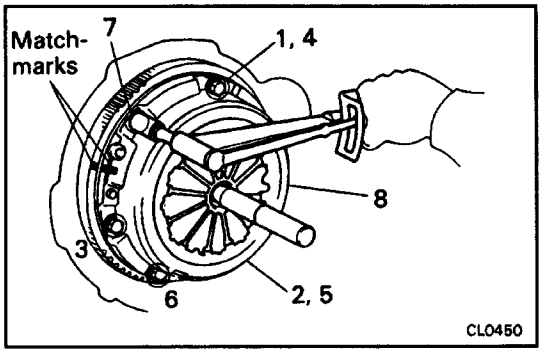

2. INSTALL CLUTCH COVER

(a) Align the matchmarks on the clutch cover and flywheel.

(b) Torque the bolts on the clutch cover in the order shown.

Torque: 19 N–m (195 kgf–cm, 14 ft–lbf)

HINT: Temporarily tighten the No.1 and No.2 bolts.

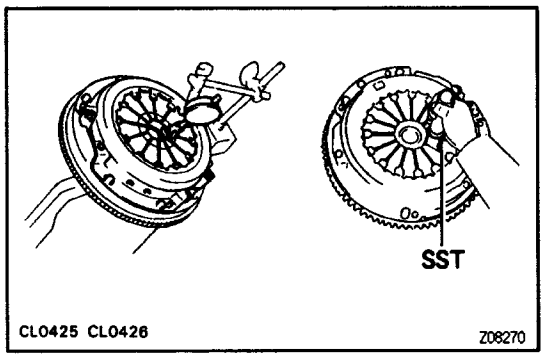

3. CHECK DIAPHRAGM SPRING TIP ALIGNMENT

Using a dial indicator with roller instrument, check the diaphragm spring tip alignment.

Maximum non–alignment:

0.5 mm (0.020 in.)

If alignment is not as specified, using SST, adjust the diaphragm spring tip alignment.

SST 09333–00013

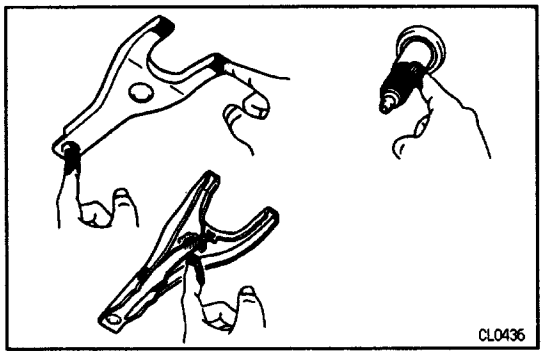

4. APPLY MOLYBDENUM DISULPHIDE LITHIUM BASE GREASE (NLGI NO.2) OR MP GREASE

(a) Apply release hub grease to the following parts.

- Release fork and hub contact point
- Release fork and push rod contact point
- Release fork pivot point

(b) Apply clutch spline grease.

- Clutch disc spline

HINT: Recommended grease pant number 08887–01706 (100 g)

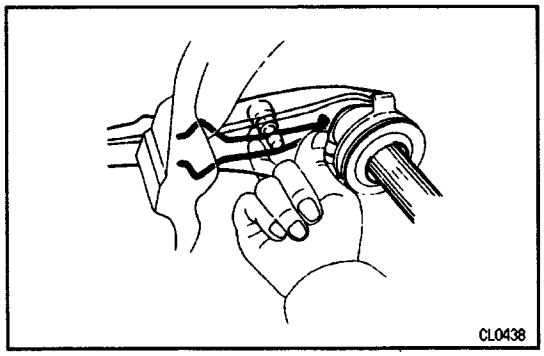

5. INSTALL BOOT, FORK, HUB AND BEARING ON TRANSMISSION

6. INSTALL TRANSMISSION

(See page G58 MT1–11**, R150F** MT2–12, TR–11**)**

CLUTCH

DESCRIPTION

The diaphragm spring turnover type providing lighter release performance.

CLUTCH ASSEMBLY

3VZ-E Engine

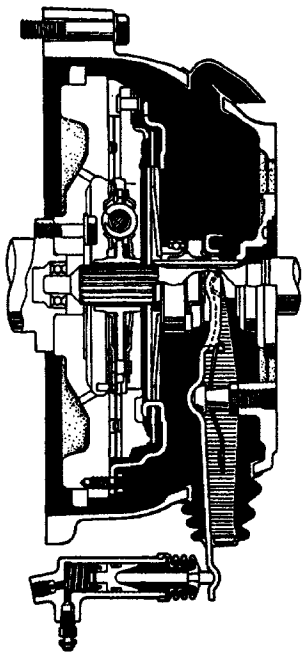

22R-E Engine

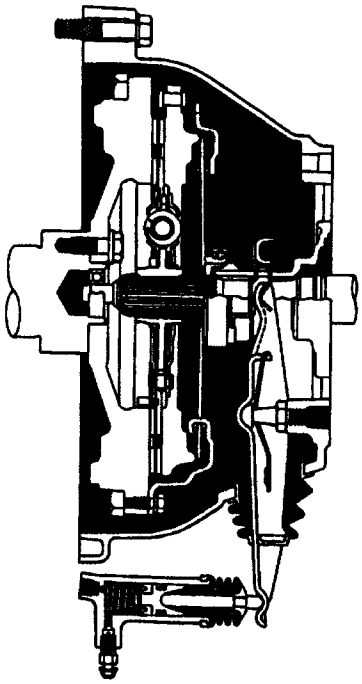

RELEASE CYLINDER

3VZ-E Engine

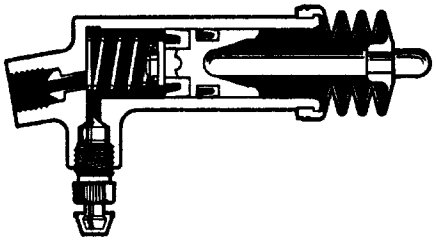

22R-E Engine

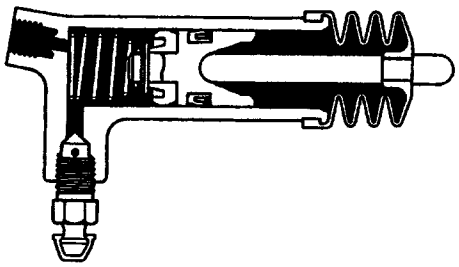

Q06741 Q06742
Q02461
Q06743

Z14384

MASTER CYLINDER

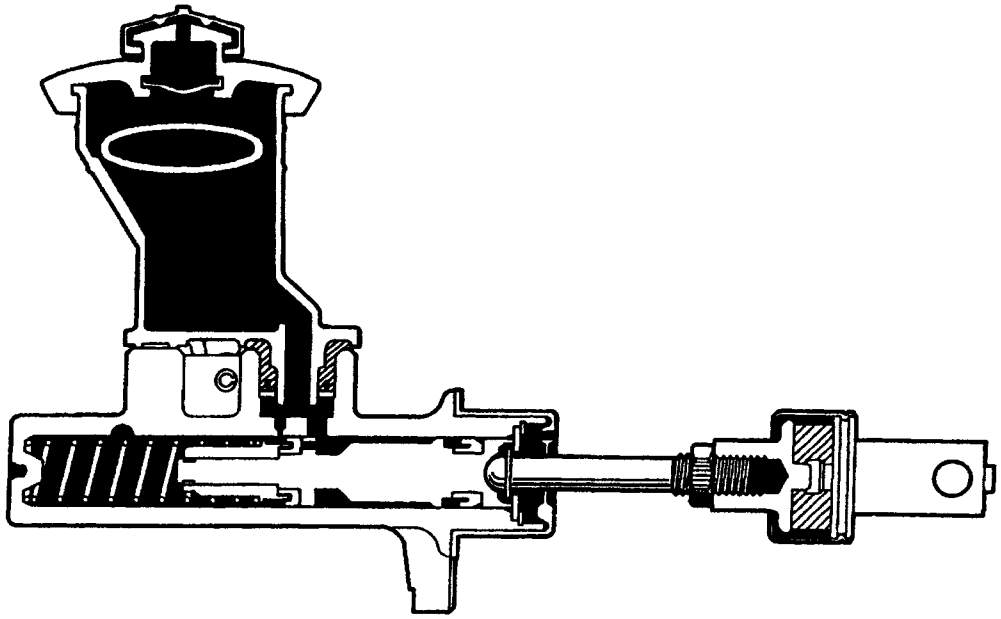

Q04484

PREPARATION

SST (SPECIAL SERVICE TOOLS)

	09023–00100	Union Nut Wrench 10 mm	Clutch line tube
	09301–00110	Clutch Guide Tool	
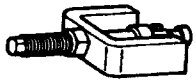	09303–35011	Input Shaft Front Bearing Puller	
	09304–30012	Input Shaft Front Bearing Replacer	
	09333–00013	Clutch Diaphragm Spring Aligner	

RECOMMENDED TOOLS

	09082–00050	TOYOTA Electrical Tester Set.	
	09905–00013	Snap Ring Pliers.	

EQUIPMENT

Calipers	
Dial indicator	
Torque wrench	

SERVICE SPECIFICATIONS

SERVICE DATA

Pedal height from floor panel	157.5 mm (6.201 in.)
Pedal height from asphalt sheet	151.5 mm (5.965 in.)
Push rod play at pedal top	1.0–5.0 mm (0.039–0.197 in.)
Pedal freeplay	5.0–15.0 mm (0.197–0.591 in.)
Clutch release point from pedal full stroke end position	25 mm (0.98 in.) or more
Disc rivet heed depth (Minimum)	0.3 mm (0.012 in.)
Disc runout (Maximum)	0.8 mm (0.031 in.)
Flywheel runout (Maximum)	0.1 mm (0.004 in.)
Diaphragm spring finger wear (Maximum depth)	0.6 mm (0.024 in.)
Diaphragm spring finger wear (Maximum width)	5.0 mm (0.197 in.)
Diaphragm spring tip non –alignment (Maximum)	0.5 mm (0.020 in.)

TORQUE SPECIFICATIONS

Part tightened		N·m	kgf·cm	ft·lbf
Clutch line union		15	155	11
Master cylinder installation nut		13	130	9
Bleeder plug		11	110	8
Clutch cover x Flywheel		19	195	14
Release cylinder installation bolt		12	120	9
Release fork support	3VZ–E	47	480	35
	22R–E	39	400	29

TROUBLESHOOTING

Use the table below to help you find the cause of the problem. The numbers indicate the priority of the likely cause of the problem. Check each part in order. If necessary, replace these parts.

Trouble \ Parts Name	Clutch pedal (Freeplay out of adjustment)	Clutch line (Air in line)	Master cylinder cup (Damaged)	Release cylinder cup (Damaged)	Engine mounting (Loosen)	Release bearing (Worn, dirty or damaged)	Input shaft bearing (Worn or damaged)	Clutch disc (Out of true)	Clutch disc (Runout is excessive)	Clutch disc (Lining broken)	Clutch disc (Dirty or burred)	Clutch disc (Oily)	Clutch disc (Worn out)	Clutch disc torsion rubber (Damaged)	Clutch disc (Harden)	Clutch disc (Lack of spline grease)	Diaphragm spring (Damaged)	Diaphragm spring (Out of tip alignment)	Pressure plate (Distortion)	Flywheel (Distortion)
See Page	CL–7	CL–6	CL–10	CL–13	–	CL–15	CL–15	CL–15	CL–15	CL–15	CL–15	CL–15	CL–15	CL–15	CL–15	CL–18	CL–15	CL–18	CL–15	–
Clutch grabs/chatters					1				2			2	2	2	2			2		
Clutch pedal spongy		1	2	2																
Clutch noisy						1	2							3						
Clutch slips	1											2	2				3		4	5
Clutch does not disengage	1	2	3	4			5	6	6	6	6	6				6	7	7	8	

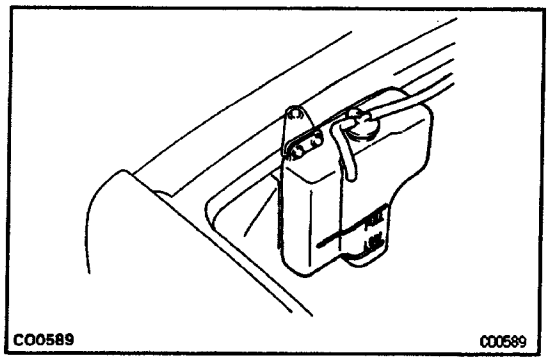

COOLANT CHECK AND REPLACEMENT

1. CHECK ENGINE COOLANT LEVEL IN RESERVOIR TANK

The coolant level should be between the ”LOW” and ”Full” lines.
If low, check for leaks and add coolant up to the ”FULL” line.

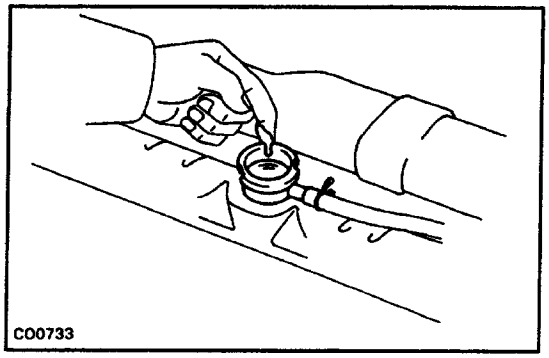

2. CHECK ENGINE COOLANT QUALITY

There should not be any excessive deposits of rust or scales around the radiator cap or radiator filler hole, and the coolant should be free from oil.
If excessively dirty, replace the coolant.

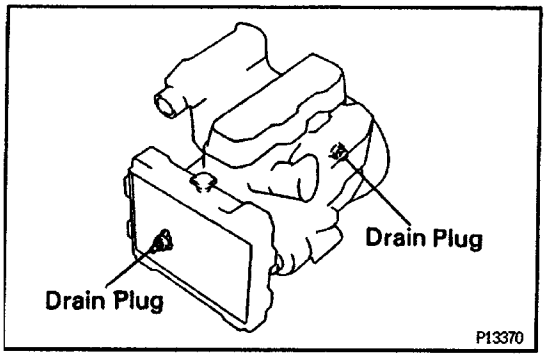

3. REPLACE ENGINE COOLANT

(a) Remove the radiator cap.
(b) Drain the coolant from the radiator and engine drain plugs.
(c) Close the drain plugs.
(d) Fill the system with coolant.

HINT:

- Use a good brand of ethylene–glycol base coolant, mixed according to the manufacturer’s instructions.
- Using coolant which has more than 50 96 ethylene–glycol (but not more than 70%) is recommended.

NOTICE:

- Do not use an alcohol type coolant.
- The coolant should be mixed with demineralized water or distilled water.

Coolant capacity (w/ heater or air conditioner):
Except 4WD A/T
8.4 liters (8.9 US qts. 7.4 Imp. qts)
4WD A/T
9.1 liters (9.6 US qts, 8.0 Imp. qts)

(e) Install the radiator cap.
(f) Start the engine and check for leaks.
(g) Recheck the coolant level and refill as necessary.

COOLING SYSTEM

DESCRIPTION

This engine utilizes a pressurized water faced circulation cooling system which includes a thermostat mounted on the outlet side.

OPERATION

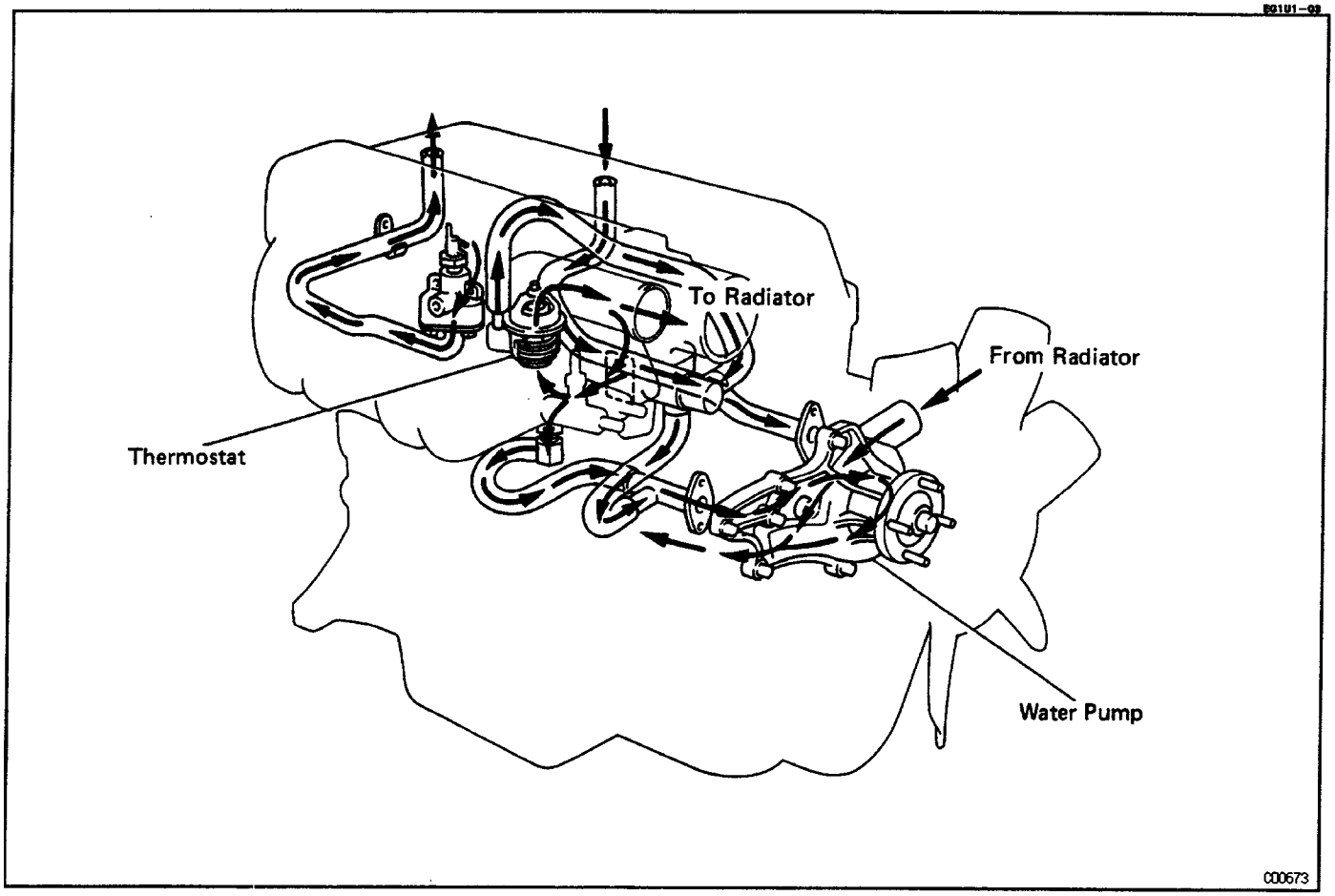

RADIATOR CAP

The radiator cap is a pressure type cap which seals the radiator, resulting in pressurization of the radiator as the coolant expands. The pressurization prevents the coolant from boiling even when the coolant temperature exceeds 100˚C (212˚ F). A relief valve (pressurization valve) and a vacuum valve (negative pressure valve) are built into the radiator cap. When the pressure generated inside the cooling system exceeds the limit (coolant temperature: 110–120˚C (230– 248˚F) pressure: 58.8–103.0 kPa (0.6–1.05 kgf/cm2, 8.5–14.9 psi) the relief valve is opened by the pressure and lets steam escape through the pipe. The vacuum valve opens to allow atmospheric air to enter to alleviate the vacuum which develops in the cooling system after the engine is stopped and the coolant temperature drops.

COOLING SYSTEM

DESCRIPTION

This engine utilizes a pressurized water faced circulation cooling system which includes a thermostat mounted on the outlet side.

OPERATION

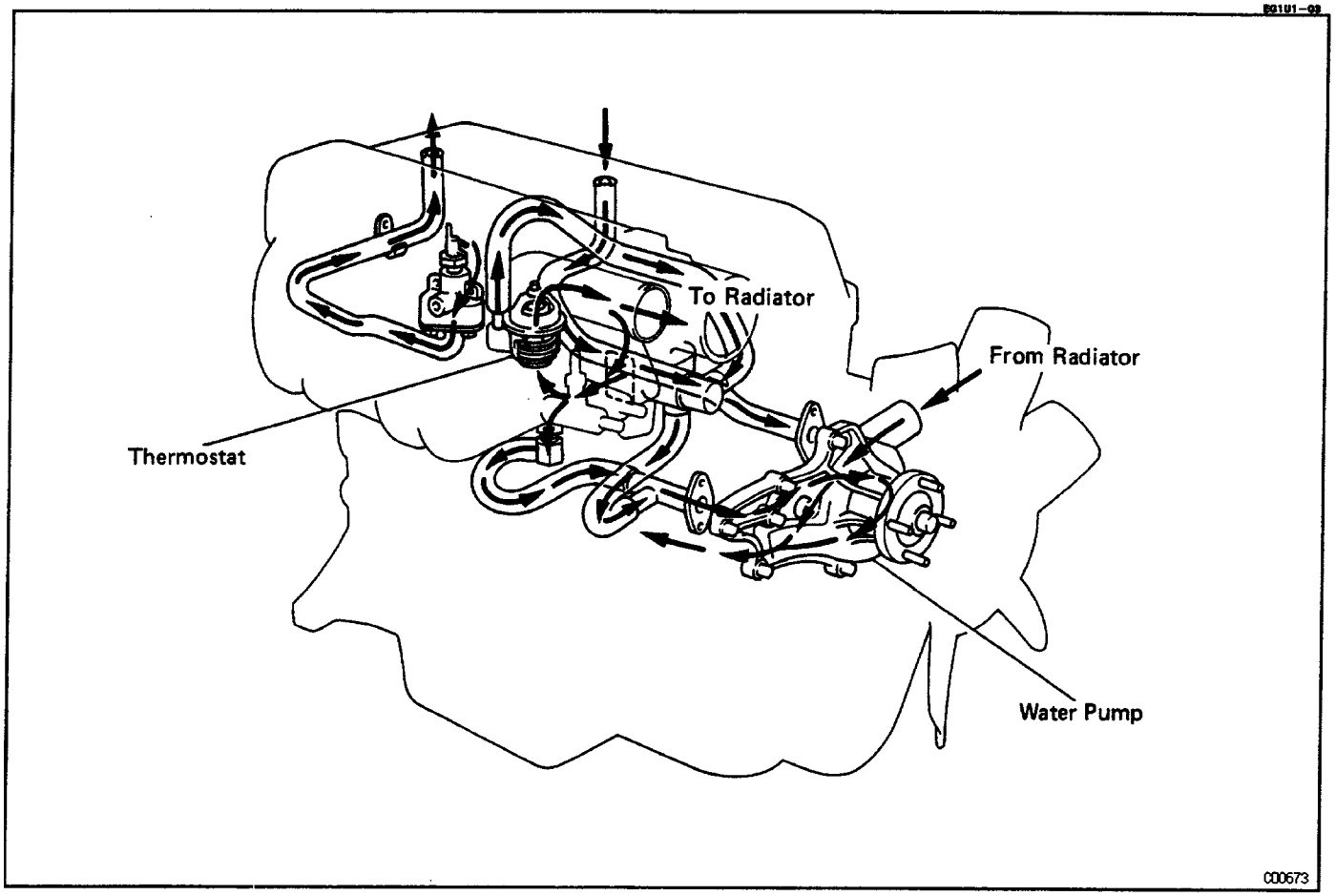

RADIATOR CAP

The radiator cap is a pressure type cap which seals the radiator, resulting in pressurization of the radiator as the coolant expands. The pressurization prevents the coolant from boiling even when the coolant temperature exceeds 100˚C (212˚ F). A relief valve (pressurization valve) and a vacuum valve (negative pressure valve) are built into the radiator cap. When the pressure generated inside the cooling system exceeds the limit (coolant temperature: 110–120˚C (230– 248˚F) pressure: 58.8–103.0 kPa (0.6–1.05 kgf/cm2, 8.5–14.9 psi) the relief valve is opened by the pressure and lets steam escape through the pipe. The vacuum valve opens to allow atmospheric air to enter to alleviate the vacuum which develops in the cooling system after the engine is stopped and the coolant temperature drops.

RESERVOIR TANK

The reservoir tank is used to catch coolant which overflows the cooling system as a result of volumetric expansion when the coolant is heated. When the coolant temperature drops, the coolant in the reservoir tank returns to the radiator, thus keeping the radiator full at all times and avoiding needless coolant loss. To find out if the coolant needs to be replenished, check the reservoir tank level.

WATER PUMP

The water pump is used for forced circulation of coolant through the cooling system. It is mounted on the front of the timing chain cover and driven by a V belt.

THERMOSTAT

The thermostat is a wax type and is mounted in the water outlet housing. The thermostat includes a type of automatic valve operated by fluctuations in the coolant temperature. When the coolant temperature drops, the valve closes, preventing the circulation of coolant through the radiator and thus permitting the engine to warm up rapidly. When the coolant temperature has risen, the valve opens, allowing the coolant in the engine to circulate through the radiator. Wax inside the thermostat expands when heated and contracts when cooled. Heating the wax thus generates pressure which overpowers the force of the spring which keeps the valve closed, thus opening the valve. When the wax cools, its contraction allows the force of the spring to take effect once more, closing the valve. ~ The thermostat in this engine operates at a temperature of 88* C (190˚ F). .

PREPARATION

RECOMMENDED TOOLS

	**09082–00050** TOYOTA Electrical Tester Set.	

EQUIPMENT

Heater	
Radiator cap tester	
Thermometer	
Torque wrench	

RESERVOIR TANK

The reservoir tank is used to catch coolant which overflows the cooling system as a result of volumetric expansion when the coolant is heated. When the coolant temperature drops, the coolant in the reservoir tank returns to the radiator, thus keeping the radiator full at all times and avoiding needless coolant loss. To find out if the coolant needs to be replenished, check the reservoir tank level.

WATER PUMP

The water pump is used for forced circulation of coolant through the cooling system. It is mounted on the front of the timing chain cover and driven by a V belt.

THERMOSTAT

The thermostat is a wax type and is mounted in the water outlet housing. The thermostat includes a type of automatic valve operated by fluctuations in the coolant temperature. When the coolant temperature drops, the valve closes, preventing the circulation of coolant through the radiator and thus permitting the engine to warm up rapidly. When the coolant temperature has risen, the valve opens, allowing the coolant in the engine to circulate through the radiator. Wax inside the thermostat expands when heated and contracts when cooled. Heating the wax thus generates pressure which overpowers the force of the spring which keeps the valve closed, thus opening the valve. When the wax cools, its contraction allows the force of the spring to take effect once more, closing the valve. ~ The thermostat in this engine operates at a temperature of 88* C (190˚ F). .

PREPARATION

RECOMMENDED TOOLS

	**09082–00050** TOYOTA Electrical Tester Set.	

EQUIPMENT

Heater	
Radiator cap tester	
Thermometer	
Torque wrench	

RADIATOR

RADIATOR CLEANING

Using water or a steam cleaner, remove mud and dirt from the radiator core.

NOTICE: If using a high–pressure type cleaner, be careful not to deform the fins of the radiator core. For example, keep a distance of more than 40–50 cm (15.75–19.69 in.) between the radiator core and cleaner nozzle when the cleaner nozzle pressure is 2,942–3,432 kPa (30–35 kgf/cm2, 427–498 psi).

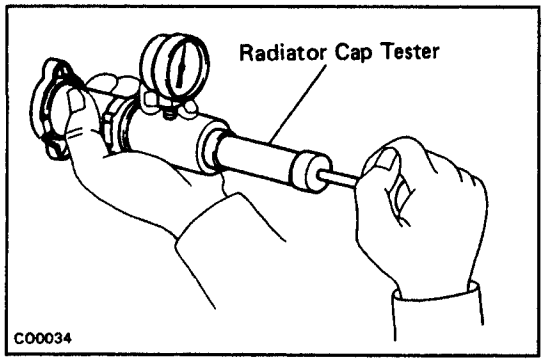

RADIATOR INSPECTION

1. CHECK RADIATOR CAP

Using radiator cap tester, pump the tester until the relief valve opens. Check that the valve opens between 174 kPa (0.75 kgf/cm2, 10.7 psi) and 103 kPa (1.05 kgf/cm2, 14.9 psi).

Check that pressure gauge does not drop rapidly when pressure on cap is below 59 kPa (0.6 kgf/cm2, 8.5 psi).

If either check is not within limit, replace the radiator cap.

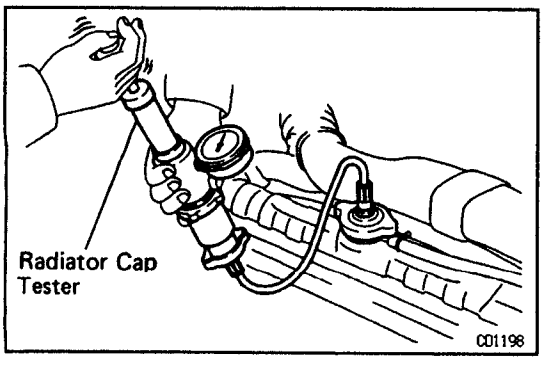

2. CHECK COOLING SYSTEM FOR LEAKS

(a) Fill the radiator with coolant and attach a radiator cap tester.

(b) Warm up the engine.

(c) Pump it to 118 kPa (1.2 kgf/cm2, 17.1 psi), and check that the pressure does not drop.

If the pressure drops, check for leaks from the hoses, radiator or water pump. If no external leaks are found, check the heater core, block and intake manifold.

RADIATOR REMOVAL

1. DRAIN COOLANT

2. REMOVE ENGINE UNDER COVER

3. REMOVE AIR INTAKE CONNECTOR

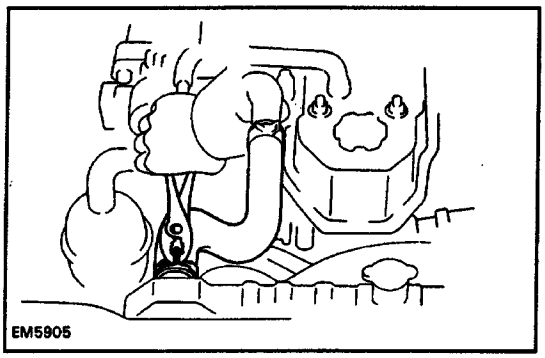

4. REMOVE RADIATOR

(a) Disconnect the reservoir hose.

(b) Remove the radiator hoses.

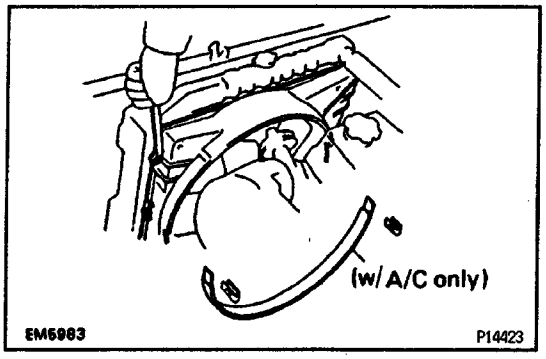

(c) w/ A/C:

Remove the No. 2 fan shroud.

(d) Remove the No. 1 fan shroud.

(e) A/T:

Disconnect the oil cooler hoses.

HINT:

Be careful as some oil will leak out. Catch it in a suitable container.

Plug the hose to prevent oil from escaping.

(f) Remove the 4 bolts and radiator.

SERVICE SPECIFICATIONS

SERVICE DATA

Thermostat	Valve opening temperature Valve lift at 100 °C (212 °F)	86 – 90 °C (187 – 194 °F) 8 mm (0.31in.) or morter
Radiator	Relief valve opening pressure STD Minimum	74 – 103 kPa 0.75 – 1.05 kgf/cm² 10.7 – 14.9 psi 59 kPa 0.6 kgf/cm² 8.5 psi

TORQUE SPECIFICATIONS

Part tightened	N·m	kgf·cm	ft·lbf
Water outlet x Intake manifold	13	130	9

RADIATOR REMOVAL

1. DRAIN COOLANT

2. REMOVE ENGINE UNDER COVER

3. REMOVE AIR INTAKE CONNECTOR

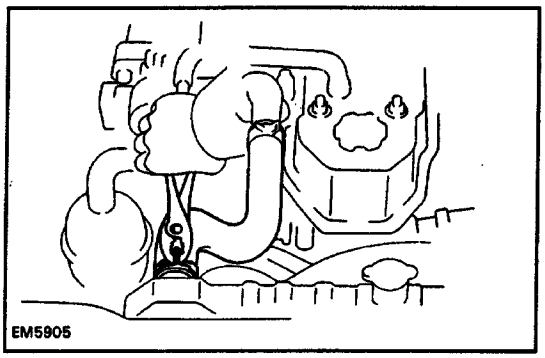

4. REMOVE RADIATOR

(a) Disconnect the reservoir hose.

(b) Remove the radiator hoses.

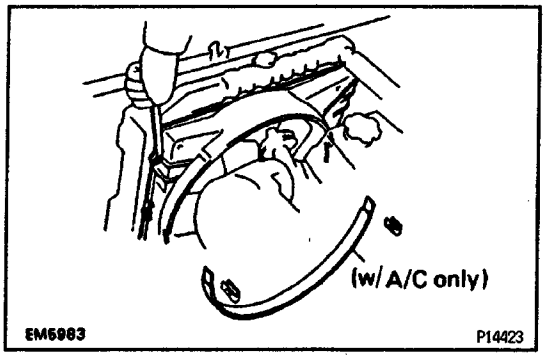

(c) w/ A/C:

Remove the No. 2 fan shroud.

(d) Remove the No. 1 fan shroud.

(e) A/T:

Disconnect the oil cooler hoses.

HINT:

Be careful as some oil will leak out. Catch it in a suitable container.

Plug the hose to prevent oil from escaping.

(f) Remove the 4 bolts and radiator.

SERVICE SPECIFICATIONS

SERVICE DATA

Thermostat	Valve opening temperature Valve lift at 100 °C (212 °F)	86 – 90 °C (187 – 194 °F) 8 mm (0.31in.) or morter
Radiator	Relief valve opening pressure STD Minimum	74 – 103 kPa 0.75 – 1.05 kgf/cm² 10.7 – 14.9 psi 59 kPa 0.6 kgf/cm² 8.5 psi

TORQUE SPECIFICATIONS

Part tightened	N·m	kgf·cm	ft·lbf
Water outlet x Intake manifold	13	130	9

THERMOSTAT

THERMOSTAT REMOVAL

1. DRAIN COOLANT

2. DISCONNECT THESE HOSES:

(a) Vacuum hoses

(b) PCV hose

(c) w/ A/C:

Idle–up hose

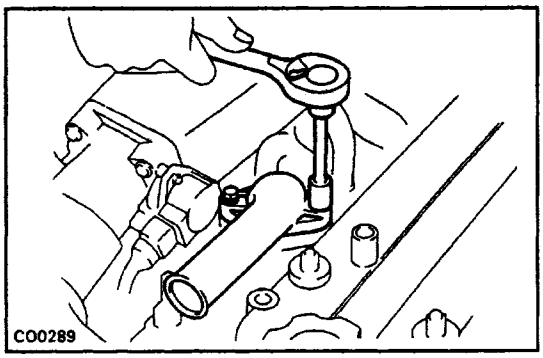

3. DISCONNECT RADIATOR INLET HOSE

4. REMOVE THERMOSTAT

(a) Remove the 2 bolts and water outlet from the intake manifold.

(b) Remove the thermostat with the gasket.

(c) Remove the gasket from the thermostat.

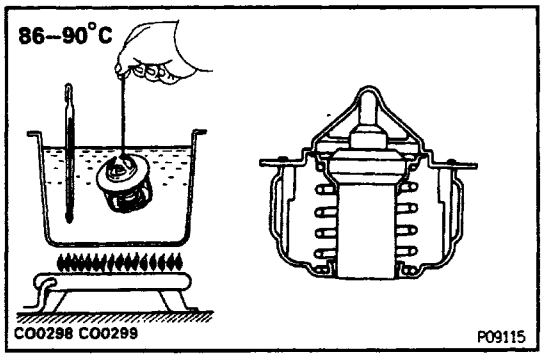

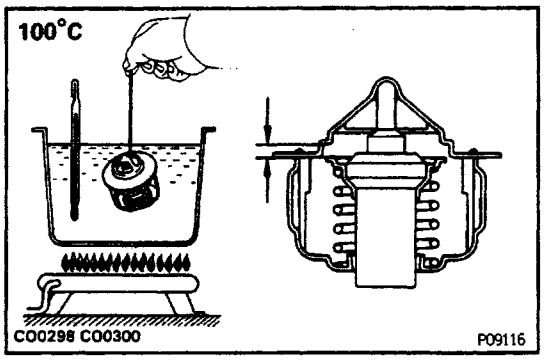

THERMOSTAT INSPECTION

HINT: The thermostat is numbered according to the valve opening temperature.

(a) Immerse the thermostat in water and heat the water gradually.

(b) Check the valve opening temperature and valve lift.

Valve opening temperature:

86 – 90°C (187 – 194°F)

Valve lift:

At 100°C (212°F): 8 mm (0.31 in.) or more

If the valve opening temperature and valve lift are not within specifications, replace the thermostat.

(c) Check that the valve spring is tight when the thermostat is fully closed, and replace if it is not tight.

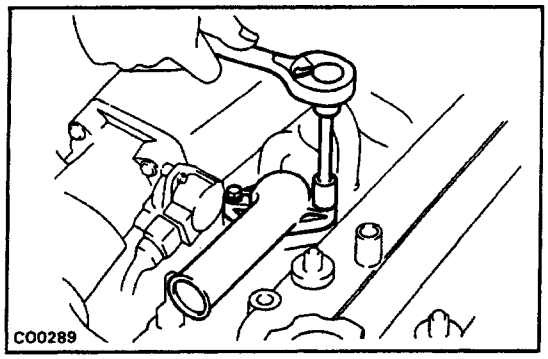

THERMOSTAT INSTALLATION

1. PLACE THERMOSTAT IN INTAKE MANIFOLD

(a) Place a new gasket to the thermostat.

(b) Install the thermostat to the intake manifold.

(c) Install the water outlet with the 2 bolts.

Torque: 19 N–m (195 kgf–cm, 14 ft–lbf)

2. CONNECT RADIATOR INLET HOSE

3. CONNECT THESE HOSES:

(a) w/ A/C:

idle–up hose

(b) PCV hose

(c) Vacuum hoses

4. FILL WITH COOLANT

5. START ENGINE AND CHECK FOR LEAKS

WATER PUMP
COMPONENTS

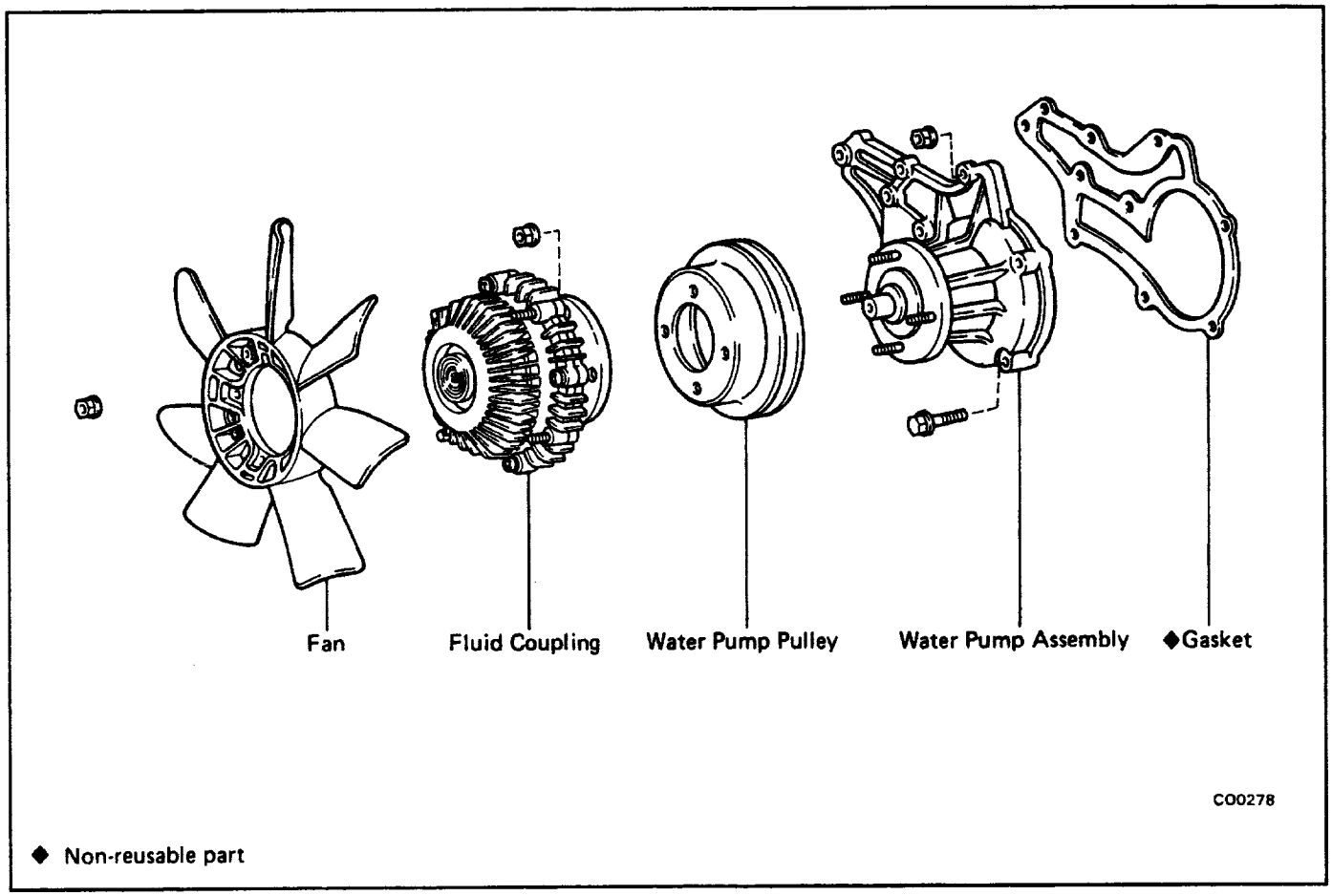

WATER PUMP REMOVAL

1. DRAIN COOLANT
(in coolant check and replacement)
2. w/ PS:
REMOVE PS BELT
3. w/ A/C:
REMOVE A/C BELT
4. REMOVE FLUID COUPLING WITH FAN AND WATER PUMP PULLEY
(in timing chain removal in timing chain in Engine Mechanical)

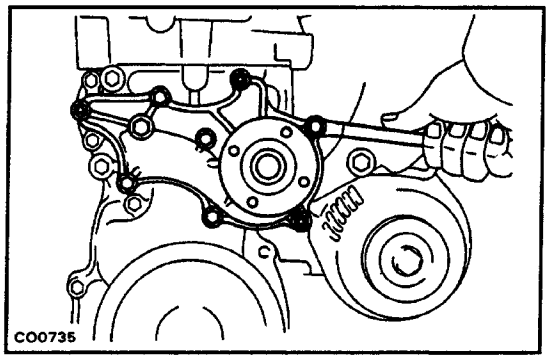

5. REMOVE WATER PUMP

Remove the 6 bolts, 3 nuts, water pump and gasket.

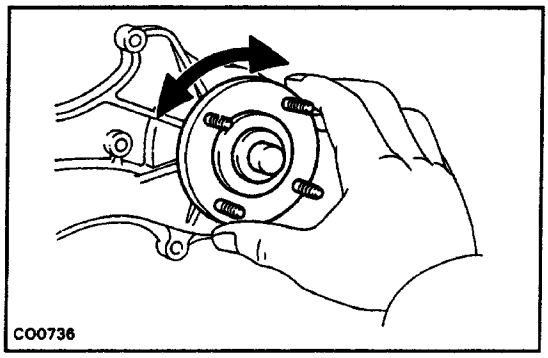

WATER PUMP INSPECTION

1. INSPECT WATER PUMP BEARING

Check that the water pump bearing moves smoothly and quietly.

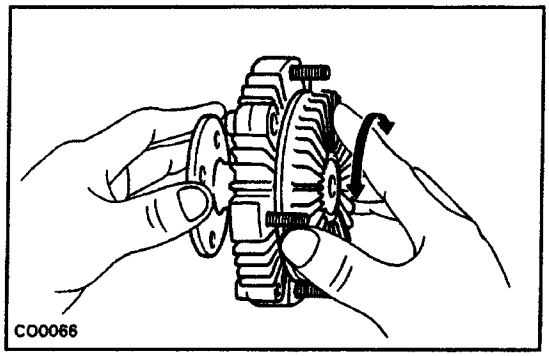

2. INSPECT FLUID COUPLING

Check the fluid coupling for damage and silicone oil leakage.

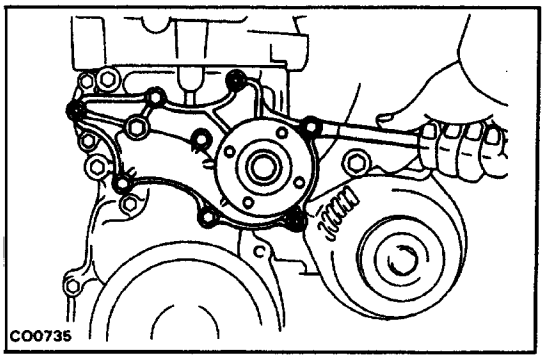

WATER PUMP INSTALLATION

(See Components for Removal and Installation)

1. INSTALL WATER PUMP OVER NEW GASKET

Install the water pump and a new gasket with the 6 bolts and 3 nuts.

2. INSTALL WATER PUMP PULLEY AND FLUID COUPLING WITH FAN

(See step 9 in timing chain installation in timing chain in Engine Mechanical)

3. w/ A/C:

INSTALL A/C BELT

(See maintenance operations in Maintenance)

4. w/ PS:

INSTALL PS BELT

(See maintenance operations in Maintenance)

5. REFILL COOLANT

(See coolant check and replacement)

EXHAUST GAS RECIRCULATION (EGR) SYSTEM (California)

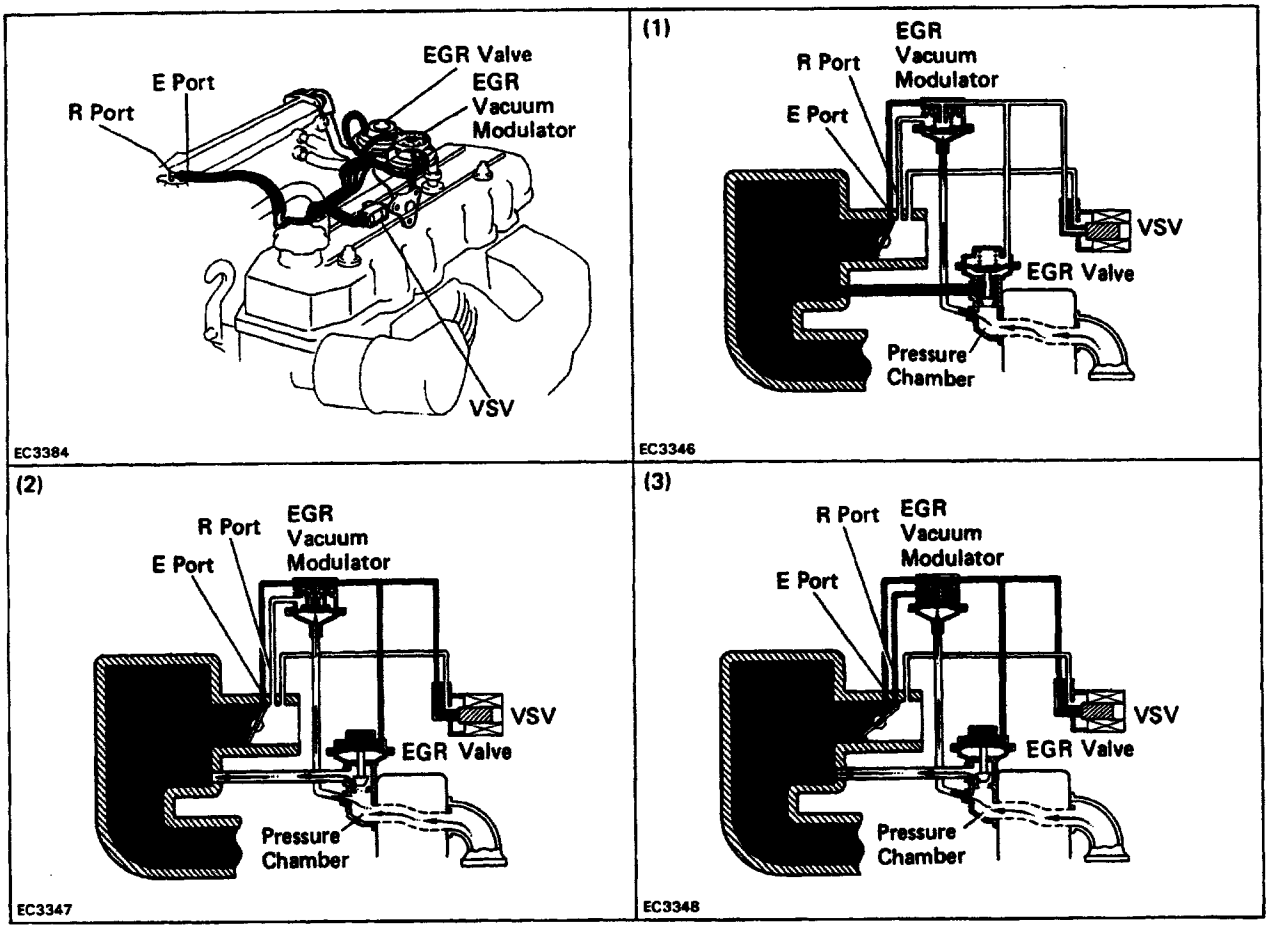

To reduce NOx emission, part of the exhaust gases are recirculated through the EGR valve to the intake manifold to lower the maximum combustion temperature.

Coolant Temp.	Driving Condition	VSV	Throttle Valve Opening Angle	Pressure in the EGR Valve Pressure Chamber		EGR Vacuum Modulator	EGR Valve	Exhaust Gas
Below 34°C (93°F)	—	ON	—	—		—	CLOSED	Not recirculated
Above 40°C (104°F)	Low load	ON	—	—		—	CLOSED	Not recirculated
	Heavy load, etc.	OFF	Positioned below E port	—		—	CLOSED	Not recirculated
			Positioned between E port and R port	(1) LOW	*Pressure constantly alternating between low and high	OPENS passage to atmosphere	CLOSED	Not recirculated
				(2) HIGH		CLOSES passage to atmosphere	OPEN	Recirculated
			Positioned above R port	(3) HIGH	**	CLOSES passage to atmosphere	OPEN	Recirculated (increase)

Remarks: * Pressure increases→Modulator closes→EGR valve opens→Pressure drops
↑ EGR valve closes←Modulator opens←

**When the throttle valve is positioned above the R port, the EGR vacuum modulator will close the atmosphere passage and open the EGR valve to increase the EGR gas, even if the exhaust pressure is insufficiently low.

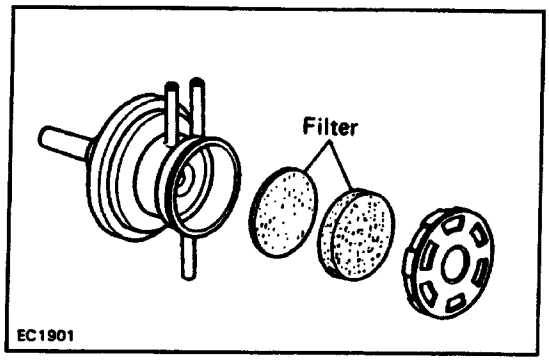

EGR SYSTEM INSPECTION

1. CHECK AND CLEAN FILTER IN EGR VACUUM MODULATOR

(a) Check the filter for contamination or damage.

(b) Using compressed air, clean the filter.

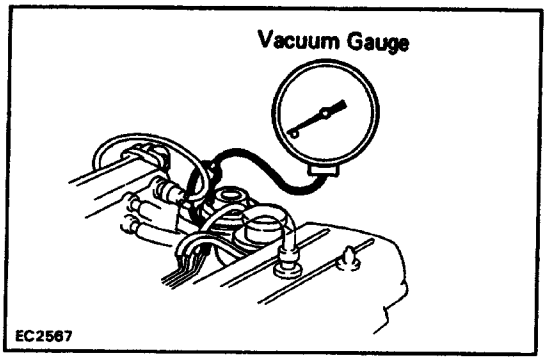

2. PREPARATION

Disconnect the vacuum hose from the EGR valve, and using a three way union, connect a vacuum gauge to it.

3. CHECK SEATING OF EGR VALVE

Start the engine and check that the engine starts and runs at idle.

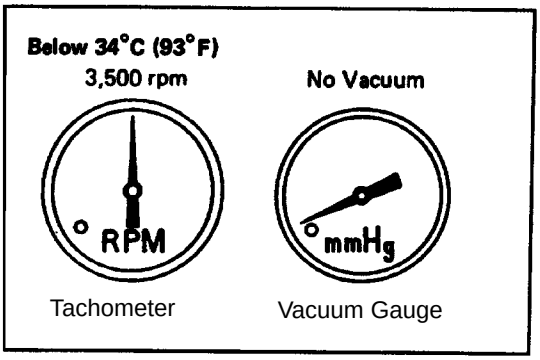

4. CHECK VSV WITH COLD ENGINE

(a) The coolant temperature should be below 34°C (93° F).

(b) Check that the vacuum gauge indicates zero at 3,500 rpm.

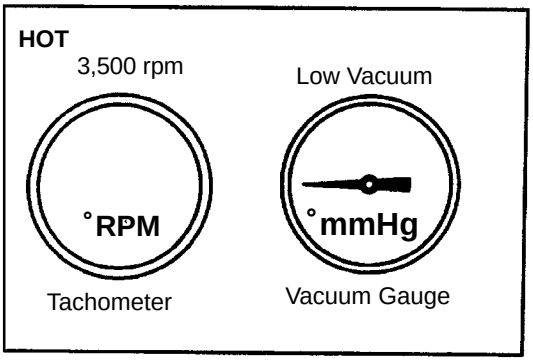

5. CHECK VSV AND EGR VACUUM MODULATOR WITH HOT ENGINE

(a) Warm up the engine.

(b) Check that the vacuum gauge indicates low vacuum at 3,500 rpm.

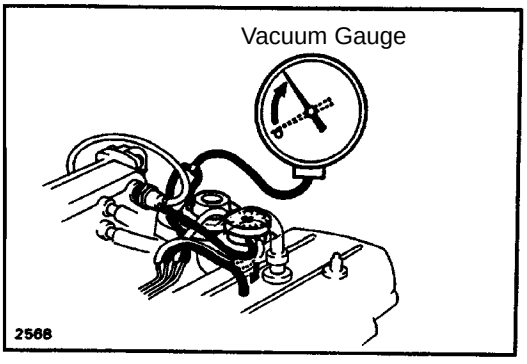

(c) Disconnect the vacuum hose from port R of the EGR vacuum modulator and connect port R directly to the intake manifold with another hose.

(d) Check that the vacuum gauge indicates high vacuum at 3.000 rpm.

HINT: As exhaust gas is increasingly recirculated the engine will start to misfire.

(e) Disconnect the vacuum gauge and reconnect the vacuum hoses to the proper locations.

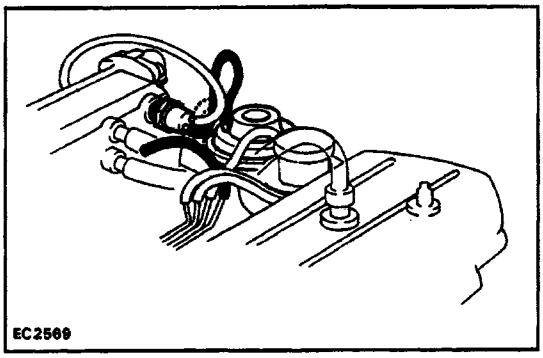
EC2569

6. CHECK EGR VALVE

(a) Apply vacuum directly to the EGR valve with the engine idling.

(b) Check that the engine runs rough or dies.

(c) Reconnect the vacuum hoses to the proper locations.

IF NO PROBLEM IS FOUND WITH THIS INSPECTION, THE SYSTEM IS OKAY; OTHERWISE INSPECT EACH PART

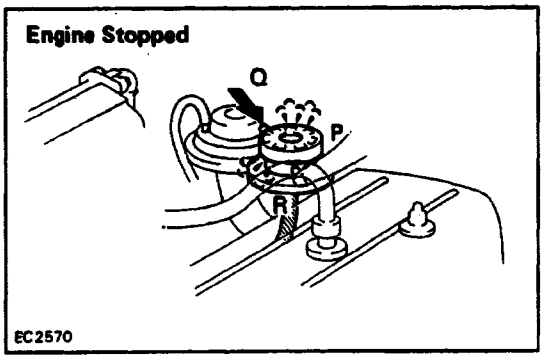

EC2570

EGR VACUUM MODULATOR INSPECTION CHECK EGR VACUUM MODULATOR OPERATION

(a) Disconnect the 2 vacuum hoses from ports P. Q and R of the EGR vacuum modulator.

(b) Plug ports P and R with your finger.

(c) Blow air into port Q. Check that the air passes through to the air filter side freely.

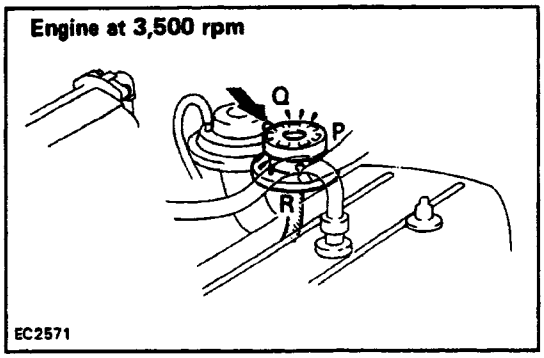

EC2571

(d) Start the engine and maintain the speed at 3,500 rpm.

(e) Repeat the above test. Check that there is a strong resistance to air flow.

(f) Reconnect the vacuum hoses to the proper locations.

VSV INSPECTION

1. CHECK VACUUM CIRCUIT CONTINUITY IN THE VSV BY BLOWING AIR INTO PIPE

(a) Connect the VSV terminals to the battery terminals as illustrated.

(b) Blow air into a pipe and check that the VSV is open.

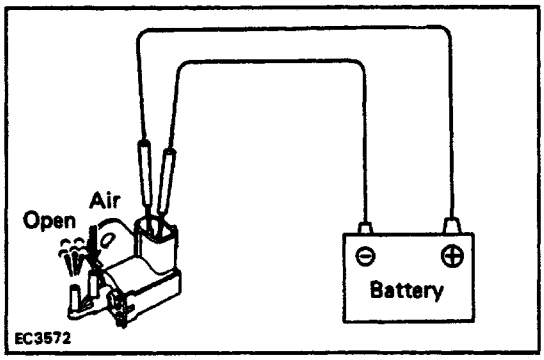

EC3572

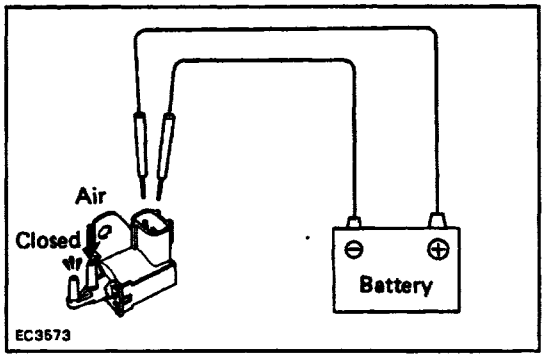

EC3573

(c) Disconnect the battery form the VSV.

(d) Blow air into a pipe and check that VSV is closed.

If a problem is found, replace the VSV.

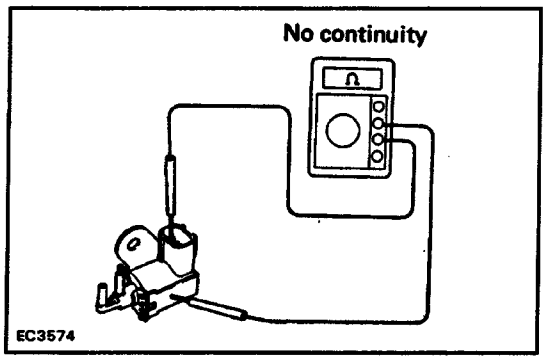

2. CHECK FOR SHORT CIRCUIT

Using an ohmmeter, check that there is no continuity between the terminals and the VSV body.

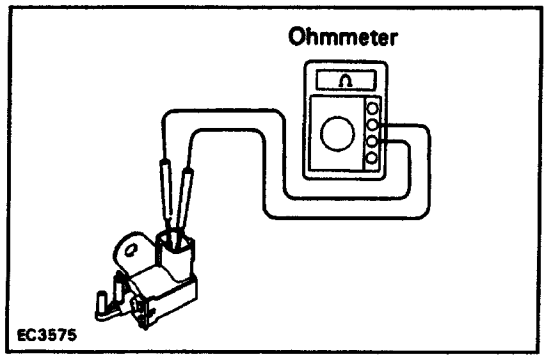

3. CHECK FOR OPEN CIRCUIT

Using an ohmmeter, measure the resistance between the terminals.

Specified resistance:
At 20–C (68–F): 30 – 50 0

If the resistance is not within specification, replace the VSV.

EGR VALVE INSPECTION

1. REMOVE EGR VALVE

Check the valve for sticking and heavy carbon deposits. If a problem is found, replace it.

2. INSTALL EGR VALVE WITH NEW GASKET

EXHAUST GAS RECIRCULATION (EGR) SYSTEM (Federal and Canada)

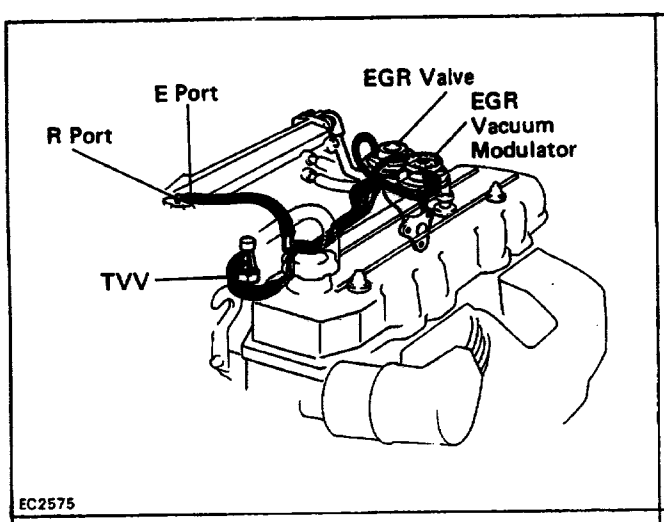

(1)

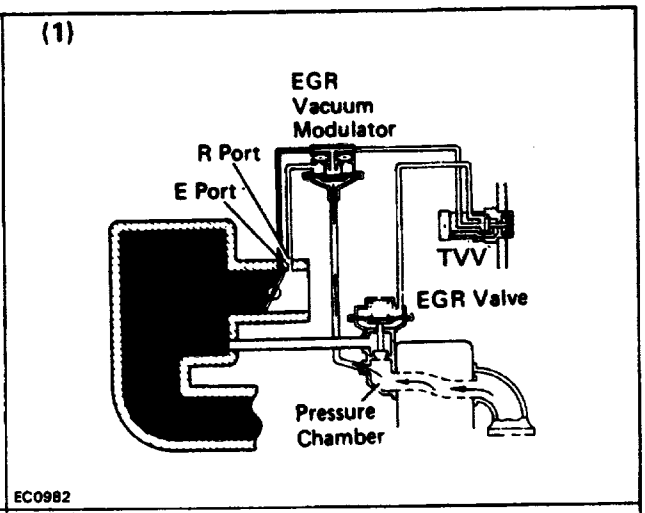

(2)

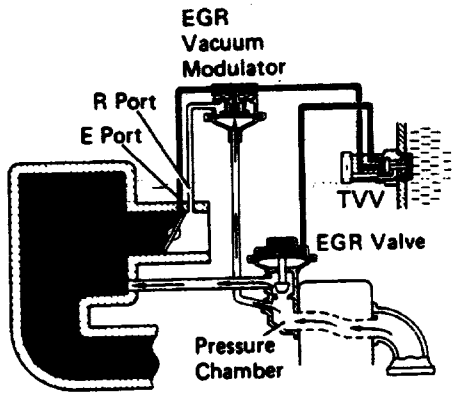

(3)

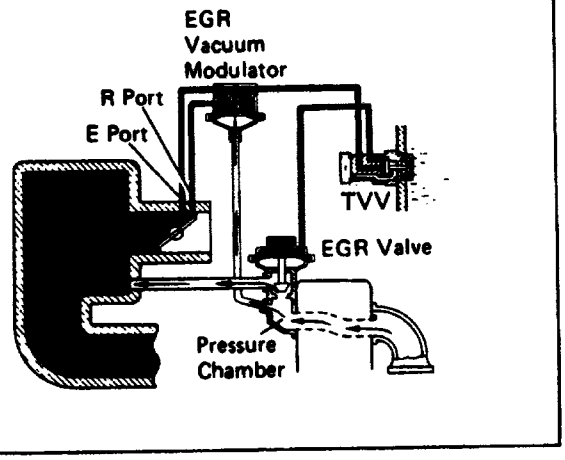

To reduce NOx emission, part of the exhaust gases are recirculated through the EGR valve to the intake manifold to lower the maximum combustion temperature.

Coolant Temp.	TVV	Throttle Valve Opening Angle	Pressure in the EGR Valve Pressure Chamber		EGR Vacuum Modulator	EGR Valve	Exhaust Gas
Below 30°C (86°F)	CLOSED	—	—		—	CLOSED	Not recirculated
Above 44°C (111°F)	OPEN	Positioned below E port	—		—	CLOSED	Not recirculated
		Positioned between E port and R port	(1) LOW	*Pressure constantly alternating between low and high	OPENS passage to atmosphere	CLOSED	Not recirculated
			(2) HIGH		CLOSES passage to atmosphere	OPEN	Recirculated
		Positioned above R port	(3) HIGH	**	CLOSES passage to atmosphere	OPEN	Recirculated (increase)

Remarks: * Pressure increases→Modulator closes→EGR valve opens→Pressure drops
EGR valve closes←Modulator opens←

**When the throttle valve is positioned above the R port, the EGR vacuum modulator will close the atmosphere passage and open the EGR valve to increase the EGR gas, even if the exhaust pressure is insufficiently low.

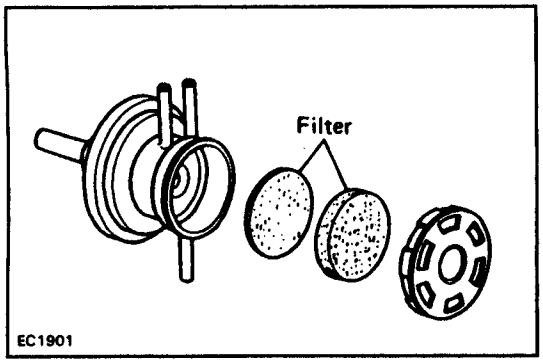

EGR SYSTEM INSPECTION

1. CHECK AND CLEAN FILTER IN EGR VACUUM MODULATOR

(a) Check the filter for contamination or damage.

(b) Using compressed air, clean the filter.

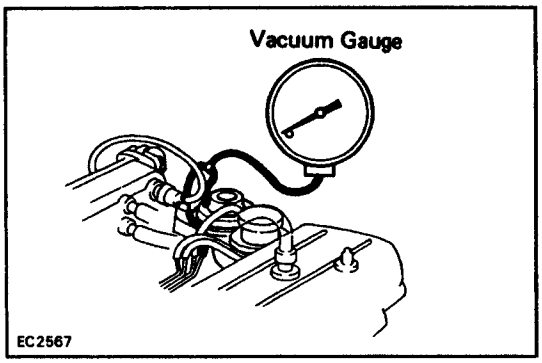

2. PREPARATION

Disconnect the vacuum hose from the EGR valve and, using a three way union, connect a vacuum gauge to it.

3. CHECK SEATING OF EGR VALVE

Start the engine and check that the engine starts and runs at idle.

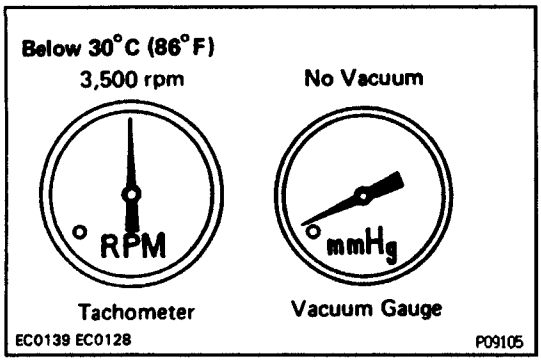

4. CHECK TVV WITH COLD ENGINE

(a) The coolant temperature should be below 30°C (86°F).

(b) Check that the vacuum gauge indicates zero at 3,500 rpm.

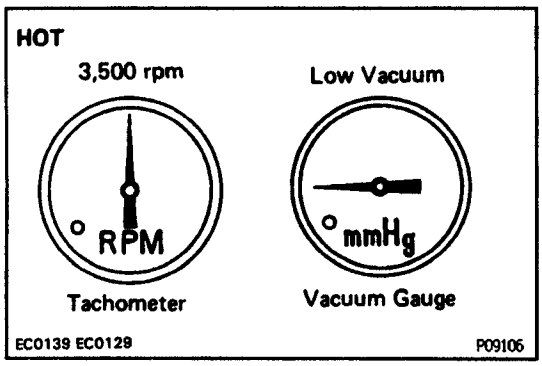

5. CHECK TVV AND EGR VACUUM MODULATOR WITH HOT ENGINE

(a) Warm up the engine.

(b) Check that the vacuum gauge indicates low vacuum at 3,500 rpm.

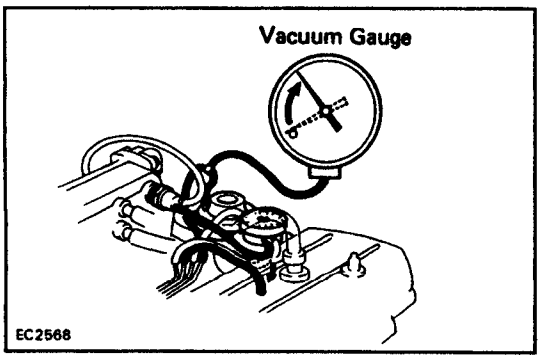

(c) Disconnect the vacuum hose from R port of the EGR vacuum modulator and connect R port directly to the intake manifold with another hose.

(d) Check that the vacuum gauge indicates high vacuum at 3,000 rpm.

HINT: As exhaust gas is increasingly recirculated the engine will start to misfire.

(e) Disconnect the vacuum gauge and reconnect the vacuum hoses to the proper locations.

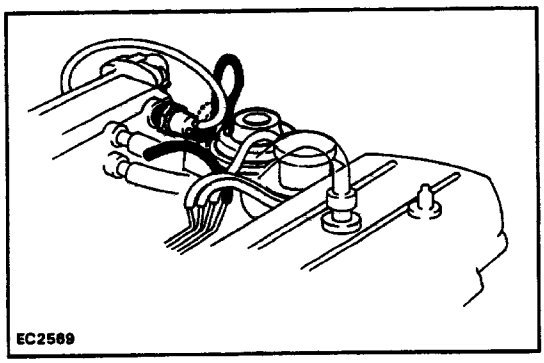

6. CHECK EGR VALVE

(a) Apply vacuum directly to the EGR valve with the engine idling.
(b) Check that the engine runs rough or dies.
(c) Reconnect the vacuum hoses to the proper locations.

IF NO PROBLEM IS FOUND WITH THIS INSPECTION, THE SYSTEM IS OKAY; OTHERWISE INSPECT EACH PART

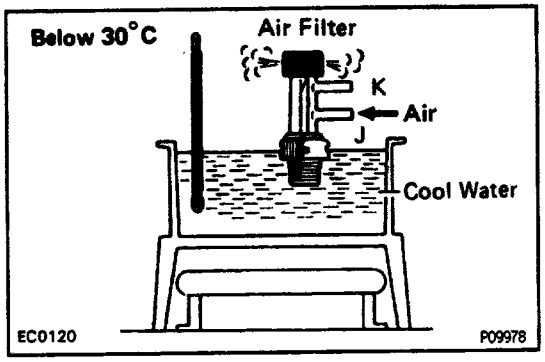

TVV INSPECTION

CHECK TVV BY BLOWING AIR INTO PIPE

(a) Drain the coolant from the radiator into a suitable container.
(b) Remove the TVV.
(c) Cool the TVV to below 30 °C(86°F).
(d) Check that the air flows from pipe J to the air filter.

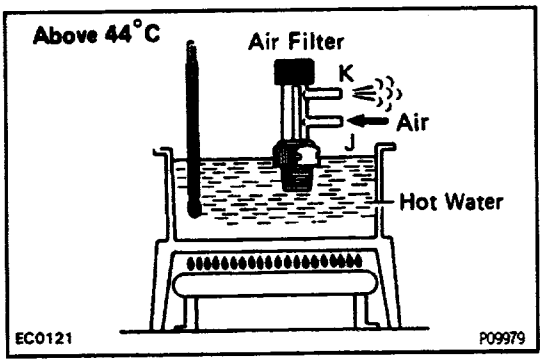

(e) Heat the TVV to above 44 °C (111°F).
(f) Check that the air flows from pipe J to pipe K.
(g) Apply sealant to the threads of the TVV and reinstall.

Sealant:

Part No. 08833–00070, THREE BOND 1324 or equivalent

(h) Fill the radiator with coolant.

If a problem is found, replace the TVV.

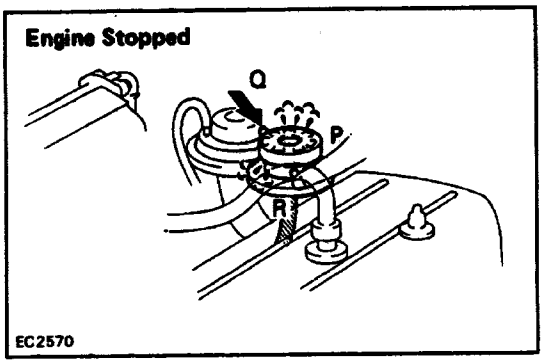

EGR VACUUM MODULATOR INSPECTION

CHECK EGR VACUUM MODULATOR OPERATION

(a) Disconnect the vacuum hoses from ports Q and R of the EGR vacuum modulator.
(b) Plug ports P and R with your finger.
(c) Blow air into port a. Check that the air passes through to the air filter side freely.
(d) Start the engine and maintain the speed at 3,500 rpm,
(e) Repeat the above test. Check that there is a strong resistance to air flow.
(f) Reconnect the vacuum hoses to the proper locations

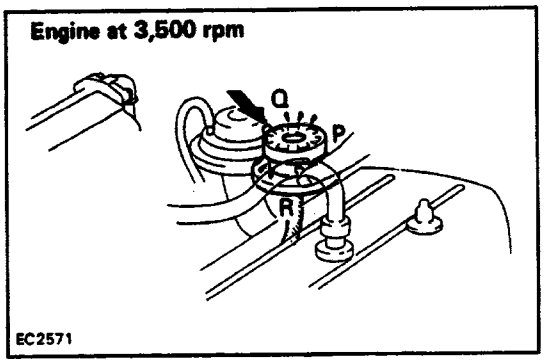

EGR VALVE INSPECTION

1. REMOVE EGR VALVE

Check the valve for sticking and heavy carbon deposits. If a problem is found, replace it. ”

2. INSTALL EGR VALVE WITH NEW GASKET

EVAPORATIVE EMISSION (EVAP) CONTROL SYSTEM

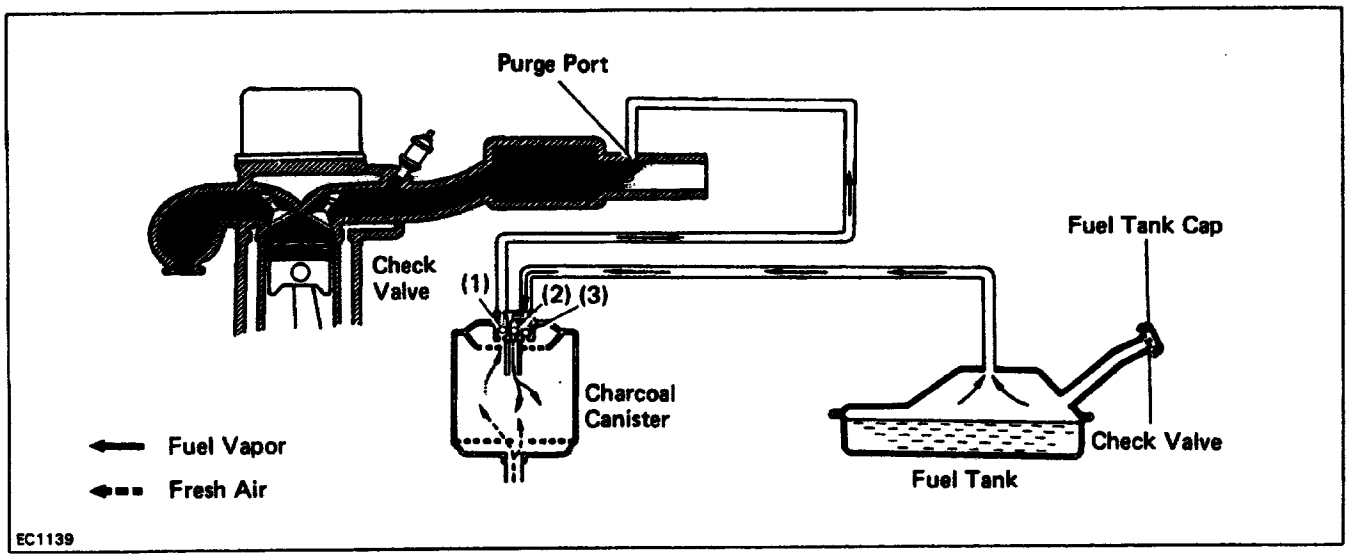

To reduce HC emission, evaporated fuel from the fuel tank is routed through the charcoal canister to the throttle body for combustion in the cylinders.

Throttle Valve opening	Check Valve in Charcoal Canister			Check Valve in Fuel Tank Cap	Evaporated Fuel (HC)
	(1)	(2)	(3)		
Positioned below purge port	CLOSED	—	—	—	HC from tank is absorbed in the canister.
Positioned above purge port	OPEN	—	—	—	HC from canister is led into throttle body.
High pressure in tank	—	OPEN	CLOSED	CLOSED	HC from tank is absorbed in the canister.
High vacuum in tank	—	CLOSED	OPEN	OPEN	(Air is led into the tank.)

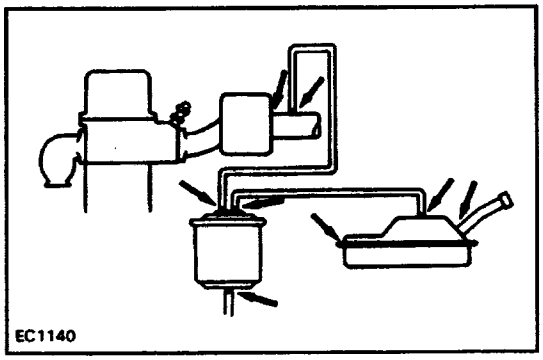

INSPECTION OF FUEL VAPOR LINES, FUEL TANK AND TANK CAP

1. VISUALLY INSPECT LINES AND CONNECTIONS

Look for loose connections, sharp bends or damage.

2. VISUALLY INSPECT FUEL TANK

Look for deformation,cracks or fuel leakage.

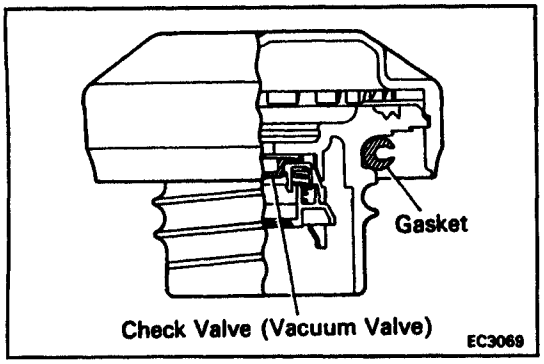

3. VISUALLY INSPECT FUEL TANK CAP

Look for a damaged or deformed gasket and cap. If necessary, repair or replace the cap.

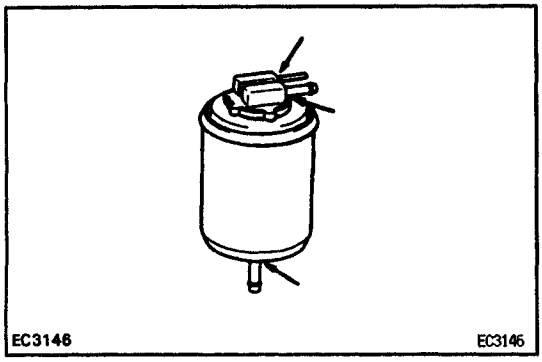

CHARCOAL CANISTER INSPECTION

1. REMOVE CHARCOAL CANISTER

2. VISUALLY INSPECT CHARCOAL CANISTER CASE

Look for cracks or damage.

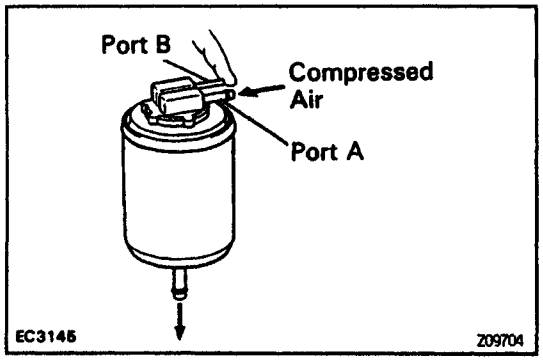

3. CHECK FOR CLOGGED FILTER AND STUCK CHECK VALVE

(a) Using low pressure compressed air 4.71 kPa (48 gf/cm2, 0.68 psi), blow into port A and check that air flows without resistance from the other ports.

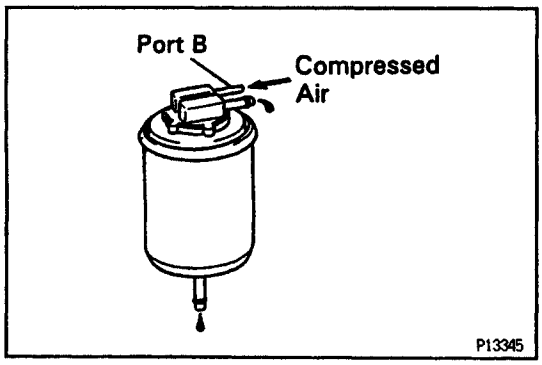

(b) Blow low pressure compressed air 4.71 kPa (48 gf/cm2, 0.68 psi) into port B and check that air does not flow from the other ports.

If a problem is found, replace the charcoal canister.

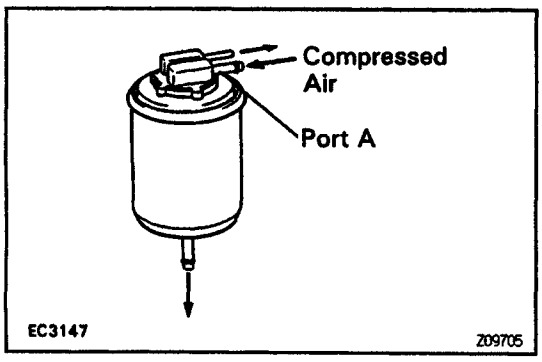

4. CLEAN FILTER IN CANISTER

Clean the filter by blowing 294 kPa (3 kgf/cm2, 43 psi) of compressed air into port A while holding port B closed.

NOTICE:

- **Do not attempt to wash the canister.**
- **No activated carbon should come out.**

6. INSTALL CHARCOAL CANISTER

LAYOUT AND SCHEMATIC DRAWING (California)

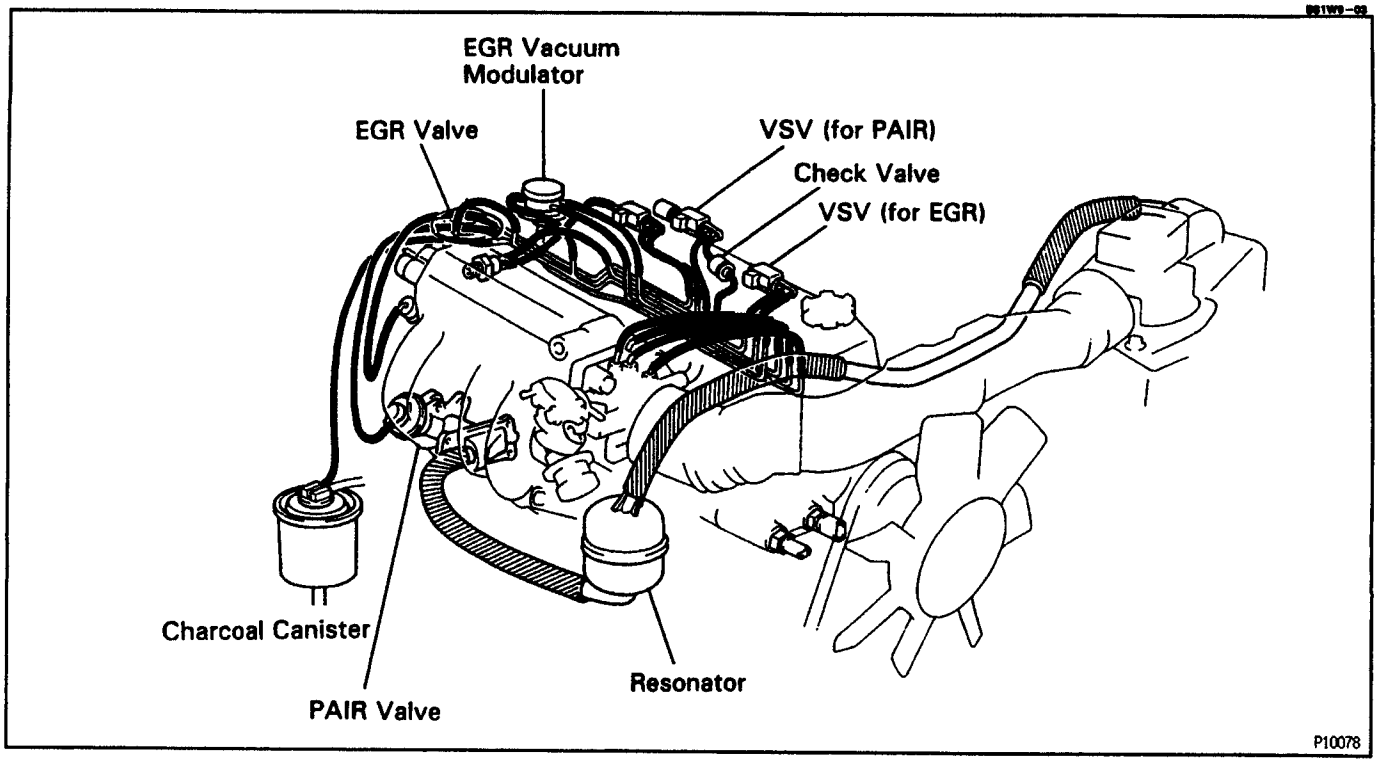

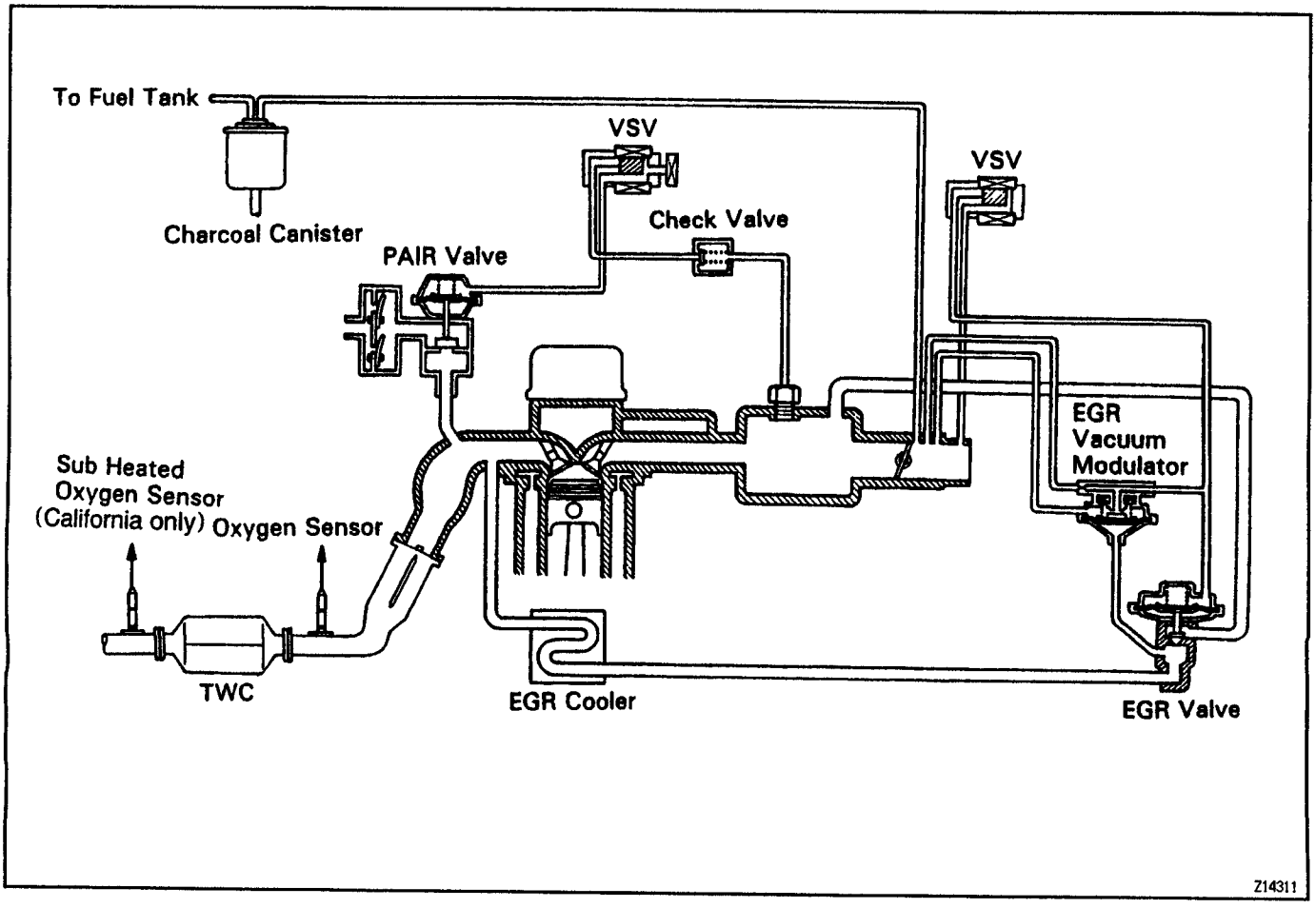

LAYOUT AND SCHEMATIC DRAWING (Federal and Canada)

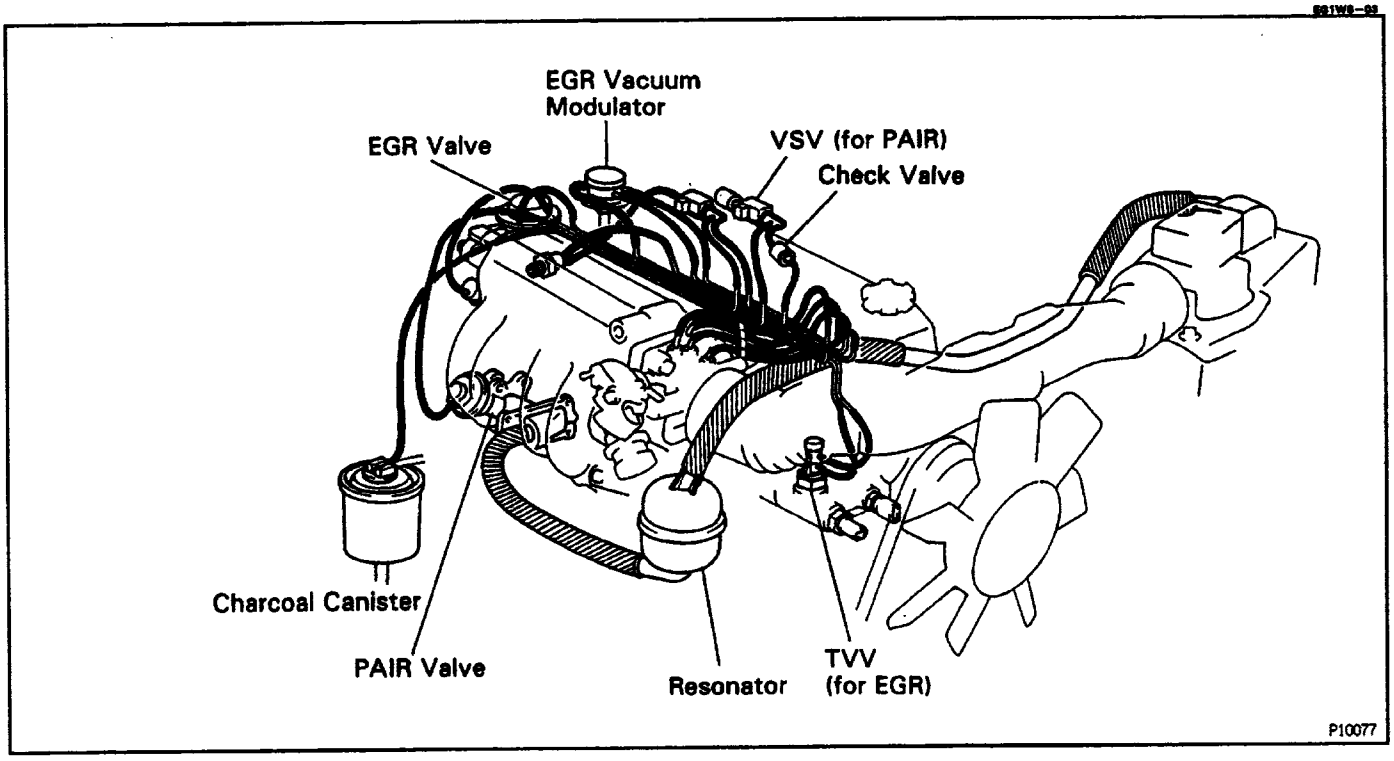

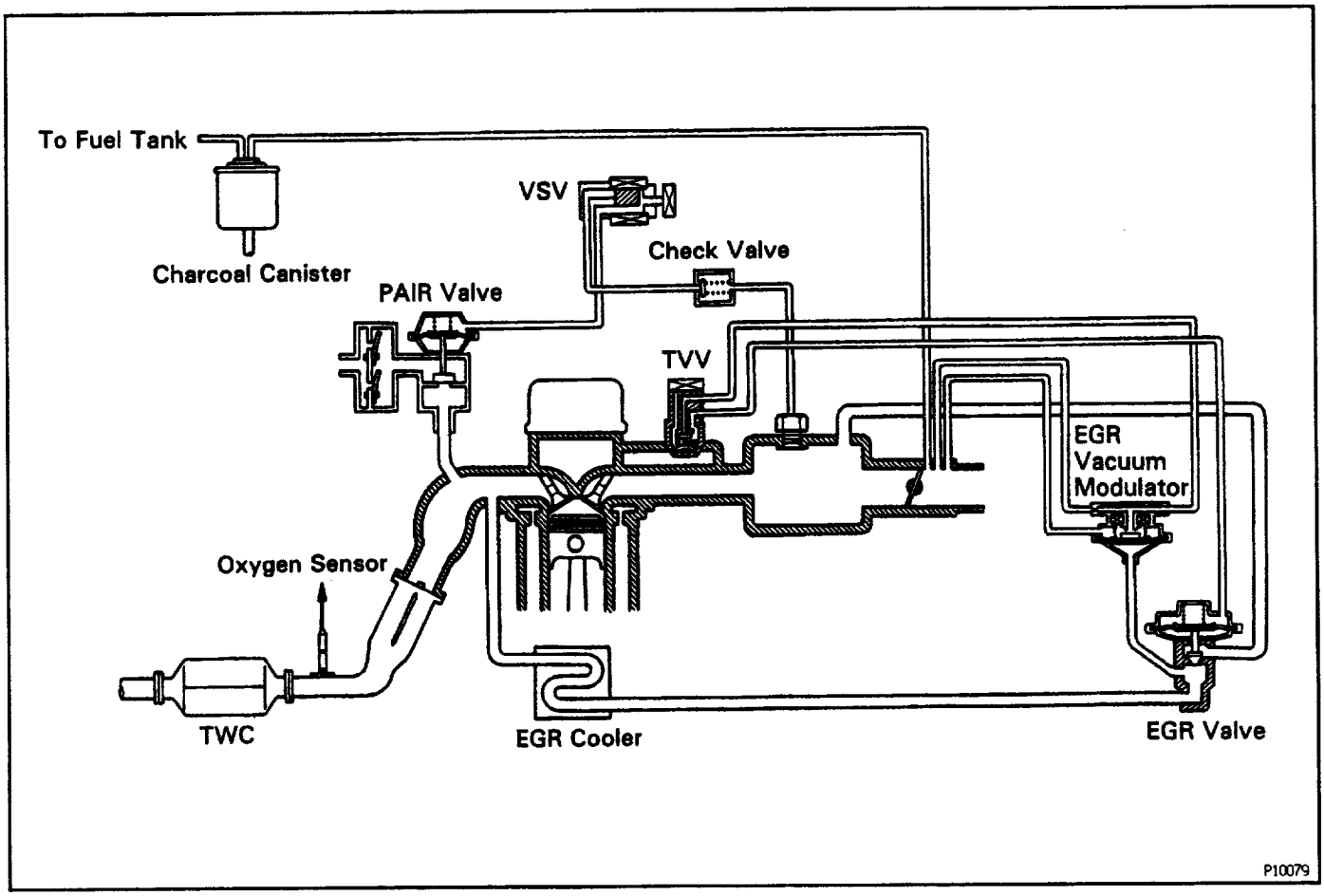

POSITIVE CRANKCASE VENTILATION (PCV) SYSTEM

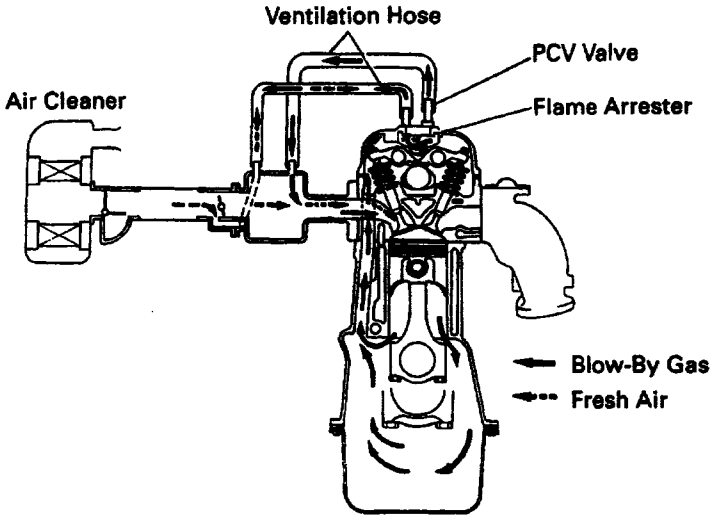

EC2572

To reduce HC emission, crankcase blow–by gas is routed through the PCV valve to the intake manifold for combustion in the cylinders.

Engine not Running or Backfiring
Intake Manifold Side

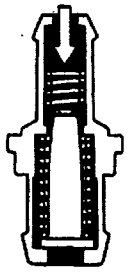

Cylinder Heed Side

O PC VALVE IS CLOSED.

EC1001

Normal Operation

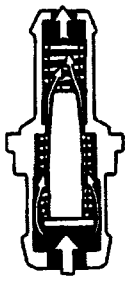

O PC VALVE IS OPEN.
VACUUM PASSAGE IS LARGE.

EC1002

Idling or Decelerating

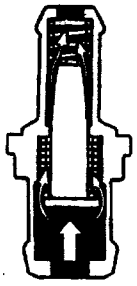

O PC VALVE IS OPEN.
O VACUUM PASSAGE IS SMALL.

EC1003

Acceleration or Heavy Load

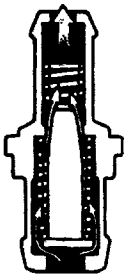

O PC VALVE IS FULLY OPEN.

EC1004

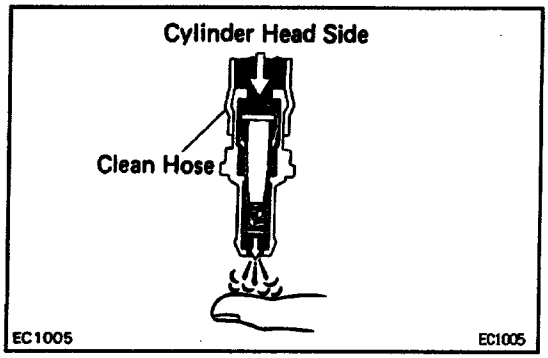

PCV VALVE INSPECTION

1. REMOVE PCV VALVE

2. ATTACH CLEAN HOSE TO PCV VALVE

3. BLOW AIR FROM CYLINDER HEAD SIDE

Check that air passes through easily.

NOTICE: Do not suck air through the valve.
Petroleum substances inside the valve are harmful.

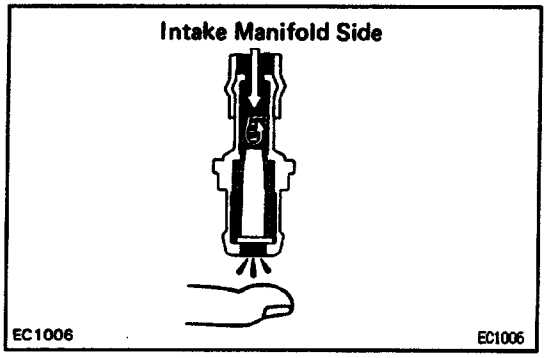

4. BLOW AIR FROM INTAKE MANIFOLD SIDE

Check that air passes through with difficulty. If the PCV valve fails either check, replace it.

5. REINSTALL PCV VALVE

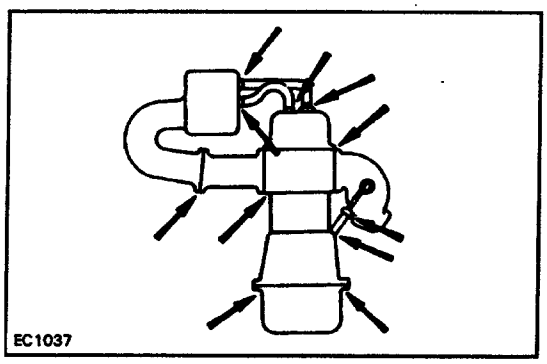

PCV HOSES AND CONNECTIONS INSPECTION

VISUALLY INSPECT HOSES, CONNECTIONS AND GASKETS

Check for cracks, leaks or damage.

PREPARATION

SST (SPECIAL SERVICE TOOLS)

	**09843–18020** Diagnosis Check Wire	

RECOMMENDED TOOLS

	**09082–00050** TOYOTA Electrical Tester Set.	

EQUIPMENT

Heater	TVV
Thermometer	TVV
Tachometer	
Torque wrench	
Vacuum gauge	

SSM (SPECIAL SERVICE MATERIALS)

	08833–00070 Adhesive 1324, THREE BOND 1324 or equivalent	TVV

PULSED SECONDARY AIR INJECTION (PAIR) SYSTEM

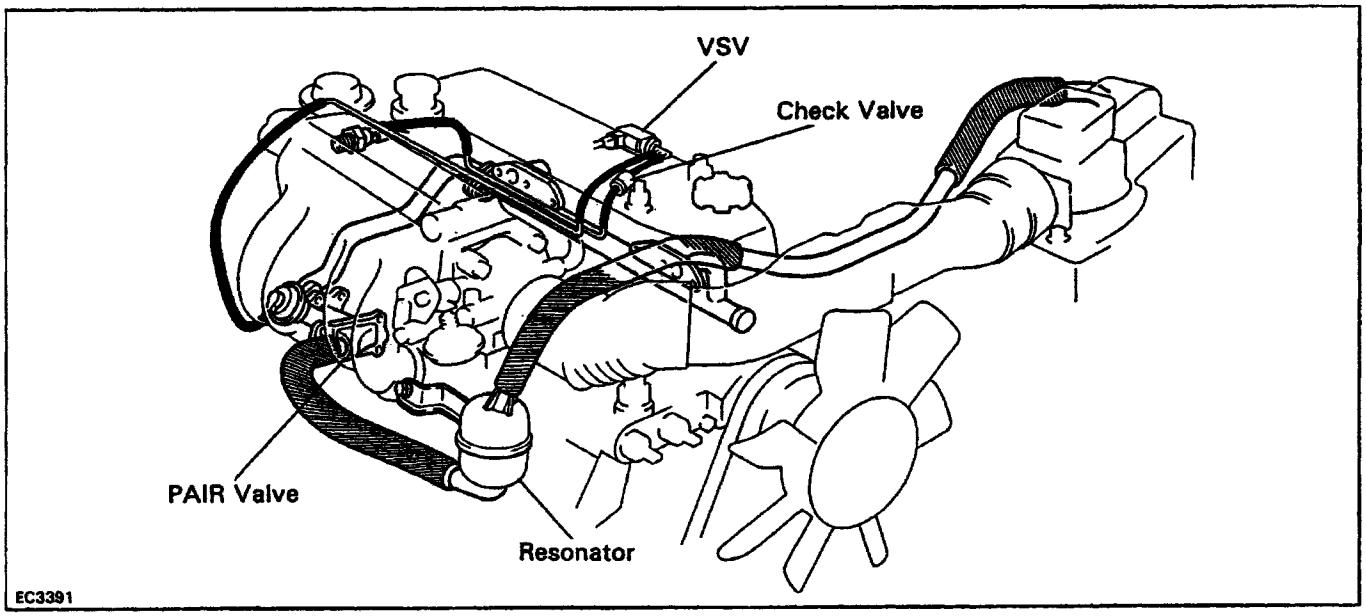

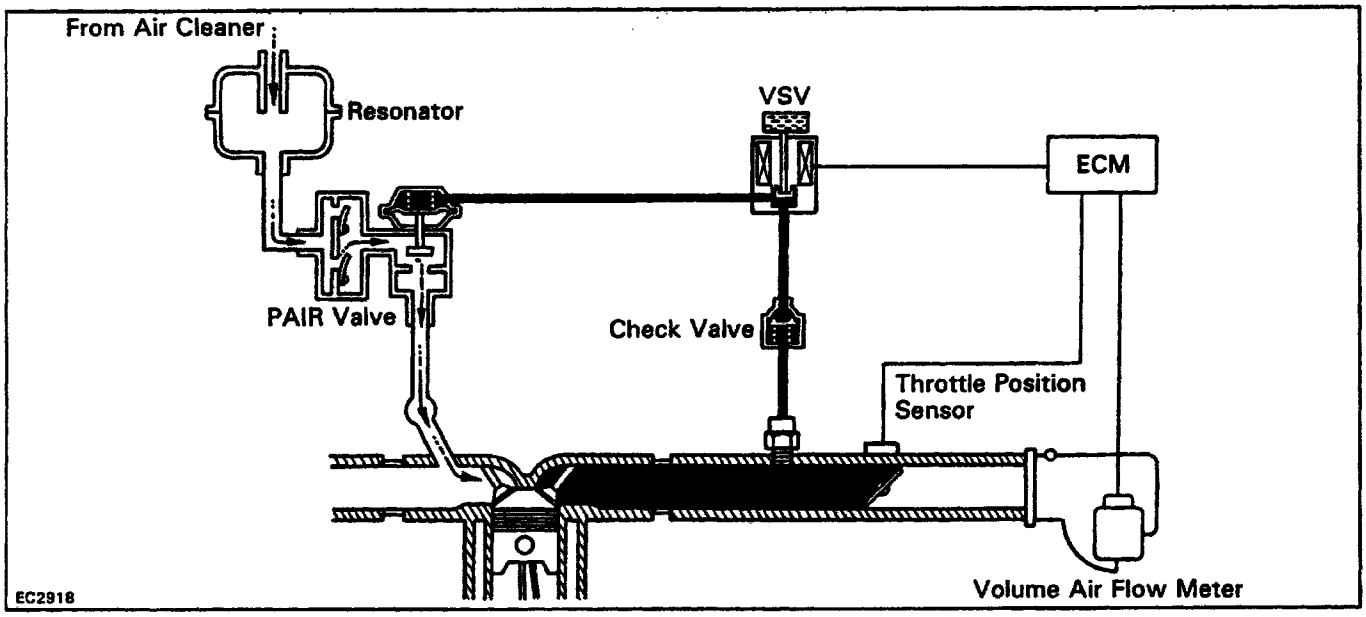

To reduce HC and CO emissions, this system draws in–air into exhaust ports to accelerate oxidation, using vacuum generated by the exhaust pulsation in the exhaust manifold.

Condition	Coolant temp.	Throttle valve position	Vehicle speed	Engine RPM	VSV	PAIR
Normal driving	Below 30°C (86°F)	—	—	Below 3,600 rpm	ON	ON
				Above 3,600 rpm	OFF	OFF
Deceleration	Above 40°C (104°F)	Idling	Below 4 km/h (2 mph)	Below 1,000 rpm	OFF	OFF
				Above 2,500 rpm	ON	ON
			Above 4 km/h (2 mph)	—	ON	ON

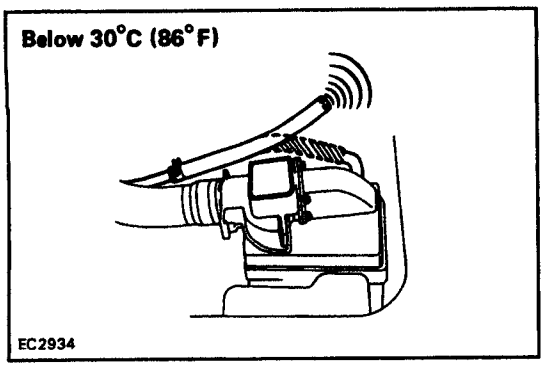

PAIR SYSTEM INSPECTION

1. VISUALLY CHECK HOSES AND TUBES FOR CRACKS, KINKS, DAMAGE OR LOOSE CONNECTIONS

2. CHECK PAIR SYSTEM WITH COLD ENGINE

(a) The coolant temperature should be below 30˚C (86˚F).

(b) Disconnect the N0.1 PAIR hose from the air cleaner case.

(c) Check that a bubbling noise is heard from the NO.1 PAIR hose at idle.

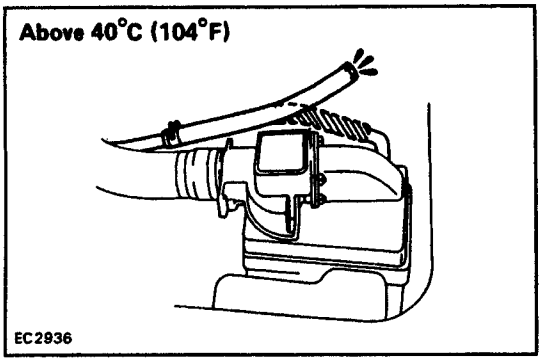

3. CHECK PAIR SYSTEM WITH WARM ENGINE

(a) Warm up the engine to above 40˚C(104˚F).

(b) With the engine idling, check that a bubbling noise is not heard from the NO. 1 hose.

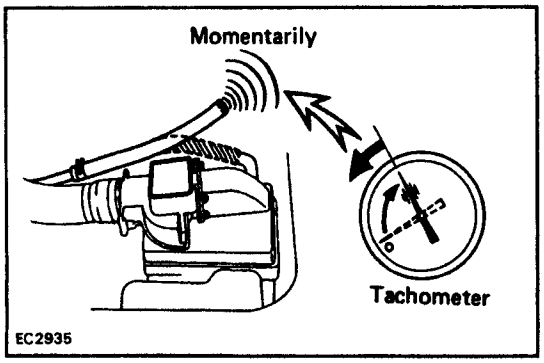

(c) Race the engine and quickly close the throttle valve Check that a bubbling noise stops momentarily.

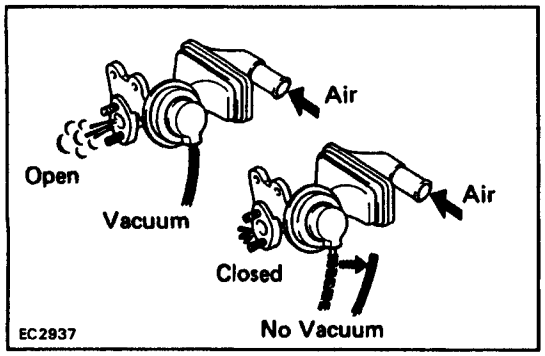

PAIR VALVE INSPECTION

CHECK PAIR VALVE BY BLOWING AIR INTO PIPE

(a) Apply vacuum to the pair valve diaphragm.

(b) Blow air into the pipe, as shown, and check that the PAIR valve is

(c) Release the vacuum and check that the pair valve is closed.

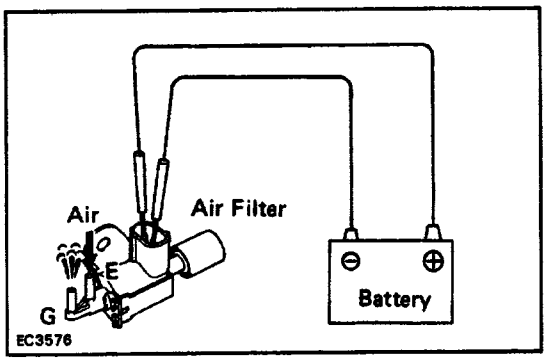

VSV INSPECTION

1. CHECK VACUUM CIRCUIT CONTINUITY IN VSV BY BLOWING AIR INTO PIPE

(a) Connect the VSV terminals to the battery terminals as illustrated.

(b) Blow air into pipe E and check that air comes out of pipe G.

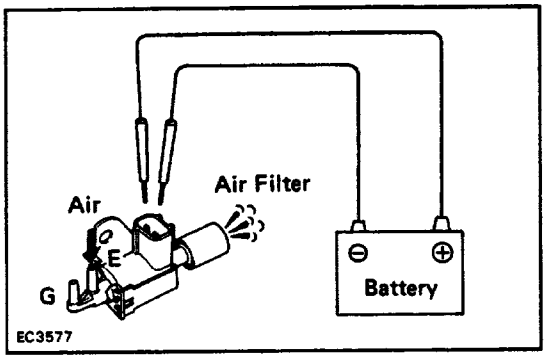

(c) Disconnect the battery from the VSV.

(d) Blow air into pipe E and check that air comes out of air filter.

If a problem is found, repair the VSV.

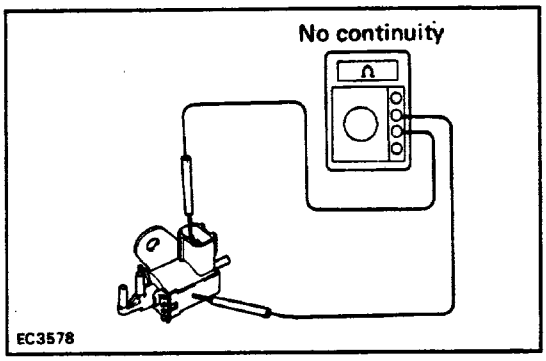

2. CHECK FOR SHORT CIRCUIT .

Using an ohmmeter, check that there is no continuity between the terminal and the VSV body. If there is continuity, replace the VSV.

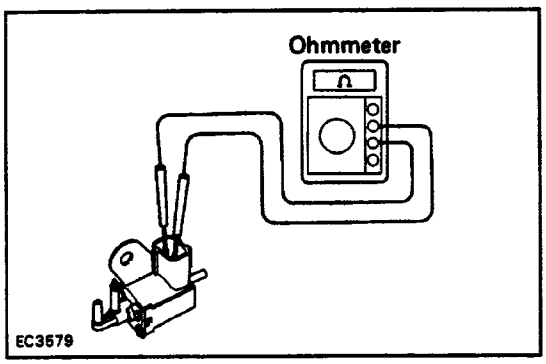

3. CHECK FOR OPEN CIRCUIT

Using an ohmmeter, measure the resistance between the terminals as shown.

Specified resistance:

At 20’ *C (88˚ F)

30–50Ω

If resistance is not within specification, replace the VSV.

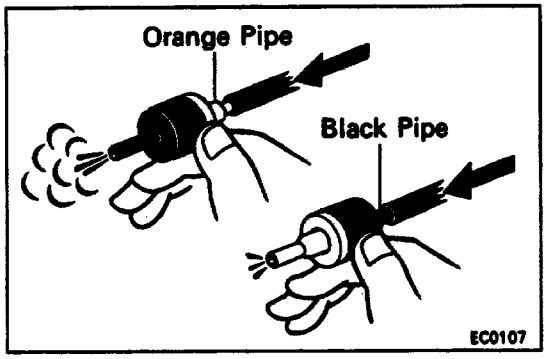

CHECK VALVE INSPECTION

CHECK VALVE BY BLOWING AIR INTO EACH PIPE

(a) Check that air flows from the orange pipe to the black pipe.

(b) Check that air does not flow from the black pipe to the orange pipe.

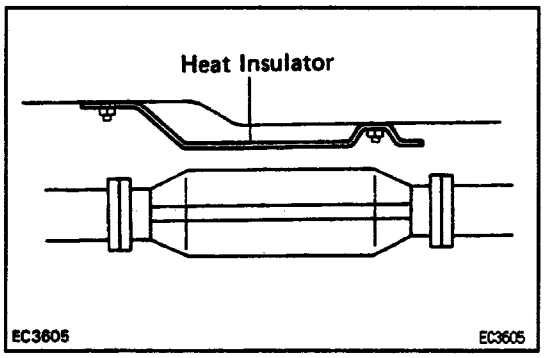

HEAT INSULATOR INSPECTION

1. CHECK HEAT INSULATOR FOR DAMAGE

2. CHECK FOR ADEQUATE CLEARANCE BETWEEN CATALYTIC CONVERTER AND HEAT INSULATOR

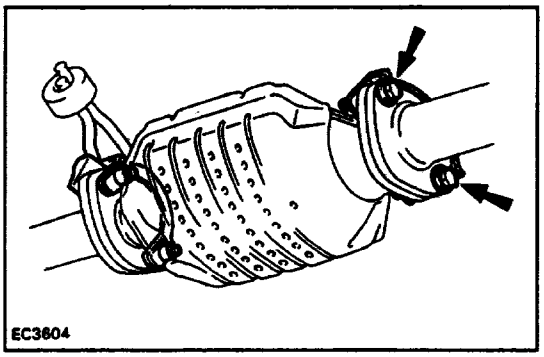

THREE–WAY CATALYTIC CONVERTER REPLACEMENT

1. REMOVE CONVERTER

(a) Jack up the vehicle.
(b) Check that the converter is cool.
(c) Remove the bolts at the front and rear of the converter.
(d) Remove the converter and gaskets.

2. INSTALL CONVERTER

(a) Place new gaskets on the converter front and rear pipes, and connect the converter to the exhaust pipes.
(b) Torque the bolts.

Torque: 39 N–m (400 kgf–cm. 29 ft–lbf)

(c) Reinstall the bracket bolts and tighten them.

SERVICE SPECIFICATIONS

TORQUE SPECIFICATIONS

Part tightened	N	kgf–cm	ft–lbf
Cylinder head x EGR valve	•13	130	9
Air intake chamber x EGR pipe	•13	130	9
Intake manifold x PAIR reed valve	13	130	9
No. 1 air injection manifold x PAIR reed valve	13	130	9
Three –way catalytic converter x Front and rear pipes	39	400	29

EMISSION CONTROL SYSTEMS

SYSTEM PURPOSE

The emission control systems are installed to reduce the amount of CO, HC and NOx exhausted from the engine (3), (4) and (5), to prevent the atmospheric release of blow–by gas–containing HC (1) and evaporated fuel containing HC being released from the fuel tank (2).
The function of each system is shown in the following table.

System	Abbreviation	Function
(1) Positive Crankcase Ventilation	PCV	Reduces crankcase blow–by gas
(2) Evaporative Emission Control	EVAP	Reduces evaporated HC
(3) Exhaust Gas Recirculation	EGR	Reduces NOx
(4) Three–Way Catalytic Converter	TWC	Reduces CO, HC and NOx
(5) Multiport Fuel Injection ’	MFI	Injects a precisely timed, optimum amount of fuel for reduced exhaust emissions

Remark: * For inspection and repair of the MFI system, refer to the MFI section this manual.

THREE–WAY CATALYTIC CONVERTER (TWC) SYSTEM

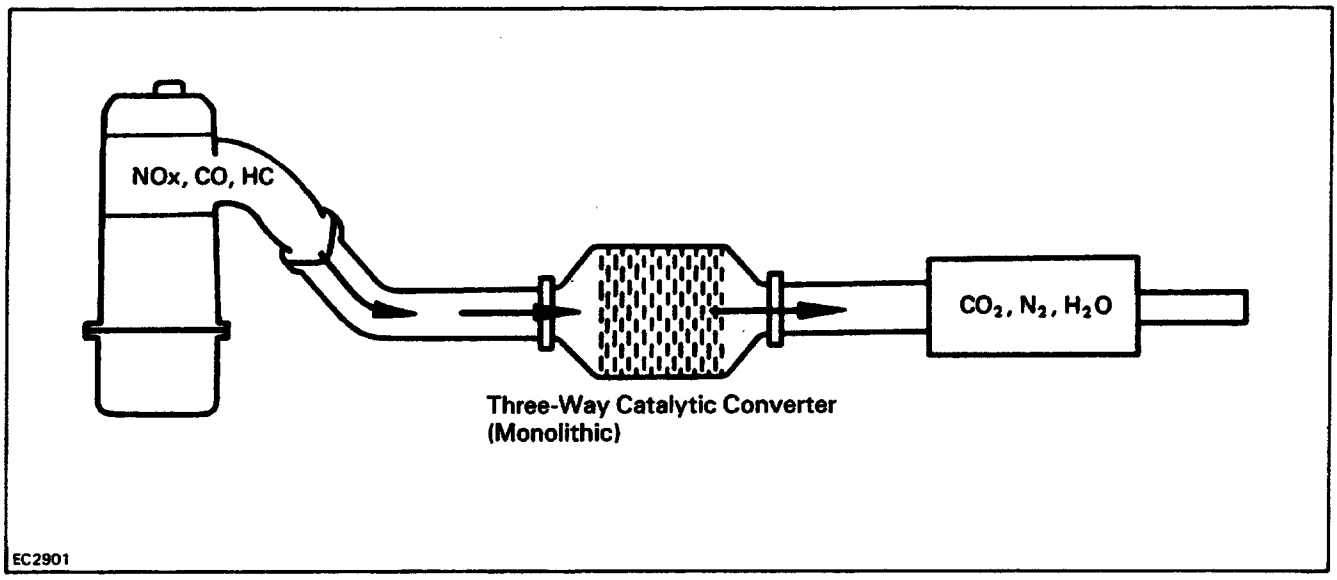

To reduce HC, CO and NOx emissions, they are oxidized, reduced and converted to nitrogen (N2), carbon dioxide (C02) and water (H2O) by the catalytic converter.

Exhaust Port		TWC		Exhaust Gas
HC, CO and NOx	→	Oxidation and reduction	→	CO2 H2O N2

V01777

EXHAUST PIPE ASSEMBLY INSPECTION

1. CHECK CONNECTIONS FOR LOOSENESS OR DAMAGE

2. CHECK CLAMPS FOR WEAKNESS, CRACKS OR DAMAGE

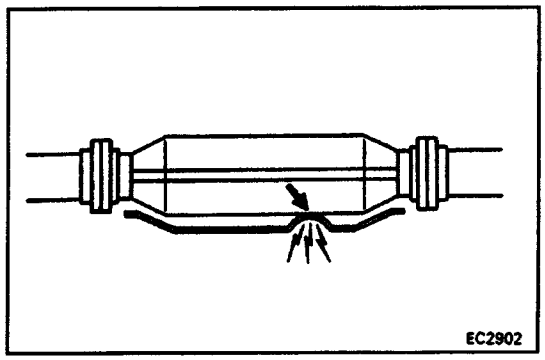

THREE–WAY CATALYTIC CONVERTER INSPECTION

CHECK FOR DENTS OR DAMAGE

If any part of the protector is damaged or dented to the extent that it contacts the catalytic converter,
repair or replace it.

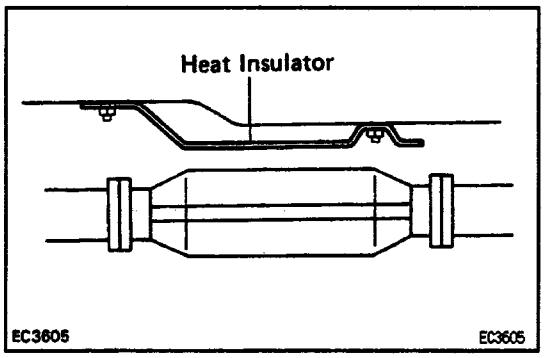

HEAT INSULATOR INSPECTION

1. CHECK HEAT INSULATOR FOR DAMAGE

2. CHECK FOR ADEQUATE CLEARANCE BETWEEN CATALYTIC CONVERTER AND HEAT INSULATOR

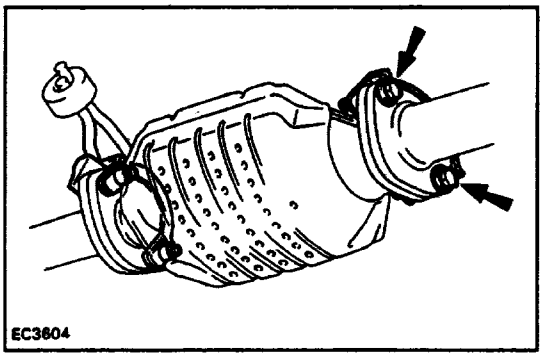

THREE–WAY CATALYTIC CONVERTER REPLACEMENT

1. REMOVE CONVERTER

(a) Jack up the vehicle.
(b) Check that the converter is cool.
(c) Remove the bolts at the front and rear of the converter.
(d) Remove the converter and gaskets.

2. INSTALL CONVERTER

(a) Place new gaskets on the converter front and rear pipes, and connect the converter to the exhaust pipes.
(b) Torque the bolts.

Torque: 39 N–m (400 kgf–cm. 29 ft–lbf)

(c) Reinstall the bracket bolts and tighten them.

SERVICE SPECIFICATIONS

TORQUE SPECIFICATIONS

Part tightened	N	kgf–cm	ft–lbf
Cylinder head x EGR valve	•13^	130	9
Air intake chamber x EGR pipe	•13	130	9
Intake manifold x PAIR reed valve	13	130	9
No. 1 air injection manifold x PAIR reed valve	13	130	9
Three –way catalytic converter x Front and rear pipes	39	400	29

COMPRESSION CHECK

HINT: If there is lack of power, excessive oil consumption or poor fuel mileage, measure the cylinder compression pressure.

1. WARM UP ENGINE

2. REMOVE SPARK PLUGS

3. DISCONNECT DISTRIBUTOR CONNECTOR

4. DISCONNECT COLD START INJECTOR CONNECTOR

5. MEASURE CYLINDER COMPRESSION PRESSURE

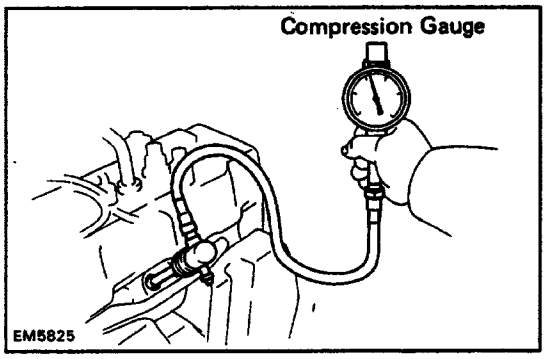

(a) Insert a compression gauge into the spark plug hole.

(b) Fully open the throttle.

(c) While cranking the engine with the starter motor, measure the compression pressure.

NOTICE: This test must be done for as short a time as possible to avoid overheating of the catalytic converter.

HINT: A fully charged battery must be used to obtain at least 250 rpm.

(d) Repeat steps (a) through (c) for each cylinder.

Compression pressure:
1,177 kPa (12.0 kgf/cm2, 171 psi)
Minimum pressure:
981 kPa (10.0 kgf/em2, 142 psi)
Difference between each cylinder:
98 kPa (1.0 kgf/cm2, 14 psi) or less

(e) If cylinder compression in one or more cylinders is low, pour a small amount of engine oil into the cylinder through the spark plug hole and repeat steps (a) through (c) for the low compression cylinder.

- If adding oil helps the compression, chances are that the piston rings and /or cylinder bore are worn or damaged.
- If pressure stays low, a valve may be sticking or seating improperly, or there may be leakage past the gasket.

6. CONNECT COLD START INJECTOR CONNECTOR

7. CONNECT DISTRIBUTOR CONNECTOR

8. INSTALL SPARK PLUGS

Torque: 18 N–m (180 kgf–cm, 13 ft–lbf)

CYLINDER BLOCK

COMPONENTS FOR REMOVAL AND INSTALLATION

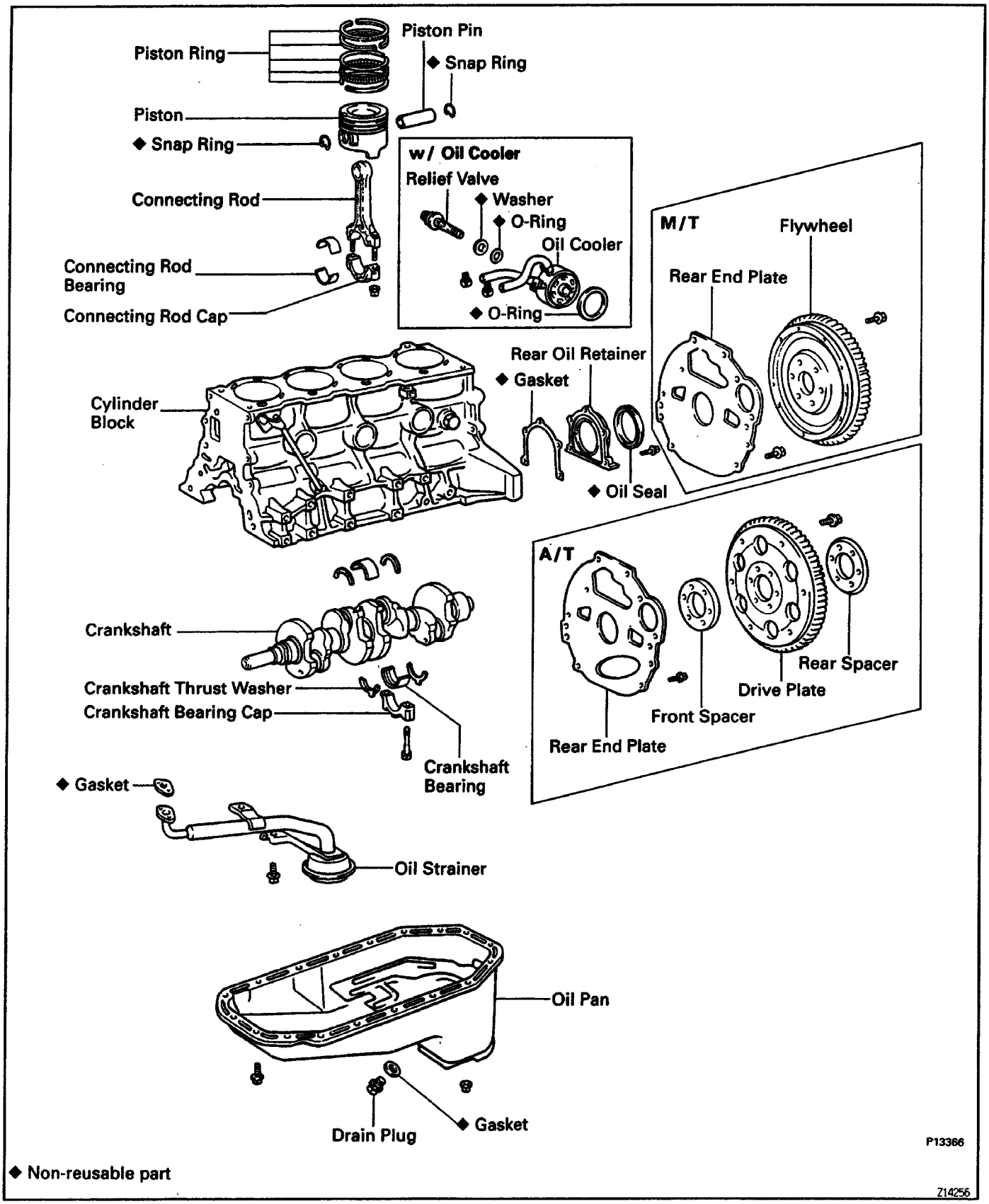

◆ Non-reusable part

Z14256

ENGINE REMOVAL

1. REMOVE HOOD

2. REMOVE BATTERY

3. REMOVE ENGINE UNDER COVER

4. DRAIN COOLANT FROM RADIATOR AND CYLINDER BLOCK

(See step 3 coolant check and replacement in Cooling System)

5. DRAIN ENGINE OIL

(See step 1 oil and filter replacement in Lubrication System)

6. REMOVE AIR CLEANER CASE AND INTAKE AIR CONNECTOR

7. REMOVE RADIATOR

(See radiator removal In radiator in Cooling System)

8. REMOVE PS PUMP BELT

(a) Stretch the belt tight and loosen the PS pump pulley lock nut.

(b) Remove the PS belt.

9. w/ A/C:

REMOVE A/C BELT

10. REMOVE GENERATOR DRIVE BELT, FLUID COUPLING AND FAN PULLEY

(See stop 3 timing chain removal in timing chain)

11. DISCONNECT THESE WIRES AND CONNECTORS:

(a) Ground strap from LH fender apron

(b) Generator connector and wire

(c) Igniter connector

(d) Generator wires

(e) High–tension cord for ignition coil

(f) Distributor wire from igniter

(g) Ground strap from engine rear side

(h) ECM connectors

(i) M/T:

Starter relay connector

(j) Check connector

(k) w/ A/C:

A/C compressor connector

12. DISCONNECT THESE HOSES:

(a) PS air hoses from gas filter and air pipe

(b) Brake booster hose

(c) w/Cruise control:

Cruise control vacuum hose

(d) Charcoal canister hose from canister

13. DISCONNECT THESE CABLE:

(a) Accelerator cable

(b) A/T:

Throttle cable

(c) w/Cruise control:

Cruise control cable

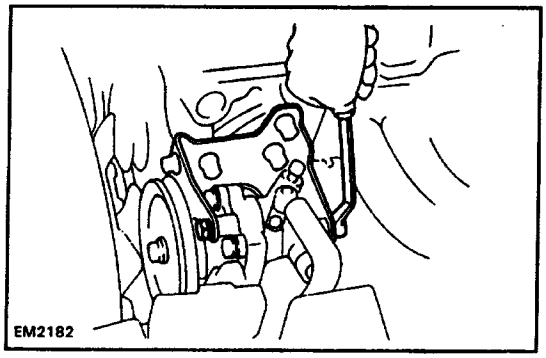

14. w/PS:

REMOVE PS PUMP FROM BRACKET

(a) Remove the drive belt.

(b) Remove the 4 bolts.

(c) Remove the PS pump.

HINT: Lay the PS pump to one side without disconnecting the hoses.

15. DISCONNECT GROUND STRAP FROM PS PUMP BRACKET

16. w/ A/C:

REMOVE COMPRESSOR FROM BRACKET

(a) Loosen the drive belt adjusting bolt and remove the drive belt.

(b) Remove the compressor on the front side without disconnecting the hoses.

17. DISCONNECT GROUND STRAPS FROM ENGINE REAR SIDE AND RH SIDE

18. M/T:

REMOVE SHIFT LEVER(S) FROM INSIDE OF VEHICLE

19. REMOVE REAR PROPELLER SHAFT

(See rear propeller shaft removal in Propeller Shaft)

20. 2WD A/T:

DISCONNECT MANUAL SHIFT LINKAGE FROM PNP SWITCH

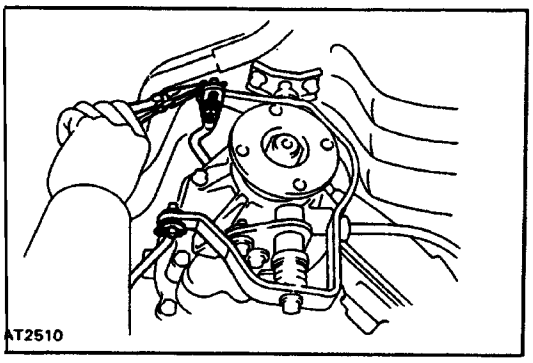

21. 4WD A/T:

DISCONNECT TRANSFER SHIFT LINKAGE

(a) Disconnect the No.1 and No.2 transfer shift linkages from the cross shaft.

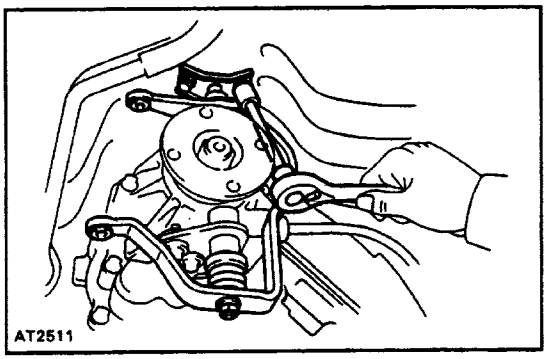

(b) Remove the cross shaft from the body.

22. DISCONNECT SPEEDOMETER CABLE

NOTICE: Do not lose the felt dust protector and washers.

23. 4WD:

REMOVE TRANSFER UNDER COVER

24. REMOVE STABILIZER BAR

25. 4WD:

REMOVE FRONT PROPELLER SHAFT

(See front propeller shaft removal in Propeller Shaft)

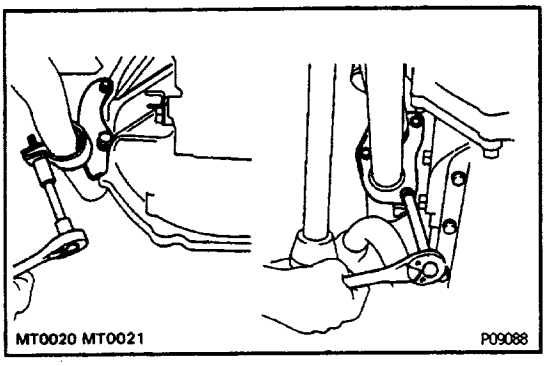

26. REMOVE FRONT EXHAUST PIPE

(a) Disconnect the oxygen sensor connector.

(b) Disconnect the exhaust pipe from the exhaust manifold.

(c) Remove the exhaust pipe clamp from the clutch housing.

(d) Remove the exhaust pipe from the catalytic converter.

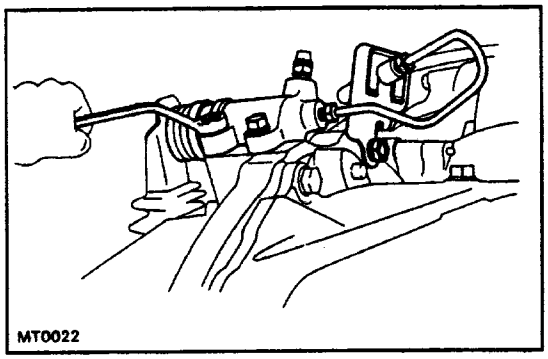

27. M/T:

REMOVE CLUTCH RELEASE CYLINDER WITH BRACKET FROM TRANSMISSION

28. 4WD:

REMOVE NO.1 FRONT FLOOR HEAT INSULATOR AND BRAKE TUBE HEAT INSULATOR

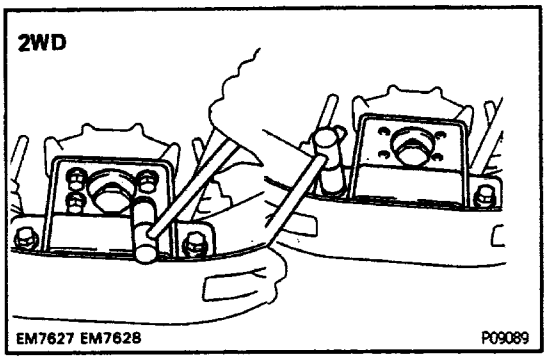

29. 2WD:

REMOVE ENGINE REAR MOUNTING AND BRACKET

(a) Remove the 4 bolts from the engine rear mounting.

(b) Raise the transmission slightly by raising the engine with a jack.

(c) Remove the 4 bolts from the support member.

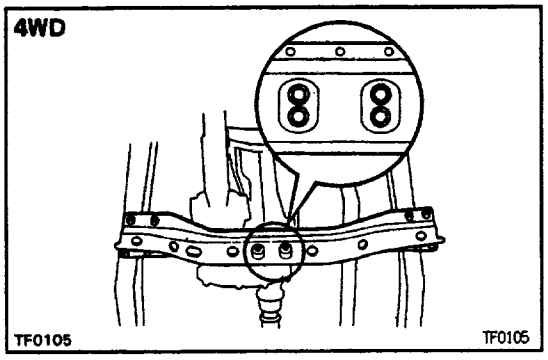

30. 4WD:

REMOVE NO.2 FRAME CROSSMEMBER FROM SIDE FRAME

(a) Remove the 4 bolts from the engine rear mounting.

(b) Raise the transmission slightly with a jack.

(c) Remove the 4 bolts from the side frame and remove the No.2 frame crossmember.

31. REMOVE ENGINE WITH TRANSMISSION FOR VEHICLE

(a) Attach the engine hoist chain to the lift brackets of the engine.

(b) Remove the mounting nuts and bolts.

(c) Lift engine out of the vehicle slowly and carefully.

HINT: Make sure the engine is clear of all wiring and hoses.

32. REMOVE TRANSMISSION FROM ENGINE

(a) A/T:

Remove the A/T oil cooler pipes.

(b) Remove the starter.

(c) Remove the 2 stiffener plates and exhaust pipe bracket from engine.

(d) Remove the transmission from the engine.

33. M/T:

REMOVE CLUTCH COVER AND DISC

CYLINDER BLOCK DISASSEMBLY

(See Components for Removal and Installation)

1. REMOVE FLYWHEEL OR DRIVE PLATE

2. REMOVE REAR END PLATE

3. INSTALL ENGINE STAND FOR DISASSEMBLY

4. REMOVE CYLINDER HEAD

(See cylinder head removal in cylinder head)

5. REMOVE TIMING CHAIN

(See timing chain removal in timing chain)

6. REMOVE GENERATOR

(See generator removal in generator in Charging System)

7. REMOVE LH ENGINE MOUNTING BRACKET AND GENERATOR BRACKET

8. REMOVE CHAIN DAMPERS

9. REMOVE CHAIN TENSIONER

10. REMOVE OIL FILTER

(See step 2 in oil and filter replacement Lubrication System)

11. w/Oil cooler:

REMOVE OIL COOLER

Remove the oil cooler relief valve, gasket and oil cooler.

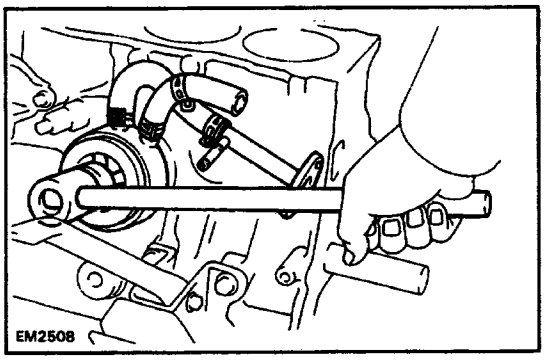

12. REMOVE RH ENGINE MOUNTING BRACKET, CHAMBER STAY AND GROUND STRAP

13. A/T:

REMOVE FLEXIBLE HOSE CLAMP

14. REMOVE OIL PRESSURE SENDER GAUGE OR SWITCH

15. REMOVE KNOCK CONTROL SENSOR

16. REMOVE FUEL FILTER AND BRACKET

17. REMOVE OIL STRAINER

Remove the 4 bolts, strainer and gasket.

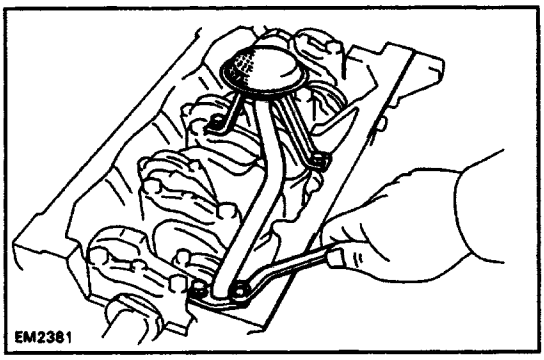

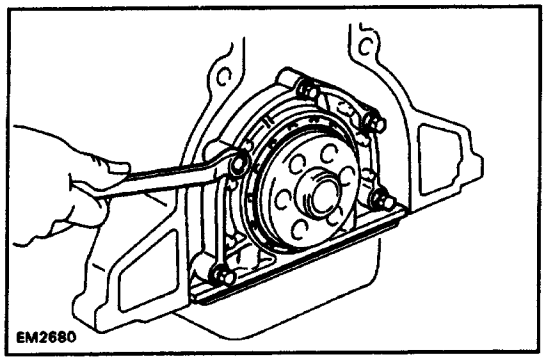

18. REMOVE REAR OIL SEAL RETAINER

Remove the 5 bolts, rear oil seal retainer and gasket.

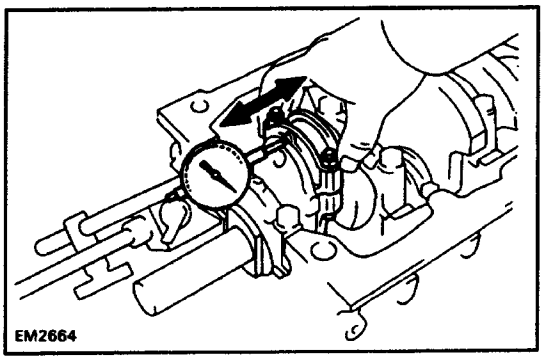

19. MEASURE CONNECTING ROD THRUST CLEARANCE

Using a dial gauge, measure the thrust clearance.

Standard clearance:

0.16 – 0.26 mm (0.063 – 0.0102 in.)

Maximum clearance:

0.3 mm(0.012 in.)

If clearance is greater than maximum, replace the connecting rod and/or crankshaft.

20. MEASURE CONNECTING ROD OIL CLEARANCE

(a) Using a punch or numbering stamp, mark connecting rods and caps to ensure correct reassembly.

(b) Remove the rod cap nuts.

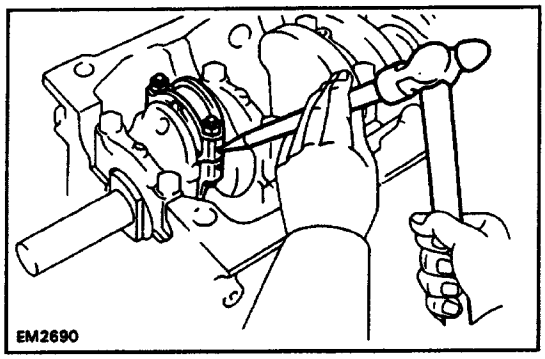

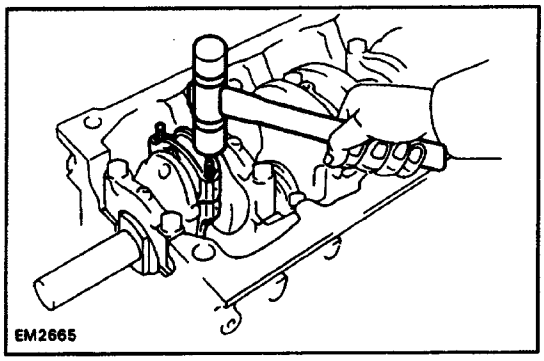

(c) Using a plastic–faced hammer, tap the connecting rod bolts lightly and lift oft the connecting rod cap.

HINT: Keep the bearing inserted in the connecting cap.

(d) Clean the bearing and crankshaft pins.

(e) Inspect each bearing for pitting and radial scratches. If bearing are damaged, replace the bearings.

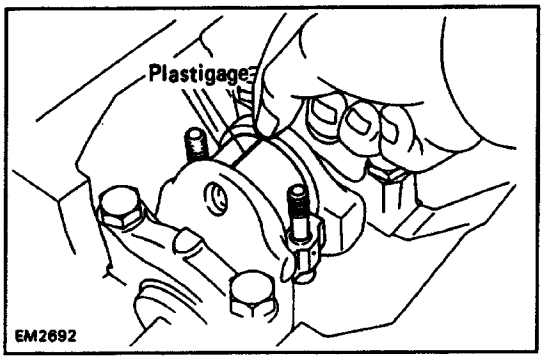

(f) Lay a strip of Plastigage across the crankshaft pin.

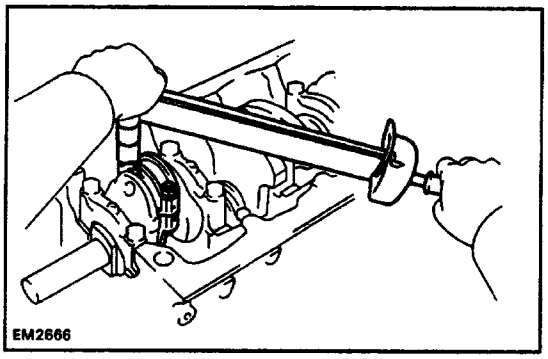
EM2666

(g) Align the connecting rod and cap marks and fit on the connecting rod cap. Install and torque the connecting rod cap nuts.

Torque: 69 N–m (700 kgf–cm, 51 ft–lbf)

HINT:

- Do not turn the crankshaft.
- Apply a light coat of engine oil on the nut threads and under the nut before installation.

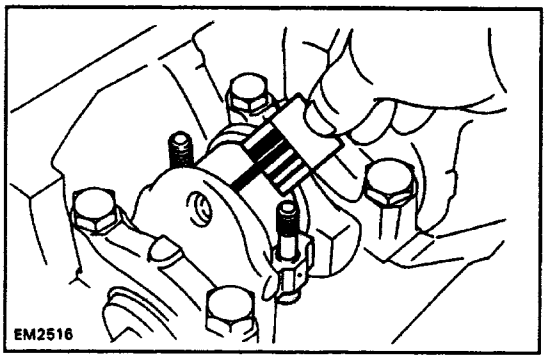
EM2516

(h) Remove the connecting rod cap.

(i) Measure the Plastigage at its widest point.

Standard clearance:

0.025 – 0.055 mm (0.0010 – 0.0022 fn.)

Maximum clearance:

0.10 mm (0.0039 in.)

If the clearance is greater than maximum, replace the bearings and/or grind the crank pins.

Undersized bearing:

U/S 0.25

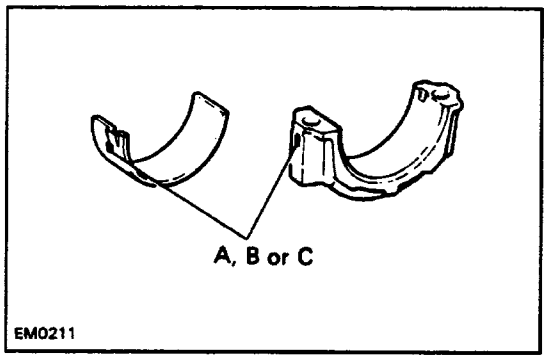

EM0211

(j) Clean any Plastigage from bearing and crankshaft pin.

HINT: If replacing a standard size bearing, replace with one having the same letter as marked on the bearing cap. There are 3 sizes of standard bearings supplied, marked A, B or C respectively.

mm (in.)

Size	Big End Inner Diameter	Crank Pin Diameter	Bearing Center Wall Thickness
A	56.000 – 56.006 (2.2047 – 2.2050)	52.988 – 53.000 (2.0861 – 2.0866)	1.484 – 1.488 (0.0584 – 0.0586)
B	56.006 – 56.012 (2.2050 – 2.2052)		1.488 – 1.492 (0.0586 – 0.0587)
C	56.012 – 56.018 (2.2052 – 2.2054)		1.492 – 1.496 (0.0587 – 0.0589)
U/S 0.25	56.000 – 56.018 (2.2047 – 2.2054)	52.701 – 52.711 (2.0748 – 2.0752)	1.626 – 1.636 (0.0640 – 0.0644)

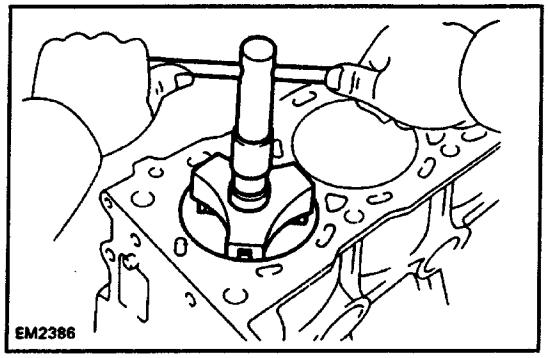

21. PUSH OUT PISTON AND CONNECTING ROD ASSEMBLY

(a) Remove all the carbon from the top of the bore to the top of the cylinder.

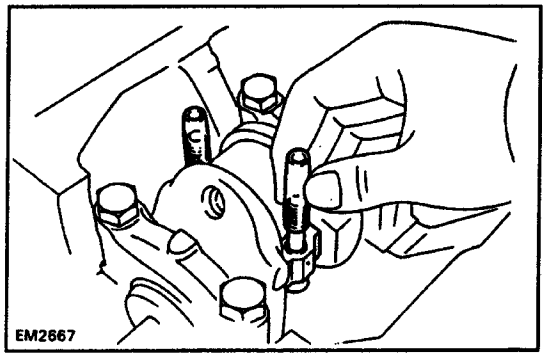

(b) Cover the connecting rod bolts with a short piece of hose to protect the crank pin from damage.

(c) Push the piston and connecting rod assembly out through the top of the cylinder block.

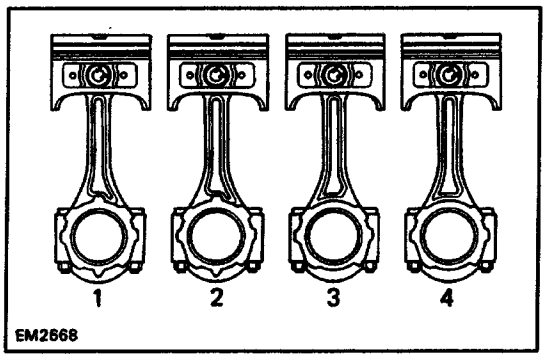

. (d) Arrange the piston and connecting rod caps in order.

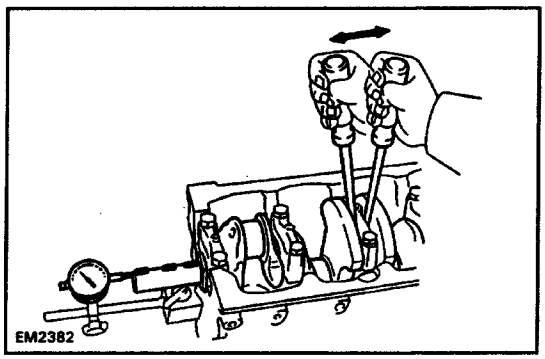

22. MEASURE CRANKSHAFT THRUST CLEARANCE

Using a dial gauge, measure the crankshaft thrust clearance while prying the crankshaft back and forth with a screwdriver.

Standard clearance:

0.02 – 0.22 mm (0.0008 – 0.0087 In.)

Maximum clearance:

0.3 mm (0.012 in.)

If the clearance is greater than maximum, replace the thrust washers as a set and/or crankshaft.

Thrust washer thickness:

Standard

2.690 – 2.740 mm (0.1059 – 0.1079 in.)

O/S 1.2 5

2.753 – 2.803 mm (0.1084 – 0.1104 in.)

O/S 2.50

2.815 – 2.865 mm (0.1108 – 0.1128 in.)

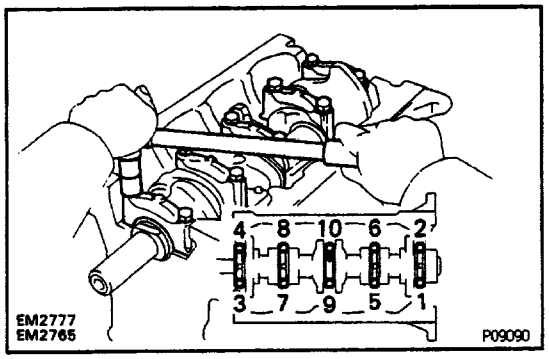

23. MEASURE CRANKSHAFT OIL CLEARANCE

(a) Gradually loosen and remove the crank shaft bearing cap bolts in the 3 passes and in the numerical order shown.

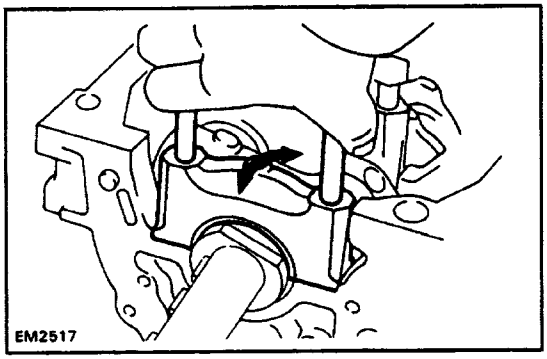

(b) Using the removed crank shaft bearing cap bolts, pry
the crank shaft bearing cap fore and aft, and remove it with the lower bearing and (No.3 journal only) thrust washers.

HINT:

- Keep the lower bearing inserted in the cap.
  Arrange the caps and lower thrust washers in correct order.

(c) Lift off the crankshaft.

HINT: Keep the upper bearings and upper thrust wa:
hers (for the No.3 journal only) inserted in the cylinder block.

(d) Clean the journals and bearings.

(e) Check the journals and bearings for pitting and scratches.
If the journal or bearing is damaged, grind or replace the crankshaft and replace the bearing.

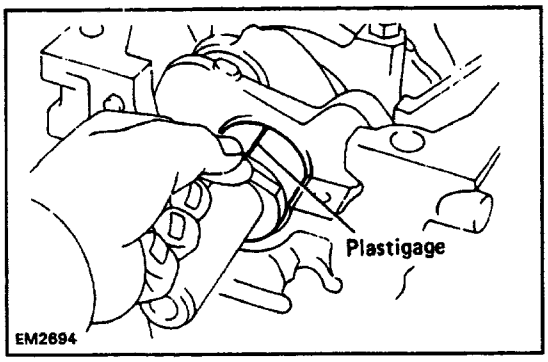

(f) Install the upper main bearings on the cylinder block and crankshaft.

(g) Lay a strip of Plastigage across the main journals.

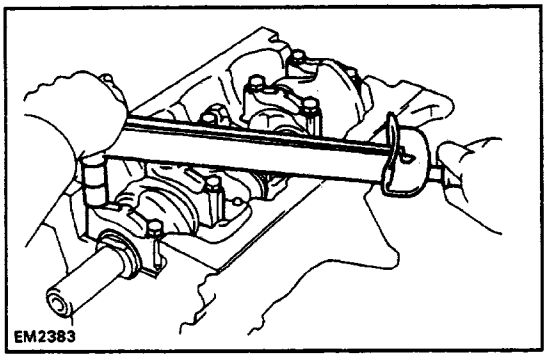

(h) Install the main bearing caps with the front mark facing forward. Install and torque the cap bolts.

Torque: 103 N–m (1,050 kgf–cm, 76 ft–lbf)

HINT:

- Do not turn the crankshaft.
- Apply a light coat of engine oil on the bolt thread: before installation.

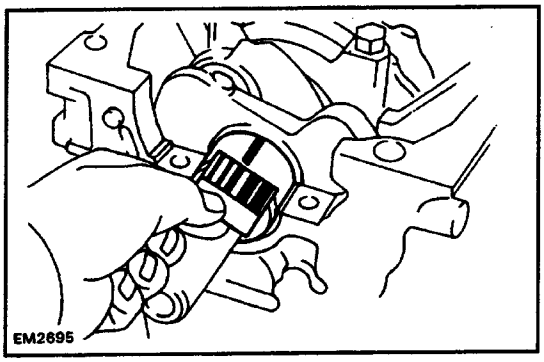

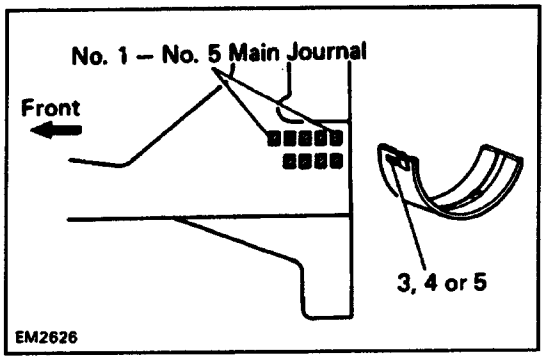

(i) Remove the crank shaft main bearing caps.

(j) Measure the Plastigage at its widest point.

Standard clearance:

0.025 – 0.055 mm (0.0010 – 0.0022 in.)

Maximum clearance:

0.08 mm (0.0031 in.)

If the clearance is greater than maximum, replace the bearings and/or grind the main journals.

Undersized bearing:

U/S 0.25

(k) Clean out the pieces of Plastigage from the bearings and journals.

HINT: If using a standard bearing, replace with one having the same number as marked on the cylinder block. There are 3 sizes of standard bearings, marked 3, 4, 5 accordingly.

mm (in.)

Size	Cylinder Block Main Journal Bore	Main Journal Diameter	Bearing Center Wall Thickness
3	64.004 – 64.010 (2.5198 – 2.5201)	59.984 – 60.000 (2.3616 – 2.3622)	1.988 – 1.992 (0.0783 – 0.0784)
4	64.010 – 64.016 (2.5201 – 2.5203)		1.992 – 1.996 (0.0784 – 0.0786)
5	64.016 – 64.022 (2.5203 – 2.5205)		1.996 – 2.000 (0.0786 – 0.0787)
U/S 0.25	64.004 – 64.022 (2.5198 – 2.5205)	59.701 – 59.711 (2.3504 – 2.3508)	2.126 – 2.136 (0.0837 – 0.0841)

24. REMOVE CRANKSHAFT

(a) Lift out the crankshaft.

(b) Remove the upper main bearings from the cylinder block.

(c) Arrange the caps and bearings in order.

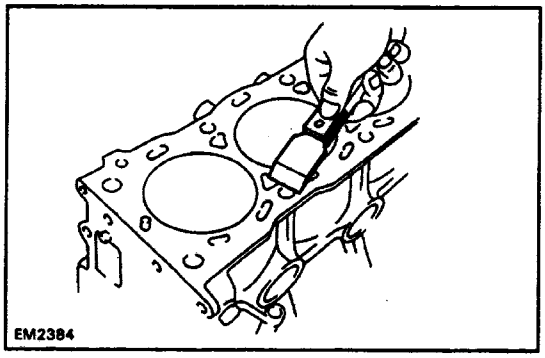

CYLINDER BLOCK INSPECTION

1. REMOVE GASKET MATERIAL

Using a gasket scraper, remove all gasket material from cylinder block surfaces.

2. CLEAN CYLINDER BLOCK

Using a soft brush and solvent, clean the block.

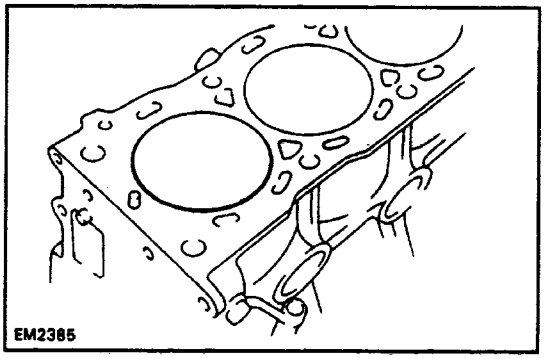

3. INSPECT CYLINDERS

Visually inspect cylinders for vertical scratches.

If deep scratches are present, rebore all 4 cylinders.

(See page EG1–67)

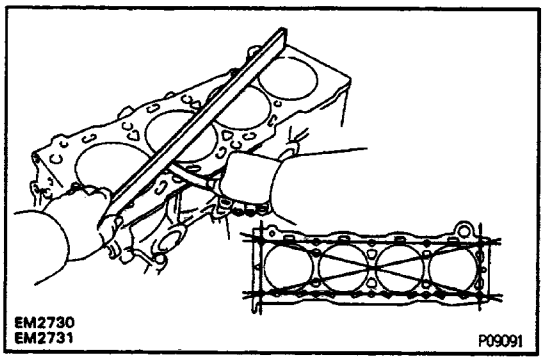

4. INSPECT CYLINDER BLOCK WARPAGE

Warpage limit:

0.05 mm (0.0020 in.)

If warpage is greater than specified value, replace the cylinder block.

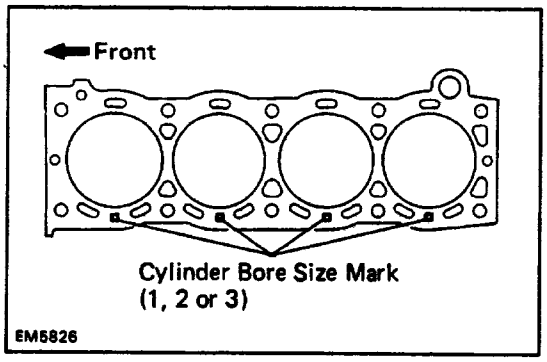

5. MEASURE CYLINDER BORE

HINT: There are 3 sizes of the standard cylinder bore diameter, marked ”11’, ”2”, and ”3”, accordingly. The mark is stamped on the cylinder block.

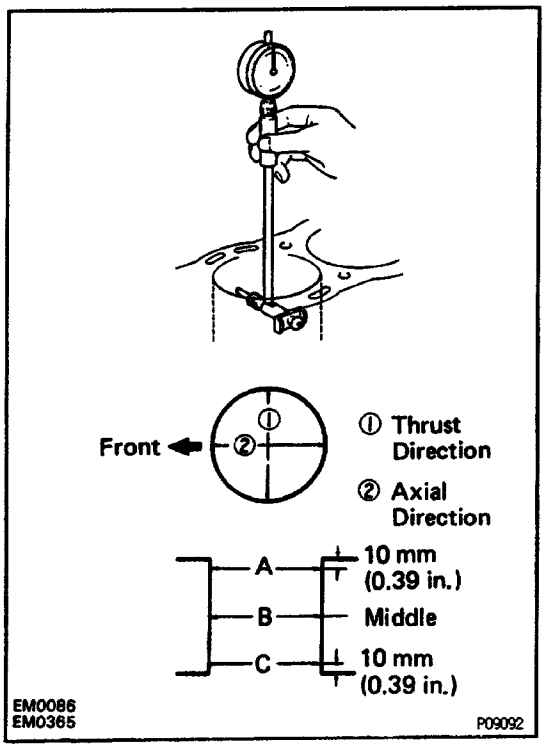

Using a cylinder gauge, measure the cylinder bore diameter at positions A, B and C in the thrust and axial directions.

Standard diameter:

STD

Mark “1”

92.00 – 92.01 mm (3.6220 – 3.6224 in.)

Mark ”2”

92.01 – 92.02 mm (3.6224 – 3.6228 in.)

Mark “3”

92.02 – 92.03 mm (3.6228 – 3.6232 in.)

O/S 0.50

92.50 – 92.53 mm (3.6417 – 3.6429 in.)

O/S 1.00

93.00 – 93.03 mm (3.6614 – 3.6626 in.)

Maximum diameter:

STD

92.23 mm (3.6311 in.)

O/S 0.50

92.73 mm (3.6508 in.)

O/S 1.00

93.23 mm (3.6705 in.)

If the diameter is greater than maximum, rebore all 4 cylinders, or replace the cylinder block.

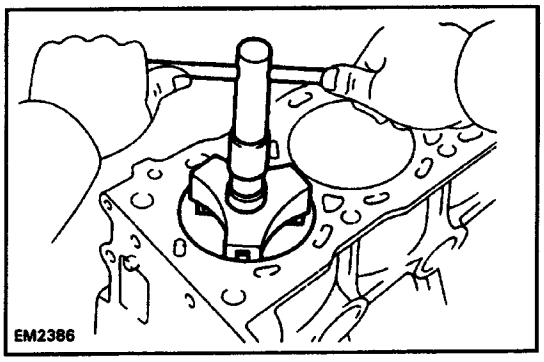

6. REMOVE CYLINDER RIDGE

if wear is.. less than 0.2 mm (0.008 in.), use a ridge reamer to machine the top of the cylinder.

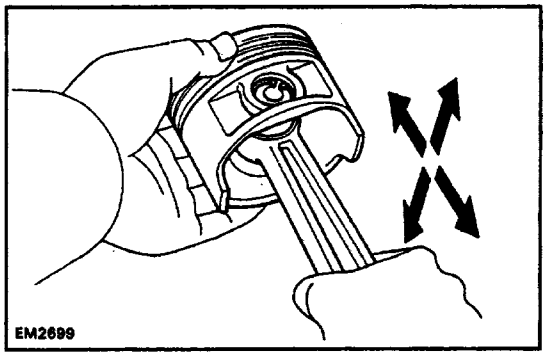

DISASSEMBLY OF PISTON AND CONNECTING ROD ASSEMBLY

1. CHECK FIT BETWEEN PISTON AND PIN

Try to move the piston back and forth on the piston pin. If any movement is felt, replace the piston and pin.

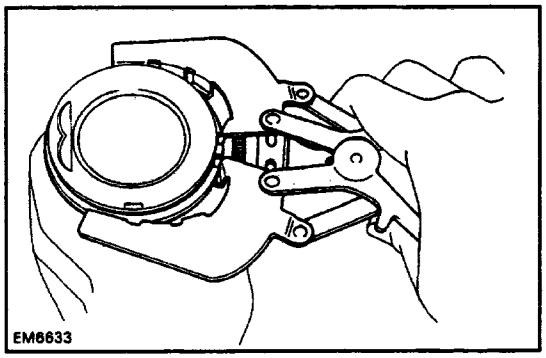

2. REMOVE PISTON RINGS

(a) Using a piston ring expander, remove the compression rings.

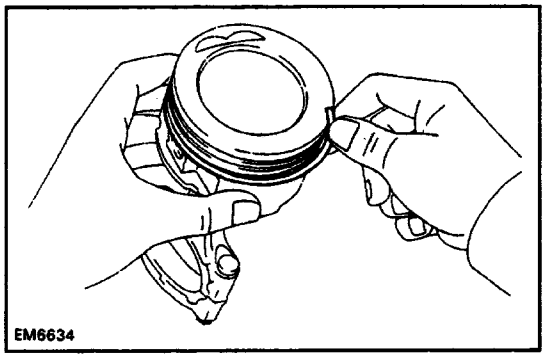

(b) Remove the 2 side rails and oil ring expander by hand.

HINT: Keep the rings for each cylinder separated.

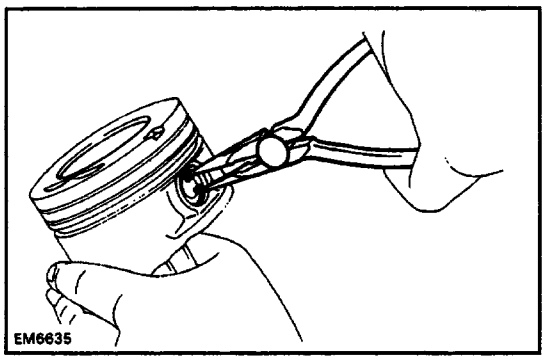

3. DISCONNECT CONNECTING ROD FROM PISTON

(a) Using needle – nose pliers, remove the snap rings from the piston.

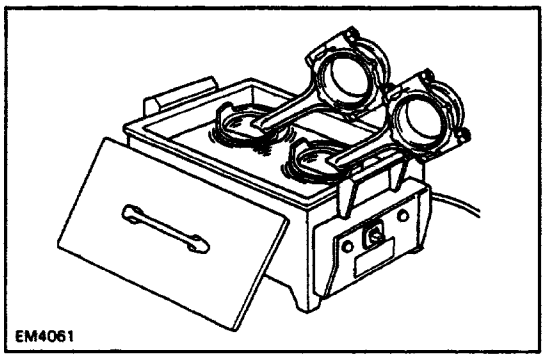

(b) Heat the piston in hot water approx. 60˚C(140˚F).

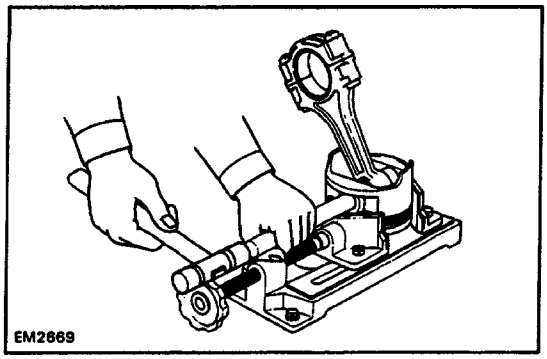

(c) Using a plastic–faced hammer and brass bar, lightly tap out the piston pin from the piston.

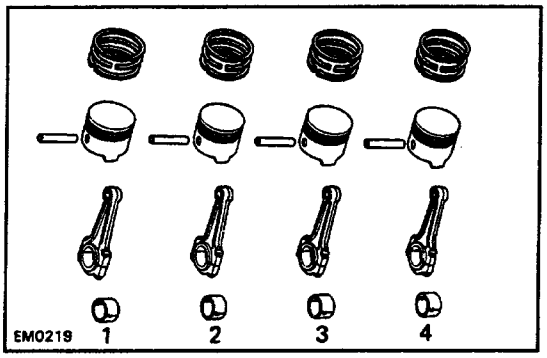

HINT:
- The piston and pin are a matched set.
- Keep the piston, pin, rings and connecting rod together for each cylinder.

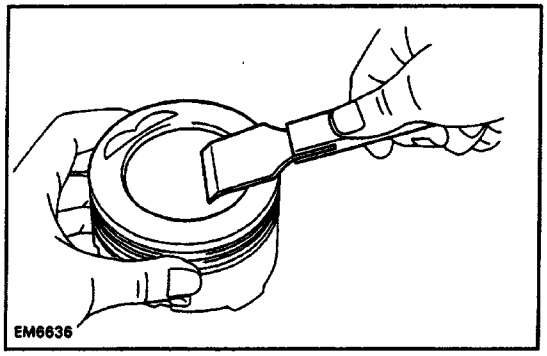

INSPECTION OF PISTON AND CONNECTING ROD

1. CLEAN PISTON

(a) Using a gasket scraper, remove the carbon from the piston top.

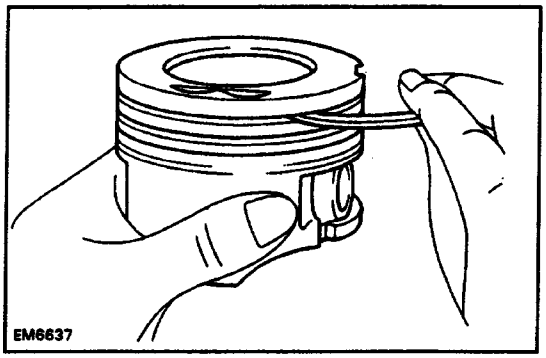

(b) Using a groove cleaning tool or broken ring, clean the ring grooves.

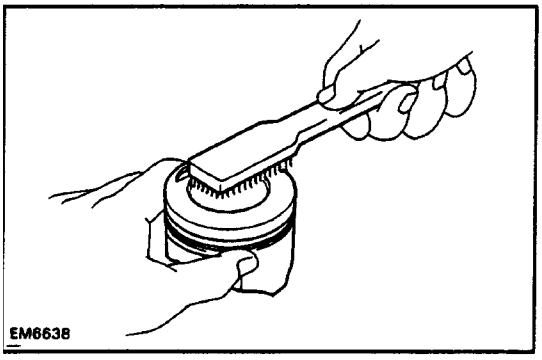

(c) Using solvent and a brush, thoroughly clean the piston.

NOTICE: Do not use a wire brush.

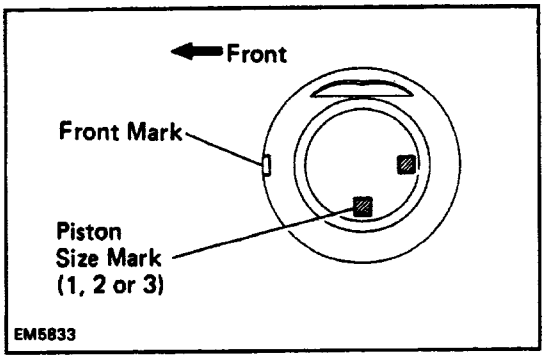

2. INSPECT PISTON DIAMETER AND OIL CLEARANCE

HINT: There are 3 sizes of the standard piston diameter, marked "1 ", "2", and "3", accordingly. The mark is stamped on the top of the piston.

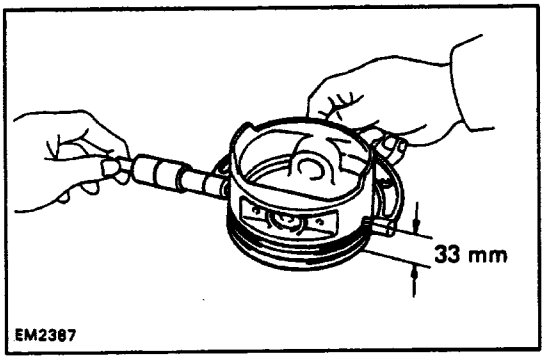

(a) Using a micrometer and with the piston upside down, measure the piston diameter at right angles to the piston pin hole center line, at the indicated distance from the piston head.

Distance: 33 mm (1.30 In.)
Piston diameter:
STD
Mark "1"
91.975 – 91.985 mm (3.6211 – 3.6214 in.)
Mark "2"
91.985 – 91.995 mm (3.8214 – 3.6218 in.)
Mark "3"
91.995 – 92.005 mm (3.6218 – 3.6222 in.)
O/S 0.50
92.475 – 92.505 mm (3.6407 – 3.6419 in.)
O/S 1.00
92.975 – 93.005 mm (3.6604 – 3.661 6 in.)

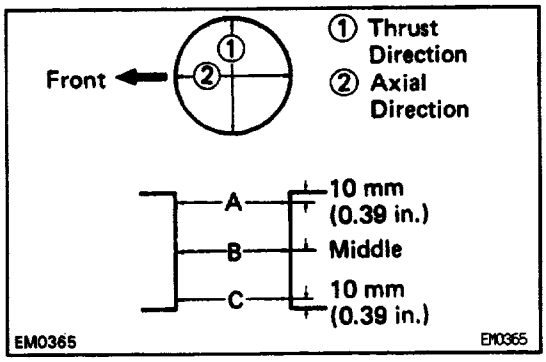

(b) Measure the cylinder bore diameter in thrust directions (See page EG –xx) and subtract the piston diameter measurement from the cylinder bore diameter measurement.

Piston clearance:
0.015 – 0.035 mm (0.00013 – 0.0014 in.)

If not within specification, replace the pistons. If necessary, rebore or replace the cylinder block.

HINT: When installing a standard piston, install one with the same mark as the standard bore diameter mark on the cylinder block.

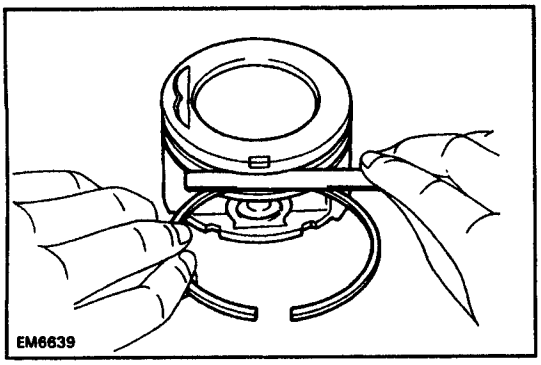

3. MEASURE CLEARANCE BETWEEN PISTON GROOVE AND PISTON RING

Using a thickness gauge, measure the clearance between the piston ring and the ring land.

Standard ring groove clearance:
0.03 – 0.07 mm (0.0012 – 0.0028 in.)

Maximum ring groove clearance:
0.2 mm (0.008 in.)

If the clearance is greater than maximum, replace the piston ring and/or piston.

4. MEASURE RING END GAP

(a) Insert the piston ring into the cylinder.

(b) Using a piston, push the ring a little beyond the bottom of the ring travel.

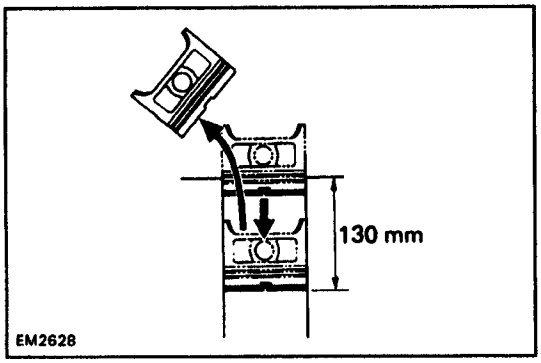

(130 mm (5.12 in.) from top surface of cylinder block)

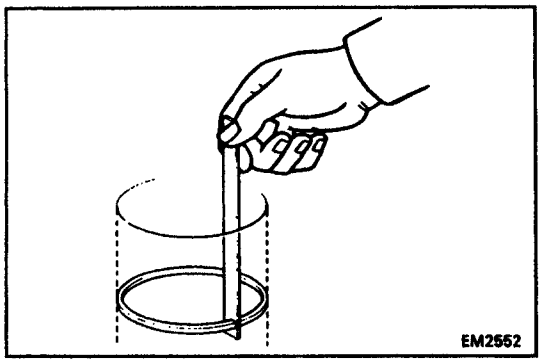

(c) Using a thickness gauge, measure the end gap.

Standard ring end gap:
No.1
0.25 – 0.47 mm (0.0098 – 0.0185 in.)
No.2
0.60 – 0.82 mm (0.0236 – 0.0323 in.)
Oil
0.20 – 0.57 mm (0.0079 – 0.0224 in.)

Maximum ring end gap:
No.1
1.07 mm (0.0421 in.)
No.2 .
1.42 mm (0.0559 in.)
Oil
1.17 mm (0.0461 in.)

If the gap is greater than maximum, replace the ring.
Do not file the ring end.

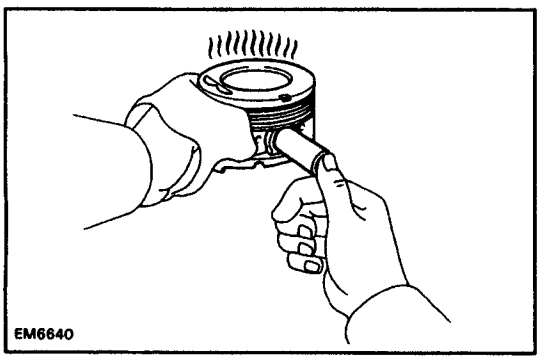

5. INSPECT PISTON PIN FIT

At 80 ˚C (176˚F), you should able to push the pin into the piston with your thumb.

If the pin can be installed at a lower temperature, replace it and the piston.

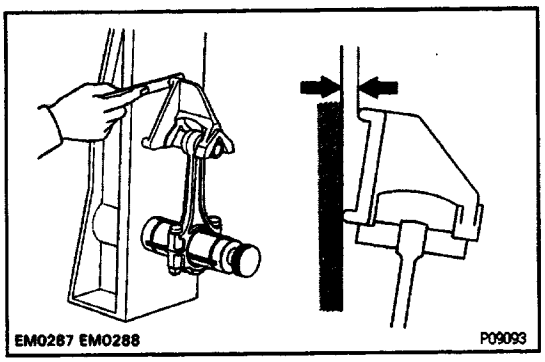

6. INSPECT CONNECTING RODS

(a) Using a rod aligner, check the connecting rod alignment.

If the rod is out–of –alignment or twisted, replace the connecting rod.

- Check that the rod is out–of–alignment.

  Maximum out–of –alignment:

  0.06 mm (0.0020 in.) per 100 mm (3.94 in.)

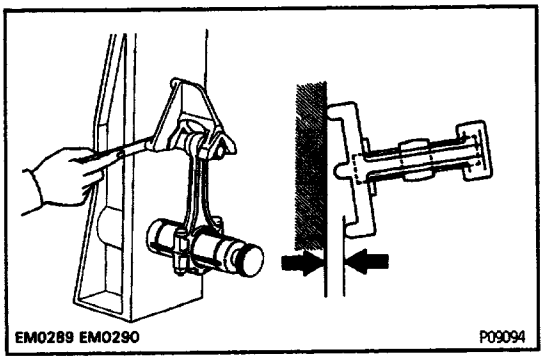

- Check that the rod is not twisted.

  Maximum twist:

  0.15 mm (0.0059 in.) per 100 mm (3.94 in.)

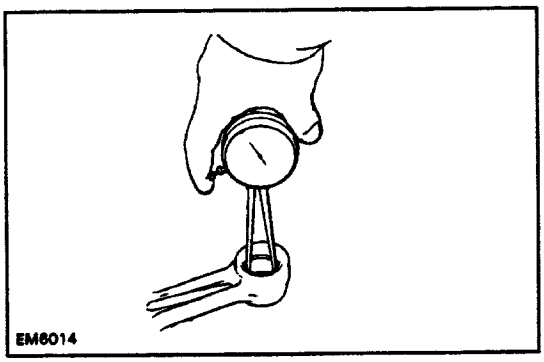

(b) Measure the oil clearance between the rod bushing and piston pin.

- Using an inside dial indicator, measure the inside diameter of the rod bushing.

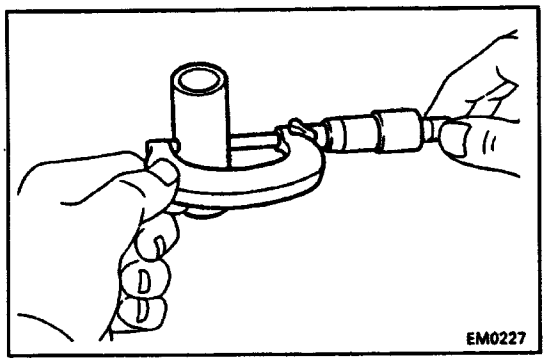

- Using a micrometer, measure the diameter of the piston pin.
- Check that the difference between the measurements is less than the oil clearance limit.

  Standard oil clearance:

  0.005 – 0.011 mm (0.0002 – 0.0004 in.)

  Maximum oil clearance:

  0.015 mm (0.0006 In.)

  If the clearance is greater than maximum, replace the rod bushing.

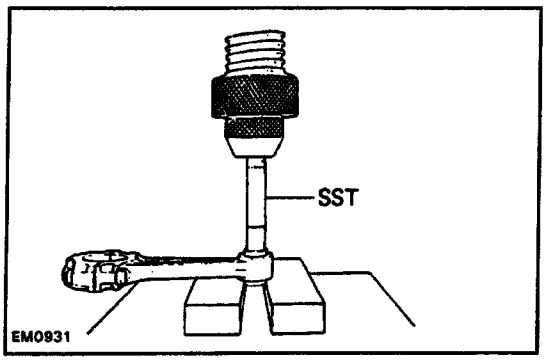

ROD BUSHING REPLACEMENT

1. REMOVE ROD BUSHING

Using SST, remove the rod bushing from the connecting rod.

SST 09222–30010

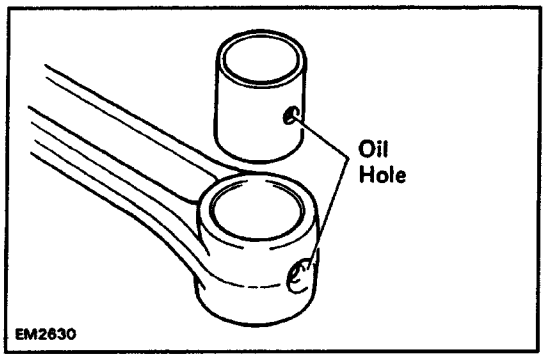

2. INSTALL NEW ROD BUSHING

Using SST, install the rod bushing to the connecting rod.

SST 09222 – 30010

HINT: Align the bushing oil hole with the connecting rod oil hole.

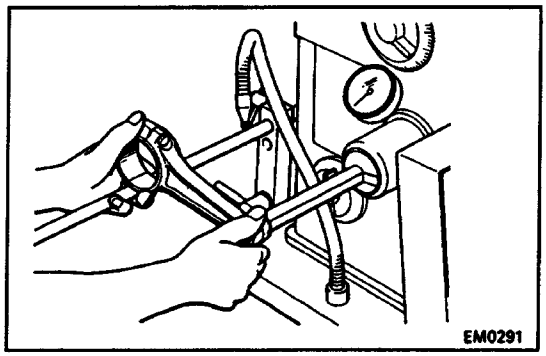

3. HONE NEW BUSHING AND CHECK PIN FIT IN CONNECTING ROD

(a) Hone the new bushing and check that the oil clearance is within standard specification.

Standard oil clearance:

0.005 – 0.011 mm (0.0002 – 0.0004 in.)

(b) Check the pin fit at the normal room temperature.

Coat the pin with engine oil and push the pin into the rod with thumb pressure.

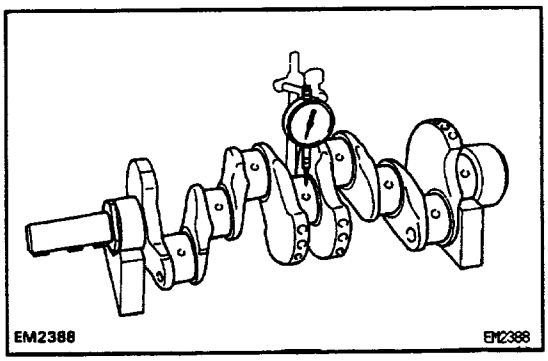

CRANKSHAFT INSPECTION AND REPAIR

1. MEASURE CRANKSHAFT FOR RUNOUT

(a) Place the crankshaft on V–blocks.

(b) Using a dial gauge, measure the runout at the center journal.

Maximum circle runout:

0.1 mm (0.004 in.)

If the runout is greater than maximum, replace the crankshaft.

HINT: Use a long spindle on the dial gauge.

2. INSPECT MAIN JOURNALS AND CRANK PINS

(a) Using a micrometer, measure the diameter of the main journal and crank pin.

Main journal diameter:

59.984 –60.000 mm (2.3616 – 2.3622 in.)

Crank pin diameter:

52.988 – 53.000 mm (2.0861 – 2.0866 in.)

If journals are worn, regrind or replace the crankshaft.

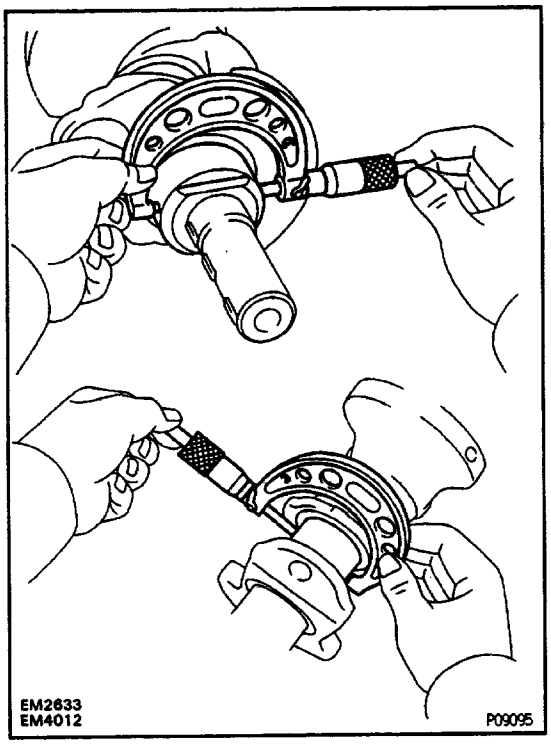

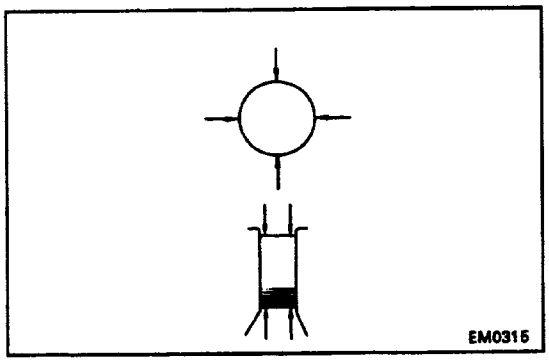

(b) Measure the journals for out–of–round and taper as shown.

Maximum taper:

0.01 mm (0.0004 in.)

Maximum out –of –round:

0.01 mm (0.0004 in.)

If taper and out–of–round are greater than maximum, regrind and/or replace the crankshaft.

3. GRIND CRANK PIN AND/OR MAIN JOURNAL, IF NECESSARY

(a) Grind the crank pins and/or main journals to the undersized finished diameter.

Bearing size (U/S 0.25)

Main journal finished diameter:

59.701 – 59.711 mm (2.3504 – 2.3508 in.)

Crank pin finished diameter:

52.701 – 52.711 mm (2.0748 – 2.0752 in.)

(b) Install a new pin and/or main undersized bearings.

CRANKSHAFT OIL SEALS REPLACEMENT

HINT: There are 2 methods (A and B) to replace the oil seal which are as follows:

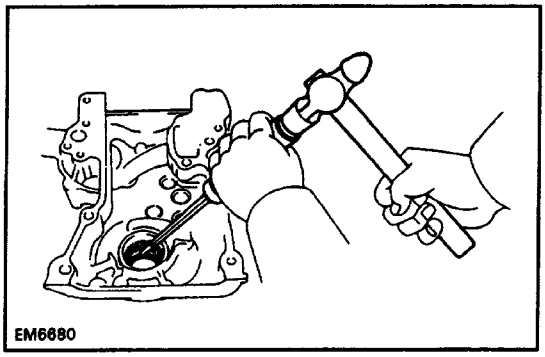

1. REPLACE CRANKSHAFT FRONT OIL SEAL

A. If timing chain cover is removed from cylinder block:

(a) Using a screwdriver and hammer, tap out the oil seal.

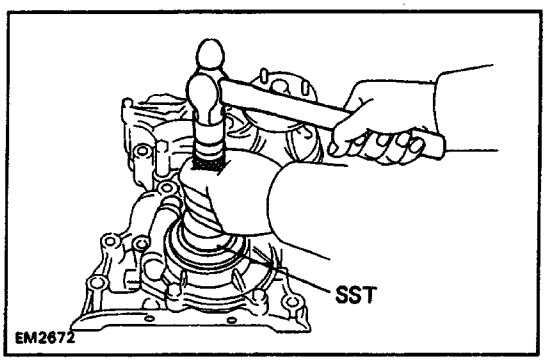

(b) Using SST and a hammer, tap in the oil seal until its surface is flush with the timing chain cover edge.

SST 09223–50010

(c) Apply MP grease to the oil seal lip.

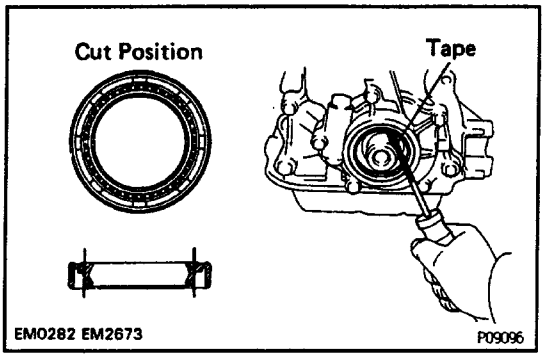

B. If timing chain cover is installed to the cylinder block:

(a) Using a knife, cut off the oil seal lip.

(b) Using a screwdriver, pry out the oil seal.

NOTICE: Be careful not to damage the crankshaft. Tape the screwdriver tip.

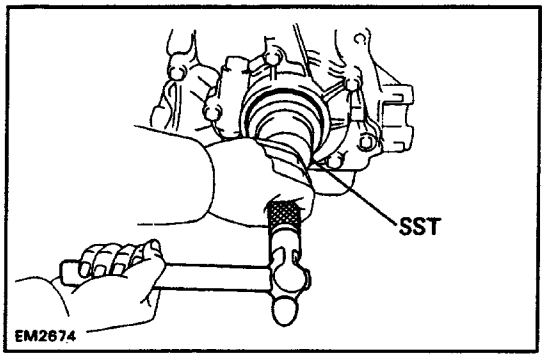

(c) Apply MP grease to a new oil seal lip.

(d) Using SST and a hammer, tap in the oil seal until its surface is flush with the timing chain cover edge.

SST 09223–50010

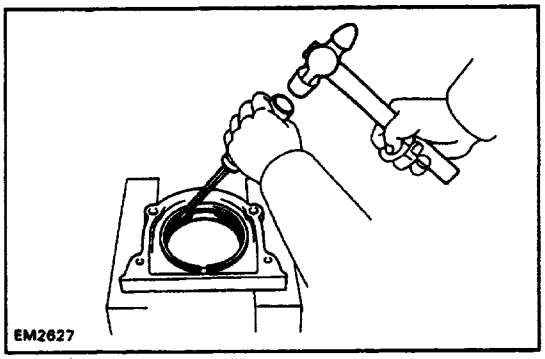

2. REPLACE CRANKSHAFT REAR OIL SEAL

A. If rear oil seal retainer is removed from cylinder block:

(a) Using a screwdriver and hammer, tap out the oil seal.

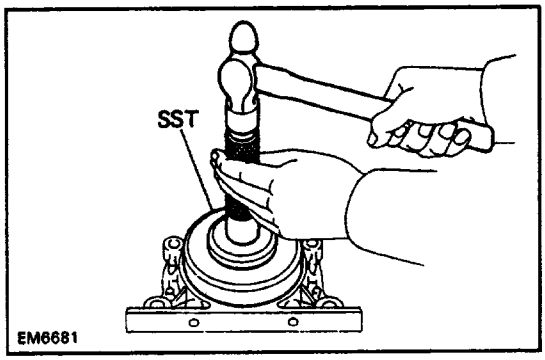

(b) Using SST and a hammer, tap in a new oil seal until its surface is flush with the rear oil seal retainer edge.
SST 08223–15030, 09608–35014 (09608–06020)

(c) Apply MP grease to the oil seal lip.

B. If rear oil seal retainer is installed to cylinder block:

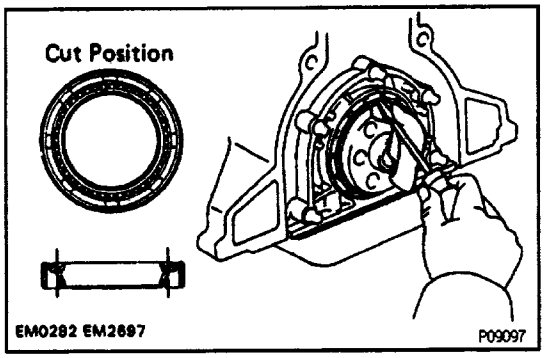

(a) Using a knife, cut oft the oil seal lip.

(b) Using a screwdriver, pry out the oil seal.

NOTICE: Be careful not to damage the crankshaft. Tape the screwdriver tip.

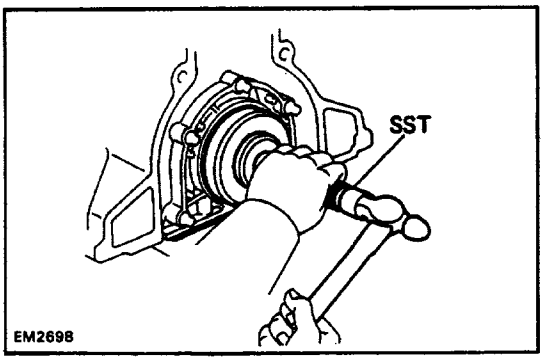

(c) Apply MP grease to a new oil seal lip.

(d) Using SST and a hammer, tap in the oil seal until its surface is flush with the rear oil seal retainer edge.
SST 09223–15030, 09608–35014 (09608–06020)

CYLINDERS BORING

Size	Outside Diameter mm (in.)
O/S 0.50	92.475 – 92.505 (3.6407 – 3.6419)
O/S 1.00	92.975 – 93.005 (3.6604 – 3.6616)

V01771

1. SELECT OVERSIZED PISTON

O/S pistons with pins are available in the sizes listed. Replace pistons in matched sets. Take the largest bore measured and select the oversized piston for that bore. Bore all cylinders for the oversized piston selec–ted.

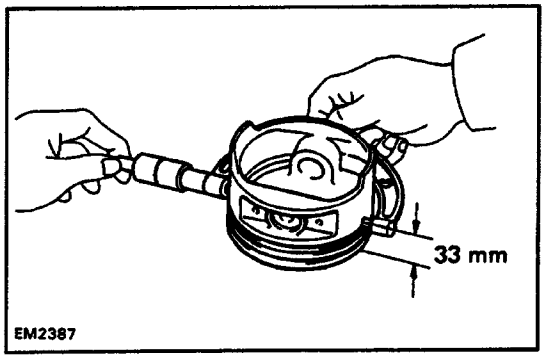

2. CALCULATE DIMENSION TO BORE CYLINDERS

(a) Using a micrometer, measure the piston diameter at right angles to the piston pin center line, 33 mm (1.30 in.) from the piston head.

(b) Calculate the size each cylinder is to be rebored as follows:

Size to be rebored = P + C – H

P = piston diameter

C = piston clearance

0.015 – 0.035 mm (0.0006 – 0.0014 in.)

H = allowance for honing

0.02 mm (0.0008 in.) or less

3. BORE AND HONE CYLINDERS TO CALCULATED DIMENSIONS

Maximum honing:

0.02 mm t0.0008 in.)

NOTICE: Excess honing will destroy the finished round-ness.

PISTON AND CONNECTING ROD ASSEMBLY

1. ASSEMBLE PISTON AND CONNECTING ROD

(a) Install a new snap ring on one side of the piston pin hole.

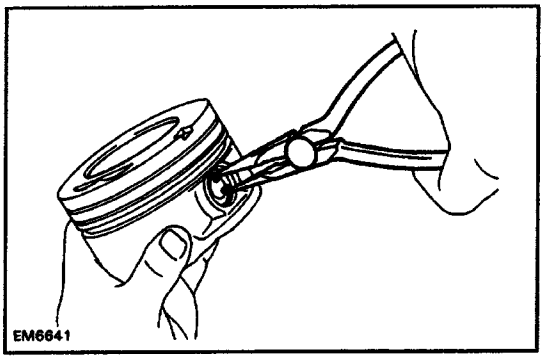

(b) Heat the piston in hot water to approx. 80˚ C (176˚ F).

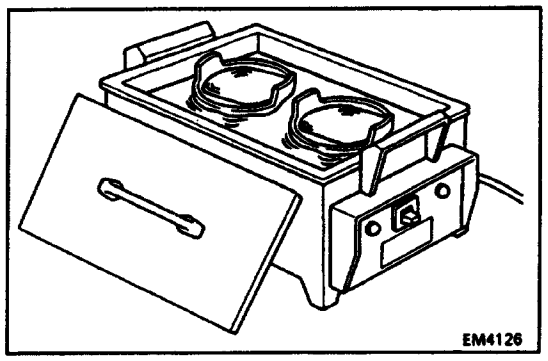

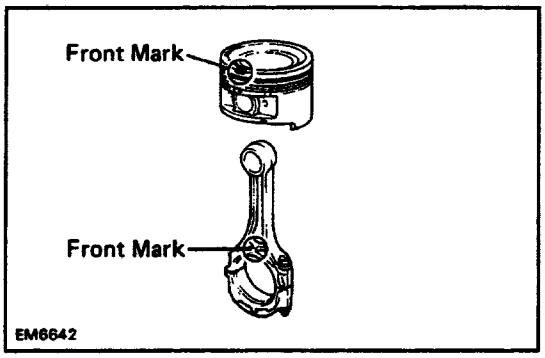

(c) Align the notch on the piston with the mark on the rod and push the piston pin in with your thumb.
(d) Install a new snap ring on the other side of the pin.

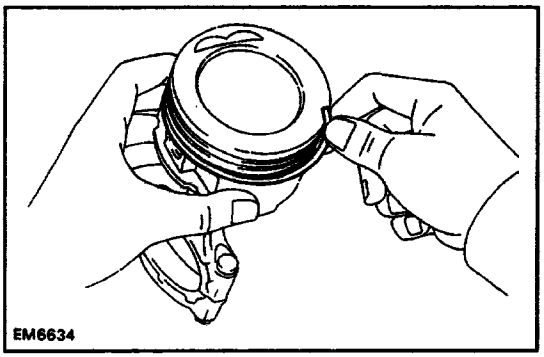

2. PLACE RINGS ON PISTON

(a) Install the oil ring expander and 2 side rails by hand.

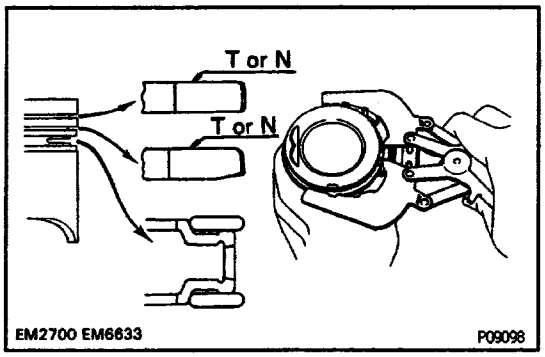

(b) Using a ring expander, install the 2 compression rings with the code marks facing upward.

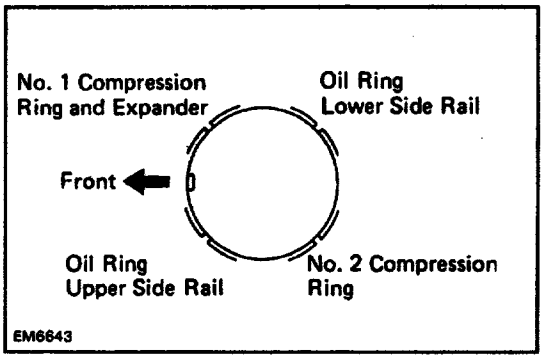

(c) Position the piston rings so that the ring end gaps are as shown.

NOTICE: Do not align the end gaps.

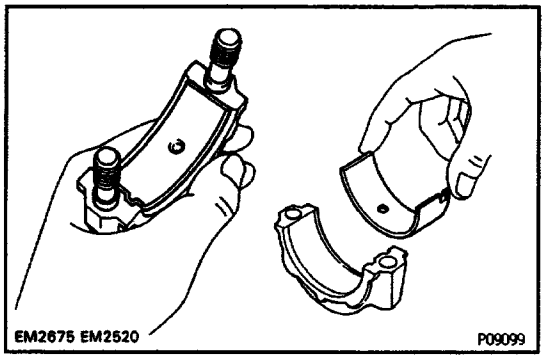

3. INSTALL BEARINGS

(a) Install the bearing in the connecting rod and rod cap.
(b) Lubricate the face of the bearings with engine oil.

NOTICE: Install the bearings with the oil hole in the connecting rod.

INSTALLATION OF CRANKSHAFT, PISTON AND CONNECTING ROD ASSEMBLY

(See Component for Removal and Installation)

HINT:

- Thoroughly clean all parts to be assembled.
- Before installing parts, apply new engine oil to all sliding and rotating surfaces.
- Replace all gaskets, O–ring and oil seals with new parts.

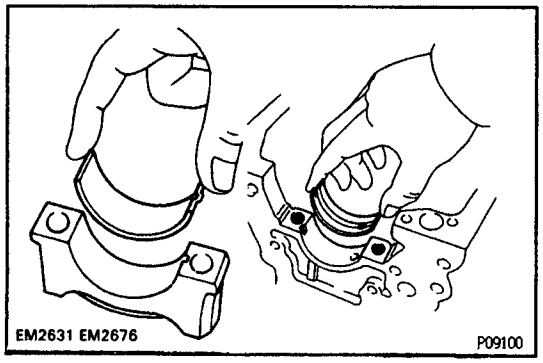

1. INSTALL MAIN BEARINGS

Install the bearing in the cylinder block and bearing caps.

NOTICE: Install the upper bearing with the oil hole in the block.

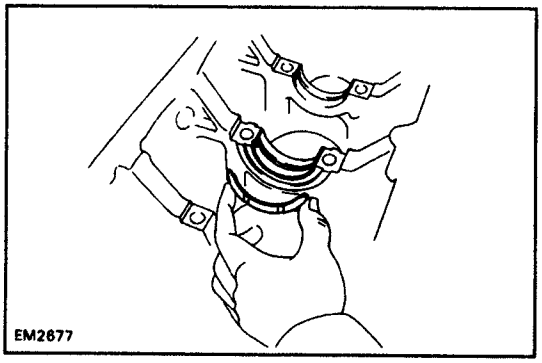

2. INSTALL UPPER THRUST WASHERS

Install the thrust washers under the No.3 main bearing cap position of the block with the oil grooves facing outward.

3. PLACE CRANKSHAFT ON CYLINDER BLOCK

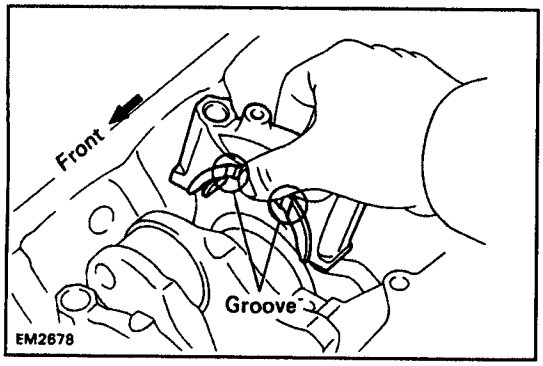

4. INSTALL MAIN BEARING CAPS WITH LOWER THRUST WASHERS

HINT: Each bearing cap is numbered.

(a) Install the thrust washers on the No.3 bearing cap with the grooves facing outward.

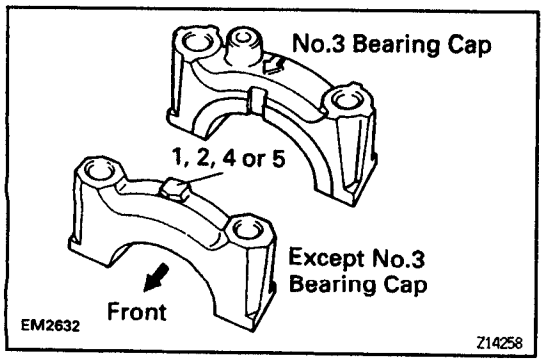

(b) Install the bearing caps in their proper locations.

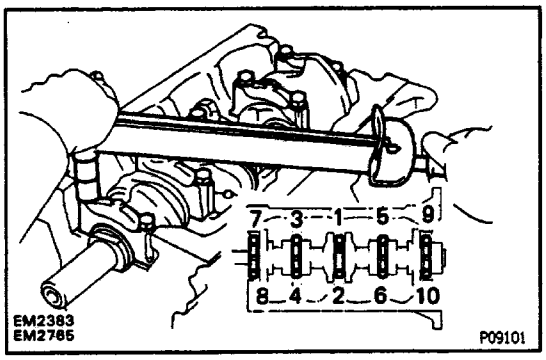

(c) Apply a light coat of engine oil on the threads and under the cap bolt heads.
(d) Install and tighten the cap bolts in 2 or 3 passes and in the sequence shown.
Torque: 103 N–m (1,050 kgf–cm, 76 ft–lbf)
(e) Check that the crankshaft turns smoothly.
(f) Check the crankshaft thrust clearance.
(See step 22 in cylinder block disassembly in cylinder block)

5. INSTALL PISTON AND CONNECTING ROD ASSEMBLY

(a) Cover the rod bolts with a short piece of hose to protect the crankshaft from damage.

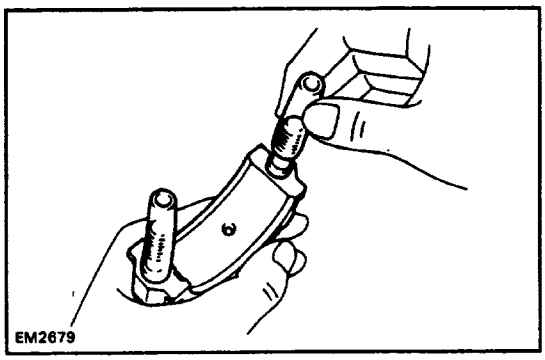

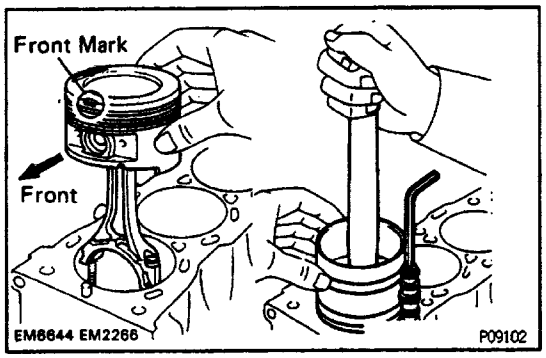

(b) Lubricate the cylinder bore and rod journal with clean engine oil.
(c) Using a ring compressor, tighten the compressor snugly but NOT tightly against the piston and gently tap the correctly numbered piston and rod assembly into its cylinders with a wooden hammer handle or similar object. Make sure the notch and mark are facing forward.

HINT: If the ring compressor is wound too tightly around the piston, the bottom edge of the ring compressor will catch against the beveled surface at the top of the cylinder when tapping the piston in.

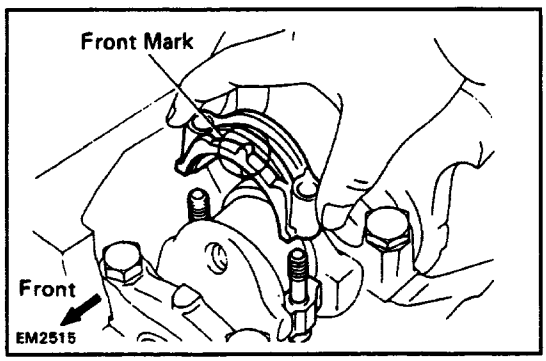

6. INSTALL CONNECTING ROD CAPS

(a) Match the numbered cap with the numbered rod.
(b) Install the cap with the front mark facing forward.

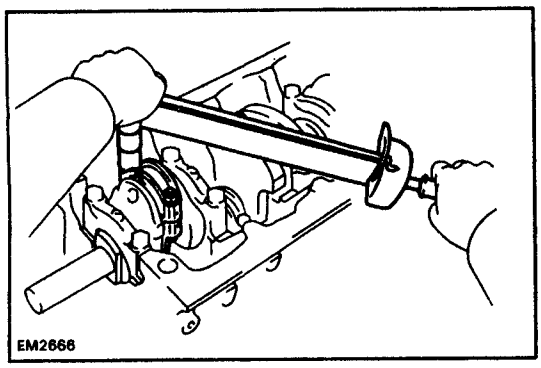

(c) Apply a light coat of engine oil on the threads and under the rod nuts.
(d) Install and tighten the rod nuts alternately and in 2 or 3 passes.
Torque: 69 N–m (700 kgf–cm, 51 ft–lbf)
(e) Check that the crankshaft turns smoothly.
(f) Check the rod thrust clearance.
(See step 22 in cylinder block disassembly in cylinder block)

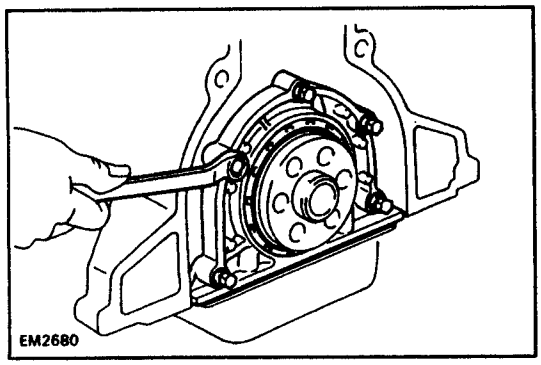

CYLINDER BLOCK ASSEMBLY

(See Components for Removal and Installation)
1. INSTALL REAR OIL SEAL RETAINER
Install a new gasket and the retainer with the 4 bolts.
Torque the bolts.
Torque: 18 N–m (180 kgf–cm. 13 ft–lbf)

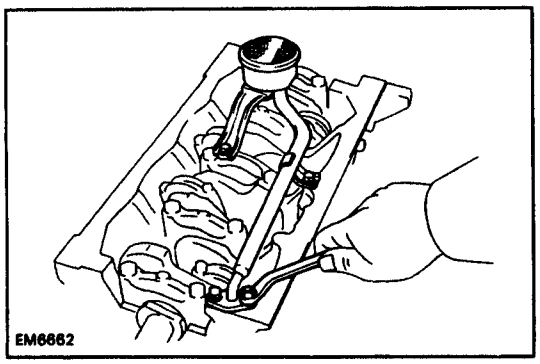

2. INSTALL OIL STRAINER
(a) Clean the oil strainer.
(b) Place the gasket in place and install the oil strainer assembly with the 4 bolts. Torque the bolts.
Torque: 13 N–m (130 kgf–cm, 9 ft–lbf)

3. INSTALL FUEL FILTER BRACKET AND FILTER
4. INSTALL KNOCK CONTROL SENSOR
5. INSTALL OIL PRESSURE SENDER GAUGE
6. A/T:
INSTALL FLEXIBLE HOSE CLAMP
7. INSTALL RH ENGINE MOUNTING BRACKET, CHAMBER STAY AND GROUND STRAP

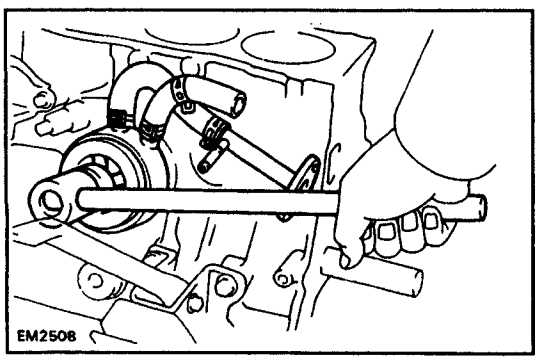

8. w/OIL COOLER:
INSTALL OIL COOLER
(a) Replace the O–ring.
(b) Install a new gasket on the oil cooler relief valve.
(c) Install the oil cooler with the oil cooler relief valve.
Torque: 69 N–m (700 kgf–cm. 51 ft–lbf)
9. INSTALL OIL FILTER
(See step 2 in oil and filter replacement in Lubrication System)

10. INSTALL CHAIN TENSIONER

Torque: 19 N–m (195 kgf–cm, 14 ft–lbf)

11. INSTALL CHAIN DAMPERS

Torque: 22 N–m (220 kgf–cm, 16 ft–lbf)

12. INSTALL GENERATOR BRACKET AND LH ENGINE MOUNTING BRACKET

13. INSTALL TIMING CHAIN

(See timing chain installation in timing chain)

14. INSTALL GENERATOR

15. INSTALL CYLINDER HEAD

(See cylinder head installation in cylinder head)

16. REMOVE ENGINE STAND

17. INSTALL REAR END PLATE

18. INSTALL FLYWHEEL OR DRIVE PLATE

Install the flywheel (M / T) or spacer, drive plate, spacer (A / T) on the crankshaft with the 6 bolts.

Torque the bolts.

Torque:

M/T: 108 N–m (1,100 kgf–cm, 80 ft.–lbf)

A/T: 83 N–m (850 kgf–cm, 61 ft–lbf)

ENGINE INSTALLATION

1. M/T:

INSTALL CLUTCH DISC AND COVER TO FLYWHEEL

(See clutch unit installation in Clutch)

2. CONNECT TRANSMISSION TO ENGINE

3. PLACE ENGINE WITH TRANSMISSION IN VEHICLE

(a) Attach the engine hoist chain to the lifting brackets on the engine.

(b) Lower the engine with transmission into the engine compartment.

4. 4WD:

PLACE JACK UNDER TRANSMISSION

Be sure to put a wooden block between the jack and the transmission pan.

5. JACK UP AND PUT TRANSMISSION ONTO MEMBER

6. INSTALL ENGINE MOUNTING TO FRAME BRACKET

(a) Align the engine mounting and frame bracket.

(b) Install the engine mounting bolts on each side of the engine.

(c) Remove the hoist chain.

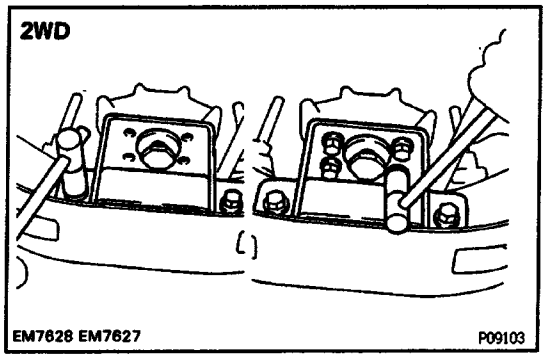

7. 2WD:

INSTALL ENGINE REAR MOUNTING AND BRACKET

(a) Raise the transmission slightly by raising the engine with a jack and a wooden block under the transmission.

(b) Install the engine rear mounting bracket to the support member. Torque the 2 bolts.

Torque: 13 N–m (130 kgf–cm, 9 ft–lbf)

(c) Lower the transmission and rest it on the extension housing.

(d) Install the bracket to the mounting. Torque the 4 bolts.

Torque: 25 N–m (260 kgf–cm, 19 ft–lbf)

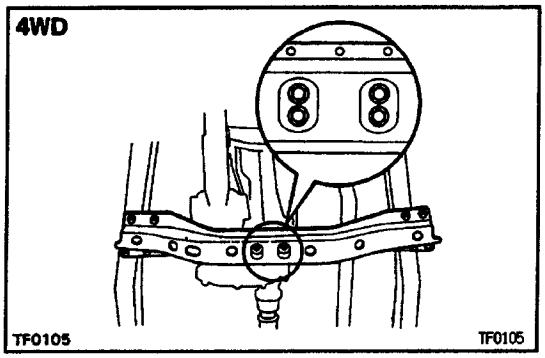

4WD:

INSTALL NO.2 FRAME CROSSMEMBER

(a) Raise the transmission slightly with a jack.

(b) Install the No.2 frame crossmember to the side frame with the 4 bolts. Torque the bolts.

Torque: 95 N–m (970 kgf–cm, 70 ft–lbf)

(c) Lower the transmission and transfer.

(d) Install the 4 mounting bolts to the engine rear mounting. Torque the bolts.

Torque: 13 N–m (130 kgf–cm. 9 ft–lbf)

8. 4WD:

INSTALL BRAKE TUBE HEAT INSULATOR AND NO.1 FRONT FLOOR HEAT INSULATOR

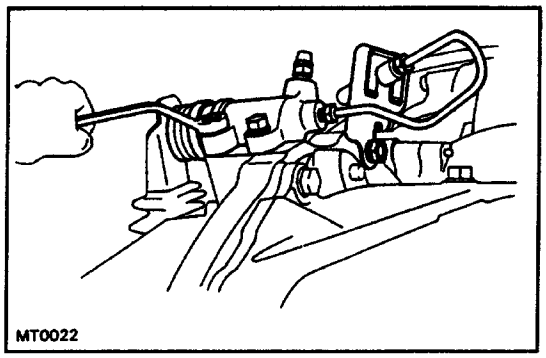

9. M/T:

INSTALL CLUTCH RELEASE CYLINDER WITH BRACKET TO TRANSMISSION

Torque:

Bracket: 39 N–m (400 kgf–cm, 29 ft–lbf)

Release cylinder: 12 N–m (120 kgf–cm, 9 ft–lbf)

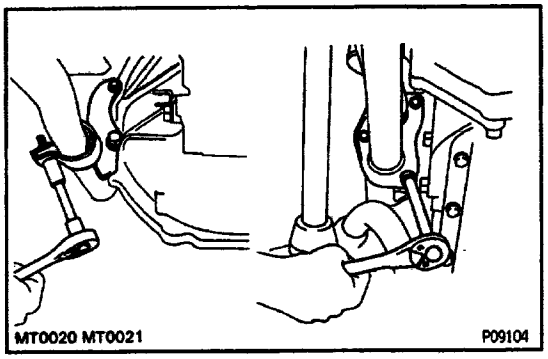

10. INSTALL EXHAUST PIPE

(a) Connect the exhaust pipe to the catalytic converter.
(b) Connect the exhaust pipe to the exhaust manifold.
(c) Install the exhaust pipe clamp.
(d) Connect the oxygen sensor connector.

11. 4WD:
INSTALL FRONT PROPELLER SHAFT
(See front propeller shaft Installation in Propeller Shaft)

12. 4WD:
INSTALL STABILIZER BAR
(See stabilizer bar installation in stabilizer bar in Suspension and Axle)

13. 4WD:
INSTALL TRANSFER UNDER COVER

14. CONNECT SPEEDOMETER CABLE

15. 4WD A/T:
CONNECT TRANSFER SHIFT LINKAGE

(a) Apply MP grease to the cross shaft joint.

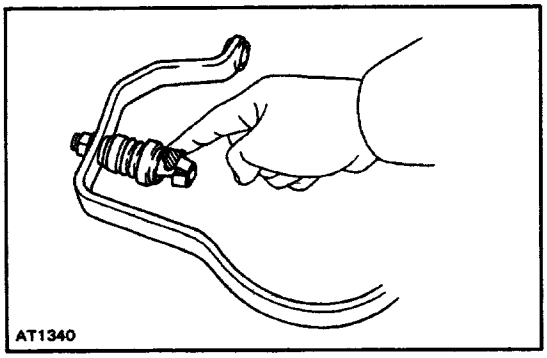

(b) install the cross shaft to the body.

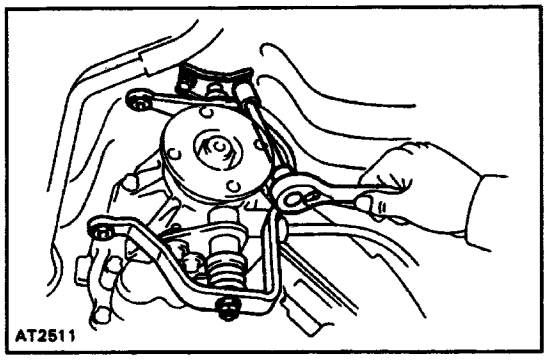

(c) Connect the No.1 and No.2 transfer shift linkage to the cross shaft.

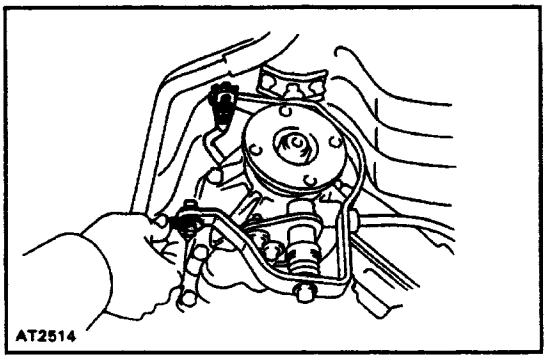

16. 2WD A/T:
CONNECT MANUAL SHIFT LINKAGE TO PNP SWITCH
17. INSTALL PROPELLER SHAFT
(See propeller shaft installation in Propeller Shaft)
18. M/T:
INSTALL SHIFT LEVER
(a) Apply MP grease to the shift lever.
(b) Install the shift lever to the transmission.
19. CONNECT GROUND STRAPS TO ENGINE REAR SIDE AND RH SIDE
20. w/ A/C:
INSTALL COMPRESSOR TO BRACKET
(a) Install the compressor with the 4 bolts.
(b) Install the drive belt and adjust the belt tension.

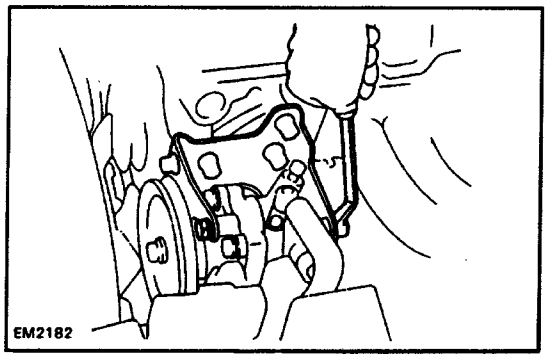

21. CONNECT GROUND STRAP FOR PS PUMP BRACKET
22. w/PS:
INSTALL PS PUMP WITH PS PUMP BRACKET
Install the PS pump with the 4 bolts.
23. CONNECT THESE CABLES:
(a) A/T:
Throttle cable
(b) Cruise control:
Cruise control cable
(c) Accelerator cable
24. CONNECT THESE HOSES:
(a) Charcoal canister hose to canister
(b) w/Cruise control:
Cruise control vacuum hose
(c) Brake booster hose
(d) PS air hoses to gas filter and air pipe
25. CONNECT THESE WIRES AND CONNECTORS:
(a) w/ A/C:
A/C compressor connector
(b) Check connector
(c) M/T:
Starter relay connectors
(d) ECM connectors
(e) Ground strap to engine rear side .
(f) Distributor wire
(g) High–tension cords
(h) Generator wires

(i) Igniter connector

6) Generator connector and wire

(k) Ground strap to LH fender apron

26. INSTALL FAN PULLEY, BELT GUIDE, FLUID COUPLING AND GENERATOR DRIVE BELT

(See stop 9 in timing chain installation in timing chain)

27. w/ A/C:

INSTALL A/C BELT

(See step 2 in maintenance operation In Maintenance)

28. INSTALL PS PUMP AND BELT

(a) Place the PS drive belt onto each pulley.

(b) Stretch the belt tight and tighten the nuts.

(c) Torque the PS pump pulley lock nut.

Torque: 43 N–m (440 kgf–cm, 32 ft–lbf)

(d) Adjust the belt tension.

(See step 2 in maintenance operation in Maintenance)

29. INSTALL RADIATOR

30. INSTALL AIR CLEANER CASE AND INTAKE AIR CONNECTOR

31. FILL WITH ENGINE OIL

(See step 3 in oil and filter replacement in Lubrication System)

32. FILL WITH COOLANT

(See step 3 in coolant check and replacement in Cooling

system)

33. INSTALL ENGINE UNDER COVER

34. INSTALL BATTERY

35. INSTALL HOOD

36. START ENGINE

Warm up the engine and inspect for leaks.

37. PERFORM ENGINE ADJUSTMENT

(See tune–up)

38. ROAD TEST VEHICLE

39. RECHECK COOLANT AND ENGINE OIL LEVEL

CYLINDER HEAD

COMPONENTS FOR REMOVAL AND INSTALLATION

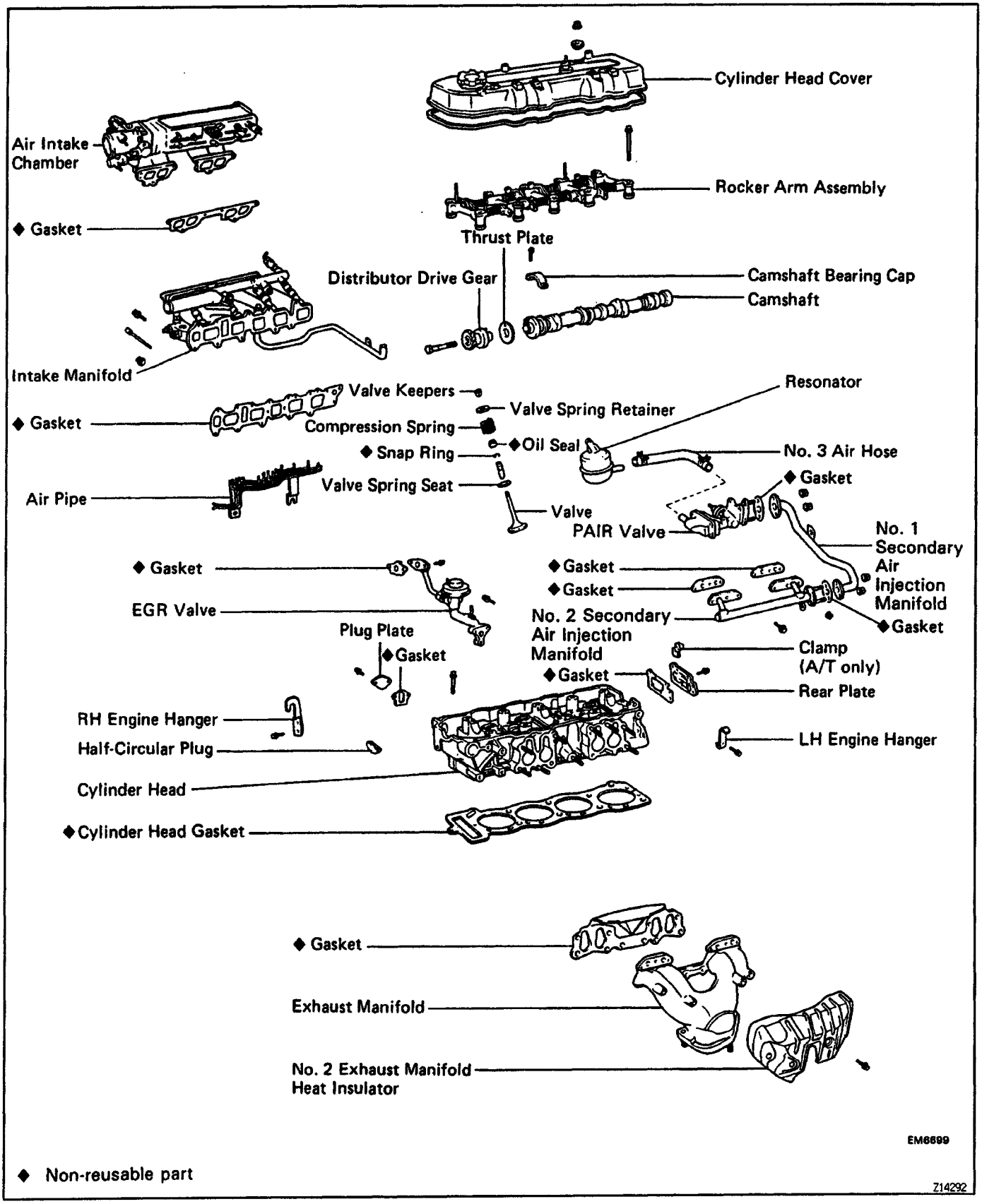

PREPARATION FOR REMOVAL

1. DRAIN COOLANT FROM RADIATOR AND CYLINDER BLOCK

(See step 3 in coolant check and replacement in Cooling System)

2. REMOVE INTAKE AIR CONNECTOR

3. DISCONNECT EXHAUST PIPE FROM EXHAUST MANIFOLD

(a) Remove the exhaust pipe clamp.

(b) Remove the 3 nuts, and disconnect the exhaust pipe.

4. REMOVE OIL DIPSTICK

5. REMOVE DISTRIBUTOR AND SPARK PLUGS

6. REMOVE RADIATOR INLET HOSE

7. DISCONNECT HEATER WATER INLET HOSE FROM HEATER WATER INLET PIPE

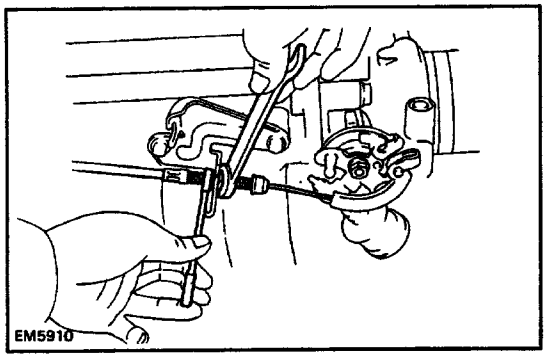

8. DISCONNECT ACCELERATOR CABLE

9. A/T:

DISCONNECT THROTTLE CABLE

Disconnect the throttle cable from the bracket and clamp.

10. DISCONNECT GROUND STRAP FROM ENGINE REAR SIDE

11. DISCONNECT THESE PARTS:

(a) No.1 and No. 2 PCV hoses

(b) Brake booster hose

(c) w/ PS:

Air control valve hoses

(d) w/ A/C:

VSV hoses

(e) EVAP hose

(f) EGR vacuum modulator hose

(g) EGR valve hose

(h) Fuel pressure up hose

(i) PAIR valve hose

(j) Pressure regulator hose

(k) Vacuum hoses from throttle body

(1) No. 2 and No. 3 water bypass hoses from the throttle body

(m) w/ Oil cooler:

Disconnect the No. 1 oil cooler hose from the intake manifold.

w/o Oil cooler:

Disconnect the No. 1 water bypass hose from the intake manifold.

12. REMOVE EGR VACUUM MODULATOR

13. DISCONNECT THESE WIRES:

(a) Cold start injector wire
(b) Throttle position wire
(c) California only:
EGR gas temperature sensor wire

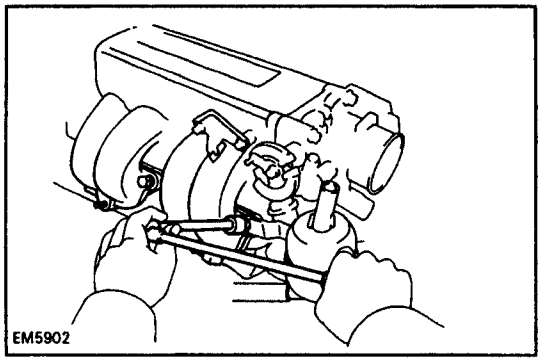

14. REMOVE CHAMBER WITH THROTTLE BODY

(a) Remove the union bolt holding the cold start injector pipe to the chamber.
(b) Remove the bolts, holding the No. 1 EGR pipe to the chamber.
(c) Remove the bolts, holding the manifold stay to the chamber.
(d) Remove the 4 bolts, 2 nuts, bond strap and fuel hose clamp.
(e) Remove the chamber with the throttle body, resonator and gasket.

15. DISCONNECT FUEL RETURN HOSE

16. DISCONNECT THESE WIRES:

(a) Knock sensor wire
(b) Oil pressure sender gauge wire
(c) Starter wire (terminal 50)
(d) Transmission wires
(e) w/ A/C:
Compressor wires
(f) Injector wires
(g) Engine coolant temperature sender gauge wire
(h) A/T:
OD temperature switch wire
(i) Igniter wire
(j) VSV wires
(k) Start injector time switch wire
(1) Engine coolant temperature sensor wire

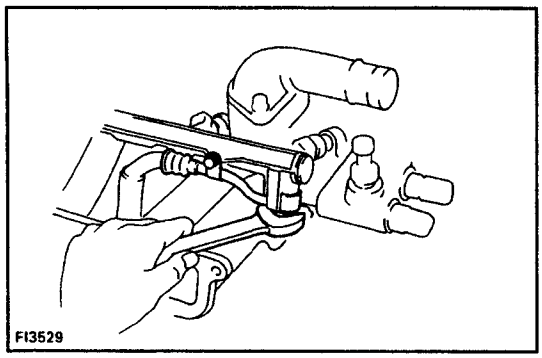

17. DISCONNECT FUEL HOSE FROM DELIVERY PIPE

Remove the bolt, union bolt and 2 gaskets.

18. DISCONNECT BYPASS HOSE FROM INTAKE MANIFOLD

19. w/ PS:

REMOVE PS BELT

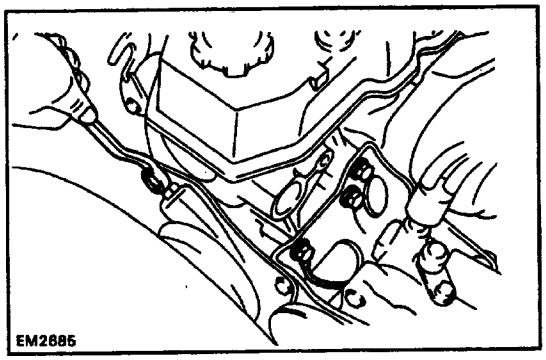

20. w/ PS:

DISCONNECT PS BRACKET FROM CYLINDER HEAD

Remove the 4 bolts, disconnect the ground strap and bracket.

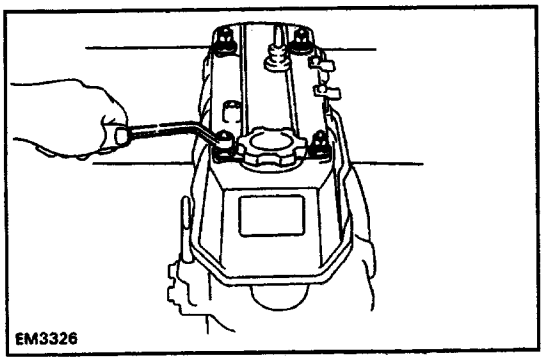

CYLINDER HEAD REMOVAL

(See Components for Removal and Installation)

1. REMOVE HEAD COVER

(a) Remove the ground strap from the body.
(b) Remove the 4 nuts and seals.
(c) Remove the head cover.

NOTICE: Cover the oil return hole in the head with a rag to prevent objects from falling in.

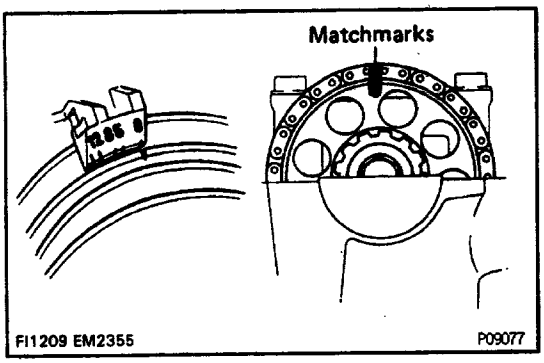

2. REMOVE CAMSHAFT SPROCKET BOLT

(a) Turn the crankshaft until the No. 1 cylinder position is set at TDC compression.
(b) Place matchmarks on the sprocket and chain.
(c) Remove the half–circular plug.

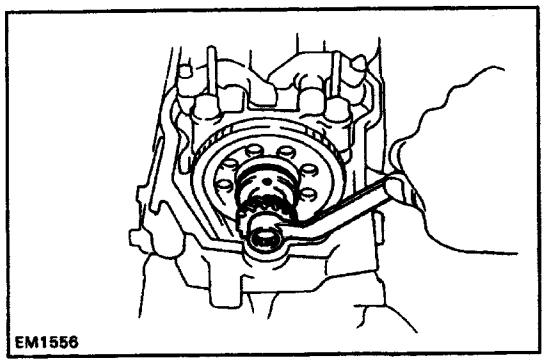

(d) Remove the camshaft sprocket bolt.

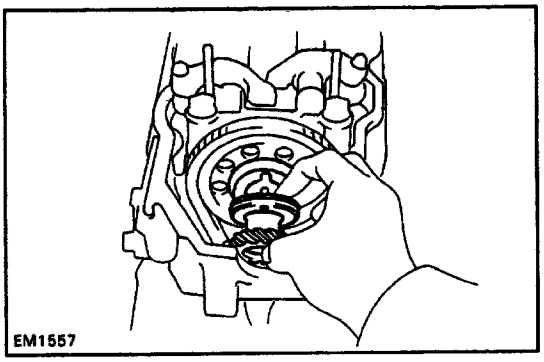

3. REMOVE DISTRIBUTOR DRIVE GEAR AND CAMSHAFT THRUST PLATE

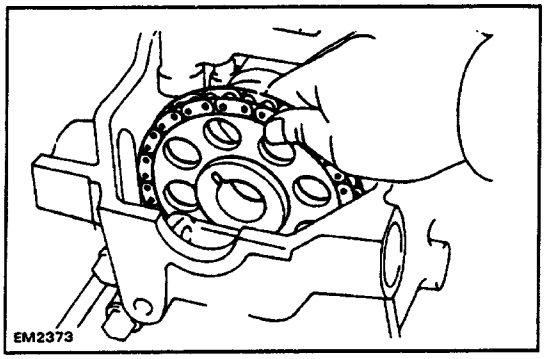

4. REMOVE CAMSHAFT SPROCKET

Remove the camshaft sprocket and chain from the camshaft and leave on the vibration damper.

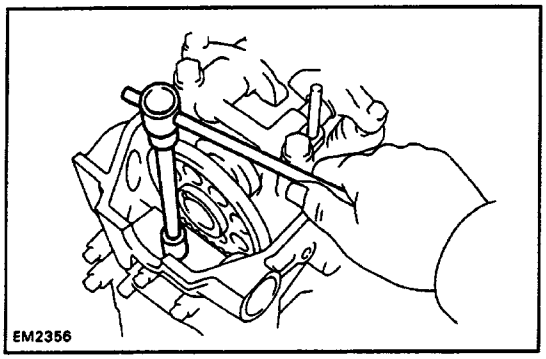

5. REMOVE CHAIN COVER BOLT

Remove the bolt in front of the head before the other head bolts are removed.

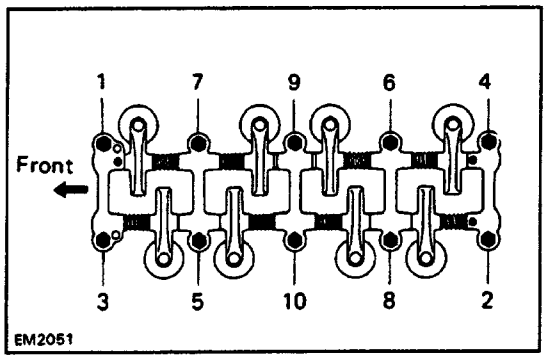

f. REMOVE CYLINDER HEAD BOLTS

Remove the head bolts gradually in 2 or 3 passes and in the numerical order shown.

NOTICE: Head warpage or cracking could result from removing bolts in incorrect order.

7. REMOVE ROCKER ARM ASSEMBLY

1t may be necessary to use a pry bar on the front and rear of the rocker arm assembly to separate it from the head.

8. REMOVE CYLINDER HEAD

Lift the cylinder head from the dowels on the cylinder block and place the head on wooden blocks on a bench.

HINT: If the cylinder head is difficult to lift off, pry with a screwdriver between the head and block saliences.

NOTICE: Be careful not to damage the cylinder head and block surfaces of the cylinder head gasket.

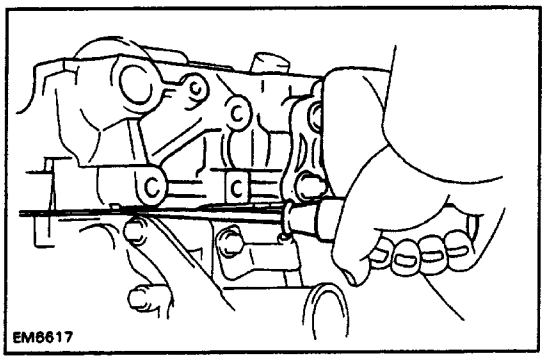

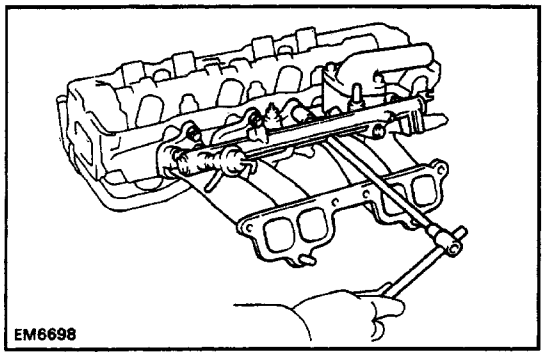

CYLINDER HEAD DISASSEMBLY

(See Components for Removal and Installation)

1. REMOVE INTAKE MANIFOLD WITH DELIVERY PIPE

(a) Remove the bolt and the heater inlet pipe from the cylinder head.

(b) Remove the 8 bolts, 2 nuts and No. 1 air pipe.

(c) Remove the intake manifold together with the delivery pipe, injectors and heater water inlet pipe.

2. REMOVE EGR VALVE

Remove the 2 bolts, nut and EGR valve.

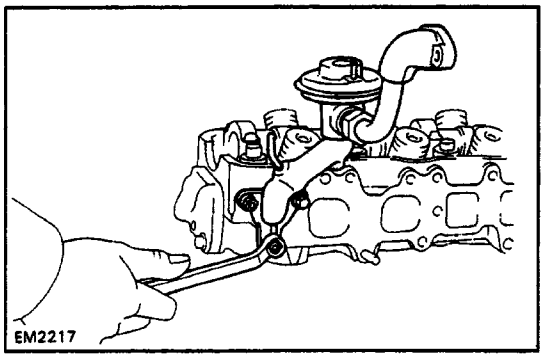

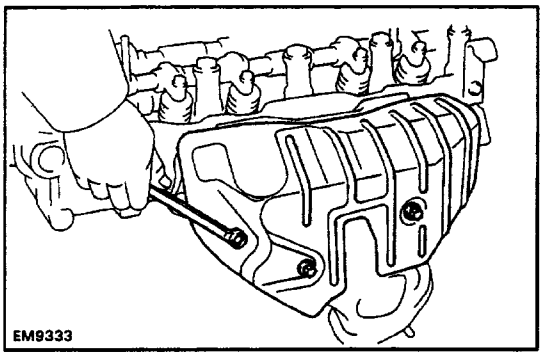

3. REMOVE EXHAUST MANIFOLD WITH NO. 2 SECONDARY AIR INJECTION MANIFOLD

(a) Remove the 3 bolts and No. 2 exhaust manifold heat insulator.

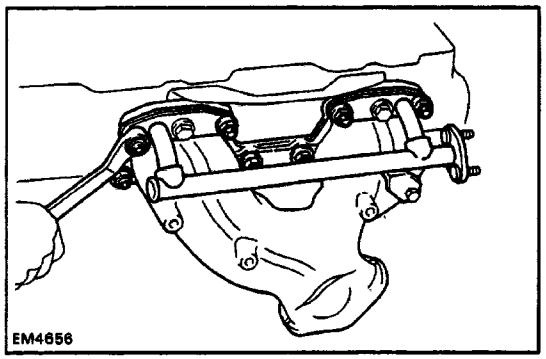

(b) Remove the 8 nuts, exhaust manifold and No. 2 secondary air injection manifold.

4. REMOVE ENGINE HANGERS AND GROUND STRAP

5. REMOVE CYLINDER HEAD REAR COVER

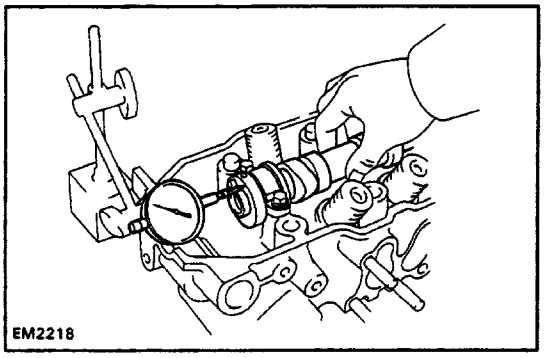

6. MEASURE CAMSHAFT THRUST CLEARANCE

Using a dial gauge, measure the camshaft thrust clearance.

Standard clearance:

0.08 – 0.18 mm (0.0031 – 0.0071 in.)

Maximum clearance:

0.25 mm (0.0098 in.)

If clearance is greater than maximum, replace the
. head.

7. REMOVE CAMSHAFT BEARING CAPS AND CAMSHAFT

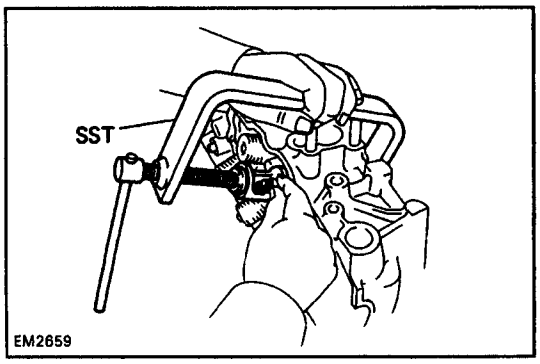

8. REMOVE VALVES

(a) Using SST, compress the valve retainer until the 2 keepers can be removed.
SST 09202–43013

(b) Remove the valve keepers, retainer, spring and valve.

(c) Pry out .the oil seal.

(d) Using a small screwdriver or magnet, remove the valve spring seat.

HINT: Keep the valves arranged so they can be installed in the same order as removed.

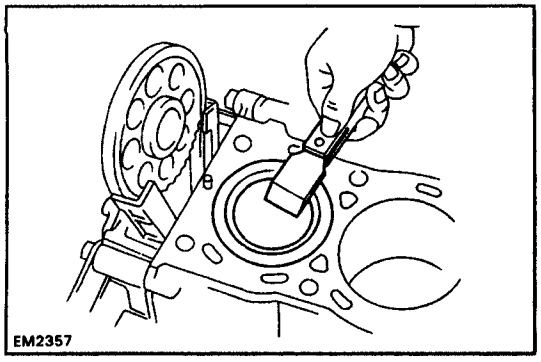

INSPECTION, CLEANING AND REPAIR OF CYLINDER HEAD COMPONENTS

1. CLEAN TOP OF PISTONS AND TOP OF CYLINDER BLOCK

(a) Turn the crankshaft and bring each piston to top dead center. Using a gasket scraper, remove all the carbon from the piston tops.

(b) Using a gasket scraper, remove all gasket material from the top of the block. Blow carbon and oil from the bolt holes.

CAUTION: Protect your eyes when using high pressure air.

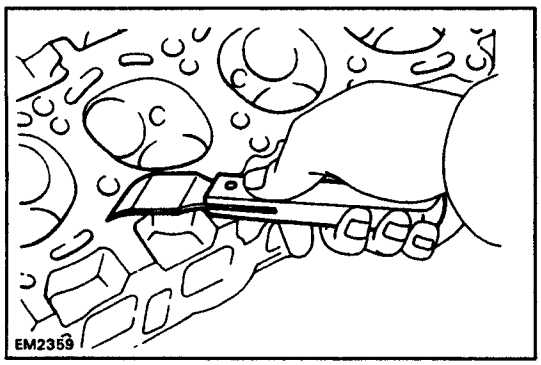

2. REMOVE GASKET MATERIAL

Using a gasket scraper, remove all gasket material from the head and manifold surfaces.

NOTICE: Be careful not to scratch the surfaces.

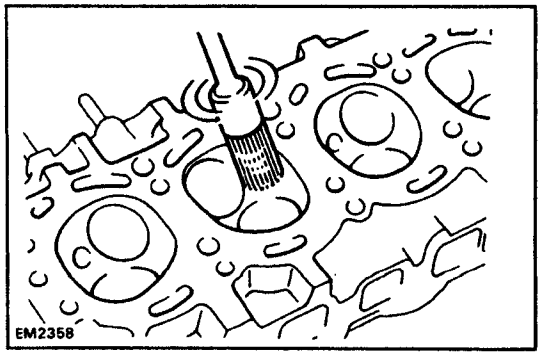

3. CLEAN COMBUSTION CHAMBERS

Using a wire brush, remove all the carbon from the combustion chambers.

NOTICE: Be careful not to scratch the head gasket contact surface.

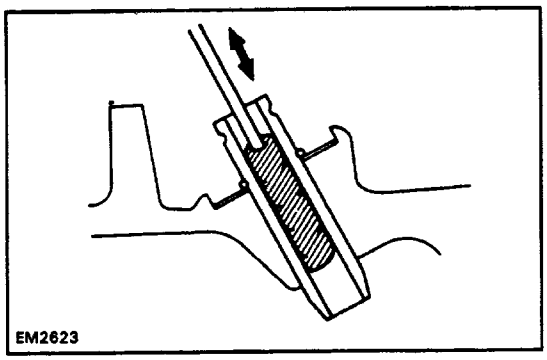

4. CLEAN VALVE GUIDE BUSHINGS

Using a valve guide brush and solvent, clean all the valve guide bushings.

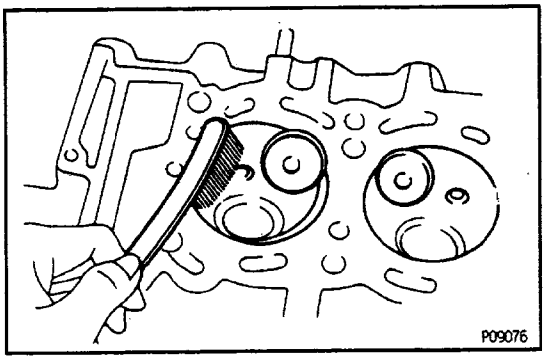

5. CLEAN CYLINDER HEAD

Using a soft brush and solvent, clean the head.

NOTICE: Do not clean the head in a hot tank as this will seriously damage it.

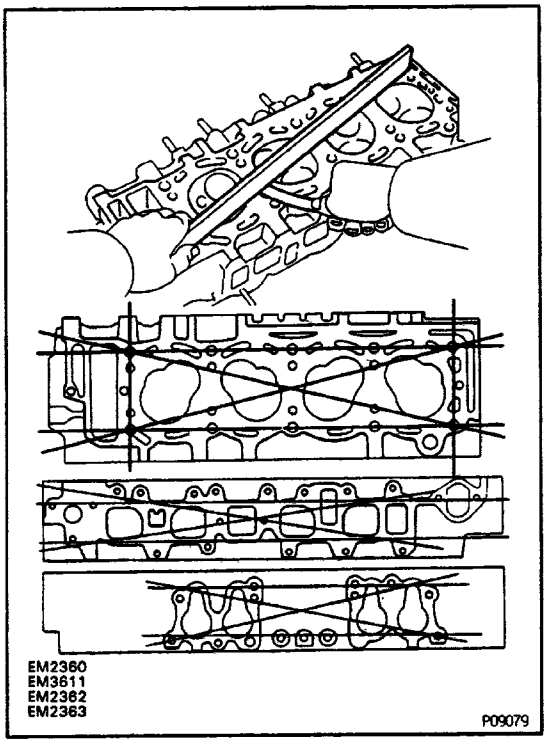

6. INSPECT CYLINDER HEAD FOR FLATNESS

Using a precision straight edge and thickness gauge, measure the surface contacting the cylinder block and manifold for warpage.

Maximum head surface warpage:

0.15 mm (0.0059 in.)

Maximum manifold surface warpage:

0.20 mm (0.0079 in.)

If warpage is greater than maximum, replace the cylinder head.

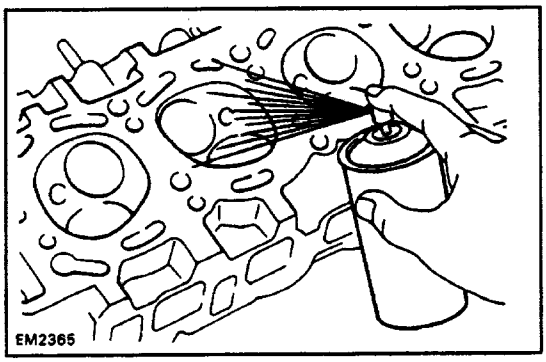

7. INSPECT CYLINDER HEAD FOR CRACKS

Using a dye penetrant, check the combustion chambers, intake and exhaust ports, head surface and the top of the head for cracks.

If a crack is found, replace the head.

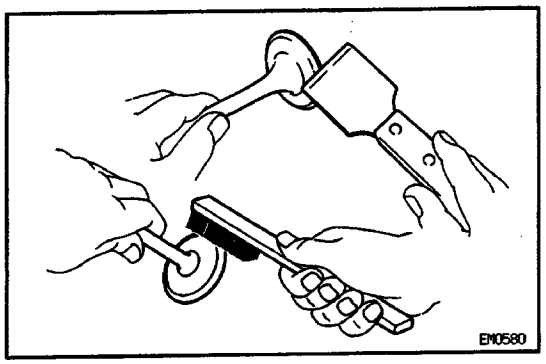

8. CLEAN VALVES

(a) Using a gasket scraper, chip off any carbon from the valve head.

(b) Using a wire brush, thoroughly clean the valve.

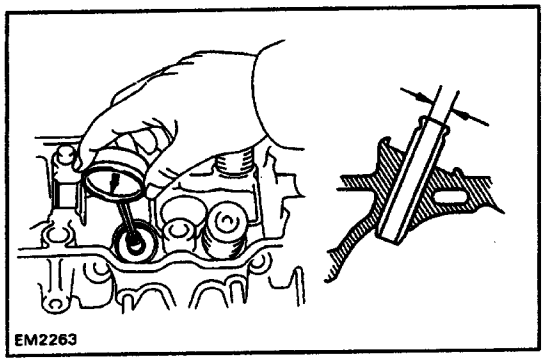

9. INSPECT VALVE STEMS AND GUIDE BUSHINGS

(a) Using a caliper gauge, measure the inside diameter of the valve guide bushing.

Standard inside diameter:

8.01 – 8.03 mm (0.3154 – 0.3161 in.)

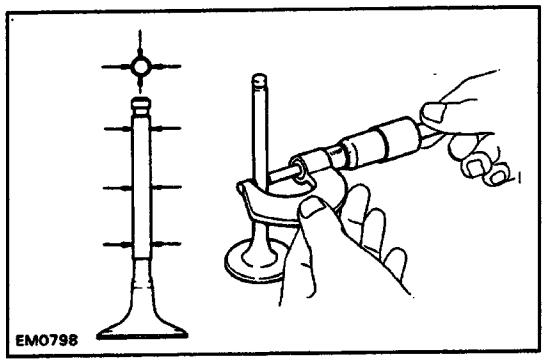

(b) Using a micrometer, measure the diameter of the valve stern.

Standard valve stem diameter:

Intake

7.970 – 7.985 mm (0.3138 – 0.3144 in.)

Exhaust

7.965 – 7.980 mm (0.3136 – 0.3142 in.)

(c) Subtract the valve stem diameter measurement from the valve guide bushing diameter measurement.

Standard oil clearance:

Intake

0.025 – 0.060 mm (0.0010 – 0.0024 in.)

Exhaust

0.030 – 0.650 mm (0.0012 – 0.0026 in.)

Maximum stem oil clearance:

Intake

0.08 mm (0.0031 in.)

Exhaust

0.10 mm (0.0039 in.)

If the clearance is greater than maximum, replace the valve and guide bushing.

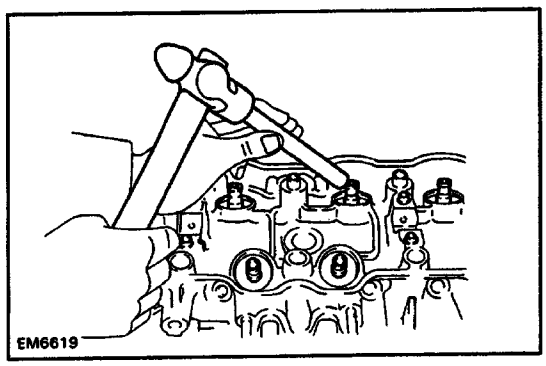

10. IF NECESSARY, REPLACE VALVE GUIDE BUSHINGS

(a) Using a brass bar and hammer, break the valve guide bushing.

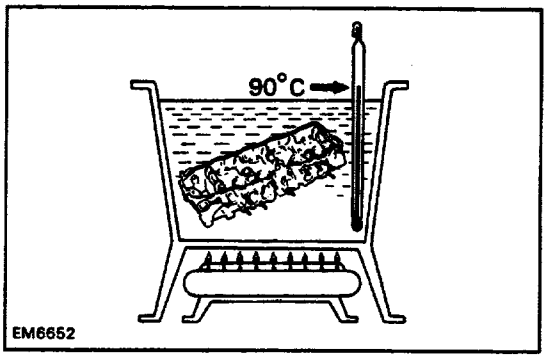

(b) Gradually heat the cylinder head to approx. 90˚C (194˚ F).

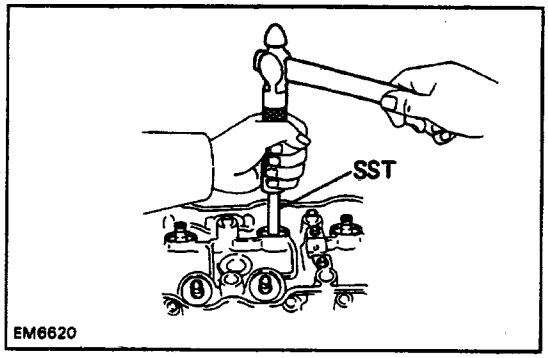

(c) Using SST and a hammer, drive out valve guide bushing.
SST 09201– 60011

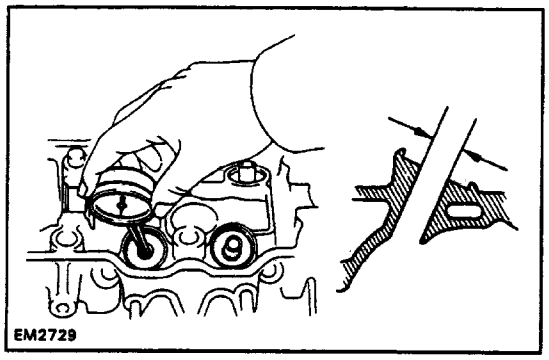

(d) Using a caliper gauge, measure the valve guide bushing bore of the cylinder head.

(e) Select a new valve guide bushing.
If the valve guide bushing bore of the cylinder head is more than 13.018 mm (0.512 in.), machine the bore to the following dimension.
Rebored valve guide bushing bore dimension (cold): 13.050 – 13.068 mm (0.5138 – 0.5145 in.)

Bore intake and exhaust

Bushing bore mm (in.)	Bushing size
13.000 – 13.018 (0.5118 – 0.5125)	Use STD
Over 13.018 (0.5125)	Use O/S 0.05

V01770

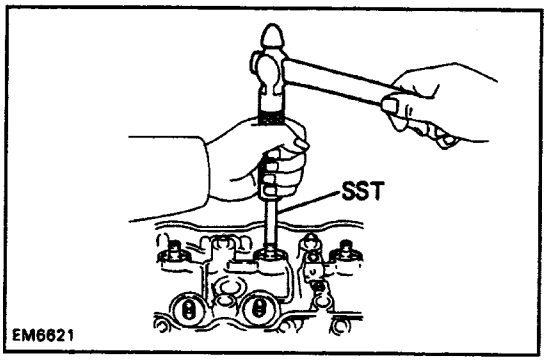

(f) Gradually heat the cylinder head to approx. 90˚C (194˚ F).

(g) Using SST and a hammer, drive in a new valve guide bushing unit the snap ring makes contact with the cylinder head.
SST 09201– 60011

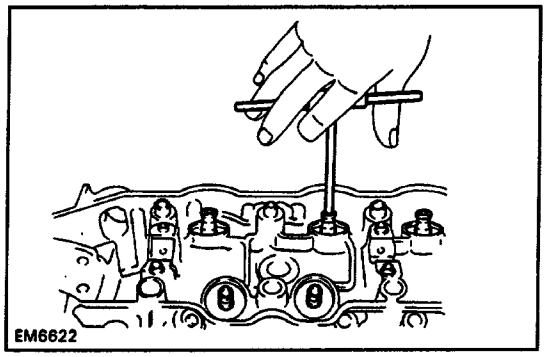

(h) Using a sharp 8 mm (0.31 mm) reamer, ream the valve guide bushing to obtain standard specified clearance
(See step 9) between the valve guide bushing and new valve.

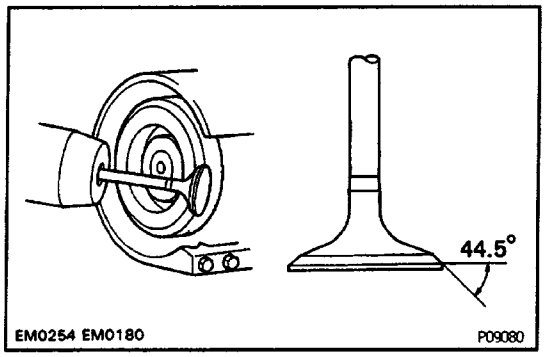

11. INSPECT AND GRIND VALVES

(a) Grind the valve only enough to remove pits and carbon.

(b) Check that valve is ground to the correct valve face angle.

Valve face angle:
44..5°

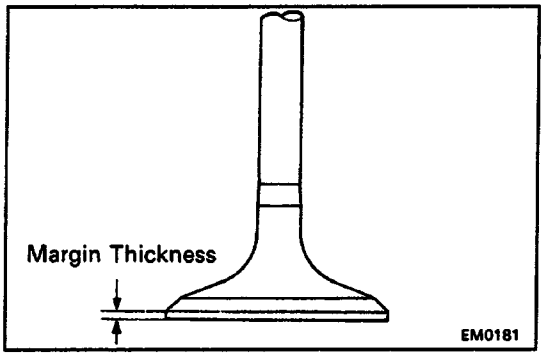

(c) Check the valve head margin thickness.

Standard margin thickness:
1.0 mm (0.039 in.)
Minimum margin thickness:
0.6 mm (0.024 in.)

If the valve head margin thickness is less than minimum, replace the valve.

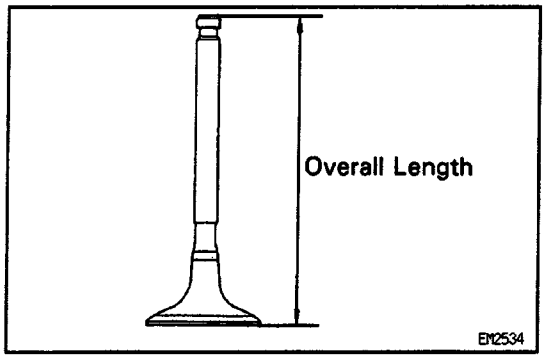

(d) Check the valve overall length.

Standard overall length:
Intake
113.5 mm (4.468 in.)
Exhaust
112.4 mm (4.425 in.)
Minimum overall length:
Intake
113.0 mm (4.449 in.)
Exhaust
111.9 mm (4.406 in.)

If the valve overall length is less than minimum, replace the valve.

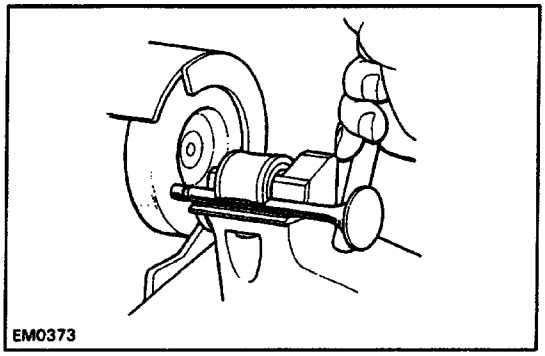

(e) Check the surface of the valve stem tip for wear. If the valve stem tip is worn, regrind it with grinder or replace the valve if necessary.

NOTICE: Do not grind off more than minimum overall length.

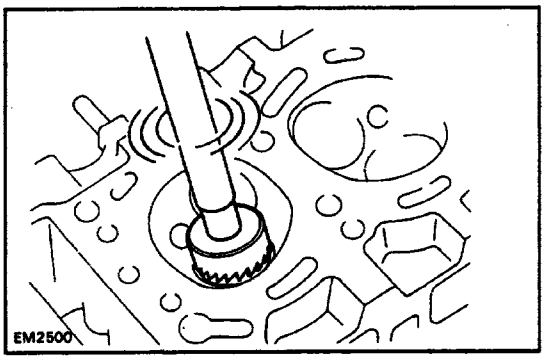

12. INSPECT AND CLEAN VALVE SEATS

(a) Using a 45˚ carbide cutter, resurface the valve seats. Remove only enough metal to clean the seats.

(b) Check the valve seating position.

Apply a light coat of prussian blue (or white lead) to the valve face. Install the valve. Lightly press the valve against the seat. Do not rotate the valve.

(c) Check the valve face and seat for the following:

- If blue appears 360˚ around the face, the valve is concentric. If not, replace the valve.
- If blue appears 360˚ around the valve seat, the guide and seat are concentric. If not, resurface the seat.
- Check that the seat contact is on the middle of the valve face with the following width:

  1.2 – 1.6 mm (0.O47 – 0.063 In.)

  If not, correct the valve seat as follows:

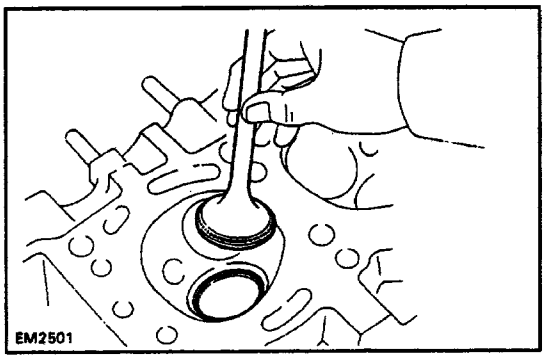

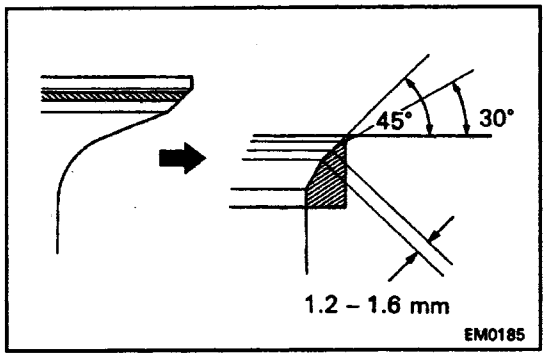

- If seating is too high on the valve face, use 30˚ and 45˚ cutters to correct the seat.

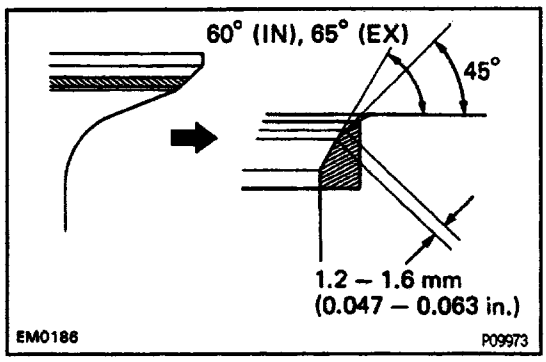

- If seating is too low on the valve face, use60˚ (IN) or 65˚ (EX) and 45˚ cutters to correct the seat.

(d) Hand–lap the valve and valve seat with abrasive compound.

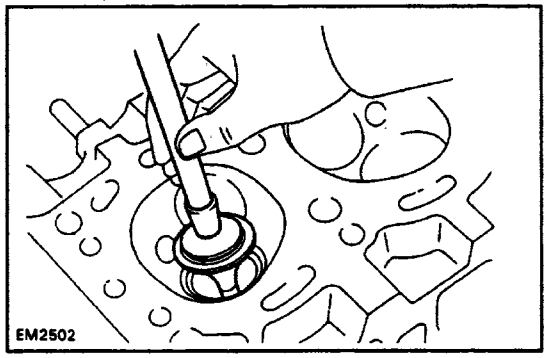

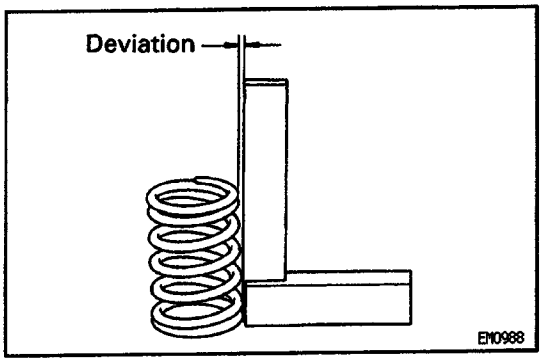

13. INSPECT VALVE SPRINGS

(a) Using a steel square, measure the deviation of the valve spring.

Maximum deviation:

1.6 mm (0.063 in.)

If deviation is greater than maximum, replace the valve spring.

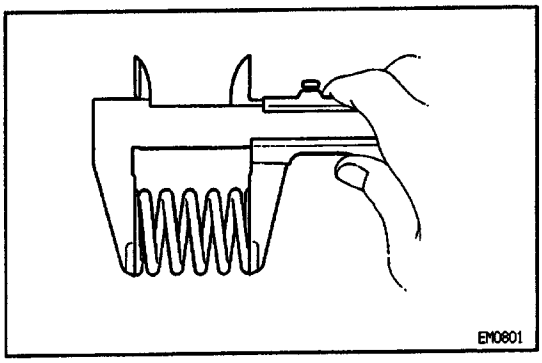

(b) Using vernier calipers, measure the free length of the valve spring.

Free length:

48.5 mm (1.909 in.)

If the free length is not within specification, replace the valve spring.

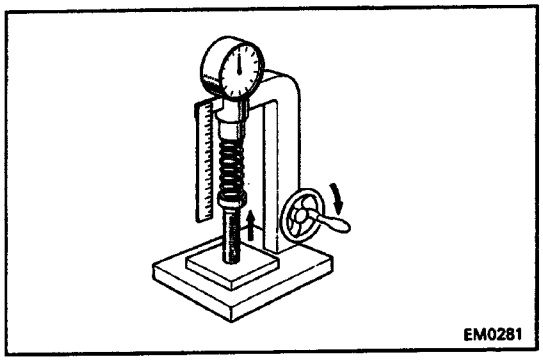

(c) Using a spring tester, check the tension of each spring at the specified installed height.

Installed height:

40.5 mm (1.594 in.)

Standard installed tension:

294 N (30.0 kgf,66.1 lbf)

Minimum installed tension:

279 N (28.5 kgf, 62.8 lbf)

If the installed tension is less than minimum, replace the spring.

14. INSPECT CAMSHAFT AND BEARING CAPS

(a) Place the cam shaft on V– blocks and, using a dial indicator, measure the circle runout at the center journal.

Maximum circle runout:

0.2 mm (0.008 in.)

If the circle runout is greater than maximum, replace the camshaft.

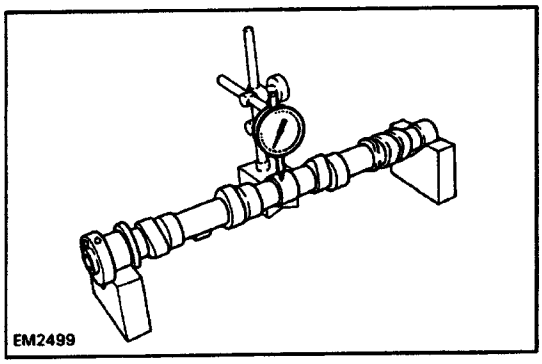

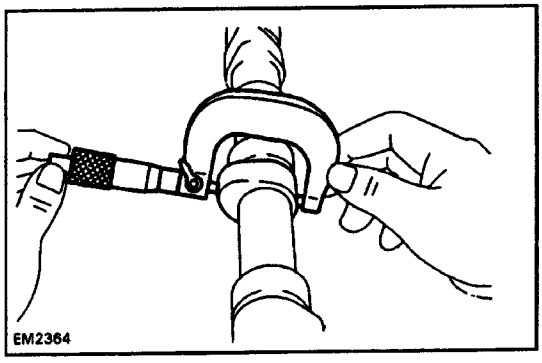

(b) Using a micrometer, measure the cam lobe height.

Standard cam lobe height:

Intake

42.63 – 42.72 mm (1.6783 – 1.6819 in.)

Exhaust

42.69 – 42.78 mm (1.6807 – 1.6842 in.)

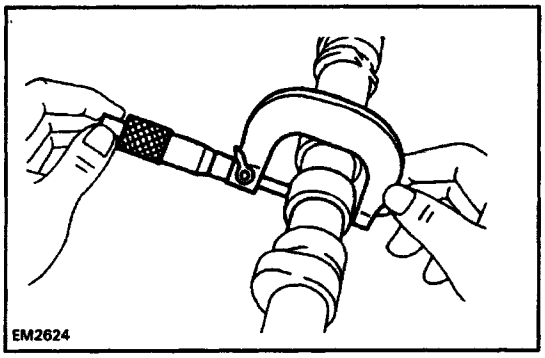

Maximum cam lobe height:

Intake

42.25 mm (1.6634 in.)

Exhaust

42.30 mm (1.6654 in.)

If the lobe height is less than, minimum, replace the camshaft.

(c) Using a micrometer, measure the journal diameter.

Standard diameter:

32.98 – 33.00 mm (1.2984 – 1.2992 in.)

If the journal diameter is less than specified, replace the camshaft.

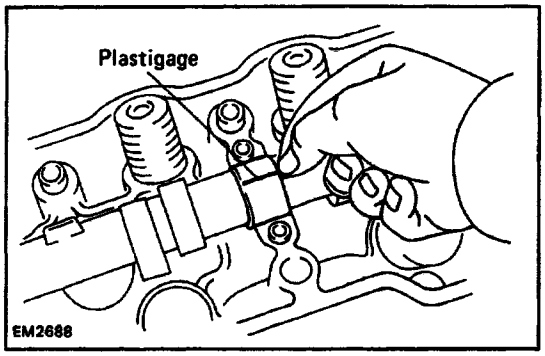

15. INSPECT CAMSHAFT OIL CLEARANCE

(a) Clean the bearing caps and camshaft journal.

(b) Place the camshaft in the cylinder head.

(c) Lay a strip of Plastigage across each journal.

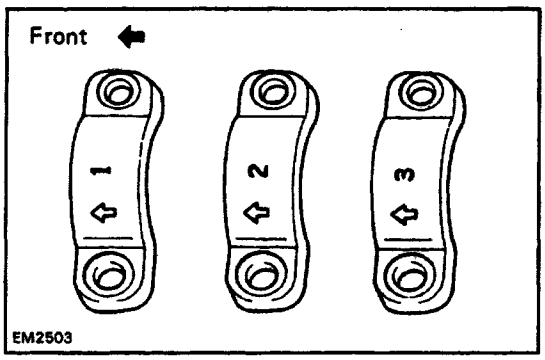

(d) Install the correct numbered bearing cap on each journal with the arrows pointing toward the front.

Torque each bolt.

Torque: 20 N–m (200 kgf–cm. 14 ft–!bf)

HINT: Do not turn the camshaft while the Plastigage is in place.

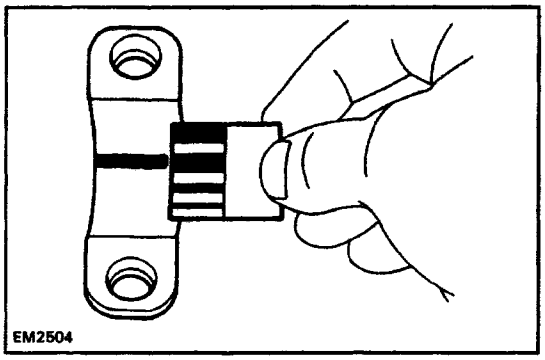

(e) Remove the caps and measure the Plastigage at its widest point.

Standard clearance:

0.01 – 0.05 mm (0.0004 – 0.0020 in.)

Maximum clearance:

0.1 mm (0.004 In.)

If clearance is greater than maximum, replace the cylinder head and/or camshaft.

(f) Clean out the pieces of Plastigage from the bearing and journal.

16. INSPECT ROCKER ARMS

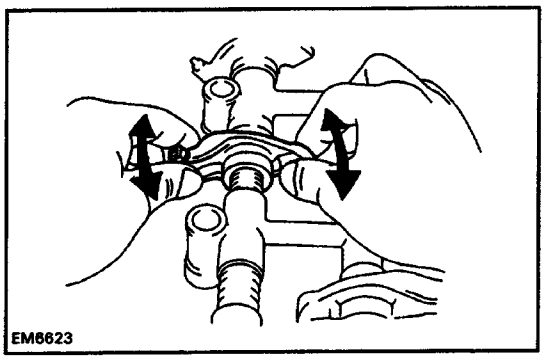

Check the clearance between the rocker arms and shaft by moving the rocker arms as shown. Little or no movement should be felt.

If movement is felt, disassemble the rocker arm assembly and measure the oil clearance as follows:

(a) Disassemble rocker arm assembly.

Remove the 3 screws.

- Slide the rocker stands, spring and rocker arms off the shafts.

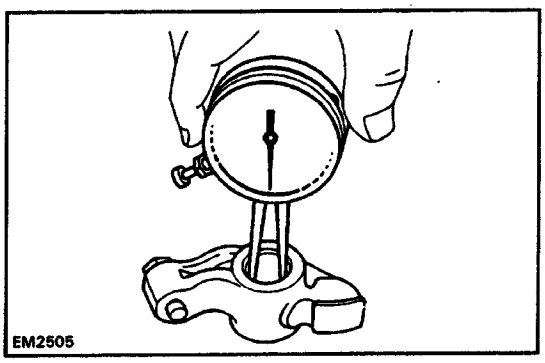

(b) Using a dial indicator or telescoping gauge, measure the inside diameter of the rocker arm.

Standard inside diameter:
16.000 – 16.018 mm (0.6299 – 0.6306 in.)

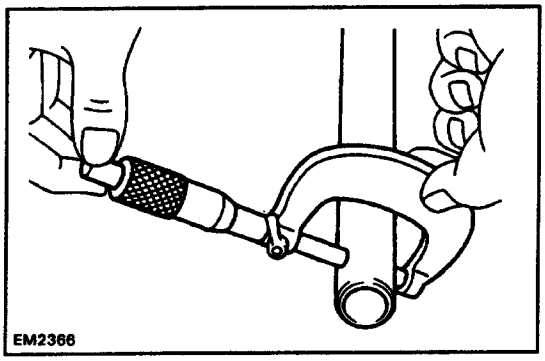

(c) Using a micrometer, measure the outside diameter of the shaft.

Standard diameter:
15.97 –15.99 mm (0.6287 – 0.6295 in.)

(d) Subtract the shaft diameter measurement from the rocker arm diameter measurement.

Standard oil clearance:
0.01 – 0.05 mm (0.0004 – 0.0020 in.)
Maximum oil clearance:
0.08 mm (0.0031 in.)

If the oil clearance is grater than maximum, replace the rocker arm and/or shaft.

(e) Assemble the rocker arm assembly as shown, and install the 3 screws.

HINT: All rocker arms are the same but ail rocker stands are different and must be assembled in the correct order.

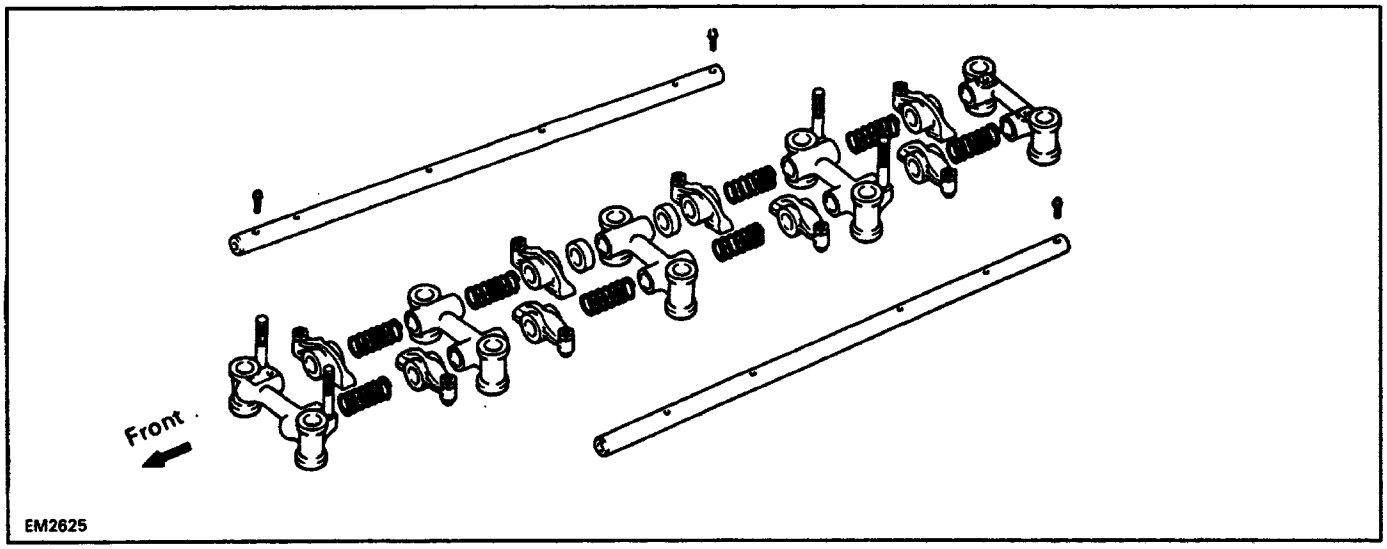

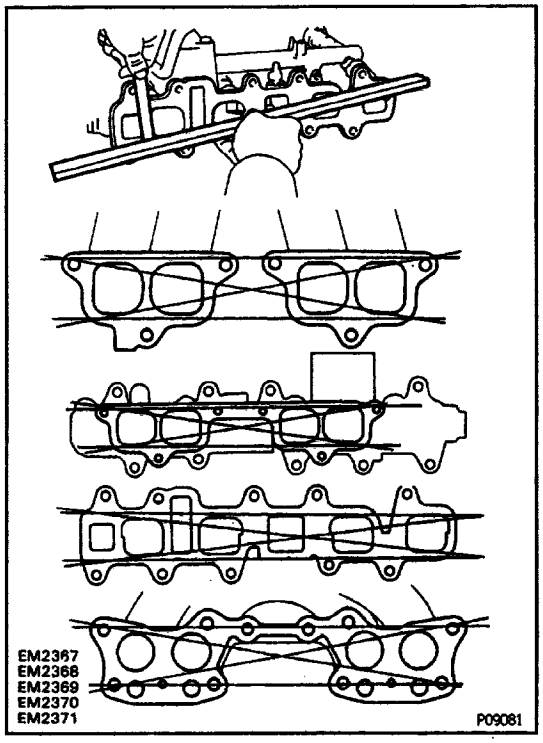

17. INSPECT INTAKE, EXHAUST MANIFOLDS AND AIR INTAKE CHAMBER

Using a precision straight edge and thickness gauge, check the surface contacting the cylinder head or intake manifold for warpage.

Maximum intake warpage:
0.2 mm (0.008 in.)
Maximum exhaust warpage:
0.7 mm (0.28 in.)
Maximum air intake chamber warpage:
0.2 mm (0.008 in.)

If warpage is greater than maximum, replace the manifold and/or air intake chamber.

CYLINDER HEAD ASSEMBLY

(See Components for Removal and Installation)

HINT:

- Thoroughly clean all parts to be assembled.
- Before installing the parts, apply new engine oil to all sliding and rotating surfaces.
- Replace all gaskets and oil seals with new parts.

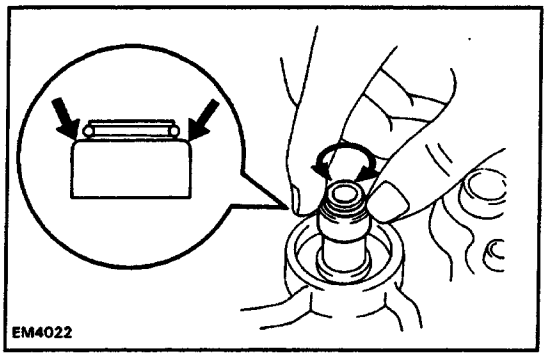

1. INSTALL VALVES

(a) Install a new oil seal on the valve guide bushing.
HINT: Pushing down at the place shown in the illustration.

(b) Rotate the oil seal to check that it is firmly installed.

(c) Lubricate and insert valve in the valve guide bushing. Check that valves are installed in the correct order.

(d) Instal! spring seat, spring and spring retainer on the cylinder head.

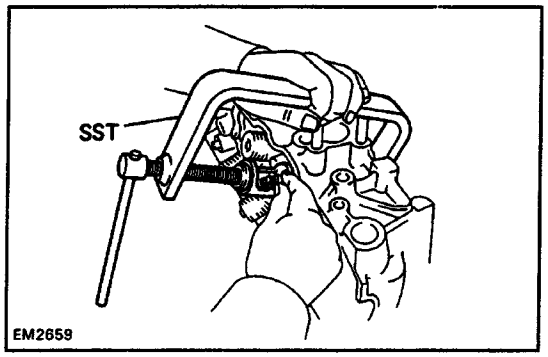

(e) Using SST, compress valve retainer and place 2 keepers around the valve stern.
SST 09202–43 013

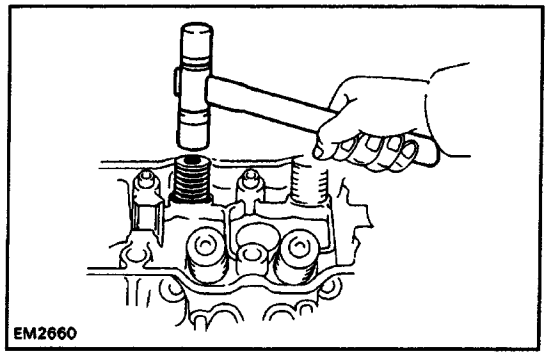

(f) Tap the stem lightly to assure proper fit.

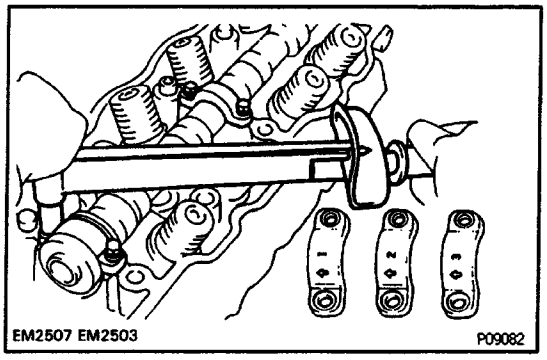

2. INSTALL CAMSHAFT

(a) Place the camshaft in the cylinder head and install the bearing caps in numbered order from the front with arrows pointed toward the front.

(b) Install and torque the cap bolts.
Torque: 20 N–m (200 kgf–cm, 14 ft–lbf)

(c) Turn the camshaft to position the dowel at the top.

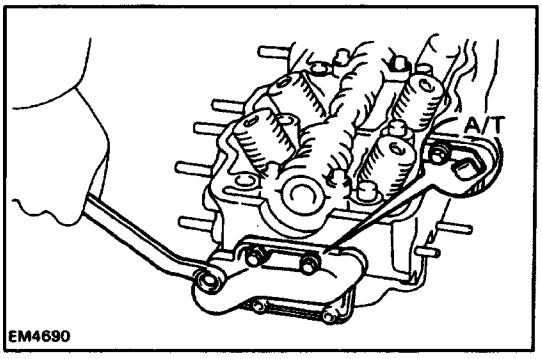

3. INSTALL CYLINDER HEAD REAR COVER
Install a new gasket, cylinder head rear cover and throttle cable clamp (for A/T) with the 4 bolts.

4. INSTALL LH ENGINE HANGER AND GROUND STRAP

5. INSTALL RH ENGINE HANGER

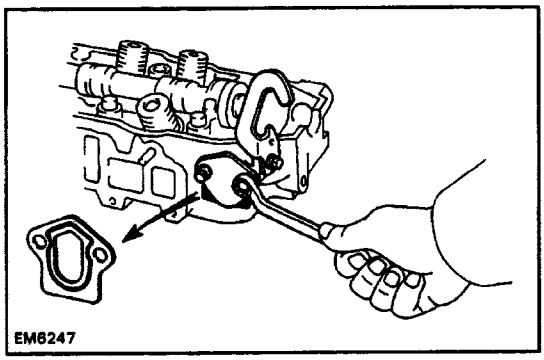

6. INSTALL PLUG PATE

Install a new gasket and plug plate with the 2 bolts.

HINT: Attach the flat side of the gasket to the cylinder head.

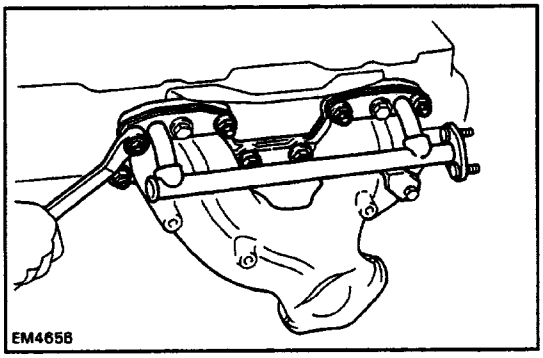

7. INSTALL EXHAUST MANIFOLD

(a) Position a new gasket on the cylinder head.

(b) Install the exhaust manifold with the 8 nuts. Torque the nuts.

Torque: 44 N–m (450 kgf–cm, 33 ft–lbf)

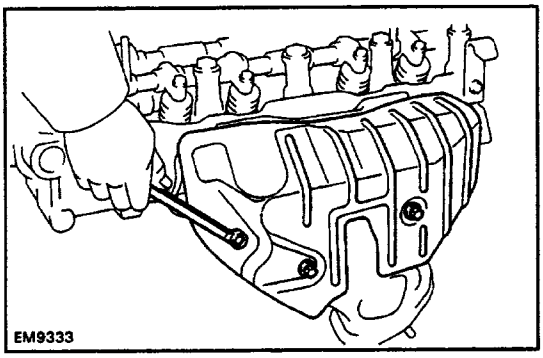

(c) Install the No. 2 exhaust manifold heat insulator with the 3 bolts.

Torque: 19 N–m (195 kgf–cm, 14 ft–lbf)

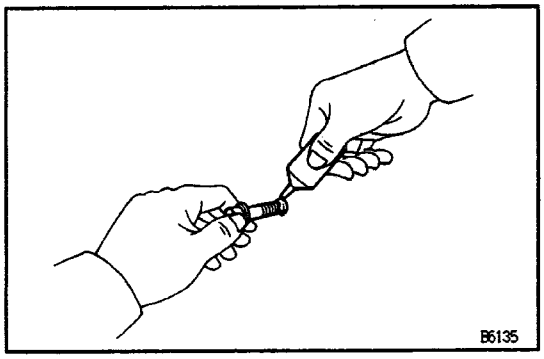

8. INSTALL EGR VALVE

(a) Clean the set bolt (closest to the front) threads and cylinder head bolt holes of any sealer, oil or foreign particles.

Remove any oil with kerosene or gasoline.

(b) Apply sealant to 2 or 3 threads of the bolt end.

Sealant:

Part No. 08833–00070. THREE BOND 1324 or equivalent

- This adhesive will not harden while exposed to air. It will act as a sealer or binding agent only when applied to threads, etc. and air is cut off.

(c) Install the EGR valve with the 2 bolts and nut.

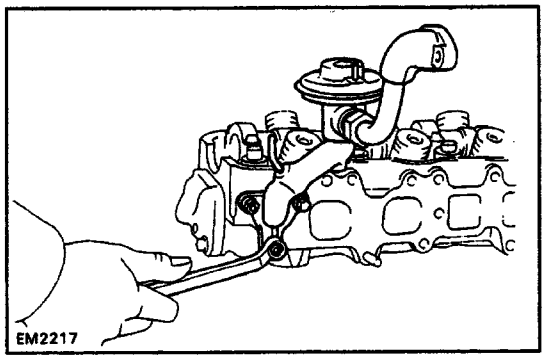

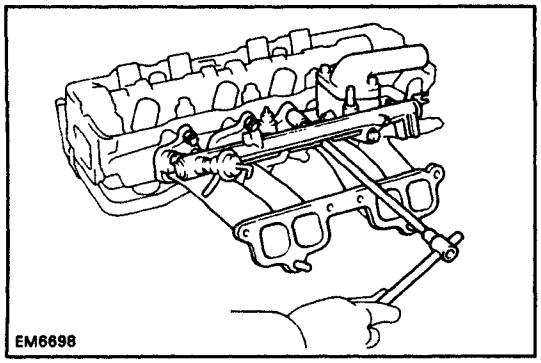

9. INSTALL INTAKE MANIFOLD

(a) Position a new gasket on the cylinder head.

(b) Install the intake manifold with the delivery pipe and injectors and No. 1 air pipe.

(c) Install the 8 bolts, and 2 nuts. Torque the bolts and nuts.

Torque: 19 N–m (195 kgf–cm, 14 ft–lbf)

(d) Install the heater inlet pipe to the cylinder head with the bolt.

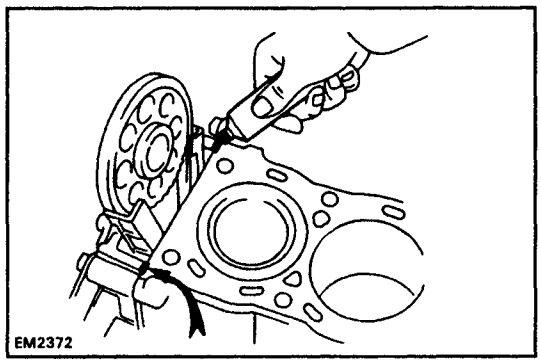

CYLINDER HEAD INSTALLATION

(See Components for Removal and Installation)

1. APPLY SEAL PACKING TO CYLINDER BLOCK

(a) Apply seal packing to 2 locations as shown.

Seal packing:

Part No. 08826–00080 or equivalent

(b) Place a new head gasket over dowels on the cylinder block.

2. INSTALL CYLINDER HEAD

(a) If the sprocket was removed, align the alignment marks placed on the sprocket and chain during removal.

(b) Position the cylinder head over dowels on the block.

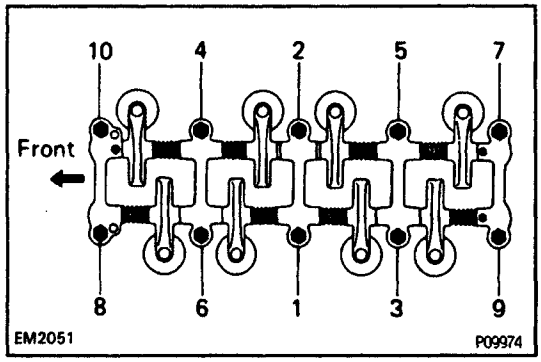

3. INSTALL ROCKER ARM ASSEMBLY

(a) Place the rocker arm assembly over the dowels on the cylinder head.

(b) Install and tighten the head bolts gradually in 3 passes in the sequence shown. Torque the bolts on the final
pass.

Torque: 78 N–m (800 kgf–cm, 58 ft–lbf)

4. INSTALL CHAIN COVER BOLT

Torque the bolt.

Torque: 13 N–m (130 kgf–cm, 9 ft–lbf)

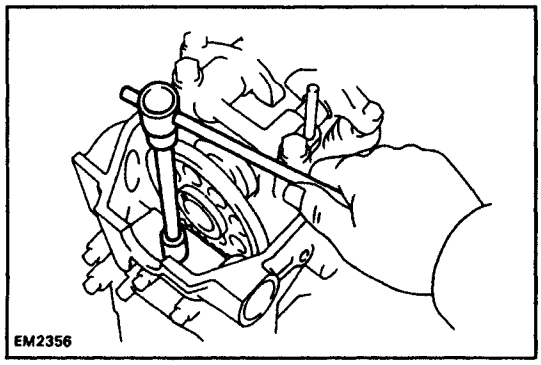

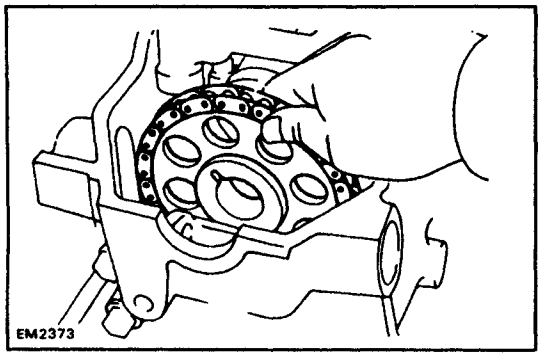

(a) While holding up on the sprocket and chain, turn the crankshaft until the No. 1 and No. 4 cylinders are at top dead center.

(b) Place the chain sprocket over the camshaft dowel.

HINT: If the chain does not seem long enough, turn the crankshaft back and forth while pulling up on the chain and sprocket.

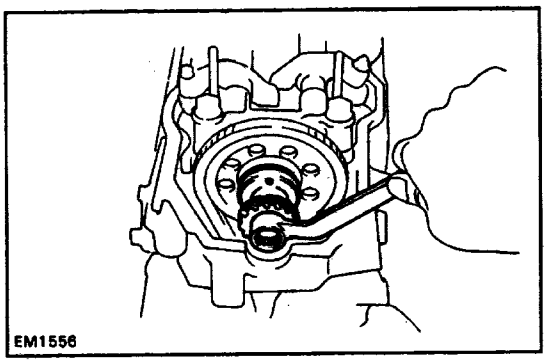

5. INSTALL DISTRIBUTOR DRIVE GEAR AND CAMSHAFT THRUST PLATE

Place the distributor drive gear and camshaft thrust plate over the chain sprocket. Torque the bolt.

Torque: 78 N–m (800 kgf–cm, 58 ft–lbf)

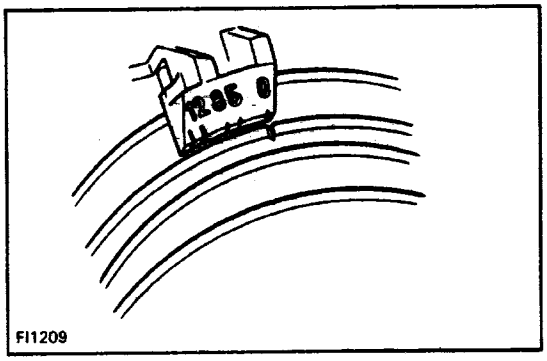

6. ADJUST VALVE CLEARANCE

(a) Set the No. 1 cylinder to TDC/compress ion.

- Turn the crankshaft with a wrench to align the timing, marks at TDC. Set the groove on the pulley at the ”0” mark position of the chain cover.
- Check that the rocker arms on the No. 1 cylinder are loose and the rocker arms on No. 4 cylinder are tight. If not, turn the crankshaft 1 complete revolution and align the marks as above.

(b) Adjust the clearance of half of the valves.

Adjust only the valves indicated by arrows as shown.

Valve clearance (Cold):

Intake

0.20 mm (0.00s in.)

Exhaust

0.30 mm (0.012 in.)

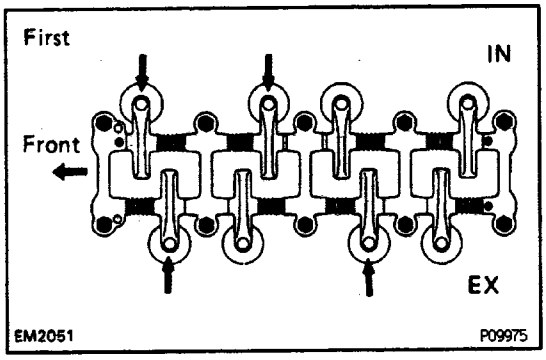

HINT: After installing the cylinder head, warm up the engine and adjust the valve clearance.

Use a thickness gauge to measure between the valve stem and rocker arm. Loosen the lock nut and turn the adjusting screw to set the proper clearance. Hold the adjusting screw in position and tighten the lock nut.

Torque: 25 N–m (250 kgf–cm, 18 ft–lbf)

- Recheck the clearance. The thickness gauge should move with a very slight drag.

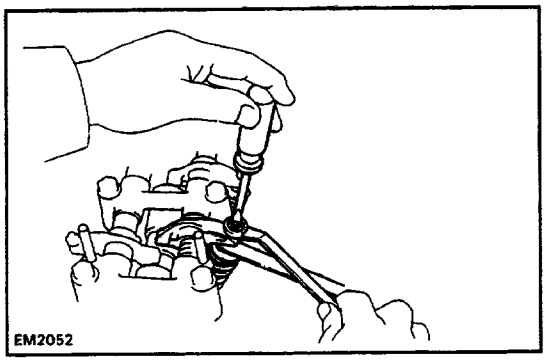

(c) Turn the crankshaft one revolution and adjust the other valves. –

(d) Set the No. 1 cylinder to TDC/compression.

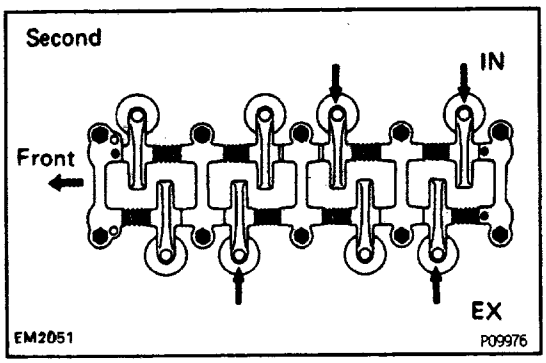

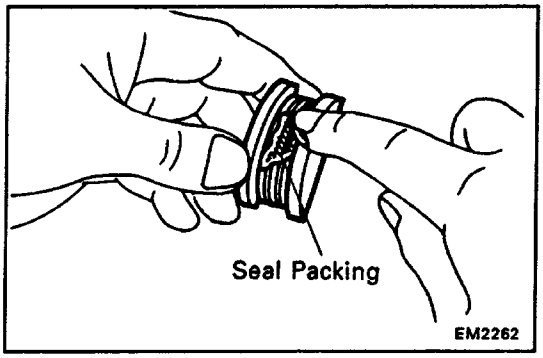

7. INSTALL HALF–CIRCULAR PLUGS

(a) Apply seal packing to the cylinder head installation surface of the plug.

Seal packing:
Part No. 08826–00080 or equivalent

(b) Install the half–circular plugs to the cylinder head.

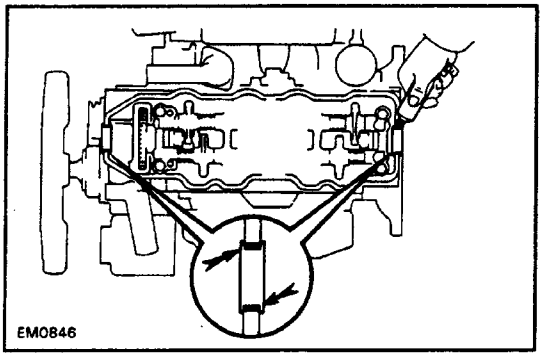

8. INSTALL HEAD COVER

(a) Apply seal packing to the 4 locations shown.

Seal packing:
Part No. 08826–00080 or equivalent

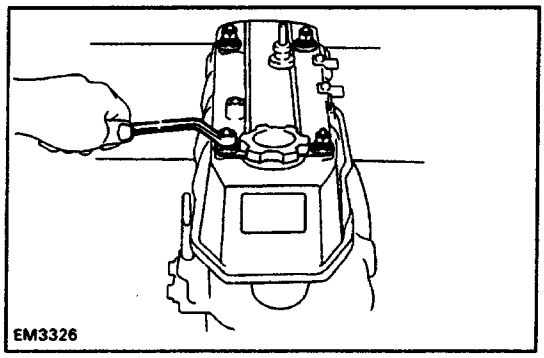

(b) Install the gasket to the cylinder head.

(c) Place the head cover on the cylinder head and install the 4 seals and nuts.

Torque: 4.9 N–m (50 kgf–cm, 43 in.–lbf)

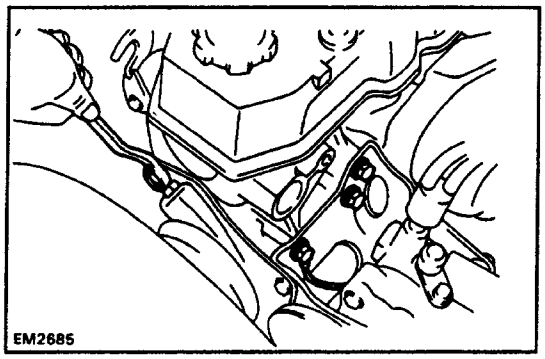

AFTER INSTALLATION

1. w/ PS:

CONNECT PS BRACKET TO CYLINDER HEAD

Install the 4 bolts and bond strap. Torque the bolts.

Torque: 44 N–m (450 kgf–cm, 33 ft–lbf)

2. w/ PS:

INSTALL DRIVE BELT AND ADJUST BELT TENSION

(See step 2 in maintenance operation in Maintenance)

3. CONNECT BYPASS HOSE TO INTAKE MANIFOLD

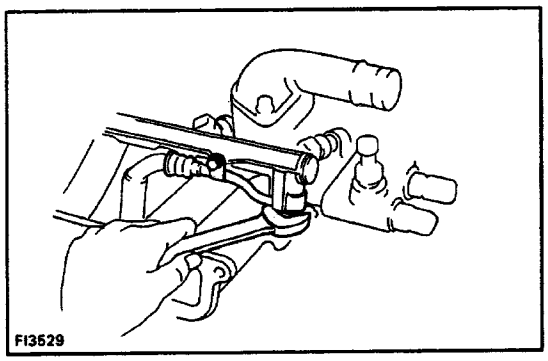

4. CONNECT FUEL HOSE TO DELIVERY PIPE

Install new gaskets and the fuel hose with union bolt.

Torque: 44 N–m (450 kgf–cm. 33 ft–lbf)

5. CONNECT THESE WIRES:

(a) Engine coolant temperature sensor wire
(b) Cold start injector time switch wire
(c) VSV wires
(d) Igniter wire
(e) A/T:
OD temperature switch wire
(f) Engine coolant temperature sender gauge wire
(g) Injector wires
(h) w/ A/C:
Compressor wires
(i) Transmission wires
(j) Starter wire (terminal 50)
(k) Oil pressure sender gauge wire
(1) Knock sensor wire

6. CONNECT FUEL RETURN HOSE

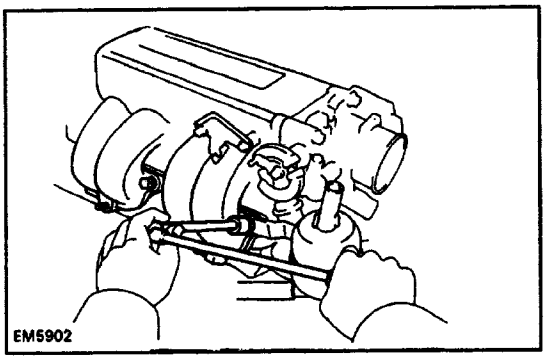

7. INSTALL CHAMBER WITH THROTTLE BODY

(a) Position new gaskets on the intake manifold and No. 1 EGR pipe.
(b) Install the chamber, throttle body, fuel hose clamp, resonator and bond strap with the 4 bolts and 2 nuts.
(c) Connect the chamber and stay with a bolt.
(d) Install the bolts holding the EGR valve to the chamber.
(e) Install the new gaskets and cold start injector pipe.

8. CONNECT THESE WIRES:

(a) California only:
EGR gas temperature sensor wire
(b) Throttle position wire
(c) Cold start injector wire

9. INSTALL EGR VACUUM MODULATOR

10. CONNECT THESE PARTS:

(a) w/ Oil cooler:
Connect the No. 1 oil cooler hose to the intake manifold.
w/o Oil cooler:
Connect the No. 1 water bypass hose to the intake manifold.
(b) No. 2 and No. 3 water bypass hoses to the throttle body
(c) Vacuum hoses to throttle body
(d) Pressure regulator hose
(e) Fuel pressure up hose
(f) PAIR valve hose
(g) EGR valve hose
(h) EGR vacuum modulator hose

(i) EVAP hose
G) w/ A/C:
VSV hoses
(k) w/ PS:
Air control valve hoses
(1) Brake booster hose
(m) No. 1 and No. 2 PCV hoses

11. CONNECT GROUND STRAP TO ENGINE REAR SIDE

12. A/T:
CONNECT THROTTLE CABLE

Connect the throttle cable to the clamp and bracket.

13. CONNECT ACCELERATOR CABLE

14. CONNECT HEATER WATER INLET HOSE TO HEATER WATER INLET PIPE

15. INSTALL RADIATOR INLET HOSE

16. INSTALL SPARK PLUGS

17. INSTALL DISTRIBUTOR

(See distributor installation in ignition System)

18. INSTALL OIL DIPSTICK

19. CONNECT EXHAUST PIPE TO EXHAUST MANIFOLD

(a) Install the new gaskets, and connect the exhaust pipe to the exhaust manifold with the 3 nuts.
(b) Install the exhaust pipe clamp.

20. INSTALL INTAKE AIR CONNECTOR

21. FILL WITH ENGINE OIL

(See step 3 in oil and filter replacement in Lubrication System)

22. FILL WITH COOLANT

(See step 3 in coolant check and replacement in Cooling System)

23. START ENGINE AND INSPECT FOR LEAKS

24. PERFORM ENGINE ADJUSTMENT

(See Tuna –Up)

25. RECHECK COOLANT AND ENGINE OIL LEVEL

26. ROAD TEST VEHICLE

22R–E ENGINE

ENGINE MECHANICAL

DESCRIPTION

The 22R–E engine is an in–line 4 cylinder 2.4 liter OHC 8 valve engine.

OPERATION

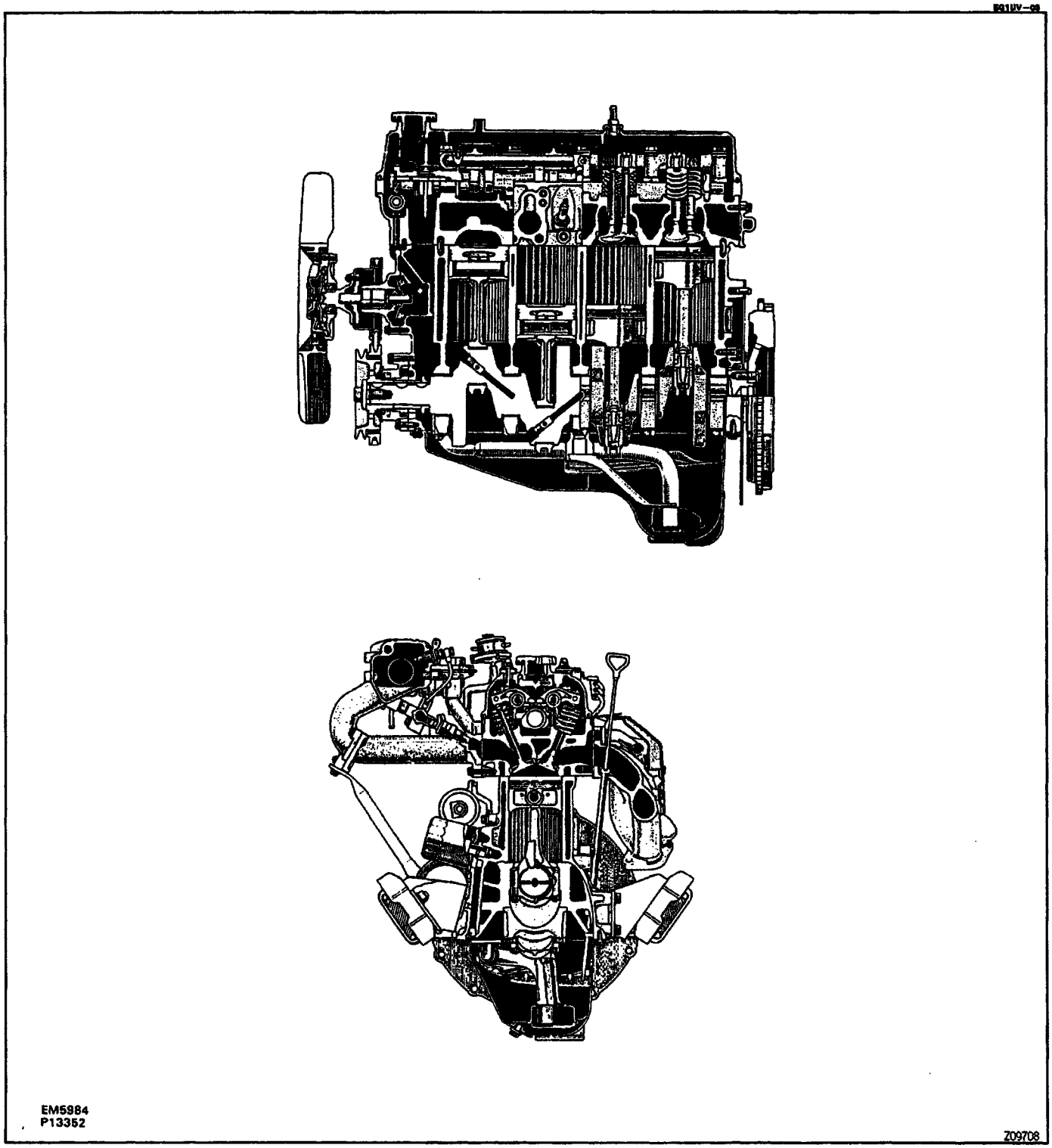

EXHAUST SYSTEM

COMPONENTS

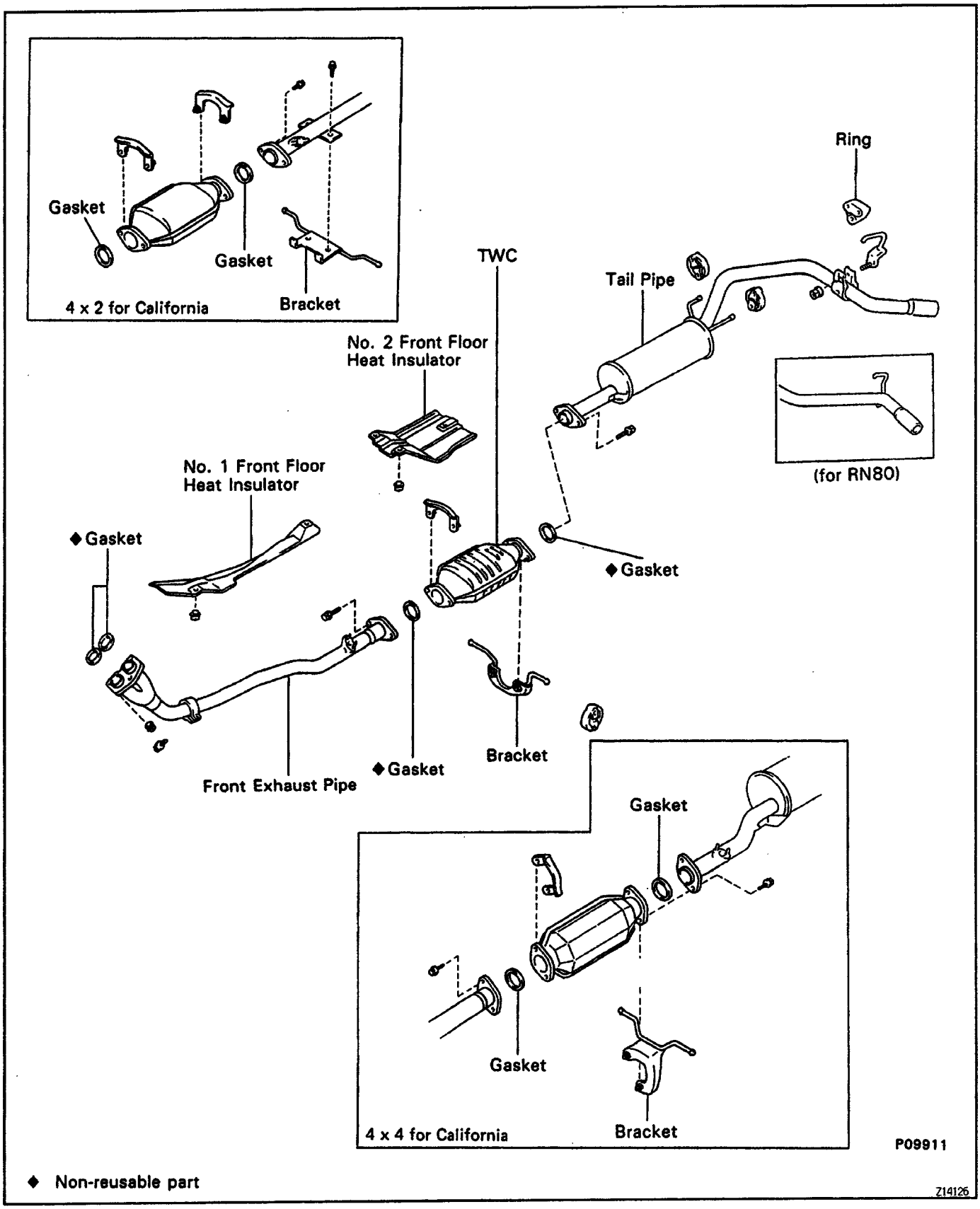

IDLE AND OR 2500 RPM CO HC CHECK

HINT: This check method is used only to determine whether or not the idle and/or 2,500 rpm CO/HC
complies with regulations.

1. INITIAL CONDITIONS

(a) Engine at normal operating temperature
(b) Air cleaner installed
(c) All pipes and hoses of air intake system connected
(d) All accessories switched OFF
(e) All vacuum lines properly connected

HINT: All vacuum hoses for the air suction, EGR systems, etc. should be properly connected.

(f) MFI system wiring connectors fully plugged
(g) Ignition timing set correctly
(h) Transmission in neutral position
(i) Idle speed set correctly
(j) Tachometer and CO/HC meter calibrated by hand

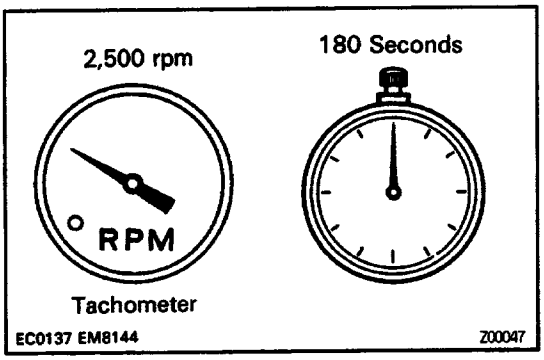

2. START ENGINE

3. RACE ENGINE AT 2,500 RPM FOR APPROX. 180 SECONDS

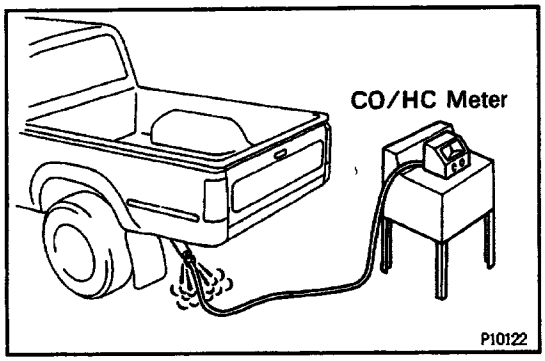

4. INSERT CO/HC METER TESTING PROBE AT LEAST 40 cm (1.3 ft) INTO TAILPIPE DURING IDLING

5. IMMEDIATELY CHECK CO/HC CONCENTRATION AT IDLE AND/OR 2.500 RPM

HINT:
When doing the 2 mode (2,500 rpm and idle) test, follow the measurement order prescribed by the applicable local regulations.

TROUBLESHOOTING

If the CO/HC concentration does not comply with regulations, troubleshoot in the order given below.

(a) Check oxygen sensor operation

(See heated oxygen sensor inspection in MFI System)

(b) See the table below for possible cause, and then inspect and correct the applicable causes if necessary.

CO	HC	Phenomenon	Causes
Normal	High	Rough idle	1. Faulty ignitions: • Incorrect timing • Fouled, shorted or improperly gapped plugs. • Open or crossed high–tension cords • Cracked distributor cap 2. Incorrect valve clearance 3. Leaky EGR valve 4. Leaky intake and exhaust valves 5. Leaky cylinder
Low	High	Rough idle (Fluctuating HC reading)	1. Vacuum leaks: • PCV hose • EGR valve • intake manifold • Air intake chamber • Throttle body • Brake booster line 2. Lean mixture causing misfire
High	High	Rough idle (Black smoke from exhaust)	1. Restricted air filter 2. Plugged PCV valve 3. PAIR system problems 4. Faulty MFI systems: • Faulty pressure regulator • Clogged fuel return line • Defective ECT sensor • Defective intake air temperature sensor • Faulty ECM • Faulty injector • Faulty cold start injector • Faulty throttle position sensor • Faulty volume air flow meter

ENGINE MECHANICAL

DESCRIPTION

The 22R–E engine is an in–line 4 cylinder 2.4 liter OHC 8 valve engine.

OPERATION

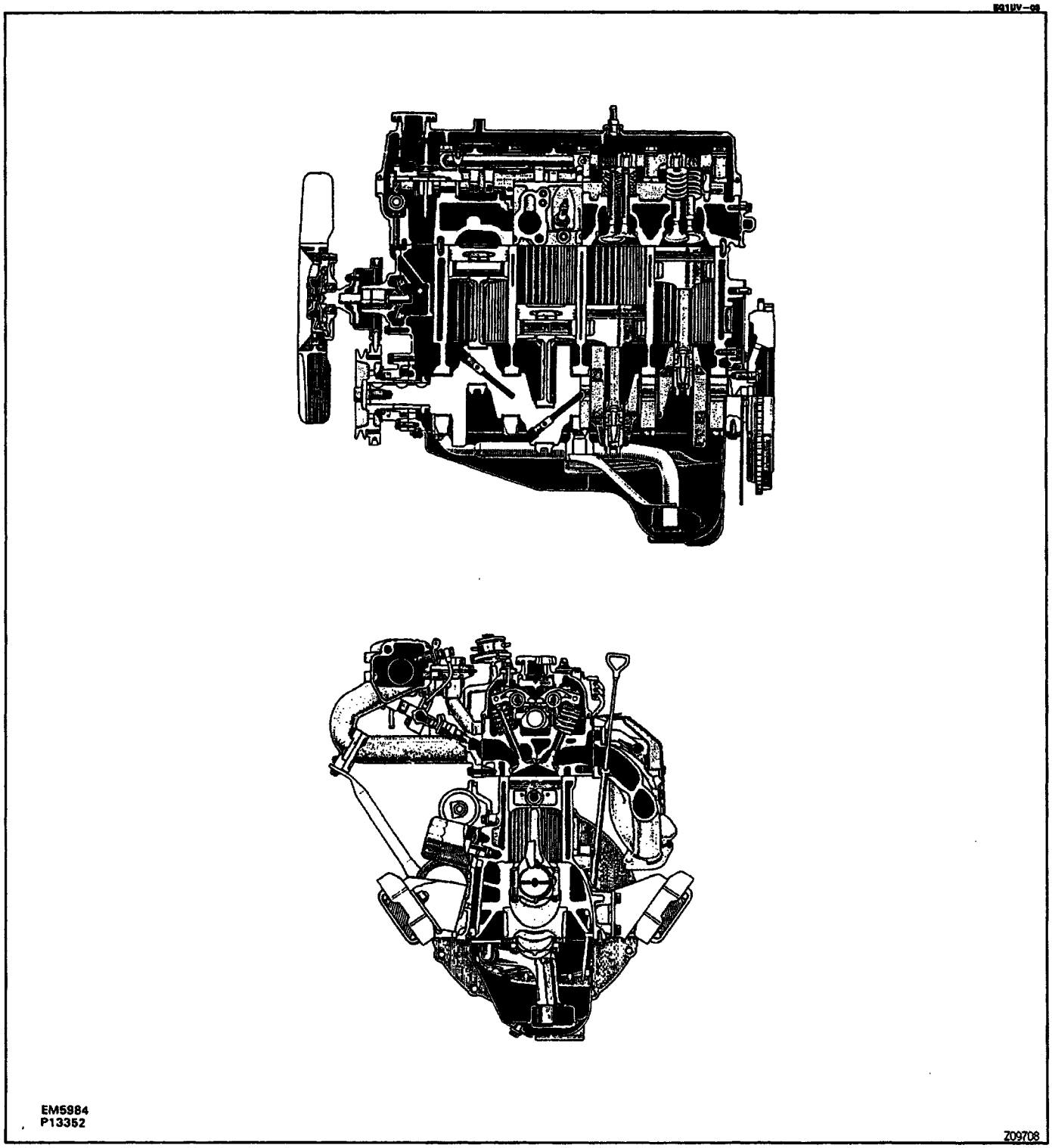

The 22R–E engine is in–line 4–cylinder engine with the cylinders numbered 1–2–3–4 from the front.
The crankshaft is supported by 5 aluminium alloy bearings.
The crankshaft is integrated with 4 weights which are cast with it for balance. Oil holes are made in the center of the crankshaft to supply oil to the connecting rods, bearing, pistons and other components.
The firing order is 1–3–4–2. The cylinder head is made of aluminium alloy, with a cross flow type intake and exhaust layout and with pentroof type combustion chambers. The spark plugs are located to the left of the combustion chambers.
Exhaust and intake valves are equipped with springs made of special valve spring carbon steel which are capable of following the cam profile at all engine speeds.
The camshaft is driven by a timing chain. The cam journal is supported at 3 places, located at the center and the front and rear of each cylinder head. Lubrication of the cam journal gear is accomplished by oil supplied through the oil passage in the cylinder head.
Adjustment of the valve clearance is done by means of an adjusting screw on the rocker arm for .easy adjustment.
The timing chain cover is made of aluminium alloy, with a water pump and oil pump on the outside.
Pistons are made of highly temperature–resistant aluminium alloy, and a depression is built into the piston head to prevent interference with valves.
Piston pins are the full–floating type, with the pins fastened to neither the connecting rods nor the piston boss, but with a snap ring fitted to both ends of each pin to prevent it from slipping out.
The No. 1 compression ring is made of stainless steel and the No. 2 compression ring is made of cast iron. The oil ring is made of stainless steel. The outer diameter of each piston ring is slightly larger than the diameter of the piston and the flexibility of the rings allows them to hug the cylinder walls when they are mounted on the piston. No. 1 and No. 2 compression rings work to prevent leakage of gas from the cylinder and the oil ring works to scrape oil off the cylinder walls to prevent it from entering the combustion chambers.
The cast iron cylinder block has 4 cylinders which are approximately 2 times the length of the piston stroke. The top of each cylinder is closed off by the cylinder head and in the lower end of the cylinders the crankshaft is installed, supported by 5 journals. In addition, the cylinder block contains a water jacket, through which coolant is pumped to cool the cylinders.
The oil pan is bolted onto the bottom of the cylinder block. The oil pan is an oil reservoir made of pressed sheet steel. A dividing plate is included inside the oil pan to keep sufficient oil in the bottom of the pan even when the vehicle is tilted. The dividing plate prevents the intake of air and allows oil circulation to be maintained even if the oil forms waves when the vehicle brakes suddenly.

PREPARATION

SST (SPECIAL SERVICE TOOLS)

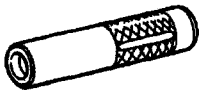	09201–41020	Valve Stem Oil Seal Replacer	
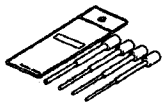	09201–10000	Valve Guide Bushing Remover & Replacer Set	
	(09201–01080)	Valve Guide Bushing Remover & Replacer B	
	09202–43013	Valve Spring Compressor	
	09213–70010	Crankshaft Pulley Holding Tool	
	09222–30010	Connecting Rod Bushing Remover & Replacer	
	09223–15030	Oil Seal & Bearing Replacer	
	09223–50010	Crankshaft Front oil Seal Replacer	Camshaft oil seal
	09330–00021	Companion Flange Holding Tool	Crankshaft pulley
	09213–70010	Crankshaft Pulley Holding Tool	
	09608–35014	Axle Nub & Drive Pinion Bearing Tool Set	
	(09608–06020)	Handle	
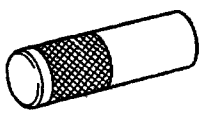	(09608–06040)	——————— Front Hub Inner Bearing Cone Replacer	

	**09843–18020** Diagnosis Check Wire	
	**09950–40010** Puller B Set	
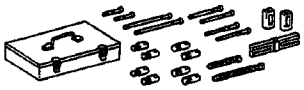	**09950–50010** Puller C Set	

RECOMMENDED TOOLS

	**09090–04010** Engine Sling Device.	For suspending engine
	**09200–00010** Engine Adjust Kit.	
	**09258–00030** Hose Plug Set.	Plug for the vacuum hose, fuel hose etc.
	**09904–00010** Expander Set.	

EQUIPMENT

Battery specific gravity gauge	
Belt tension gauge	
Caliper gauge	
CO/HC meter	
Compression gauge	
Connecting rod aligner	
Cylinder gauge	
Dial indicator	
Dye penetrant	
Engine tune–up tester	

Heater	
Magnetic finger	
Micrometer	
Piston ring compressor	
Piston ring expander	
Plastigage	
Precision straight edge	
Soft brush	
Spring tester	Valve spring
Steel square	Valve spring
Thermometer	
Torque wrench	
Valve seat cutter	
Vernier calipers	

–1–oG

SSM (SERVICE SPECIAL MATERIALS)

08826–00080	Seal Packing Black or equivalent (FIPG)	Camshaft bearing cap Cylinder head cover Rear oil sear retainer
08833–00070	Adhesive 1324, THREE BOND 1324 or equivalent	Flywheel or drive plate mounting bolt

SERVICE SPECIFICATIONS

SERVICE DATA

Compression pressure		STD		1,177 kPa	12.0 kgf/cm²	171 psi
		Minimum		981 kPa	10.0 kgf/cm²	142 psi
	Difference between each cylinder			98 kPa (1.0 kgf/cm², 14 psi) or less		
Cylinder head	Head surface warpage	Maximum		0.15 mm		0.0059 in.
	Manifold surface warpage	Maximum		0.20 mm		0.0079 in.
	Valve seat Refacing angle		Intake	30°, 45°, 60°		
			Exhaust	30°, 45°, 65°		
			Contacting angle	45°		
			Contacting width	1.2 – 1.6 mm		0.047 – 0.063 in.
Valve guide bushing	Inner diameter		Intake	8.01 – 8.03 mm		0.3154 – 0.3161 in.
			Exhaust	8.01 – 8.03 mm		0.3154 – 0.3161 in.
	Outer diameter	STD		13.040 – 13.051 mm		0.5134 – 0.5138 in.
	Replacing temperature (cylinder head aide)	O/S 0.05		13.090 – 13.101 mm		0.5154 – 0.5158 in.
				Approx. 90°C (194°F)		
Valve	Valve overall length	STD	Intake	113.5 mm		4.468 in.
			Exhaust	112.4 mm		4.425 in.
	Valve face angle			44.5°		
	Stem diameter	STD	Intake	7.970 – 7.985 mm		0.3138 – 0.3144 in.
			Exhaust	7.965 – 7.980 mm		0.3136 – 0.3142 in.
	Stem end refacing	Limit		0.5 mm		0.020 in.
	Stem oil clearance	STD	Intake	0.025 – 0.06 mm		0.0010 – 0.0024 in.
			Exhaust	0.03 – 0.065 mm		0.0012 – 0.0026 in.
		Maximum	Intake	0.08 mm		0.0031 in.
			Exhaust	0.10 mm		0.0039 in.
	Valve head edge thickness	STD		1.0 mm		0.039 in.
		Maximum		0.6 mm		0.024 in.
Valve spring	Free length			48.5 mm		1.909 in.
	Installed load at 40.5 mm (1.594 in.)					
		STD		294 N	30.0 kgf	66.1 lbf
		Minimum		279 N	28.5 kgf	62.8 lbf
	Deviation	Maximum		1.6 mm		0.063 in.
Rocker arm and shaft	Rocker arm inside diameter			16.000 – 16.018 mm		0.6299 – 0.6306 in.
	Rocker shaft diameter			15.97 – 15.99 mm		0.6287 – 0.6295 in.
	Shaft to arm oil clearance	STD		0.01 – 0.05 mm		0.0004 – 0.0020 in.
		Maximum		0.08 mm		0.0031 in.
Intake, exhaust manifolds and air intake chamber	Manifold surface warpage					
		Maximum	Intake	0.2 mm		0.008 in.
			Exhaust	0.7 mm		0.028 in.
			Air intake chamber	0.2 mm		0.008 in.
Chain and sprocket	Crankshaft sprocket wear	Minimum		59.4 mm		2.339 in.
	Camshaft sprocket wear	Minimum		113.8 mm		4.480 in.

Tension and damper	Tensioner head thickness	Minimum		11.0 mm	0.433 in.
	No. 1 damper wear	Limit		0.5 mm	0.020 in.
	No. 2 damper wear '	Limit		0.5 mm	0.020 in.
Camshaft	Thrust clearance–	STD		0.08 – 0.18 mm	0.0031 – 0.0071 in.
		Maximum		0.25 mm	0.0098 in.
	Journal oil clearance	STD		0.01 – 0.05 mm	0.0004 – 0.0020 in.
		Maximum		0.1 mm	0.004 in.
	Journal diameter	STD		32.98 – 33.00 mm	1.2984 – 1.2992 in.
	Circle runout	Maximum		0.2 mm	0.008 in.
	Cam height	STD	Intake	42.63 – 42.72 mm	1.6783 – 1.6891 in.
			Exhaust	42.69 – 42.78 mm	1.6807 – 1.6842 in.
		Maximum	Intake	42.25 mm	1.6634 in.
			Exhaust	42.30 mm	1.6654 in.
Cylinder block	Cylinder head surface warpage		Limit	0.05 mm	0.0020 in.
	Cylinder bore	STD	No. 1	92.00 – 92.01 mm	3.6220 – 3.6224 in.
			No. 2	92.01 – 92.02 mm	3.6224 – 3.6228 in.
			No. 3	92.02 – 92.03 mm	3.6228 – 3.6232 in.
	Cylinder bore wear	Limit		0.02 mm	0.008 in.
	Cylinder block main journal bore				
		STD	No. 3	64.004 – 64.010 mm	2.5198 – 2.5201 in.
			No. 4	64.010 – 64.016 mm	2.5201 – 2.5203 in.
			No. 5	64.016 – 64.022 mm	2.5203 – 2.5205 in.
		U/S 0.25		64.004 – 64.022 mm	2.5198 – 2.5205 in.
Piston and piston ring	Piston diameter	STD	No. 1	91.975 – 91.985 mm	3.6211 – 3.6214 in.
			No. 2	91.985 – 91.995 mm	3.6214 – 3.6218 in.
			No. 3	91.995 – 92.005 mm	3.6218 – 3.6222 in.
		O/S 0.50		92.475 – 92.505 mm	3.6407 – 3.6419 in.
		O/S 1.00		92.975 – 93.005 mm	3.6604 – 3.6616 in.
	Piston to cylinder clearance			0.015 – 0.035 mm	0.0006 – 0.0014 in.
	Ring to ring groove clearance				
		STD		0.03 – 0.07 mm	0.0012 – 0.0028 in.
		Maximum		0.2 mm	0.008 in.
	Piston ring end gap	STD	No. 1	0.25 – 0.47 mm	0.0098 – 0.0185 in.
			No. 2	0.60 – 0.82 mm	0.0236 – 0.0323 in.
			Oil	0.20 – 0.57 mm	0.0079 – 0.0224 in.
		Maximum	No. 1	1.07 mm	0.0421 in.
			No. 2	1.42 mm	0.0559 in.
			Oil	1.17 mm	0.0461 in.
	Piston pin installing temperature			80°C	176°F
Connecting rod and bearing	Thrust clearance	STD		0.16 – 0.26 mm	0.0063 – 0.0102 in.
		Maximum		0.3 mm	0.012 in.
	Bearing oil clearance	STD		0.025 – 0.055 mm	0.0010 – 0.0022 in.
		Maximum		0.10 mm	0.0039 in.

Connecting rod and bearing (cont'd)	Big end inner diameter	STD	A	56.000 – 56.006 mm	2.2047 – 2.2050 in.
			B	56.006 – 56.012 mm	2.2050 – 2.2052 in.
			C	56.012 – 56.018 mm	2.2052 – 2.2054 in.
		U/S 0.25		56.000 – 56.018 mm	2.2047 – 2.2054 in.
	Connecting rod bearing center wall thickness				
		STD	A	1.484 – 1.488 mm	0.0584 – 0.0586 in.
			B	1.488 – 1.492 mm	0.0586 – 0.0587 in.
			C	1.492 – 1.496 mm	0.0587 – 0.0589 in.
		U/S 0.25		1.626 – 1.636 mm	0.0640 – 0.0644 in.
	Pin to bushing oil clearance				
		STD		0.005 – 0.011 mm	0.0002 – 0.0004 in.
		Maximum		0.015 mm	0.0006 in.
	Rod out–of–alinment per 100 mm (3.94 in.)				
		Maximum		0.05 mm	0.0020 in.
	Rod twist per 100 mm (3.94 in.)				
		Maximum		0.15 mm	0.0059 in.
Crankshaft	Thrust clearance	STD		0.02 – 0.22 mm	0.0008 – 0.0087 in.
		Maximum		0.3 mm	0.012 in.
	Thrust washer thickness	STD		2.690 – 2.740 mm	0.1059 – 0.1079 in.
		O/S 1.25		2.753 – 2.803 mm	0.1084 – 0.1104 in.
		O/S 2.50		2.815 – 2.865 mm	0.1108 – 0.1128 in.
	Main journal oil clearance	STD		0.025 – 0.055 mm	0.0010 – 0.0022 in.
		Maximum		0.08 mm	0.0031 in.
	Main journal diameter Main journal finished diameter	STD		59.984 – 60.000 mm	2.3616 – 2.3622 in.
		U/S 0.25		59.701 – 59.711 mm	2.3504 – 2.3508 in.
	Main bearing center wall thickness				
		STD	No. 3	1.988 – 1.992 mm	0.0783 – 0.0784 in.
			No. 4	1.992 – 1.996 mm	0.0784 – 0.0786 in.
			No. 5	1.996 – 2.000 mm	0.0786 – 0.0787 in.
		U/S 0.25		2.216 – 2.136 mm	0.0837 – 0.0841 in.
	Crank pin diameter Crank pin finished diameter	STD		52.988 – 53.000 mm	2.0861 – 2.0866 in.
		U/S 0.25		52.701 – 52.711 mm	2.0748 – 2.0752 in.
	Circle runout	Maximum		0.1 mm	0.004 in.
	Main journal taper and out–of–round				
		Maximum		0.01 mm	0.0004 in.
	Crank pin journal taper and out–of round				
		Maximum		0.01 mm	0.0004 in.

TORQUE SPECIFICATIONS

Part tightened	N–m	kgf–cm	ft–lbf
Cylinder head x Cylinder head cover	4.9	50	43 in.-lbf
Cylinder head x Camshaft bearing cap	20	200	14
Cylinder head x Spark plug	18	180	13
Cylinder head x Intake manifold	19	195	14
Cylinder head x No. 1 secondary air injection manifold	13	130	9
Cylinder head x EGR valve	13	130	9
Cylinder head x Exhaust manifold	44	450	33
Cylinder head x Cylinder head rear cover	13	130	9
Cylinder block x Cylinder head	78	800	58
Cylinder block x Chain damper	22	220	16
Cylinder block x Chain tensioner	19	195	14
Cylinder block x Engine mounting	39	400	29
Cylinder block x Rear oil seal retainer	18	180	13
Cylinder block x Fuel filter bracket	19	195	14
Oil cooler relief valve x Cylinder block	69	700	51
Cylinder block x Crankshaft bearing cap	103	1,050	76
Cylinder block x Oil strainer	13	130	9
Cylinder block x Oil pan	13	130	9
Cylinder block x Engine mounting bracket	44	400	33
Valve clearance adjusting screw	25	250	18
Camshaft x Distributor drive gear	78	800	58
Crankshaft pulley x No. 2 crankshaft pulley	19	195	14
Air intake chamber x EGR pipe	13	130	9
Air intake chamber x Intake manifold	19	195	14
Air intake chamber x Accelerator control cable bracket	13	130	9
Intake manifold x Water outlet	19	195	14
Intake manifold x PAIR valve	13	130	9
No. 1 secondary sir injection manifold x PAIR valve	13	130	9
No. 1 secondary sir injection manifold x No. 2 secondary air injection manifold	13	130	9
Exhaust manifold x No. 2 exhaust manifold heat insulator	19	195	14
Exhaust manifold x No. 2 secondary air injection manifold			
10 mm bolt	44	450	33
8 mm bolt	22	220	16
Connecting rod x Connecting rod cap	69	700	51
Crankshaft x Crankshaft pulley	157	1,600	116
Crankshaft x Flywheel	108	1,100	80
Crankshaft x Drive plate	83	850	61
Oil pan x Drain plug	25	250	18

TIMING CHAIN

COMPONENTS FOR REMOVAL AND INSTALLATION

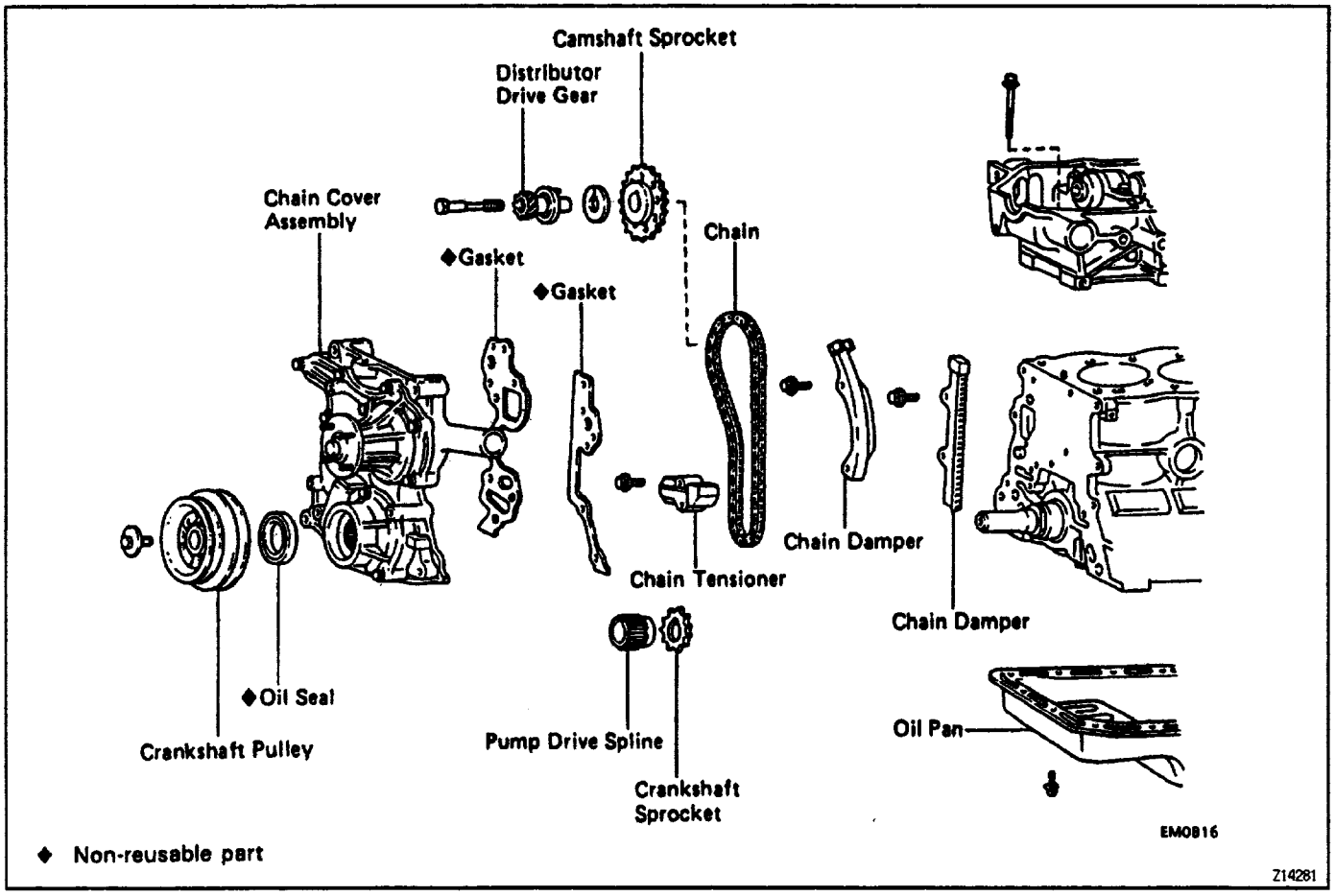

PREPARATION OF REMOVAL

1. REMOVE CYLINDER HEAD

(See preparation removal in Cylinder head)

2. REMOVE RADIATOR

(See radiator removal in radiator in Cooling System)

3. 4WD:

REMOVE FRONT DIFFERENTIAL

(See front differential removal in front differential in Suspension and Axis)

4. REMOVE OIL PAN

(a) Remove the engine undercover.

(b) Remove the 16 bolts and 2nuts.

(c) Using SST and brass bar, separate the oil pan from the cylinder block.

SST 08032–00100

HINT: When removing the oil pan, be careful not to damage the oil pan flange.

TIMING CHAIN REMOVAL

1. w/ PS:
REMOVE PS BELT
2. w/ A/C:
REMOVE A/C BELT, COMPRESSOR AND BRACKET

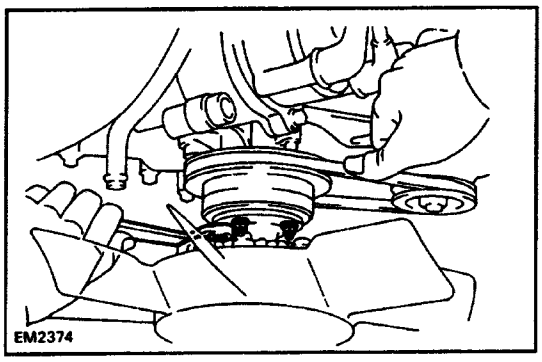

3. REMOVE FLUID COUPLING WITH FAN AND WATER PUMP PULLEY
(a) Loosen the water pump pulley set bolts.
(b) Loosen the belt adjusting bolt and pivot bolt of the generator, and remove the drive belt.
(c) Remove the set nuts, fluid coupling with fan and water pump pulley.

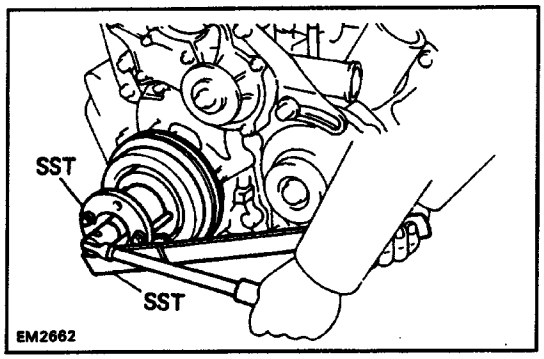

4. REMOVE CRANKSHAFT PULLEY
(a) w/ A/C (w/o Air pump) or w/PS (w/ Air pump): Remove the No. 2 crankshaft pulley.
(b) Using SST to hold the crankshaft pulley, loosen the pulley bolt.
SST 09213–70010, 08330–00021

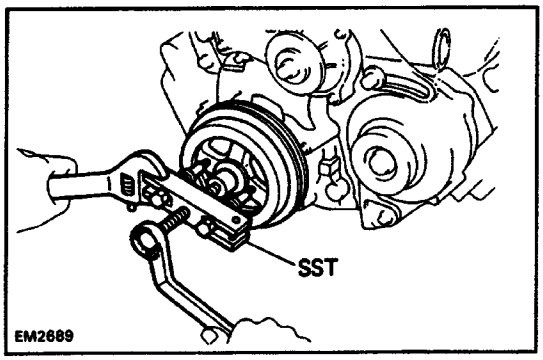

(c) Using SST, remove the crankshaft pulley.
SST 09213–310231
HINT: If the front seal is to be replaced, see front oil seal replacement in oil pomp in Lubrication System.

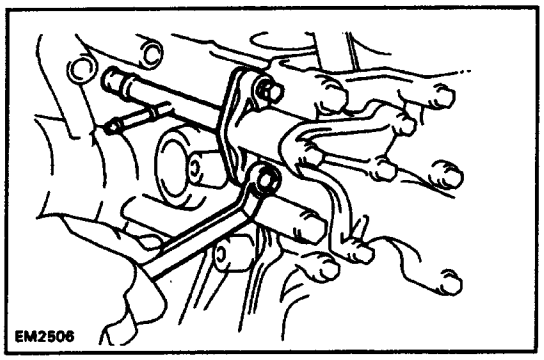

5. REMOVE NO. 1 WATER BYPASS PIPE
Remove the 2 bolts and pipe.

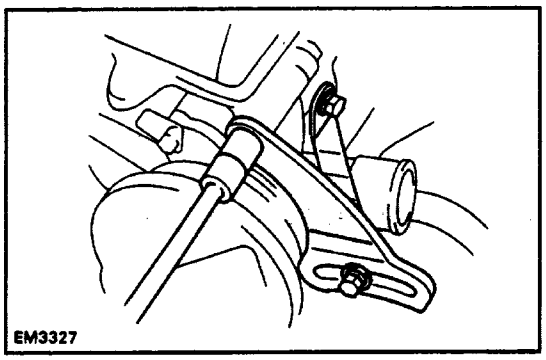

6. REMOVE FAN BELT ADJUSTING BAR

(a) w/ PS:

Remove the bolt and PS lower bracket.

(b) Remove the 3 bolts and bar.

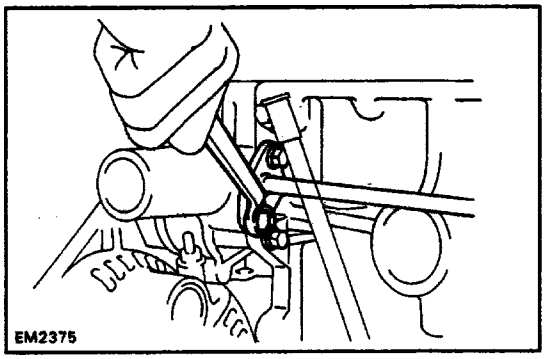

7. DISCONNECT HEATER WATER OUTLET PIPE

Remove the 2 bolts, and disconnect heater water outlet pipe.

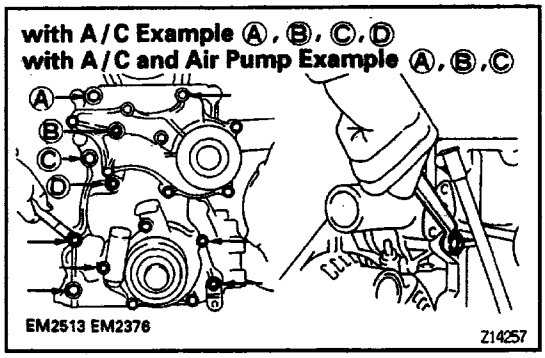

8. REMOVE CHAIN COVER ASSEMBLY

4a) Remove timing chain :cover bolts shown by the arrows.

(b) Using a plastic faced hammer, loosen the chain cover and remove it.

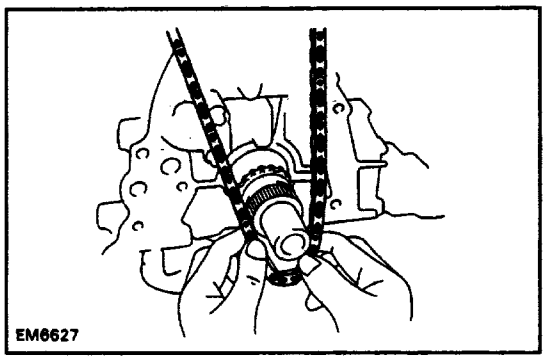

9. REMOVE CHAIN AND CAMSHAFT SPROCKET

(a) Remove the chain from the damper.

(b) Remove the cam sprocket and chain together.

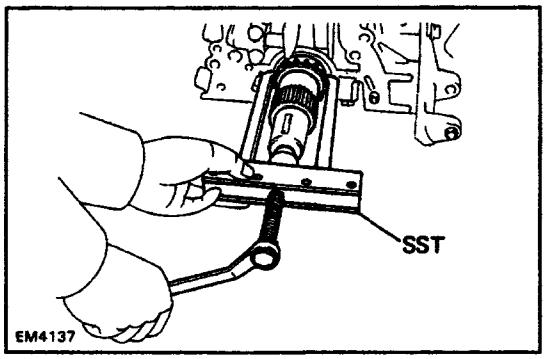

10. REMOVE PUMP DRIVE SPLINE AND CRANKSHAFT SPROCKET

If the oil pump drive spline and sprocket cannot be removed by hand, use SST to remove them together.

SST 09213 – 35020

11. REMOVE GASKET MATERIAL ON CYLINDER BLOCK

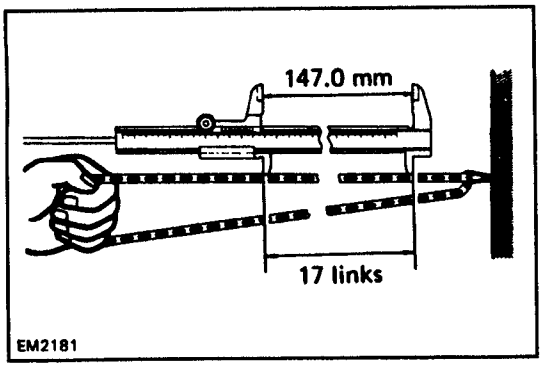

COMPONENTS INSPECTION

1. MEASURE CHAIN AND SPROCKET WEAR

(a) Measure the length of 17 links with the chain fully stretched.

(b) Make the same measurements at least 3 other places selected at random.

Chain elongation limit at 17 links:
147.0 mm (5.787 in.)

If over the limit at any one place, replace the chain.

(c) Wrap the chain around the sprocket.

(d) Using a caliper gauge, measure the outer sides of the chain rollers as shown. Measure both sprockets.

Crankshaft sprocket minimum:
59.4 mm (2.339 in.)
Camshaft sprocket minimum:
113.8 mm (4.480 in.)

If the measurement is less than minimum, replace the chain and 2 sprockets.

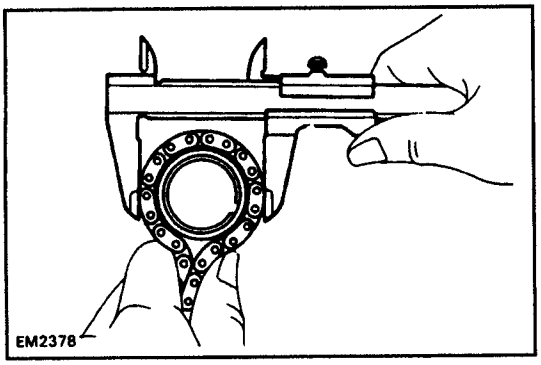

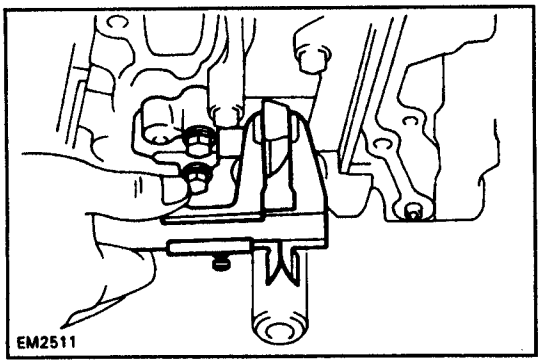

2. MEASURE CHAIN TENSIONER

Using a caliper gauge, measure the tensioner as shown.

Tensioner minimum:
11.0 mm (0.433 in.)

If the tensioner is worn or less than minimum, replace the chain tensioner.

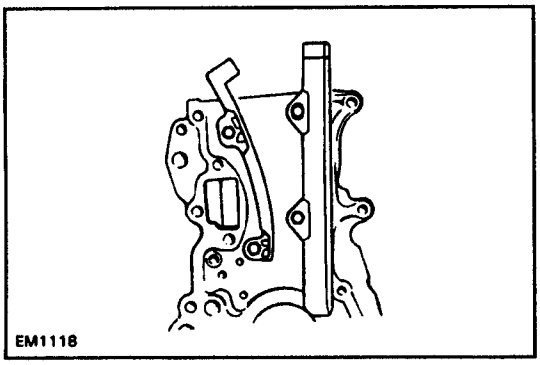

3. MEASURE CHAIN DAMPERS

Using a micrometer, measure each damper.

Damper wear limit:
0.5 mm (0.020 in.)

If either damper is worn or less than minimum, replacE the damper.

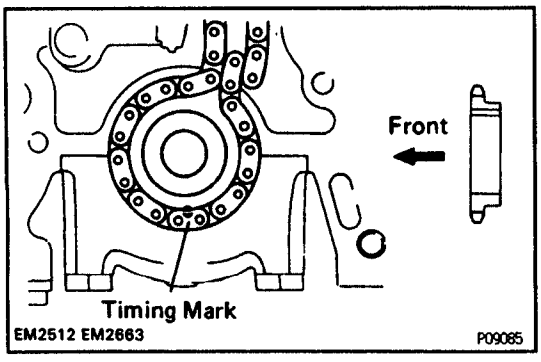

TIMING CHAIN INSTALLATION

(See Components for Removal and Installation)

1. INSTALL CRANKSHAFT SPROCKET AND CHAIN

(a) Turn the crankshaft until the shaft key is on top.

(b) Slide the sprocket over the key on the crankshaft.

(c) Place the timing chain on the sprocket with the single bright chain link aligned with the timing mark on the sprocket.

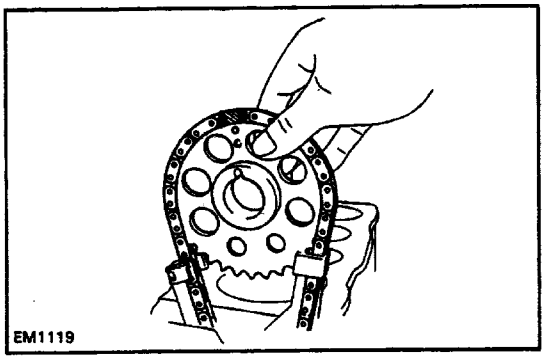

2. PLACE CHAIN ON CAMSHAFT SPROCKET

(a) Place the timing chain on the sprocket so that the bright chain link is aligned with the timing mark on the sprocket.

(b) Make sure the chain is positioned between the dampers.

(c) Turn the camshaft sprocket counterclockwise to take the slack out of the chain.

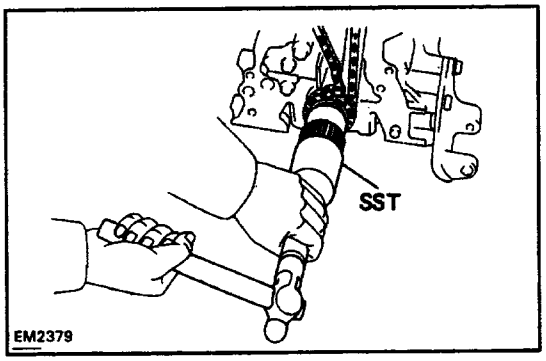

3. INSTALL OIL PUMP DRIVE SPLINE

Slide the oil pump drive spline over the crankshaft key.

HINT: If the oil pump drive spline is difficult to install by hand, install using SST.

SST 09608 – 35014 (09608 – 06040)

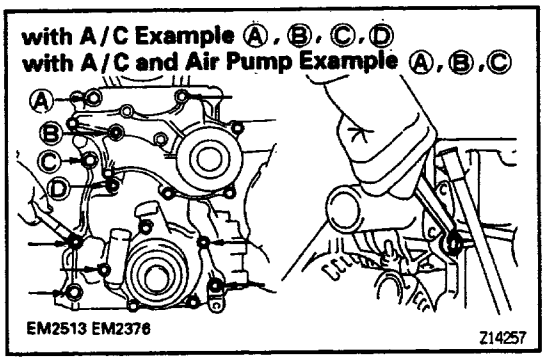

4. INSTALL TIMING CHAIN COVER ASSEMBLY

(a) Remove the old cover gaskets. Clean the gasket surface. Install new gaskets over the dowels.

(b) Slide the cover assembly over the dowels and pump spline.

(c) Insert the bolts as shown and torque them.

Torque:

8 mm bolt: 13 N–m (130 kgf–cm. 9 ft–lbf)

10 mm bolt: 39 N–m (400 kgf, 29 ft–lbf)

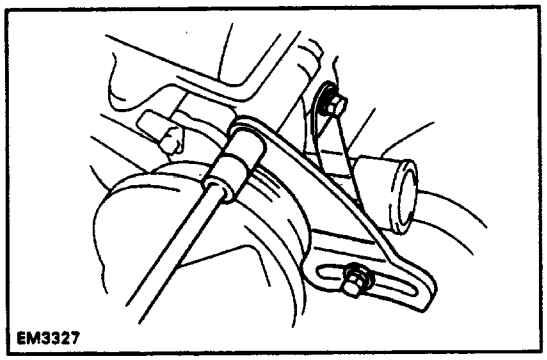

6. INSTALL FAN BELT ADJUSTING BAR

(a) Temporarily install the adjusting bar to the alternator.

(b) Install the adjusting bar to the chain cover and cylinder head.

Torque: 13 N–m (130 kgf–cm, 9 ft–lbf)

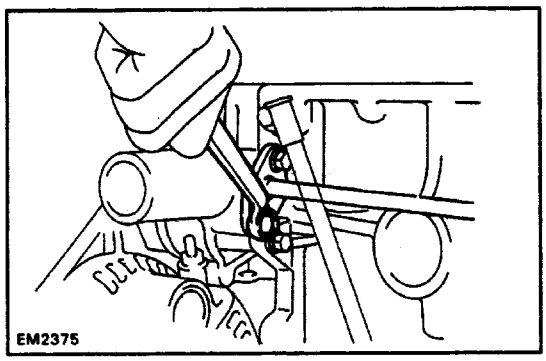

6. INSTALL HEATER WATER OUTLET PIPE

Connect the heater water outlet pipe to the timing chain cover with the 2 bolts.

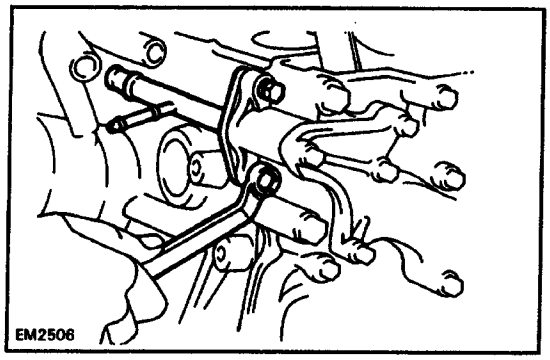

7. INSTALL NO.1 WATER BYPASS PIPE

Install the pipe with the 2 bolts.

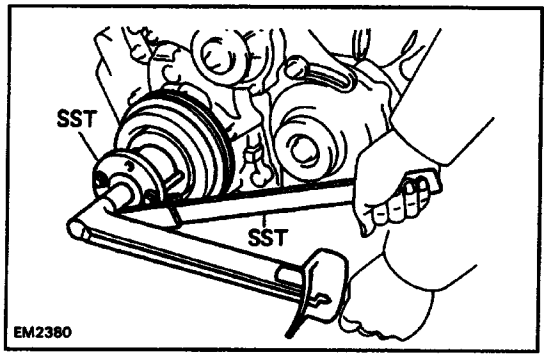

8. INSTALL CRANKSHAFT PULLEY

(a) Install the crankshaft pulley and bolt.

(b) Using SST to hole the crankshaft pulley, torque the bolt.

SST 09213–70010 and 09660–00021

Torque: 157 N–m(1,600 kgf–cm, 116 ft–lbf)

(c) w/ A/C:

Install the No.2 crankshaft pulley.

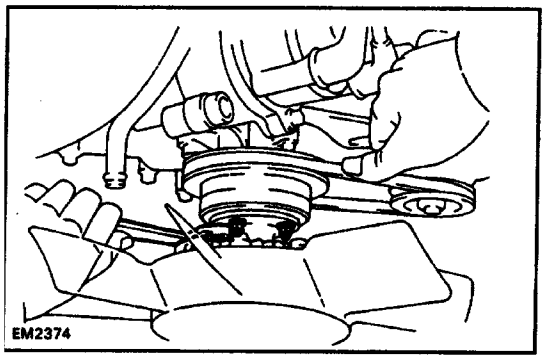

9. INSTALL WATER PUMP PULLEY AND FLUID COUPLING WITH FAN

(a) Temporarily install the water pump pulley and fluid coupling with fan with the 4 nuts.

(b) Place the drive belt onto each pulley.

(c) Stretch the belt tight and tighten the 4 nuts.

10. ADJUST DRIVE BELT TENSION

(See step 2 in maintenance operations in Maintenance)

11. w/ A/C:

INSTALL A/C COMPRESSOR BRACKET, COMPRESSOR AND BELT

(See step 2 in maintenance operations in Maintenance)

12. w/PS:

INSTALL PS BELT

(See step 2 in maintenance operations in Maintenance)

13. INSTALL OIL PAN

(a) Remove any old packing material and be careful not to drop any oil on the contacting surfaces of the oil pan and cylinder block.

- Using a razor blade and gasket scraper, remove all the packing (FIPG) material from the gasket surfaces.
- Thoroughly clean all components to remove all the loose material.

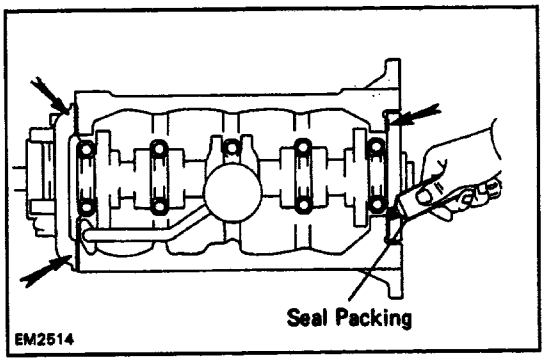

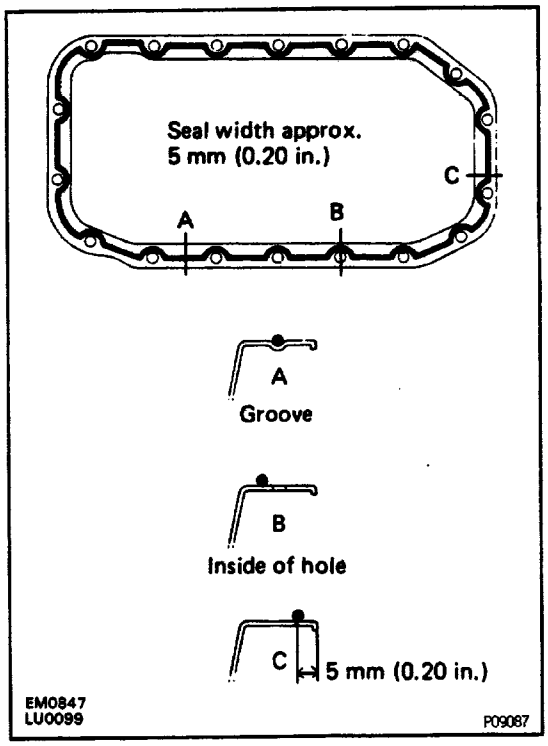

- Clean both sealing surfaces with a non–residue solvent.

NOTICE: Do not use a solvent which will affect the painted surfaces.

(b) Apply seal packing to the joint part of the cylinder block and chain cover, cylinder block and rear oil seal retainer.

Seal packing:

Part No.08826 – 00080 or equivalent

(c) Apply seal packing to the oil pan as shown in the illustration.

Seal packing:

Part No.08826–00080 or equivalent

- Install a nozzle that has been cut to a 5–mm (0.20 in.) opening.

HINT: Avoid applying an excessive amount to the surface. Be especially careful near oil passages.

- If parts are not assembled within 5 minutes of applying the seal packing, the effectiveness of the seal packing is lost and the seal packing must be removed and reapplied.
- Immediately remove the nozzle from the tube and reinstall the cap after using the seal packing.

(d) Install the oil pan over the studs on the block with the 16 bolts and 2 nuts. Torque the bolts and nuts.

Torque: 13N–m (130 kgf–cm, 9 ft–lbf)

(e) Lower the engine and install the engine mounting bolts.

(f) Install the engine under cover.

14. INSTALL RADIATOR

15. INSTALL CYLINDER HEAD

(See cylinder head installation in cylinder head)

16. 4WD:

INSTALL FRONT DIFFERENTIAL

(See SA section)

TROUBLESHOOTING

Use the below to help you find the cause of the problem.
The numbers indicate the priority of the likely cause of the problem. Check each part in order. If necessary, replace these parts.

	See page	IG–4	IG–4	EG1–197	EG1–134, 151	EG1–131, 150	EG1–131, 151	EG1–130, 148		-	-	-	EG1–163	EG1–172	EG1–178	EG1–174		EG1–169, 193
	Suspect area	RPM Signal Circuit	Ignition Circuit	Heated Oxygen Sensor Circuit	Engine Coolant temp. Sensor Circuit	Intake Air temp. Sensor Circuit	Volume Air Flow Meter Circuit	Throttle Position Sensor Circuit	STA Signal Circuit	Knock Sensor Circuit	PNP Signal Circuit	A / C Signal Circuit	Fuel Pump	Fuel Pressure Regulator	Fuel lines	Injectors	Cold Start System	Auxiliary Air Valve
	Symptom																	
Does not start	Engine does not crank																	
	Starter runs – engine does not crank																	
	No initial combustion	12	2				5						6				13	8
	No complete combustion				4		1							3		9	10	2
Difficult to start	Engine cranks slowly											2						
	Engine cranks normally	12	13		4	14							7	6	8	16	17	3
	Cold engine				1	6			2				8	7	9	10	5	4
	Hot engine				1	5							8	7	9	10	6	3
Poor idling	Incorrect first idle				3													4
	Nigh engine idle speed				4	6		7			9	8				10	11	5
	Low engine idle speed				1		4									5		2
	Rough idling		18		2		12						7	6	8	16	17	9
	Misfire		4		6		8									9	10	
Poor driveability	Hesitant acceleration			12	10	11	9	8					14	13	15	18	19	
	Backfire			6	3	7	5	4					9	8	10	11		
	Muffler explosion (after fire			8	3	7	5	6						4		9	10	
	Surging													1		4		
	Knocking									1								
Engine stall	Engine after starting				8		7						3	2	4	9	10	6
	After accelerator pedal depressed						1	3						5	6	7		
	After accelerator pedal released						3											1
	During A/C operation											1						2
	When shifting N to D										1							2
Others	Poor fuel economy			21	16	22	18	17			19	20				14	15	
	Engine overheat									9								
	Engine overcool																	
	Excessive oil consumption																	
	Low oil pressure																	
	High oil pressure																	
	Starter keeps running																	
	Battery often discharge																	

HINT: When inspecting a wire harness or circuit, the electrical wiring diagrams at the end of this repair manual should be referred to and the circuits of related systems also should be checked.

	See page	EG1–191	EG1–192	EG1–205	EG1–195	EG1–201	–	–	–	–	ST–15	CL–Sec.	ST–4	IG–6	IG–8	EG1–91	–	–
	Suspect area / Symptom	EFI Main Relay	Circuit Opening Relay	Fuel Cut System	Fuel Pressure Control System	Engine Control Module	Fuel Quality	Fuel Leakage	Engine Coolant Leakage	Oil Leakage	Starter Relay	PNP SW or Clutch Start SW	Starter	Spark Plug	Distributor	EGR System	Accelerator Pedal Link	Brakes Drag Eve When Released
Does not start	Engine does not crank										1	3	2					
	Starter runs – engine does not crank												1					
	No combustion	3	4			14	7								1			
	No complete combustion					11												
Difficult to start	Engine cranks slowly												1					
	Engine cranks normally					18	1							2	15	5		
	Cold engine					11	3											
	Hot engine				4	11	2											
Poor idling	Incorrect first idle					5											1	
	High engine idle speed					12											1	
	Low engine idle speed					6										1		
	Rough idling					19	1							4	5	3		
	Misfire					11	1							3	5	2		
Poor driveability	Hesitant acceleration					20	3							5	6	4		2
	Backfire					12										1		
	Muffler explosion (after fire)			1		11												
	Surging					5								2	3			
	Knocking					10	2							3		4		
Engine stall	Soon after starting					11	1									5		
	After accelerator pedal depressed					8								4		2		
	After accelerator pedal released					4										2		
	During A/C operation					3												
	When shifting N to D					3												
Others	Poor fuel economy			8			2	1						9	10	7	3	6
	Engine overheat								1					1				
	Engine overcool																	
	Excessive oil consumption									1								
	Low oil pressure									1								
	High oil pressure																	
	Starter keeps running										1		2					
	Battery often discharges																	

V05952

—	EG1–183	EG1–184	CL Sec.	EG1–14	EG1–13	EG1–38	EG1–38	EG1–212	EG1–23	EG1–225	EG1–51	EG1–54	EG1–21	EG1–58	—	EG1–217	EG1–216	CH–6	BE Sec.	BE Sec.	CH–9	EG1–55
Cooling Fan System	Dash Pot	Throttle Opener	Clutch	Compression	Valve Clearance	Valve Timing	Tithing Belt	Water Pump	Valve Stem Guide Bushing	Oil Pump	Connecting Rod Bearing	Crankshaft Bearing	Cylinder Head	Piston Ring	Flywheel or Drive Plate	Radiator and Radiator Cap	Thermostat	Drive Belt	Eng Coolant Temp. Sensor Gaauge	Oil Pressure Switch	Generator	Cylinder Block
															2							
				9		10	11															
				5		7	8							6								
											3	4										
				9		11								10								
	2	3																				
	2																					
				10	13	14	15						20	11								
				7																		
			1	7	16	17																
						2																
						2																
7						5		9								6	8					
	4		5	11		13								12								
2						7	5	6			10		11			3	4		13			12
1																	2		3			
				3					2				5	4								6
										2	3	4								5		
										1										2		
																		1			2	

TUNE–UP

ENGINE COOLANT INSPECTION

(See steps 1 and 2 in coolant check and replacement in Cooling System)

ENGINE OIL INSPECTION

(See steps 1 and 2 in oil pressure check in Lubrication System)

AIR FILTER INSPECTION

(See step 4 in maintenance operation in Maintenance)

BATTERY INSPECTION

(See on–vehicle inspection in Charging System)

HIGH–TENSION CORD INSPECTION

(See high–tension cords inspection in on–vehicle Inspection in Ignition System)

SPARK PLUGS INSPECTION

(See spark plugs inspection in on–vehicle Inspection in Ignition System)

DRIVE BELTS INSPECTION

(See step 2 in maintenance operation in Maintenance)

VALVE CLEARANCE INSPECTION AND ADJUSTMENT

(See step 14 in maintenance operation In Maintenance)

IGNITION TIMING INSPECTION AND ADJUSTMENT

(See step S in distributor installation in distributor in Ignition System)

IDLE SPEED INSPECTION AND ADJUSTMENT

(See step 15 in maintenance operation in Maintenance)
HINT: Adjust idle mixture as necessary.

LUBRICATION SYSTEM

DESCRIPTION

A fully pressurized, fully filtered lubrication system is used in this engine.

OPERATION

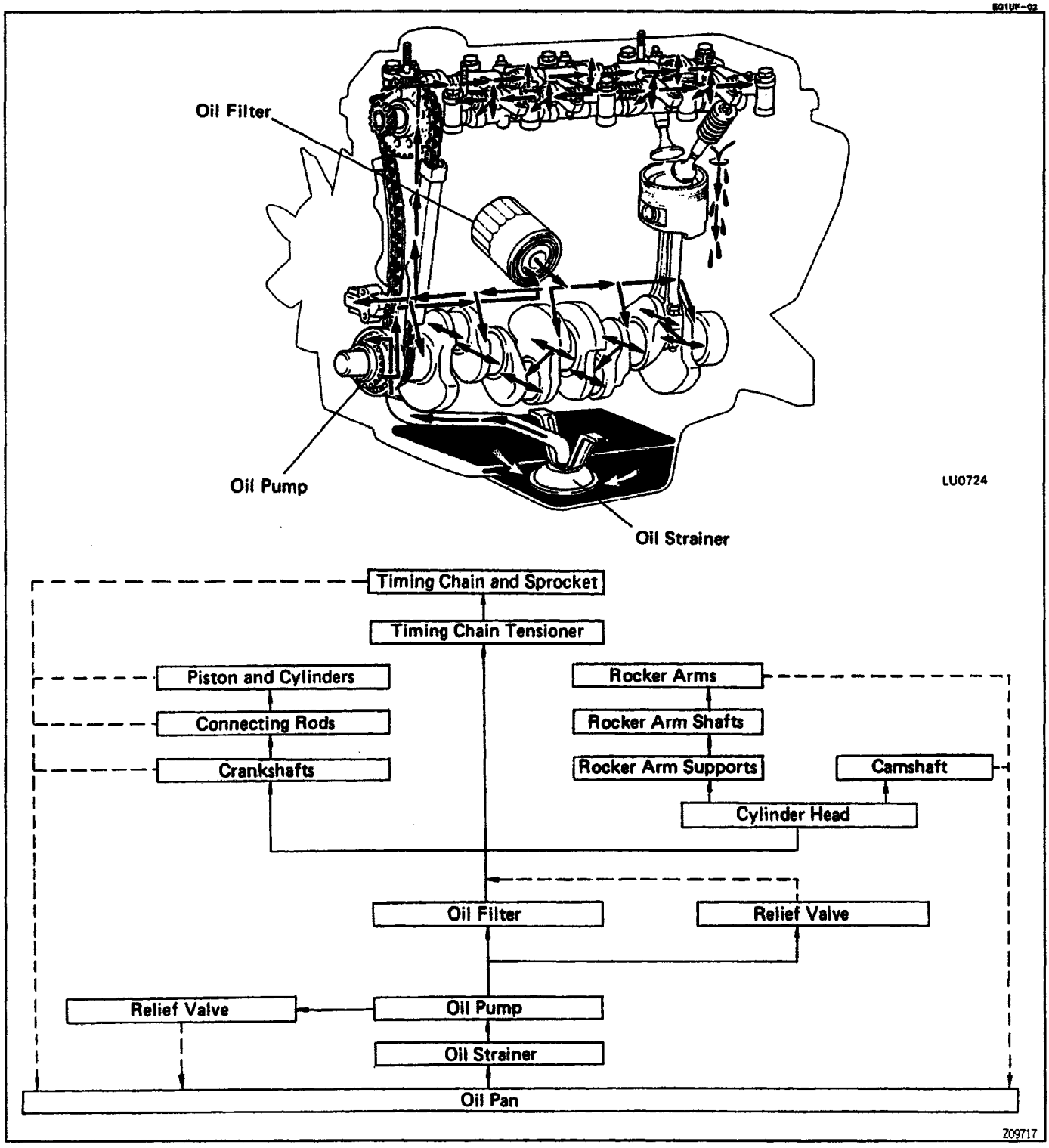

OIL AND FILTER REPLACEMENT

CAUTION:

- **Prolonged and repeated contact with mineral oil will result in the removal of natural fats from the skin, leading to dryness, irritation and dermatitis. In addition, used engine oil contains potentially harmful contaminants which may cause skin cancer.**
  Adequate means of skin protection and washing facilities should be provided.
- **Care should be taken, therefore, when changing engine oil, to minimize the frequency and length of time your skin is exposed to used engine oil.**
  Protective clothing and gloves, that cannot be penetrated by oil, should be worn. Wash your skin thoroughly with soap and water, or use waterless hand cleaner, to remove any used engine oil. Do not use gasoline, thinners, or solvents.
- **In order to preserve the environment, used oil and used oil filters must be disposed of only at designated disposal sites.**

1. DRAIN ENGINE OIL

(a) Remove the oil filter cap.
(b) Remove the oil dipstick.
(c) Remove the oil drain plug and drain the oil into a container.

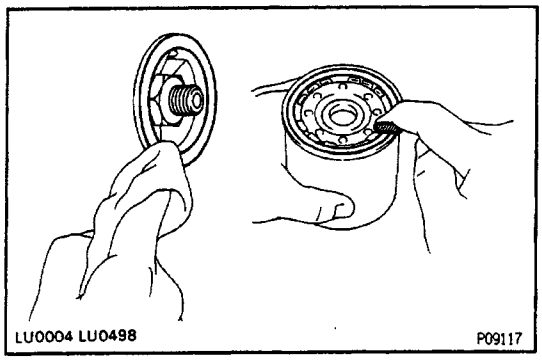

2. REPLACE OIL FILTER

(a) Using SST, remove the oil filter (located on right side of the engine block).
SST 09228–07500
(b) Clean the filter contact surface on the filter mounting.
(c) Lubricate the filter rubber gasket with engine oil.

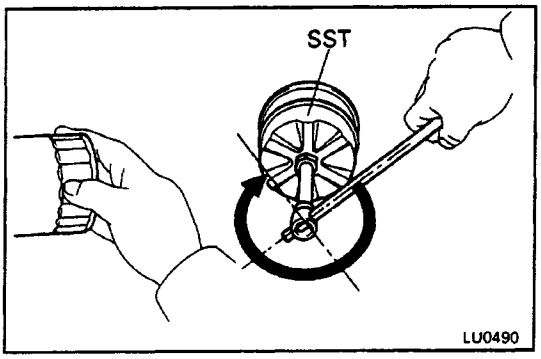

(d) Tighten the filter by hand until the gasket contacts the seat of the filter mounting. Then, using SST, give it an additional3/4 turn to seat the filter.
SST 09228–07500

3. FILL WITH ENGINE OIL

(a) Clean and install the oil drain plug with a new gasket.

(b) Fill the engine with new oil, API grade SG multigrade, fuel efficient and recommended viscosity oil.

Oil capacity:

Drain and refill

w/o Oil filter change

3.8 liters (4.0 US qts. 3.3 Imp. qts)

w/ Oil filter change

4.3 liters (4.5 US qts. 3.8 Imp. qts)

Dry fill

4.8 liters (5.1 US qts, 4.2 Imp. qts)

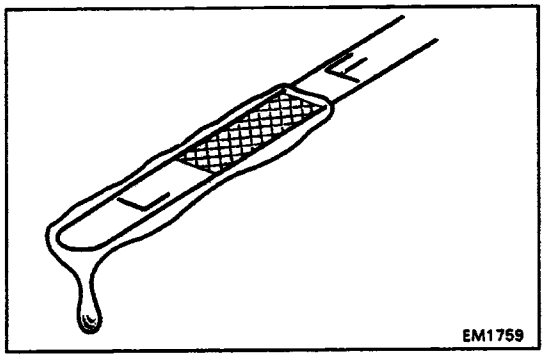

4. START ENGINE AND CHECK FOR LEAKS

5. RECHECK ENGINE OIL LEVEL

Recheck the engine oil level and refill as necessary.

HINT: Insert the oil dipstick with the curved tip pointed toward the engine.

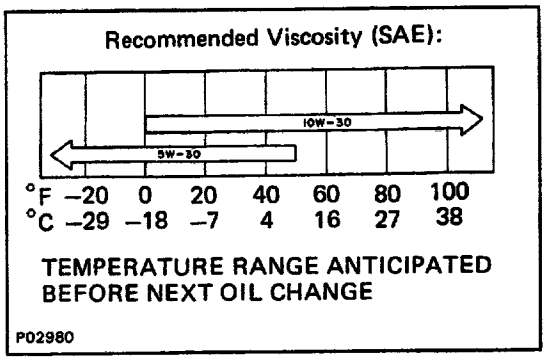

OIL PRESSURE CHECK

1. CHECK OIL QUALITY

Check the oil for deterioration, entry of water, discoloring or thinning.

If oil quality is visibly poor, replace.

Oil grade:

AN grade SH, Energy Conserving II or ILSAC multigrade engine oil. Recommended viscosity is as shown, in the illustration.

2. CHECK OIL LEVEL

The oil level should be between the ”L” and ”F” marks on the level gauge. If low, check for leakage and add oil up to the ”F” mark.

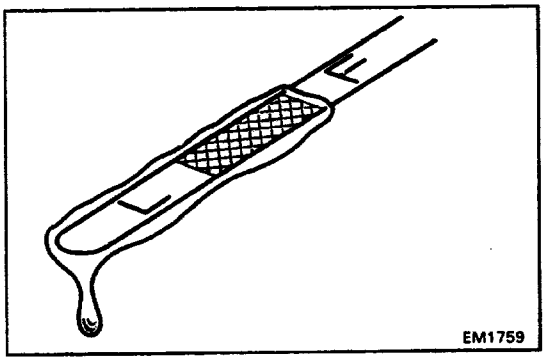

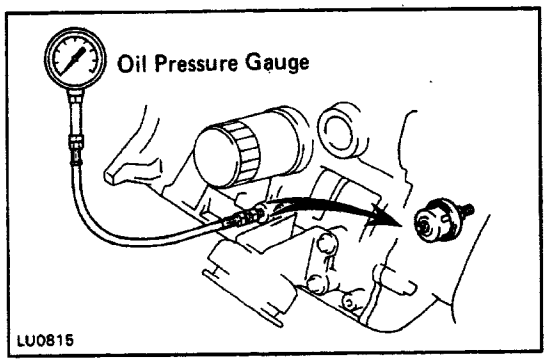

3. REMOVE OIL PRESSURE SENDER GAUGE

4. INSTALL OIL PRESSURE GAUGE

5. START ENGINE

Start the engine and warm it up to normal operating temperature.

6. MEASURE OIL PRESSURE

Oil pressure:

At idle

29 kPa (0.3 kgf/cm2, 4.3 psi) or more

At 3,000 rpm

245 – 490 We (2.5 – 5.0 kgf/cm2, 36 – 71 psi)

HINT: Check for oil leakage after reinstalling the oil pressure sender gauge.

OIL PUMP

COMPONENTS FOR REMOVAL AND INSTALLATION

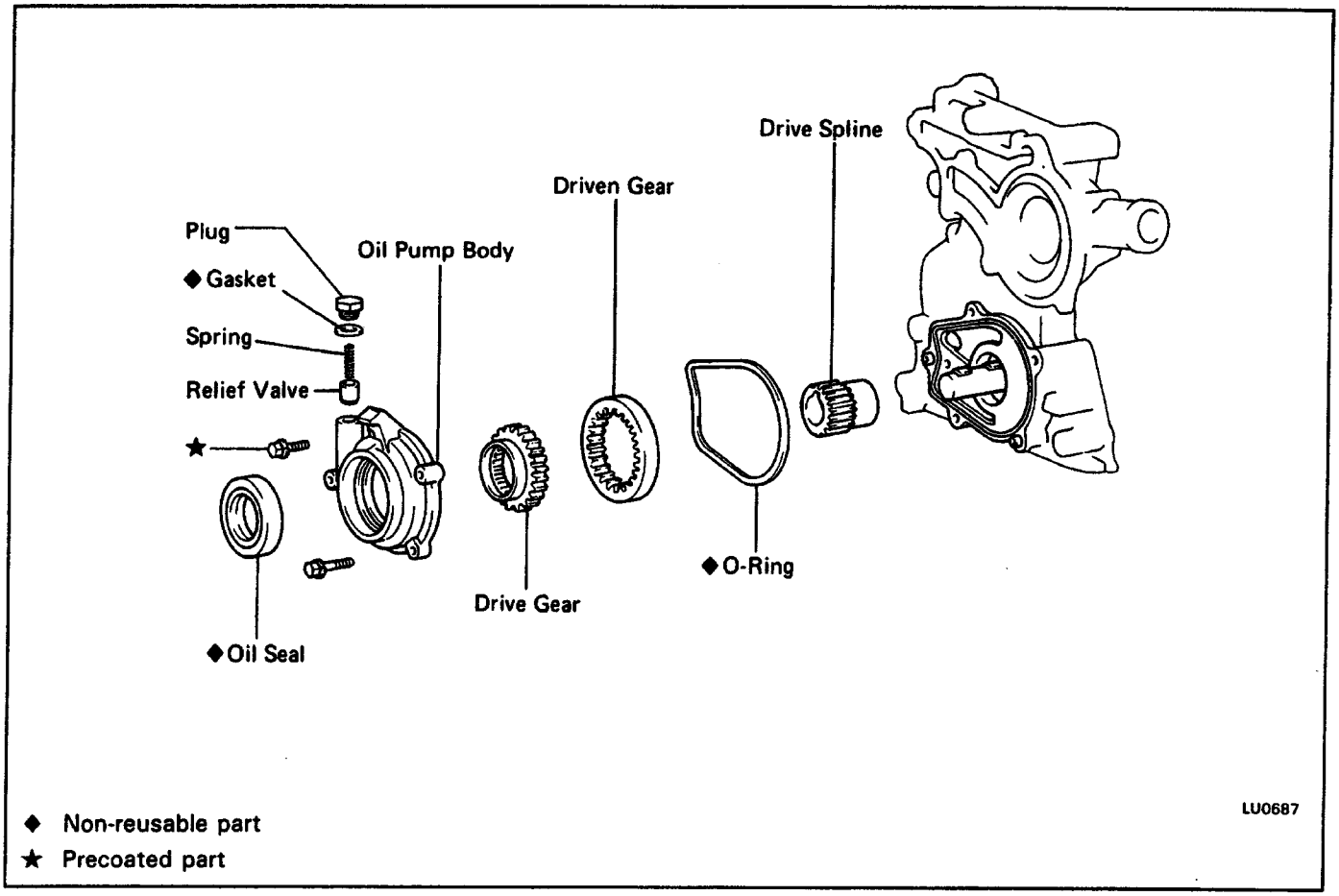

OIL PUMP REMOVAL

HINT: When repairing the oil pump, the oil pan and strainer should be removed and cleaned.

1. REMOVE OIL PAN
(See steps 3 and 4 in preparation of removal in timing chain in Engine Mechanical)
2. REMOVE OIL STRAINER
Remove the 4 bolts holding the oil strainer.
3. REMOVE DRIVE BELTS
4. REMOVE CRANKSHAFT PULLEY
(See steps 4 in timing chain removal in timing chain in Engine Mechanical)
5. w/ A/C:
REMOVE A/C COMPRESSOR AND BRACKET

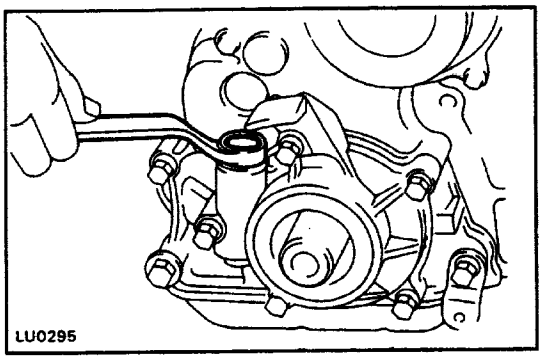

6. REMOVE OIL PUMP ASSEMBLY

(a) Loosen the oil pump relief valve plug.

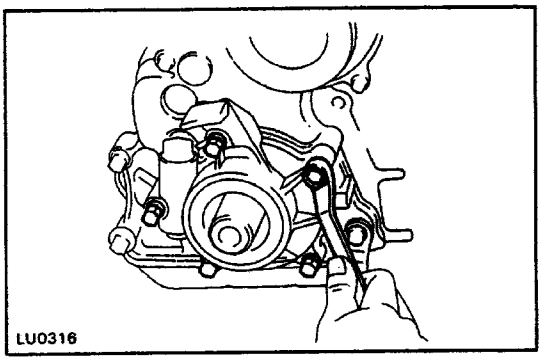

(b) Remove the 5 bolts, the oil pump assembly and O–ring.

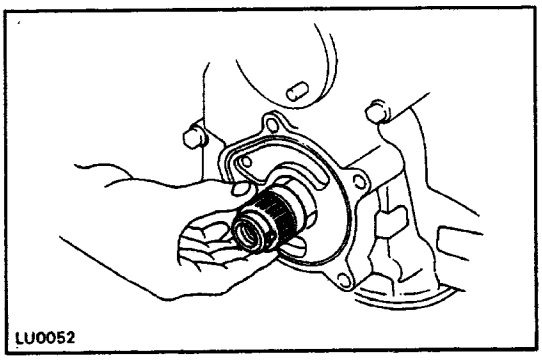

7. REMOVE OIL PUMP DRIVE SPLINE

HINT: If the oil pump drive spline cannot be removed by hand, use SST to remove the pump drive spline and crankshaft together.
(See step 10 in timing chain removal in timing chain in Engine Mechanical)
SST 09213–36020

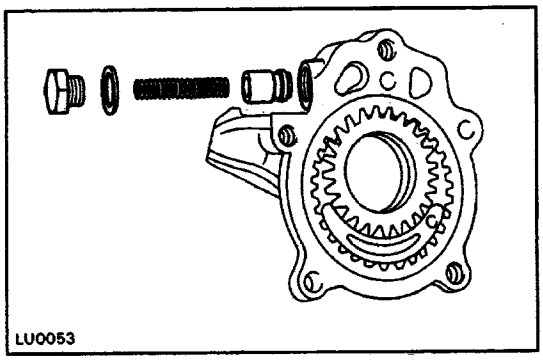

OIL PUMP DISASSEMBLY

1. REMOVE RELIEF VALVE

Unscrew the relief valve plug and gasket, and remove the spring and the relief valve.

2. REMOVE DRIVEN AND DRIVE GEARS

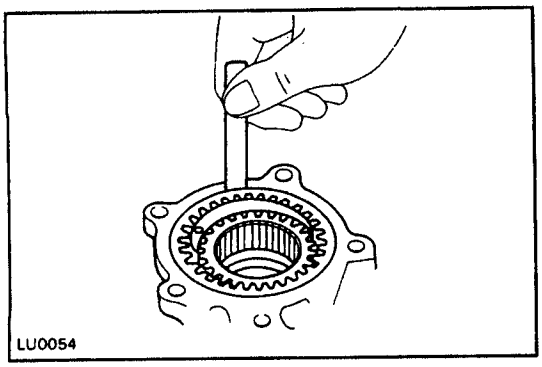

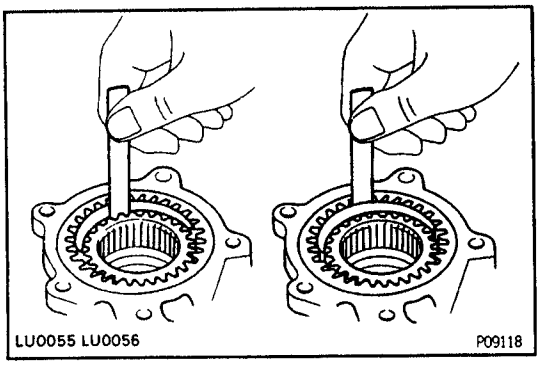

OIL PUMP INSPECTION

1. MEASURE BODY CLEARANCE

Using a thickness gauge, measure the clearance between the driven gear and body.

Standard clearance:

0.09 – 0.15 mm (0.0035 – 0.0059 in.)

Maximum clearance:

0.2 mm (0.008 in.)

If the clearance is greater than maximum, replace the gear and/or body.

2. MEASURE TIP CLEARANCE

Using a thickness gauge, measure the clearance between both of the gear tips and crescent.

Standard clearance:

Driven gear

0.15 – 0.21 mm (0.0059 – 0.0083 in.)

Drive gear

0.22 – 0.25 mm (0.0087 – 0.0098 in.)

Maximum clearance:

0.3 mm (0.012 in.)

If the clearance is greater than maximum, replace the gears and/or body.

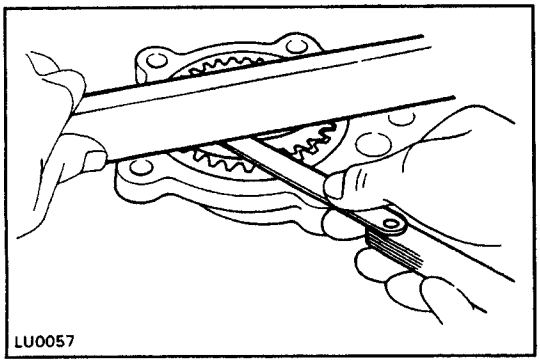

3. MEASURE SIDE CLEARANCE

Using a thickness gauge and flat block, measure thE side clearance as shown.

Standard clearance:

0.03 – 0.09 mm (0.0012 – 0.0035in.)

Maximum clearance:

0.15 mm (0.006 in.)

If the clearance is greater than maximum, replace the gears and/or body.

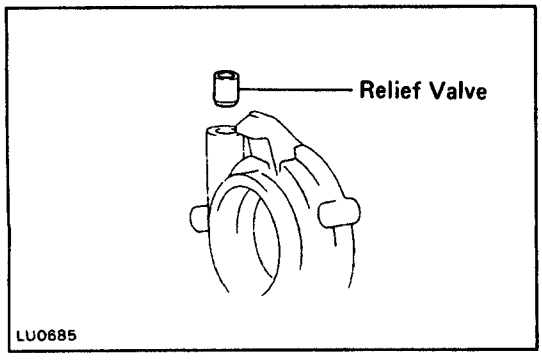

4. INSPECT RELIEF VALVE

Coat the valve piston with engine oil and check that i falls smoothly into the valve hole by its own weight. If the valve does not fall smoothly, replace the valve and/or oil pump assembly.

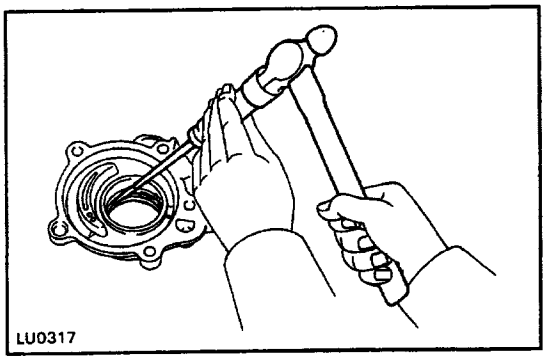

FRONT OIL SEAL REPLACEMENT

1. REMOVE OIL SEAL

(a) Remove the drive and driven gears.
(b) Using a screwdriver, remove the oil seal.

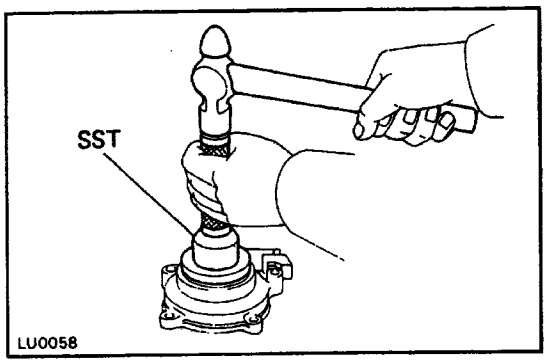

2. INSTALL OIL SEAL

(a) Apply MP grease to a new oil seal lip.
(b) Using SST, drive in the new oil seal.
SST 09223–50010

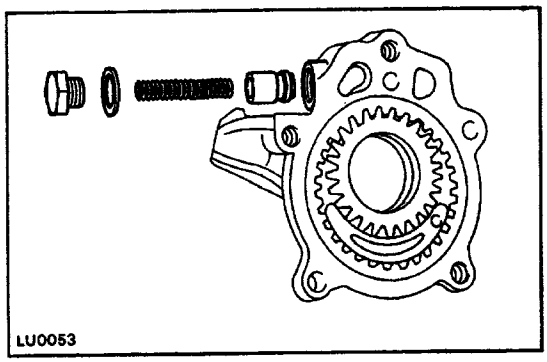

OIL PUMP ASSEMBLY

(See Components for Removal for installation)

(a) Install the relief valve and spring in the body, and screw on the relief valve plug with a new gasket.
(b) Insert the drive and driven gears into the pump body.

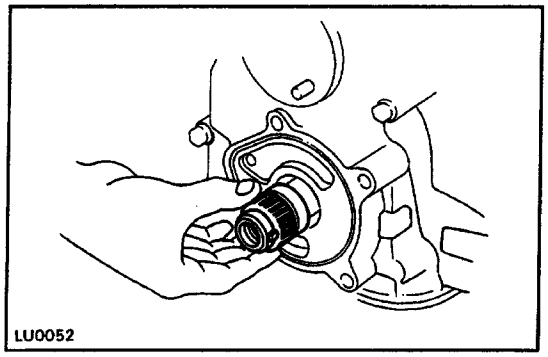

OIL PUMP INSTALLATION

(See Components for Removal and Installation)

1. INSTALL OIL PUMP DRIVE SPLINE AND O–RING

(a) Slide the pump drive spline onto the crankshaft.

HINT: If the oil pump drive spline cannot be installed by hand, use SST. (See page EG1–42)

(b) Place the 0–ring into the groove.

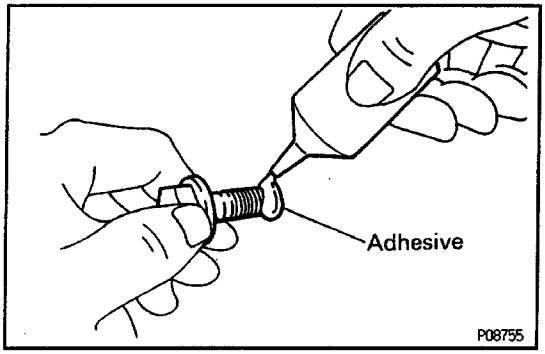

2. INSTALL OIL PUMP

(a) Clean the threads of the upper set bolt and timing chain cover bolt hole of any sealer, oil or foreign particles. Remove any oil with kerosene or gasoline.

(b) Apply sealant to 2 or 3 threads of the bolt end.

Adhesive:
Part No. 08833–O0070. THREE BOND 1324 or equivalent

HINT: This adhesive will not harden while exposed to air. It will act as a sealant or binding agent only when applied to threads, etc. and air is cut off.

(c) Torque the 5 bolts.

Torque:
Bolt (A): 25 N–m (250 kgf–cm, 18 ft–lbf)
Bolt (B): 19 N–m (195 kgf–cm, 14 ft–lbf)
Bolt (C): 13 N–m (130 kgf–cm. 9 ft–lbf)

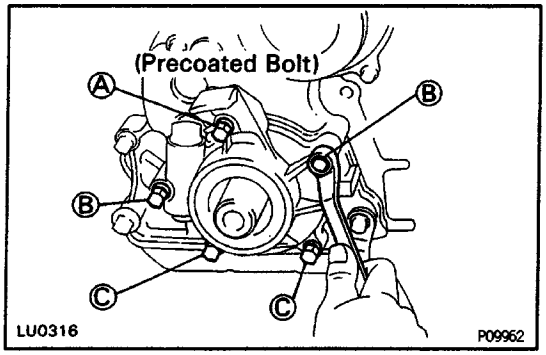

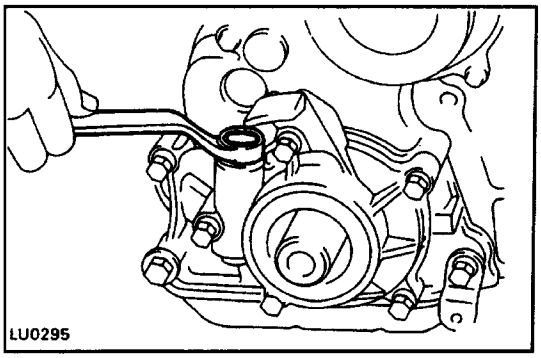

(d) Torque the relief valve plug.

Torque: 37 N–m (375 kgf–cm. 27 ft–lbf)

3. INSTALL CRANKSHAFT PULLEY
(See step 8 in timing chain installation in timing chain in Engine Mechanical)

4. INSTALL AND ADJUST DRIVE BELT
(See step 2 in maintenance operations in Maintenance)

5. INSTALL OIL STRAINER
(See step 2 in cylinder block assembly in cylinder block in Engine Mechanical)

6. INSTALL OIL PAN
(See step 13 in timing chain installation in timing chain in Engine. Mechanical)

LUBRICATION SYSTEM

DESCRIPTION

A fully pressurized, fully filtered lubrication system is used in this engine.

OPERATION

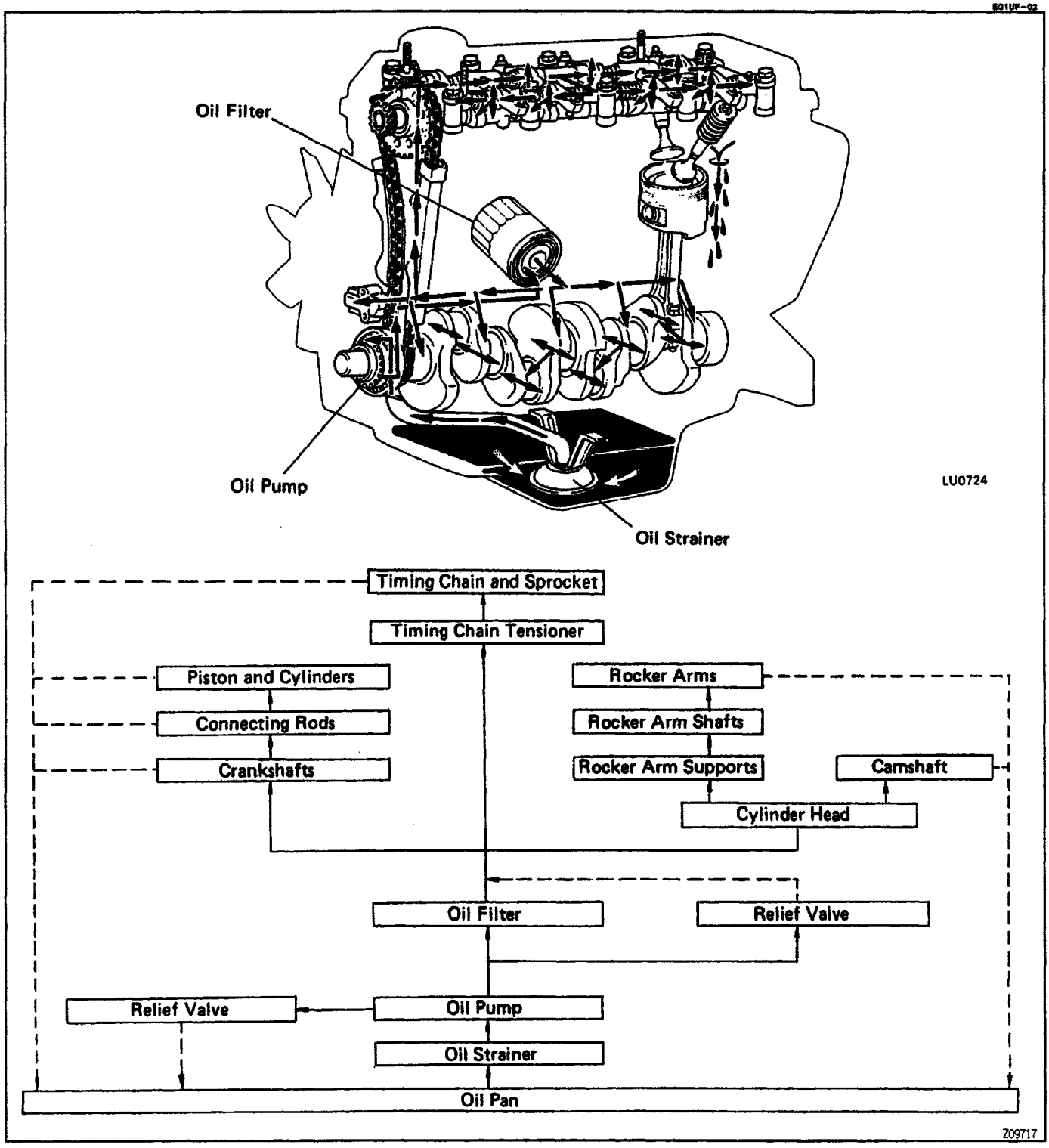

A pressure feeding lubrication system has been adopted to supply oil to the moving parts of this engine. The lubrication system consists of an oil pan, oil pump and oil filter, etc. The oil circuit is shown in the illustration on the previous page. Oil from the oil pan is pumped up by the oil pump. After it passes through the oil filter, it is fed through the various oil holes in the crankshaft and cylinder block.. After passing through the cylinder block and performing its lubricating function, the oil is returned by gravity to the oil pan. A dipstick on the side of the oil pump body is provided to check the oil level.

OIL PUMP

The oil pumps up oil from the oil pan and sends it under pressure to the various parts of the engine. An oil strainer is mounted in front of the inlet to the oil pump to remove impurities. The oil pump itself is an internal gear pump, which uses a drive gear and driven gear inside the pump body. When the drive gear rotates, the–driven gear rotates in the same direction. When both gears rotate, the space between the two gears changes. Oil is drawn in when this space widens, and is discharged when the space becomes narrow.

OIL PRESSURE REGULATOR (RELIEF VALVE)

At high engine speeds, the oil pump supplies more oil to each part than is necessary. For this reason, an oil pressure regulator which works to prevent an oversupply of oil is installed on the oil pump. During normal oil supply, a coil spring and valve keep the bypass closed, but when too much oil is being supplied, the pressures become extremely high, overpowering the force of the spring and opening the valve. This allows the excess oil to flow through the relief valve and return to the oil pan.

OIL FILTER

The oil filter is a full flow type with a paper filter element and built–in relief valve. Particles of metal from wear, airborne dirt, carbon and other impurities can get in the oil during use and could cause accelerated wear or seizing if allowed to circulate through the engine. The oil filter, integrated into the oil line, removes these impurities as the oil passes through it. The filter is mounted outside the engine to simplify replacement of the filter element. A relief valve is also included ahead of the filter element to relieve the high oil pressure in case the filter element becomes clogged with impurities. The relief valve opens when the oil pressure overpowers the force of the spring. Oil passing through the relief valve bypasses the oil filter and flows directly into the main oil hole in the engine.

PREPARATION

SST (SPECIAL SERVICE TOOLS)

	09032–00100 Oil Pan Seal Cutter	
	09223–50010 Crankshaft Front oil Seal Replacer	Crankshaft front oil seal
	09228–07500 Oil Filter Wrench	
	09950–40010 Puller B Set	

RECOMMENDED TOOLS

	09200–00010 Engine Adjust Kit.	
	09905–00013 Snap Ring Pliers.	

EQUIPMENT

Oil pressure gauge	
Torque wrench	

LUBRICANT

Item	Capacity	Classification
Engine oil Dry fill Drain and refill w/o Oil filter change w/ Oil filter change	**4.8 liters (5.1 US qts, 4.2 Imp. qts)** **3.8 liters (4.0 US qts, 3.3 Imp. qts)** **4.3 liters (4.5 US qts, 3.8 Imp. qts)**	AN grade SH, Energy – Conserving II or ILSAC multigrade and recommended viscosity oil.

SSM (SPECIAL SERVICE MATERIALS)

08826–00080	Seal Packing Black or equivalent (FIPG)	Oil pan

SERVICE SPECIFICATIONS

SERVICE DATA

Oil pressure	At idle (normal operating temperature) At 3,000 rpm (normal operating temperature)		**29 kPa (0.3 kgf/cm², 4.3 psi) or more** **245 – 490 kPa (2.5 – 5.0 kgf/cm², 36 – 71 psi)**
Oil pump	Body clearance	**STD**	**0.09 – 0.15 mm (0.0035 – 0.0059 in.)**
		Maximum	**0.20 mm (0.008 in.)**
	Tip clearance Driven gear to crescent	**STD**	**0.15 – 0.21 mm (0.0059 – 0.0083 in.)**
		Maximum	**0.30 mm (0.012 in.)**
	Drive gear to crescent	**STD**	**0.22 – 0.25 mm (0.0087 – 0.0098 in.)**
		Maximum	**0.30 mm (0.0012 in.)**
	Side clearance	**STD**	**0.03 – 0.09 mm (0.0012 – 0.0035 in.)**
		Maximum	**0.15 mm (0.0059 in.)**

TORQUE SPECIFICATIONS

Part tightened	N·m	kgf·cm	ft·lbf
Cylinder block x Rear oil seal retainer	**18**	**180**	**13**
Cylinder block x Oil cooler relief valve	**69**	**700**	**51**
Cylinder block x Oil strainer	**13**	**130**	**9**
Cylinder block x Oil pan	**13**	**130**	**9**
Oil pan x Drain plug	**25**	**250**	**18**

AUXILIARY AIR VALVE

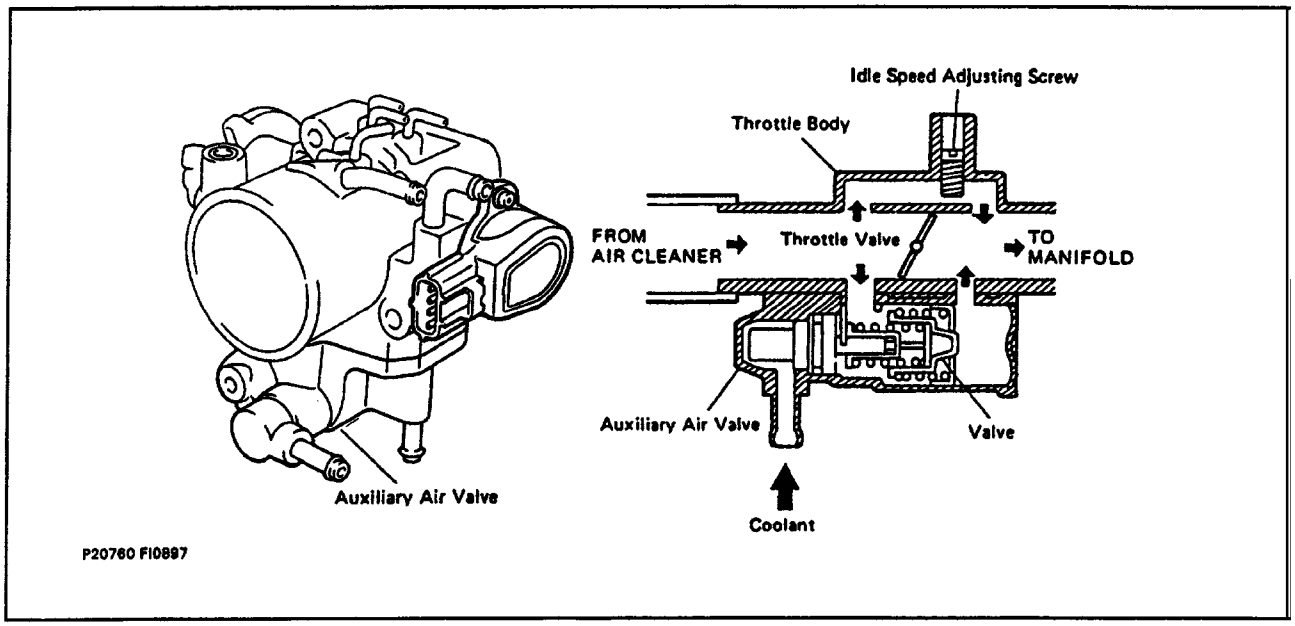

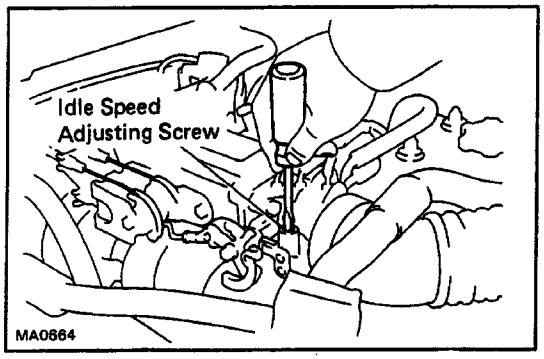

ON–VEHICLE INSPECTION

CHECK OPERATION OF AUXILIARY AIR VALVE

Check the engine rpm by fully screwing in the idle speed adjusting screw.

At low temp. (Coolant temp.: below 80˚C/176˚F)

- When the idle speed adjusting screw is in, the engine rpm should drop.

After warm–up

- When the idle speed adjusting screw is in, the engine rpm should drop below idle speed stop.

AUXILIARY AIR VALVE REMOVAL

1. REMOVE THROTTLE BODY
(See throttle body removal)
2. REMOVE AUXILIARY AIR VALVE
(See step 2 in throttle body disassembly)

AUXILIARY AIR VALVE INSTALLATION

1. INSTALL AUXILIARY AIR VALVE
(See step 2 in throttle body assembly)
2. INSTALL THROTTLE BODY
(See throttle body installation)

CIRCUIT OPENING RELAY

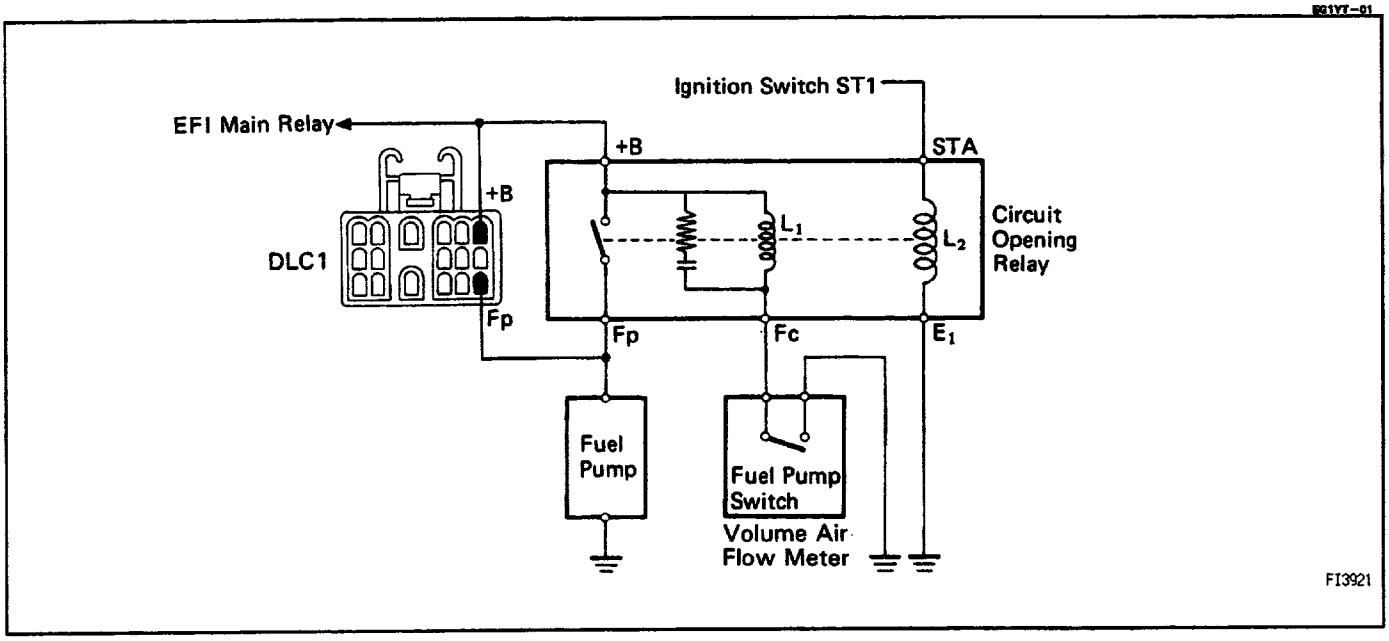

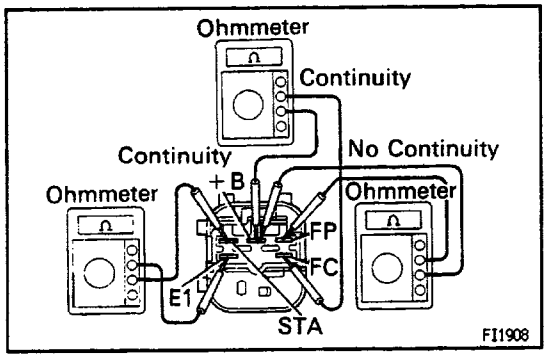

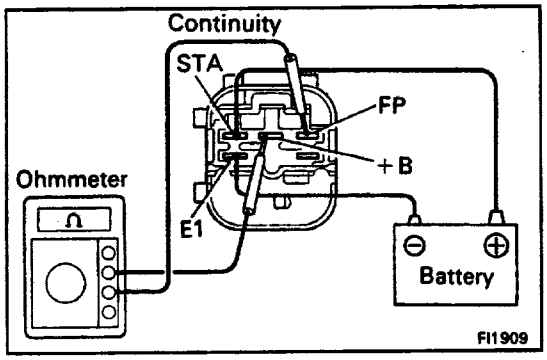

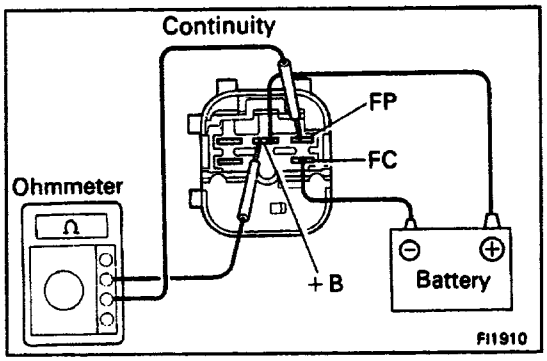

CIRCUIT OPENING RELAY INSPECTION

1. INSPECT RELAY CONTINUITY

(a) Using an ohmmeter, check that there is continuity between terminals STA and E,.

(b) Check that there is no continuity between terminals B and FC.

(c) Check that there is no continuity between terminals B and FP.

If continuity is not as specified, replace the relay.

2. INSPECT RELAY OPERATION

(a) Apply battery voltage across terminals STA and E,.

(b) Using an ohmmeter, check that there is continuity between terminals B and FP.

(c) Apply battery voltage across terminals B and FC.

(d) Check that there is continuity between terminals B and FP.

If operation is not as specified, replace the relay.

COLD START INJECTOR TIME SWITCH

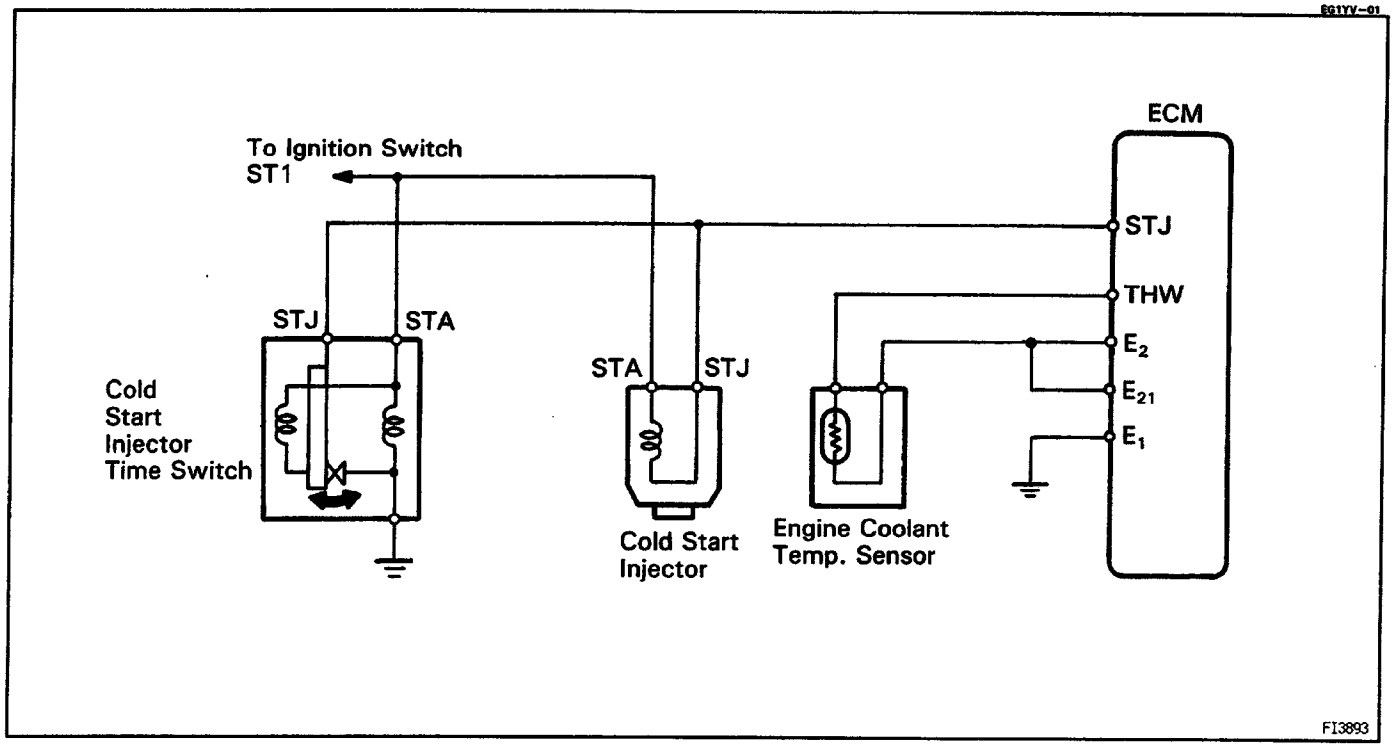

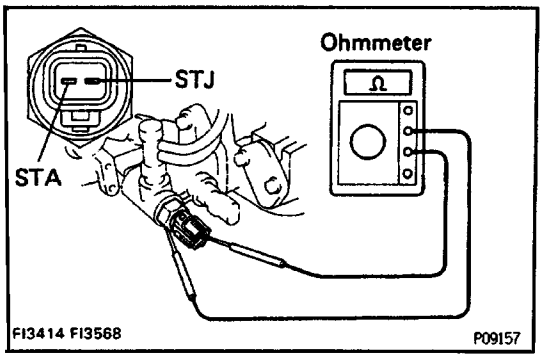

START INJECTOR TIME SWITCH INSPECTION

MEASURE RESISTANCE OF START INJECTOR TIME SWITCH

(a) Disconnect the connector.

(b) Using an ohmmeter, measure the resistance between terminals.

Between terminals	Resistance (Ω)	Coolant temperature
STA – STJ	30 – 50	below 10°C (50°F)
	65 – 90	above 30°C (86°F)
STA – Ground	30 – 90	–

COLD START INJECTOR

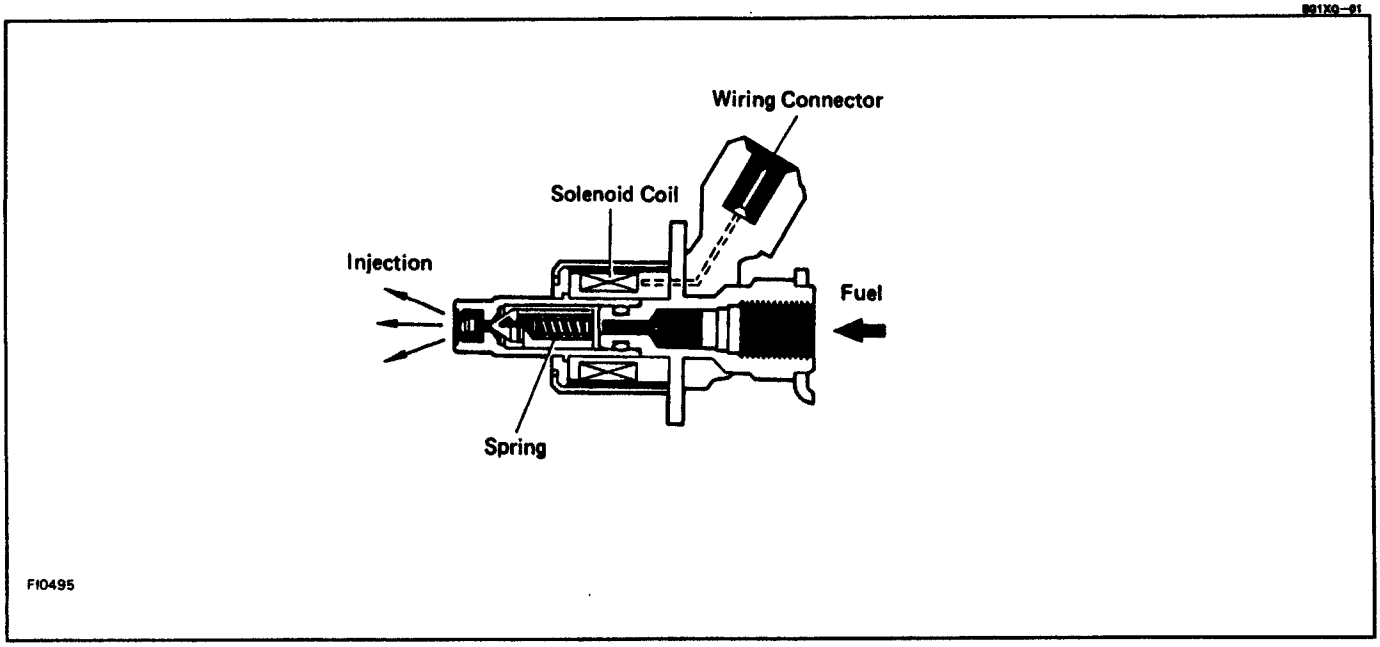

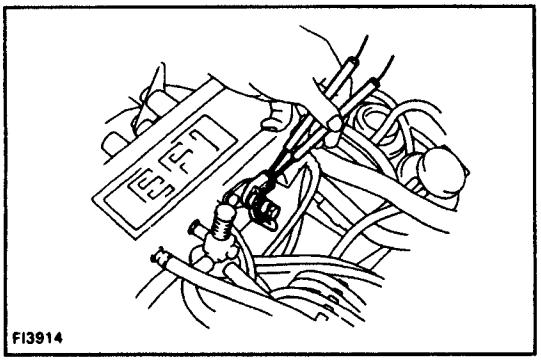

ON–VEHICLE INSPECTION

MEASURE RESISTANCE OF COLD START INJECTOR

(a) Disconnect the cold start injector connector.
(b) Using ohmmeter, check the resistance of the injector.
Resistance: 2 –4Ω
(c) Connect the cold start injector connector.

COLD START INJECTOR REMOVAL

1. DISCONNECT NEGATIVE TERMINAL CABLE FROM BATTERY

2. DISCONNECT COLD START INJECTOR CONNECTOR

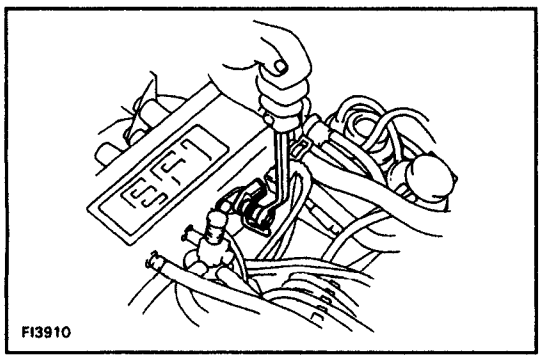

3. REMOVE COLD START INJECTOR

(a) Put a suitable container or shop towel under the cold star injector pipe.
(b) Remove the union bolts and 4 gaskets, and remove the cold start injector pipe.
HINT: Slowly loosen the union bolt.
(c) Remove the 2 bolts and cold start injector with the gasket.

COLD START INJECTOR INSPECTION

CHECK INJECTION .OF COLD START INJECTOR

HINT: The engine should be cold.

(a) Remove the cold start injector.

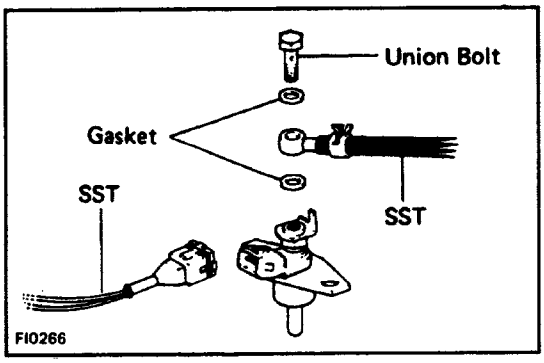

(b) Install a gasket, SST (2 unions), another gasket and 2 union bolts to the delivery pipe and injector.

(c) Connect the SST (hose) to each union.
SST 09268–41045 (092368–41080)

(d) Connect the SST (wire) to the injector.
SST 09842–30050

CAUTION: Position the injector as far away from the battery as possible.

(e) Put a container under the injector.

(f) Turn the ignition switch ON.

HINT: Do not start the engine.

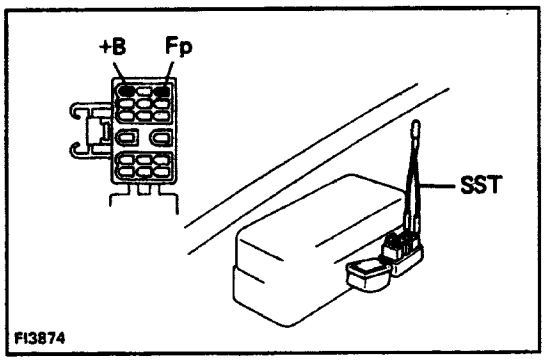

(g) Using SST, connect terminals Fp and + B of the DLC1.
SST 09843–18020

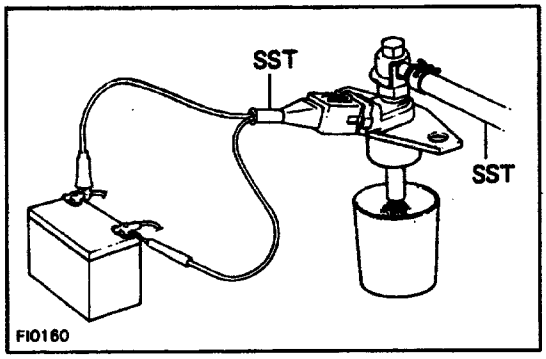

(h) Connect the test probes of the SST to the battery and check that the fuel injection is as shown.
SST 09842 – 30050

NOTICE: DO this check within the shortest possible time.

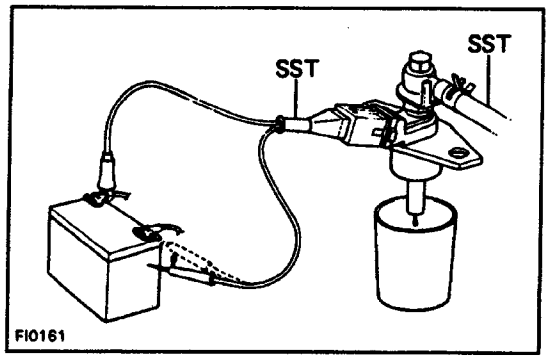

(i) Disconnect the test probes from the battery and check fuel leakage from the injector.
Fuel drop: One drop or less per minute

(j) After checking, remove SST and restore these parts to their original conditions.

- DLC1
- Ignition switch
- Cold start injector
- Injector wiring

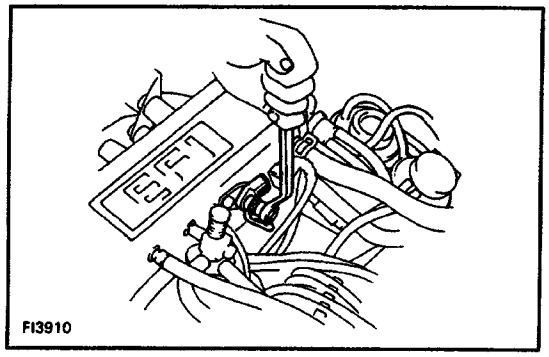

COLD START INJECTOR INSTALLATION

1. INSTALL COLD START INJECTOR

(a) Using new gasket, install the cold start injector with the 2 bolts.

Torque: 7.8 N–m (80 kgf–cm, 69in.–lbf)

(b) Install the fuel pipe between the cold start injector and fuel delivery pipe with new gaskets.

Torque: 19 N–m (195 kgf–cm, 14 ft–lbf)

2. CONNECT COLD START INJECTOR CONNECTOR

3. CONNECT NEGATIVE TERMINAL CABLE TO BATTERY

4. CHECK FOR FUEL LEAKAGE

MFI SYSTEM

DESCRIPTION

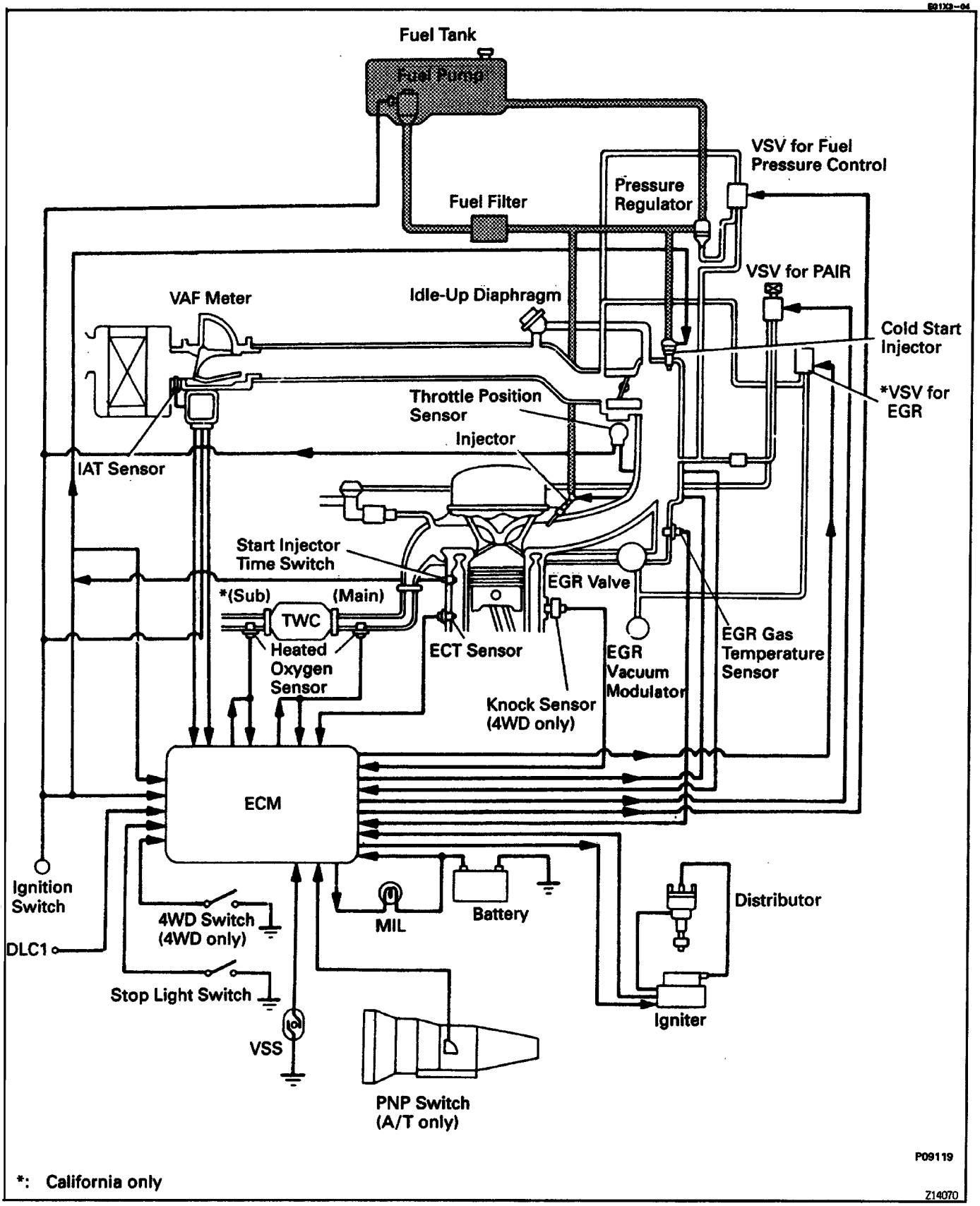

The MFI system is composed of three basic subsystems: Fuel, Air Induction and Electronic Control Systems.

FUEL SYSTEM

An electric fuel pump supplies sufficient fuel, under a constant pressure, to the MFI injectors.
In accordance with signals from the ECM, these injectors inject the most appropriate quantity of fuel for the engine condition into the intake manifold.
Each injector injects, at the same time, one half of the fuel required for ideal combustion with each engine revolution.

AIR INDUCTION SYSTEM

The air induction system provides just the right amount of air for the engine operating condition.

ELECTRONIC CONTROL SYSTEM

The 22R–E engine is equipped with a Toyota Computer Controlled System (TCCS) which centrally controls the MFI, ESA, A/T (4WD), diagnosis systems, etc. by means of an Engine Control Module (ECM, formerly the MFI computer) employing a microcomputer.
By means of the ECM, the TCCS controls the following functions are controlled:

1. Multiport Fuel Injection (MFI)

The receives signals from various sensors indicating changing engine operating conditions such as:
Intake air volume
Intake air temperature
Coolant temperature
Engine rpm
Acceleration/deceleration
Exhaust oxygen content etc.
These signals are utilized by the ECM to determine the injection duration necessary for an optimum air–fuel ratio.

2. Electronic Spark Advance (ESA)

The ECM is programmed with data for optimum ignition timing under all operating conditions. By using sensors which monitor various engine functions (RPM, intake air volume, engine coolant temperature etc.), the microcomputer (ECM) triggers the spark at precisely the right instant.

3. Diagnosis Function

When the ECM detects malfunction or abnormalities in the sensor network, it lights the Malfunction Indicator Lamp in the combination meter. At the same time, the trouble is identified and a diagnostic trouble code is recorded by the ECM. The diagnostic trouble code can be read by the number of blinks of the Malfunction Indicator Lamp when terminals TE1 and E1 are connected,
The diagnostic trouble codes are explained on pages EG1–117,118.

4. Fail–Safe Function

In the event of a sensor malfunction, a backup circuit will take over to provide minimal driveability and the malfunction indicator lamp will light up.

DIAGNOSIS SYSTEM

DESCRIPTION

The ECM contains a built–in self–diagnosis system which detects troubles within the engine signal net–work and flashes the Malfunction Indicator Lamp in the combination meter.
By analyzing various signals shown in the table (See pages EG1–117,118) the detects system malfunctions which are related to the various operating parameter sen-sors or to the actuator.
The ECM stores the failure code associated with the de-tected failure until the diagnosis system is cleared by re-moving the EFI fuse with the ignition switch oft.
The Malfunction Indicator Lamp in the combination meter informs the driver that a malfunction has been detected. The light goes automatically when the malfunction has been corrected.

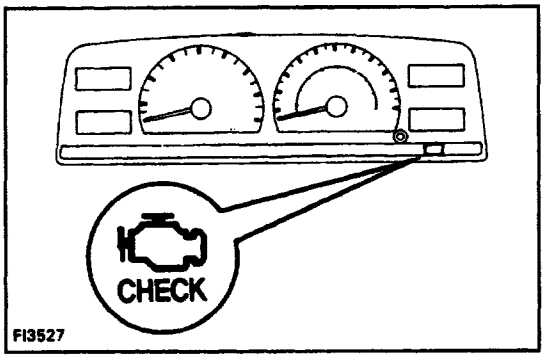

MALFUNCTION INDICATOR LAMP

1. The Malfunction Indicator Lamp will come on when the igni-tion switch is placed at ON and the engine is not running.
2. When the engine is started, the Malfunction Indicator Lamp should go off.
   If the light remains on, the diagnosis system has detected a malfunction m abnormality in the system.

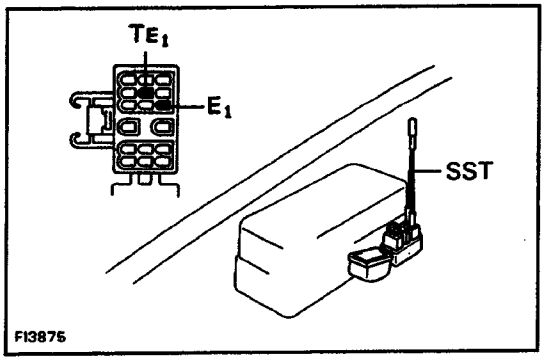

DIAGNOSTIC TROUBLE CODES OUTPUT

To obtain an output of diagnostic trouble codes, proceed as follows:

1. Initial conditions
   (a) Battery voltage 11 volts or more.
   (b) Throttle valve fully closed (throttle position sensor IDL points closed).
   (c) Transmission in neutral range.
   (d) Accessories switched OFF.
   (e) Engine at normal operating temperature.
2. Turn the ignition switch ON. Do not start the engine.
   Using SST, connect terminals TE, and E, of the DLC1.
   SST 09843–18020

HINT: The DLC1 is located near the No. 2 relay block.

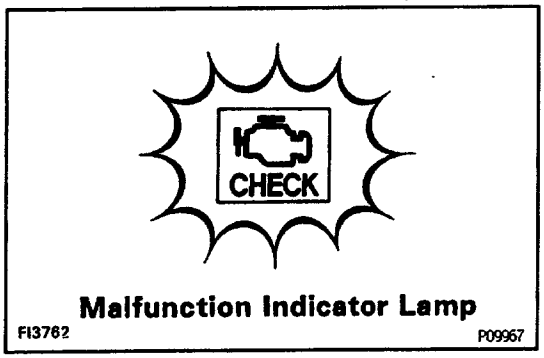

4. Read the diagnostic trouble code as indicated by the number of flashes of the Malfunction Indicator Lamp.
   Diagnostic trouble code (See pages EG1–117,118)

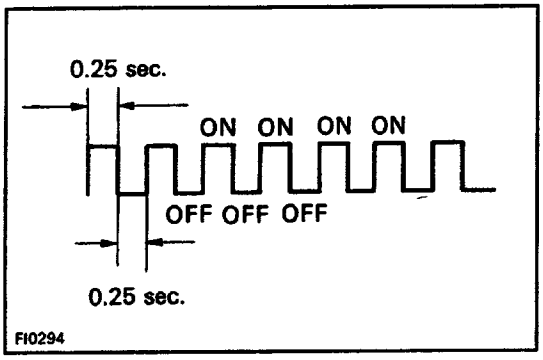

(a) Normal System Operation

- The lamp will blink 2 times per second.

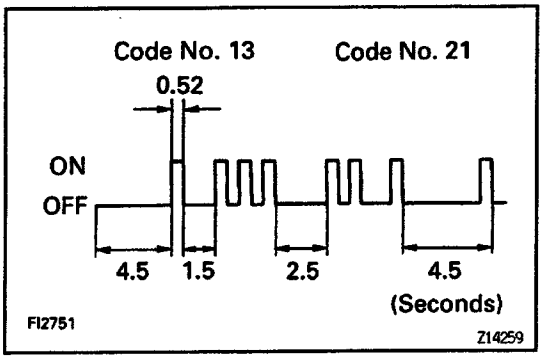

(b) Malfunction Code Indication

- The lamp will blink a number of times equal to the malfunction code with pauses as follows:

1. Between the first digit and second digit, 1.5 seconds.
2. Between code and code, 2.5 seconds.
3. Between all malfunction codes, 4.5 seconds.

The diagnostic trouble code series will be repeated as long as the DLC1 terminals TE1 and E1 are connected.

HINT: In the event of a number of trouble codes, indication will begin from the small value and continue to the larger in order.

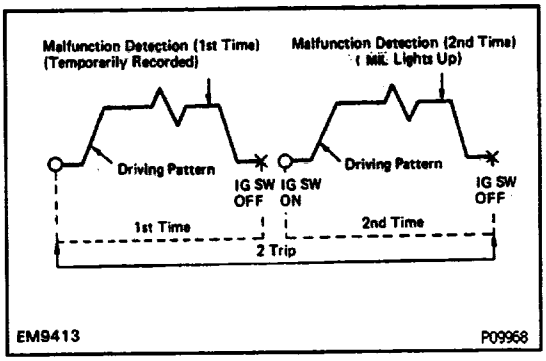

(c) 2 trip detection logic:

The diagnostic trouble codes 21, 25, 26, 27 and 71 use ‘2 trip detection logic”. With this logic, when. a logic malfunction is first detected, the malfunction is temporarily stored in the ECM memory. If the same case is detected again during the second drive test, this second detection causes the Malfunction Indicator Lamp to light up.

The 2 trip repeats the same mode a 2nd time. (However, the IG SW must be turned OFF between the 1st time and 2nd time).

5. After the diagnostic check, remove SST.
SST 09843–18020

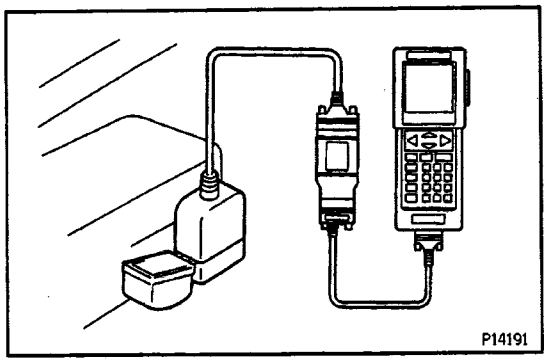

DIAGNOSTIC TROUBLE CODE CHECK USING TOYOTA HAND–HELD TESTER

1. Hookup the TOYOTA hand–held tester to the DLC1.
2. Read the diagnostic trouble codes by following the prompts on the tester screen.

Please refer to the TOYOTA hand – held tester operator’s manual for further details.

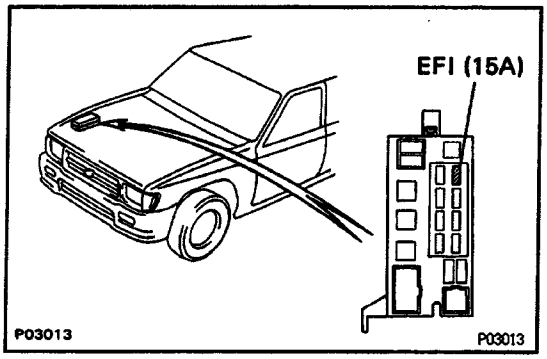

DIAGNOSTIC TROUBLE CODES CANCELLATION

1. After repair of the trouble area, the diagnostic trouble code retained in memory by the ECM must be cance–lled out by removing the EFI fuse (1 5A) for 30 seconds or more, depending on ambient temperature (the lower the temperature, the longer the fuse must be left out) with the ignition switch off.

HINT:

- Cancellation can also be done by removing the negative (–) terminal cable from the battery, but in this case other memory systems (radio ETR, etc.) will also be cancelled out.
- If the diagnostic trouble code is not cancelled out, it will be retained by the ECM and appear along with a new code in the event of future trouble.
- If it is necessary to work on engine components requiring re-moval of the negative (–) terminal cable from the battery, check must first be made to see if a diagnostic trouble code has been recorded.

2. After cancellation, road test the vehicle, if necessary, confirm that a ”normal” code is now read on the Malfunction Indicator Lamp.
   If the same diagnostic trouble code appears, it indicates that the trouble area has not been repaired thoroughly.

DIAGNOSIS INDICATION

(1) When 2 or more codes are indicated, the lowest number (code) will appear first.

(2) All detected diagnostic trouble codes, except for code No. 51 and No. 53, will be retained in memory by the ECM from the time of detection until cancelled out.

(3) Once the malfunction is cleared, the Malfunction Indi-cator Lamp on the instrument panel will go off but the diagnostic trouble code (s) remain stored in ECM memory (except for code 51 and 53).

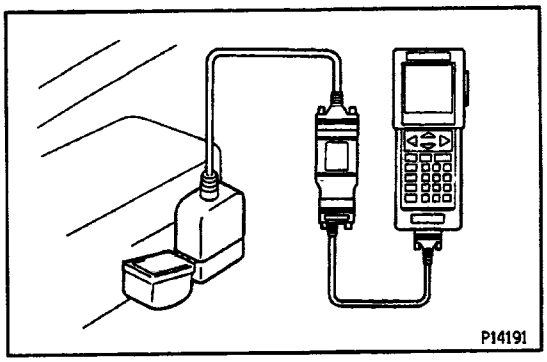

ECM DATA MONITOR USING TOYOTA HAND–HELD TESTER

1. Hookup the TOYOTA hand–held tester to the DLC1.
2. Monitor the ECM data by following the prompts on the tester screen.

HINT: TOYOTA hand–held tester has a ”Snapshot” function which records the monitored data.
Please refer to the TOYOTA hand–held tester operator’s manual for further details.

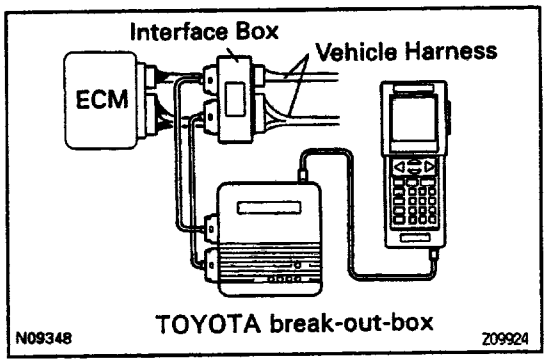

ECM TERMINAL VALUES MEASUREMENT USING TOYOTA BREAK–OUT–BOX AND TOYOTA HAND–HELD TESTER

1. Hook up the TOYOTA break–out–box and TOYOTA hand–held tester to the vehicle.
2. Read the ECM input/output values by following the prompts on the tester screen.

HINT: TOYOTA hand–held tester has a ”Snapshot’ function. This records the measured values and is effective in the diagnosis of intermittent problems.
Please refer to the TOYOTA hand – held tester/ TOYOTA break–out–box operator’s manual for further details.

DIAGNOSTIC TROUBLE CODES

HINT:

- If a malfunction is detected during the diagnostic trouble code check, refer to the circuit indicated in the table, and turn to the corresponding page.
- Your readings may vary from the parameters listed in the table, depending on the instruments used.

DTC No.	Number of blinks Malfunction Indicator Lamp	System	MIL	Diagnosis	Trouble Area	•2 Memory	See Page
–	 FI1401	Normal	–	No trouble code is recorded.	———	–	–
12	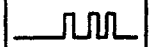 FI1389	RPM Signal	ON	No NE signal is input to the ECM for 2 secs. or more after STA turns ON.	• Open or short in NE circuit • Distributor • Open or short in STA circuit • ECM	O	IG–3 EG1–135 EG1–153
13	 FI1390	RPM Signal	ON	NE signal is not input to ECM for 300 nsec. or more when engine speed is 1,500 rpm or more.	• Open or short in NE circuit • Distributor • ECM	O	IG–3
14	 FI1391	Ignition Signal	ON	IGF signal from igniter is not input to ECM for 4 consecutive ignitions.	• Open or short in IGF or IGT circuit kom ignite • to ECM • Ignite • ECM	O	EG1–137 EG1–155
21	FI1400	Heated Oxygen Sensor Signal	ON	(1) Open or short in heater circuit of heated oxygen sensor for 500 msec. or more. (HT) (2) At normal driving speed (below 60 mph and engine speed is above 1,700 rpm), amplitude of heated oxygen sensor signal (OX1) is reduced to between 0.35 – 0.70 continuously for 60 secs. or more. *4 2 trip detection logic– (2)	• Open or short in heater circuit of main oxygen sensor • Heated oxygen sensor heater • ECM • Open or short in main oxygen sensor circuit • Heated oxygen sensor • ECM	O	EG1–141 EG1–155
22	 FI1392	Engine Coolant Temp. Sensor Signal	ON	Open or short in engine coolant temp. sensor circuit for 500 msec. or more. (TNW)	• Open or short in engine coolant temp. sensor circuit • Engine coolant temp. sensor • ECM	O	EG1–134 EG1–152
24	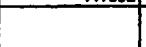 FI1611	Intake Air Temp. Sensor Signal	ON	Open or short in intake air temp. sensor circuit for 50 msec. or more. (THA)	• Open or short in intake air temp. circuit • Intake air temp. sensor • ECM	O	EG1–132 EG1–150
25	FI2562	Air–Fuel Ratio Leon Mal–function	ON	(1) Oxygen sensor output is less than 0.45 V for at least 90 secs. when oxygen sensor is warmed up (racing at 2.000 rpm). –Only for code 25. .4 (2) When the air–fuel compensation value fluctuates more than 2096 from the ECM set range within 60 sacs. period while driving et 15kn/h (9 mph) or snore at coolant temp. of 70'C (I58°) or above. *4 2 trip detection logic– (1) and (2)	• Engine ground bolt loose • Open in El circuit • Open in injector circuit • Fuel line pressure (Injector blockage, etc.) • Open or short in heated oxy-gen sensor circuit • Heated oxygen sensor • Ignition system • Engine coolant temp. sen-sor • Volume sir flow meter (Air intake)' • ECM	O	EG1–139 EG1–141 EG1–157 EG1–159
26	 FI2563	Air–Fuel Ratio Rich Malfunctior	ON		• Engine ground bolt loose • Open in E1 circuit • Short in injector circuit • Fuel line pressure (injector leakage, etc.) ' • Open or short in cold start injector circuit • Cold start injector • Open or short in heated ox-ygen sensor circuit • Heated oxygen sensor • Engine coolant temp. sen-sor • Volume air flow meter • Compression pressure • ECM	O	

DIAGNOSTIC TROUBLE CODES (Cont'd)

OTC No.	Number of blinks Malfunction Indicator Lamp	System	MIL	Diagnosis	Trouble Area	.t Memory	See Page
*5 27	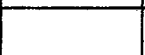 FI3294	Sub Heated Oxygen Sensor Signal	ON	(1) When sub–oxygen sensor is warmed up and full acceleration continued for 2 seconds. output of main oxygen sensor is 0.45V or more (rich) and output of sub–oxygen sensor is 0.45V or less (loan). (OX2) (2) Open or short detected continuously for 500 nrrsec. or more in sub–oxygen sensor heater circuit 4 2 trip detection logic–(I) end (2)	• Short a open in sub–heated oxygen sensor circuit • Sub–heated oxygen sensor • Open or short in sub–heated oxygen sensor heater • ECM	O	EG1–141 EG1–159
31	 FI1394	**Volume** Air Flow Meter Signal	ON	Open or short detected continuously for 500 msec. or more in volume sir flow motor circuit • Open – VC or E2 • Short – VC – E2 or VS – VC	• Open or short in volume air flow motor circuit • Volume air flow meter 9 ECM	O	EG1–132 EG1–150
41	 FI1396	Throttle Position Sensor Signal	ON	Open or short detected in throttle position sensor signal (VTA) for 500 msec. or more.	• Open or short in throttle position sensor circuit • Throttle position sensor • ECM	O	EG1–131 EG1–149
42	 FI1397	Vehicle Speed Sensor Signal	OFF	SPD signal is not input to the ECM for at least 8 seconds during high load driving with engine speed between 2,200 rpm and 5,000 rpm.	• Open or short in vehicle speed sensor circuit • Vehicle speed sensor • ECM	O	–
43	 FI1398	Starter Signal	OFF	Starter signal (STA) is not input to ECM even once until engine reaches 800 rpm or more when cranking.	• Open a short in stoner signal circuit • Open or short in tG SW or main relsy circuit • ECM	O	EG1–135 EG1–153
52	 FI1618	Knock Sensor Signal	ON	With engine speed 2.000 rpm or more signal from knock sensor is not input to ECM for 25 revolution. (KNK)	• Open or short in knock sensor circuit • Knock sensor (looseness. etc.) • ECM	O	–
53	 FI1619	Knock Control Signal	ON	The engine control computer (for knock control) malfunction is detected.	• ECM	x	–
71	 FI2622	EGR System Mal–function	ON	With the coolant temp. at 65°C (149°) or more, 50 seconds from start of EG R operation. The EGR gas temp. is less than 70°C (158°F) and the EGR gas temp. has risen less than 3'C during the 50 seconds. '4 2 trip detection logic	• Open in EGR gas temp. sensa circuit • Open in VSV circuit for EGR • EGR vacuum hose disconnected, valve stuck • Cologged in EGR gas passage • ECM	O	EG1–143 EG1–161
51	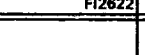 FI1399	Switch Condition Signal	OFF	Displayed when IDL contact OFF or shift position in 'R'. "D", '2', or '1' ranges with the check terminals E1 and TEI connected.	• Throttle position sensor IDL circuit • PNP switch circuit • Accelerator pedal, cable • ECM	x	EG1–130 EG1–148

REMARKS
*1: "ON" displayed in the diagnosis mode column indicates that the Malfunction Indicator Lamp is lighted up when a malfunction is detected,
"OFF" indicates that the MIL does not light up during malfunction diagnosis, even if a malfunction is detected.
*2: "O" in the memory column indicates that a diagnostic code is recorded in the ECM memory when a malfunction occurs. "x" indicates that a diagnostic code is not recorded in the ECM memory even if a malfunction occurs. Accordingly, output of diagnostics results is performed with the IG SW ON.
*4: "2 trip detection logic" (See page EG1–114)
*5: Only for California specification vehicles.

DIAGNOSTIC TROUBLE CODE DETECTION DRIVING PATTERN (Cont'd)

Purpose of the driving pattern.

(a) To simulate diagnostic trouble code detecting condition after diagnostic trouble code is recorded.

(b) To check that the malfunction is corrected when the repair is completed confirming that diagnostic trouble code is no longer detected.

DTC	21	Heated Oxygen Sensor Circuit

Malfunction: Heated Oxygen Sensor Deterioration

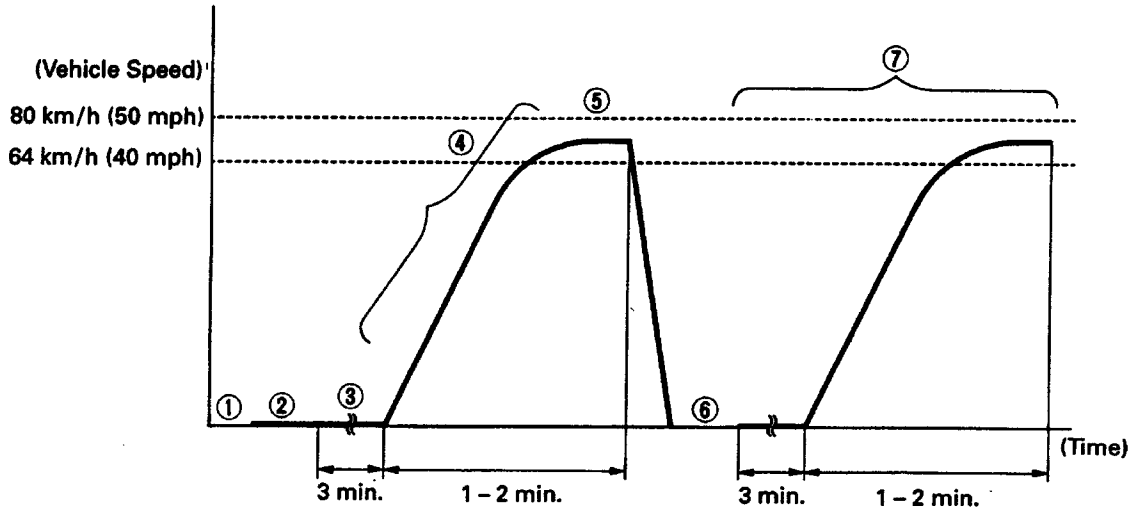

P02539

(1) Disconnect the fuse EFI (15 Ay for 10 sec. or more, with IG switched OFF

(2) Start the engine and warm it up with all accessories switched OFF.

(3) Idle the engine for 3 min.

(4) Accelerate gradually and maintain at approximately 1,500 rpm, or within the 1,300 –1,700 rpm range. Turn the A/C on, and drive in "D" for automatic, or in case of manual transmission, upshift appropriately. Shift carefully so that the engine speed does not fall below 1,200 rpm. Depress the accelerator pedal gradually and maintain a steady speed to avoid engine braking.

(5) Maintain the vehicle speed at 64 – 80 km/h (40 – 50 mph).
Keep the vehicle running for 1 – 2 min. after starting acceleration.

(6) After driving, stop at a safe place and turn the IG switch OFF for 3 sec. or more.

(7) Start the engine and do steps (3), (4) and (5) again.

HINT: If a malfunction is detected, the Malfunction Indicator Lamp will light up during step (7).

NOTICE: If this procedure is not strictly followed, you cannot detect the malfunctions.

V05958

DIAGNOSTIC TROUBLE CODE DETECTION DRIVING PATTERN (Cont'd)

Purpose of the driving pattern.
(a) To simulate diagnostic trouble code detecting condition after diagnostic trouble code is recorded.
(b) Touch check that the malfunction is corrected when the repair is completed confirming that diagnostic trouble code is no longer detected.

DTC	25	Air–Fuel Ratio Lean Malfunction

Malfunction: Open or Short in Heated Oxygen Sensor

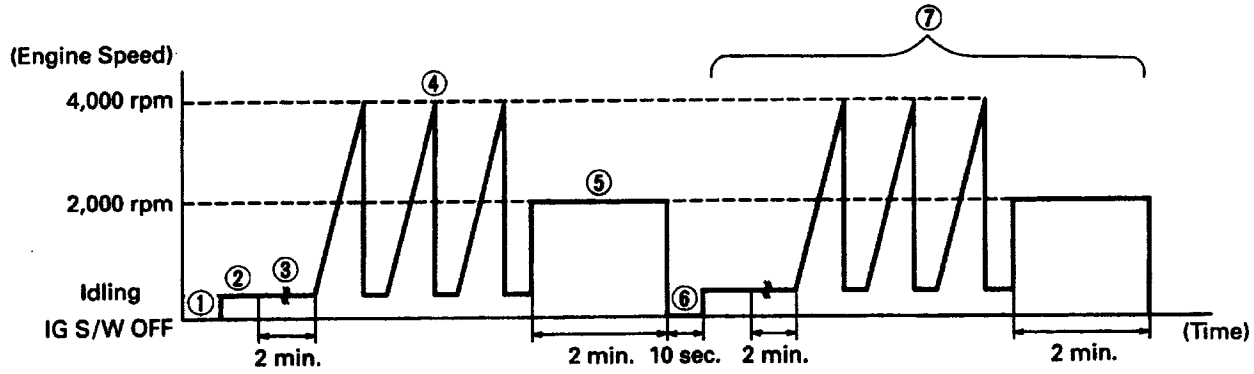

P02492

(1) Disconnect the fuse EFI (15 A) for 10 sec. or more, with IG switched OFF Start the engine and warm it up.
(2) Let the engine idle for 2 min.
(3) Quickly race the engine to 4,000 rpm 3 times.
(4) Race the engine at 2,000 rpm for 2min.
(5) Turn IG switch OFF for 10 sec.
(6) Start the engine and do steps (2), (3) and (5) again.
HINT If a malfunction is detected, the Malfunction Indicator Lamp will light up during step (7) .
NOTICE: If this procedure Is not strictly followed, you cannot detect the malfunctions.

V05959

DIAGNOSTIC TROUBLE CODE DETECTION DRIVING PATTERN (Cont'd)

Purpose of the driving pattern.

(a) To simulate diagnostic trouble code detecting condition after diagnostic trouble code is recorded.

(b) To check that the malfunction is corrected when the repair is completed confirming that diagnostic trouble code is no longer detected.

DTC	25	Air Fuel Ratio Lean Malfunction
	26	Air Fuel Ratio Rich Malfunction

Malfunction: Open or Short in Oxygen Sensor, Open or Short in injector Leak, Blockage

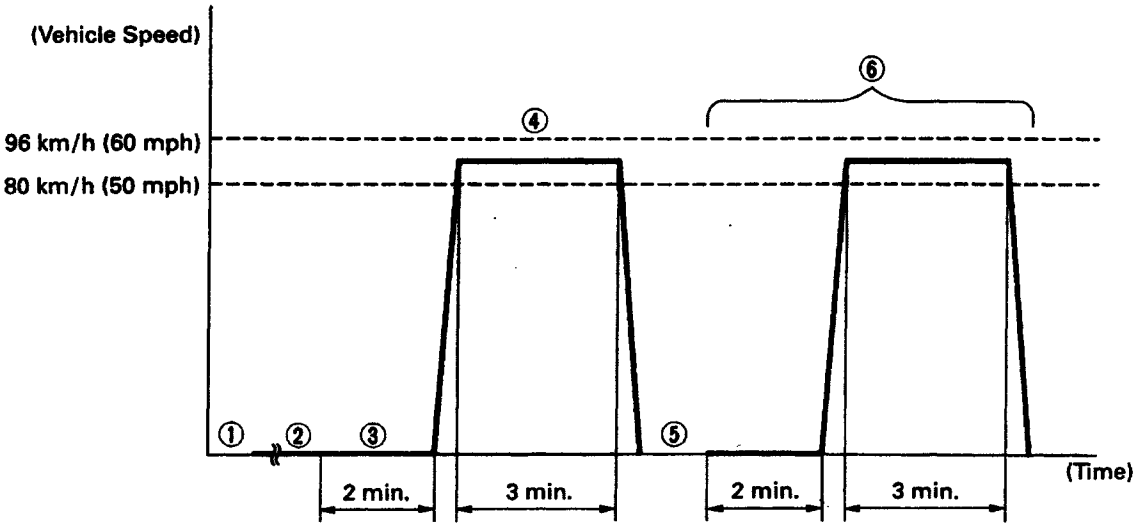

P02538

(1) Disconnect the fuse EFI (115A) for 10 sec. or more, with IG switched OFF.

(2) Start the engine and warm it up, with all accessories switched OFF

(3) Let the engine idle for 2min.

(4) With the transmission in 5th gear (”D” range for A/T), drive at 80–96 km/h (50–60 mph) for 3 min.

(5) After driving, stop at a safe place and turn the IG switch OFF for 3 –10 sec.

(6) Start the engine and perform steps (3) and (4) again.

HINT: If a malfunction is detected, the Malfunction Indicator Lamp will light up during step (6)

NOTICE: If this procedure is not strictly followed, you cannot detect the malfunctions.

V05960

DIAGNOSTIC TROUBLE CODE DETECTION DRIVING PATTERN (Cont'd)

Purpose of the driving pattern.

(a) To simulate diagnostic trouble code detecting condition after diagnostic trouble code is recorded.

(b) To check that the malfunction is corrected when the repair is completed confirming that diagnostic trouble code is no longer detected.

DTC	27	Sub Oxygen Sensor Circuit (CALIFORNIA)

Malfunction: Open or Short in Sub Oxygen Sensor

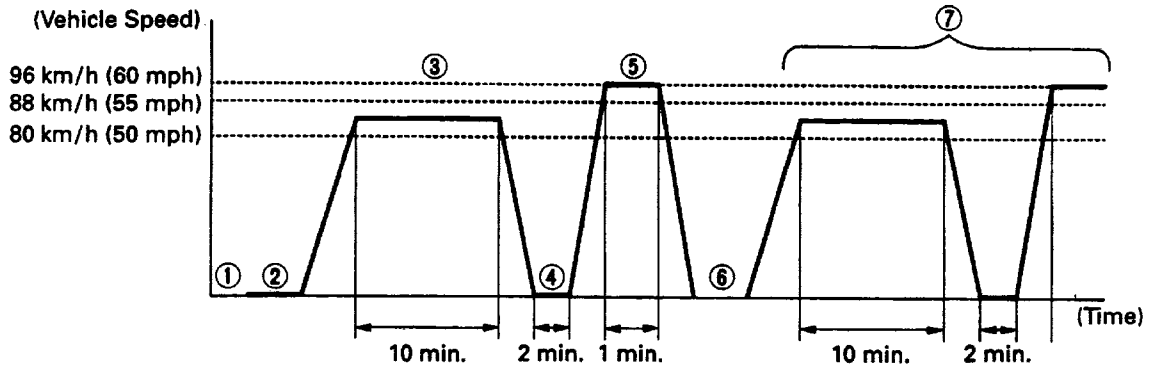

P02541

(1) Disconnect the fuse EFI (15 Ay for 10 sec. or more, with IG switched OFF

(2) Start the engine and warm it up with all accessories switched OFF

(3) Drive the vehicle at 80 – 88 km/h (50 – 55 mph) for 10 min. or more.

(4) Stop the vehicle at a safe place and idle the engine for 2 min. or less.

(5) Accelerate to 96 km/h (60 mph) with the throttle fully open and drive at 96 km/h (60 mph) for 1 min.

(6) After driving, stop at a safe place and turn the IG switch OFF for 3 sec. or more.

(7) Start the engine and do steps (3), (4), and (5) again.

HINT: If a malfunction is detected, the Malfunction Indicator Lamp will light up during step (7).

NOTICE: If this procedure is not strictly followed, you cannot detect the malfunctions.

V05961

DIAGNOSTIC TROUBLE CODE DETECTION DRIVING PATTERN (Cont'd)

Purpose of the driving pattern.

(a) To simulate diagnostic trouble code detecting condition after diagnostic trouble code is recorded.

(b) To check that the malfunction is corrected when the repair is completed confirming that diagnostic trouble code is no longer detected.

DTC	71	EGR System Malfunction

Malfunction: Short in VSV Circuit for EGR, Loose EGR Hose, Valve Stuck

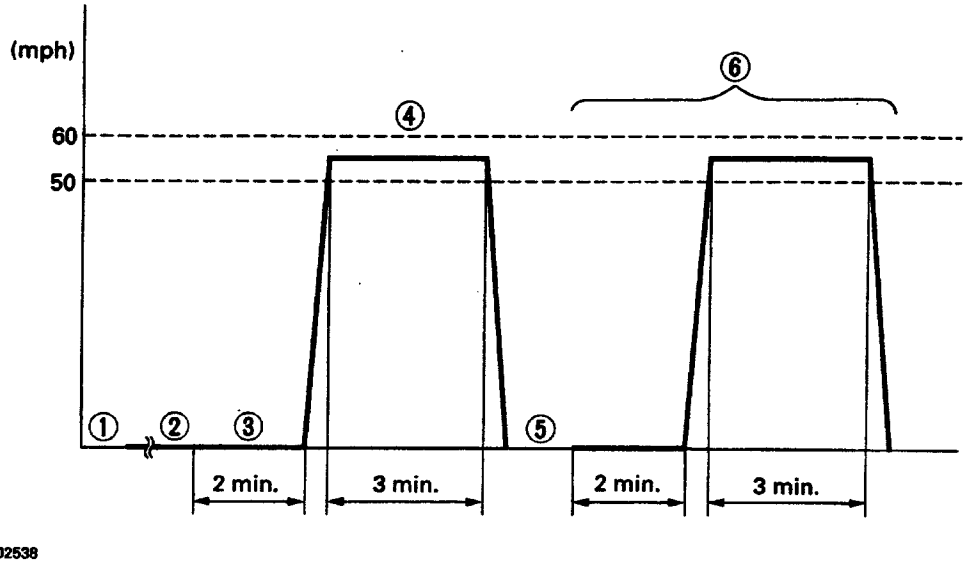

(1) Disconnect the EFI fuse (15 Ay for 10 sec. or more, with IG switch OFF

(2) Start the engine and warm it up, with all accessories switched OFF

(3) Let the engine idle for 2 min.

(4) With the transmission in 5th gear ("D" range for A/T), drive at 50 – 60 mph for 3 min.

(5) After driving, stop at a safe place and turn the IG switch OFF for 3 –10 sec.

(6) Start the engine and perform steps (3) and (4) again. .

HINT: If a malfunction is detected, the Malfunction Indicator Lamp will light up during step (6) .

NOTICE: If this procedure Is not strictly followed, you cannot detect the malfunctions.

V06088

INSPECTION OF DIAGNOSIS CIRCUIT

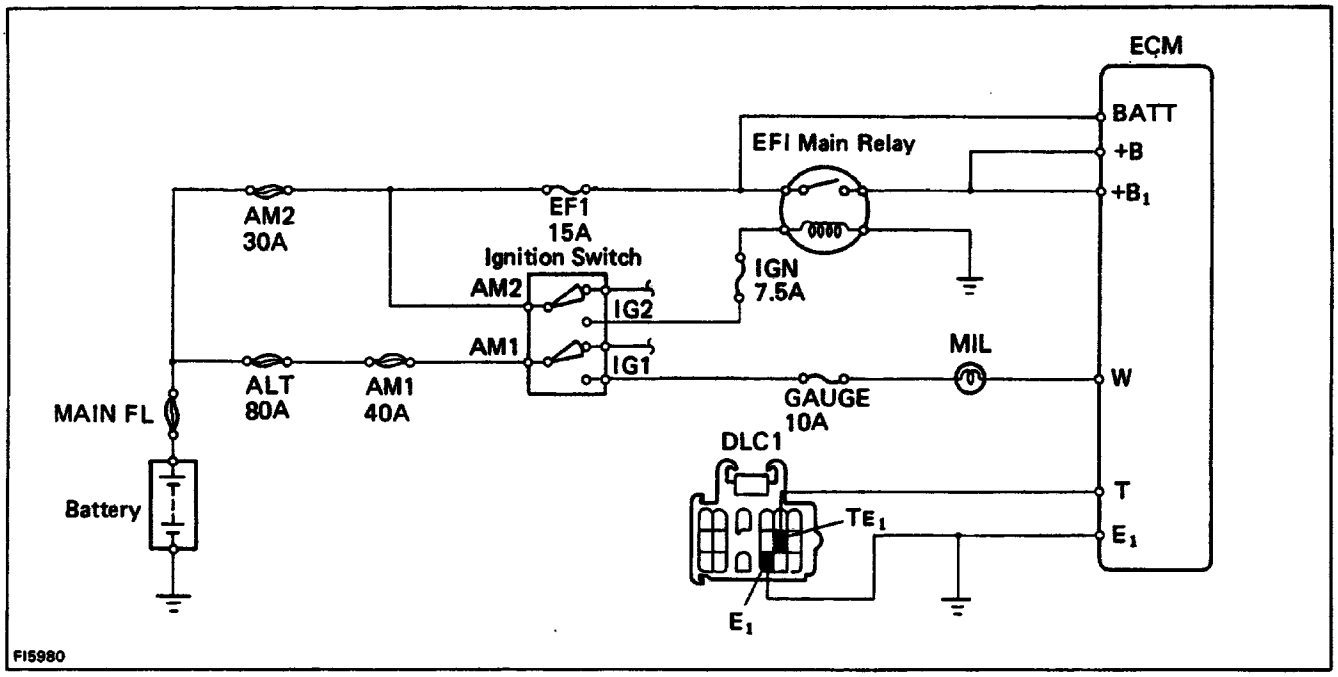

1. Does Malfunction Indicator Lamp come on when ignition switch is at ON?
   - YES → System Normal
   - NO → Does MIL come on when ECM terminal W is grounded to the body?
     - YES → Check wiring between ECM terminal E, and body ground.
       - OK → Try another ECM.
       - BAD → Repair or replace.
     - NO → Check bulb, fuse and wiring between ECM and ignition switch.
       - BAD → Repair or replace.

2. Does MIL go off when the engine is started?
   - YES → System Normal
   - NO → Check wiring between ECM and MIL.
     - BAD → Repair.
     - OK → is there diagnostic trouble code output when DLC 1 terminals TE, and E, are connected?
       - NO → Check wiring between ECM terminal T and DLC1 terminal TE1, and ECM terminal E, and DLC1 terminal E1.
         - OK → Try another ECM.
       - YES → Does MIL go off after repair according to malfunction code?
         - NO → Further repair required.
         - YES → System OK → Cancel out diagnostic trouble code.

V01792

EFI MAIN RELAY

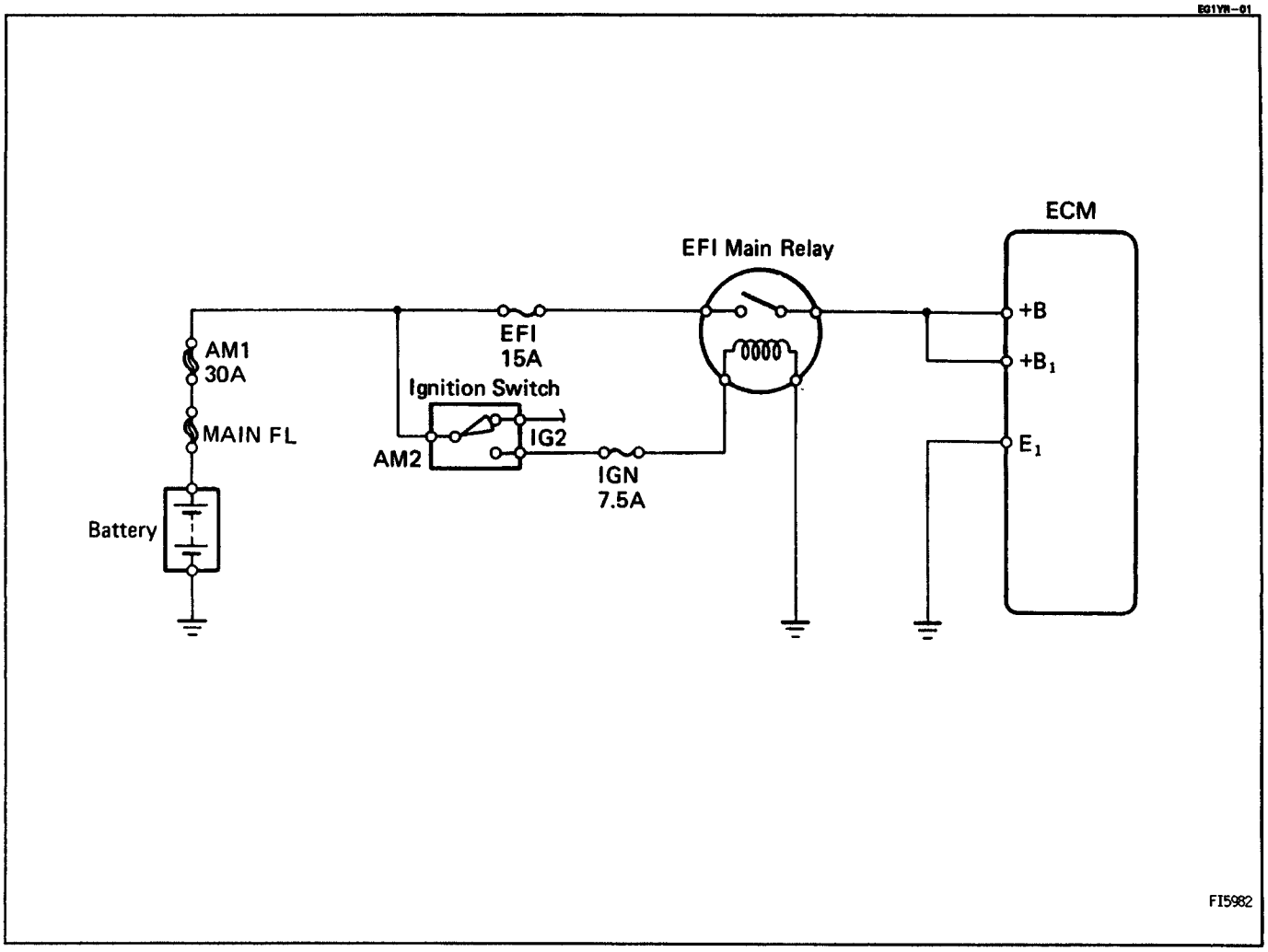

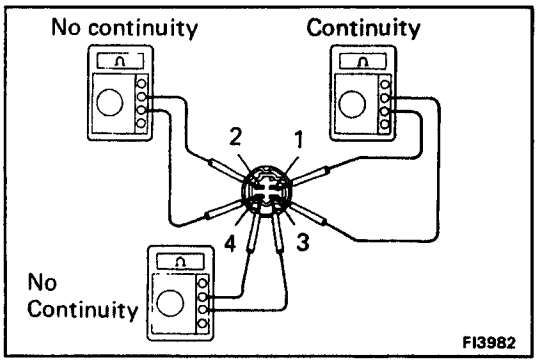

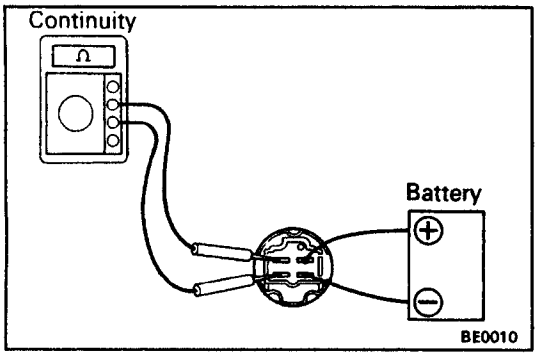

EFI MAIN RELAY INSPECTION

1. INSPECT RELAY CONTINUITY

(a) Using an ohmmeter, check that there is continuity between terminals 1 and 3.

(b) Check that there is no continuity between terminals 2 and 4.

(c) Check that there is no continuity between terminals 3 and 4.

If operation is not as specified, replace the relay.

2. INSPECT RELAY OPERATION

(a) Apply battery voltage across terminals 1 and 3.

(b) Using an ohmmeter, check that there is continuity between terminals 2 and 4.

If operation is not as specified, replace the relay.

EGR GAS TEMPERATURE SENSOR

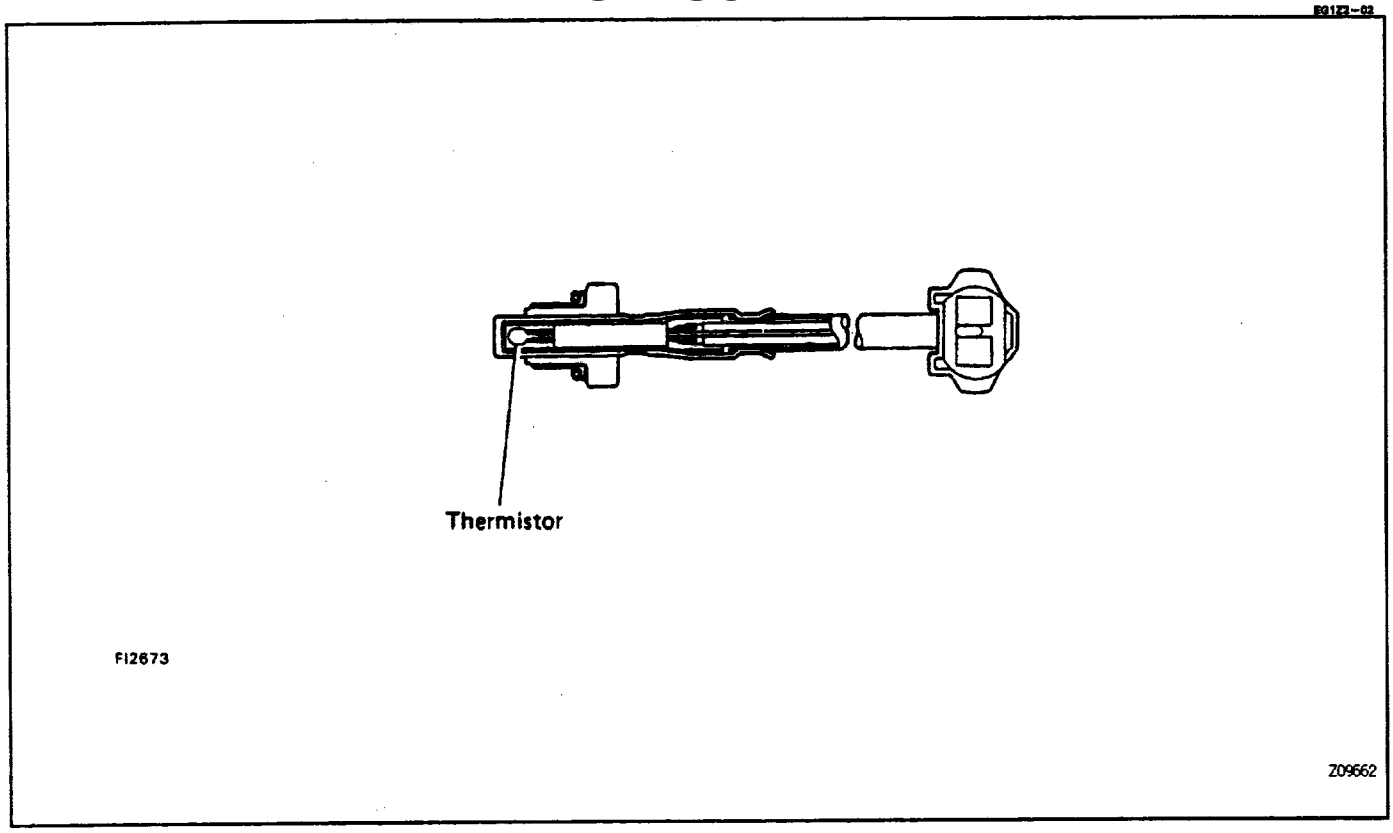

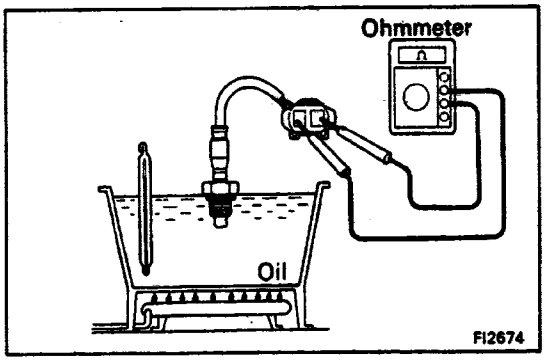

EGR GAS TEMP. SENSOR INSPECTION

MEASURE RESISTANCE OF EGR GAS TEMP. SENSOR

Using an ohmmeter, measure the resistance between both terminals.

Resistance:

At 50˚C (122˚F): 69 – 89 kΩ

At 100°C (212˚F): 11 – 15 kΩ

At 50˚C (302˚F): 2 – 4 kΩ

If the resistance is not as specified, replace the sensor.

ELECTRONIC PARTS LOCATION

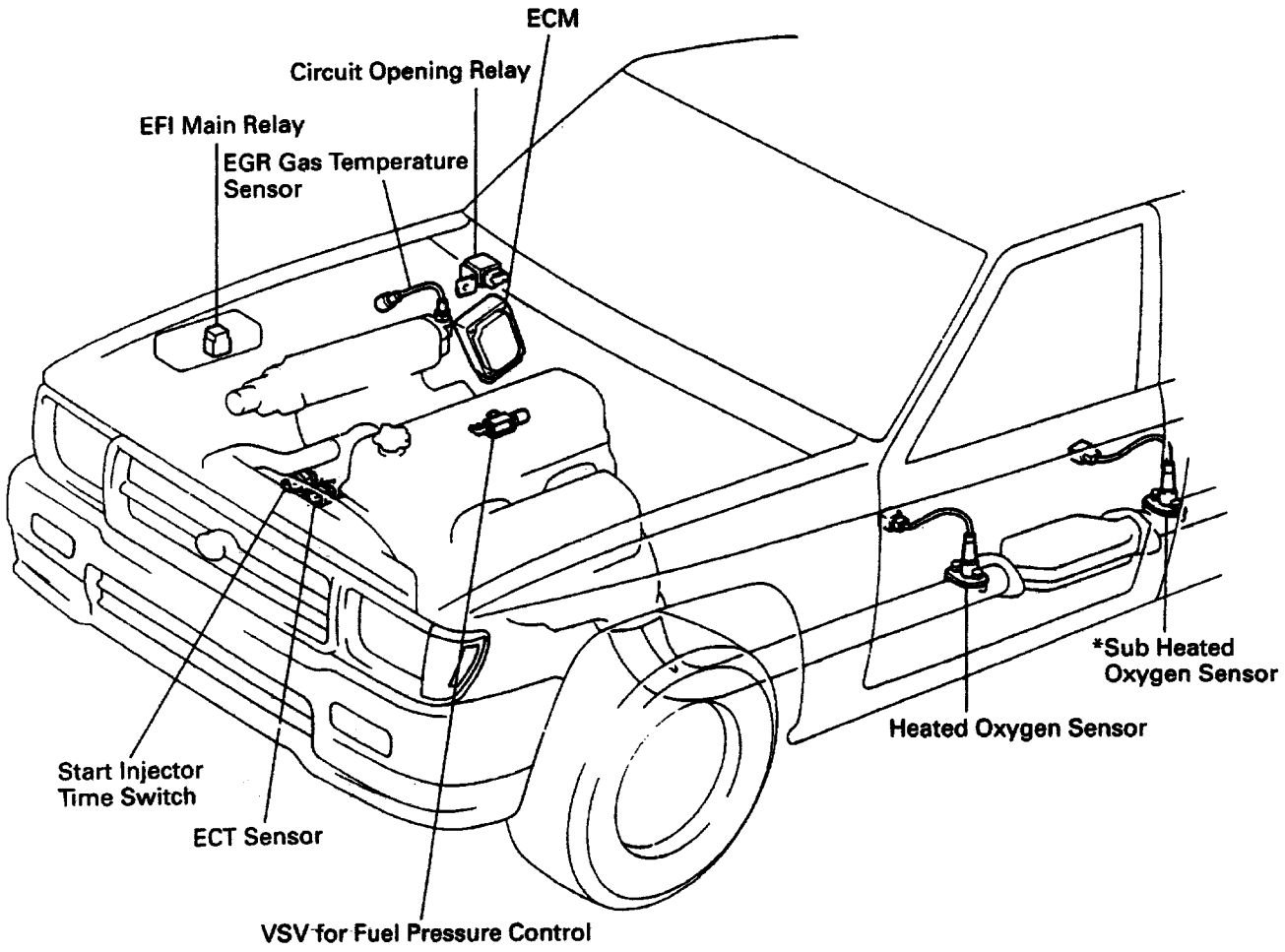

P09156

*California Vehicles only

Z14069

ENGINE CONTROL MODULE (ECM)

ECM INSPECTION

HINT: The MFI circuit can be checked by measuring the voltage and resistance at the wiring connectors of the ECM.

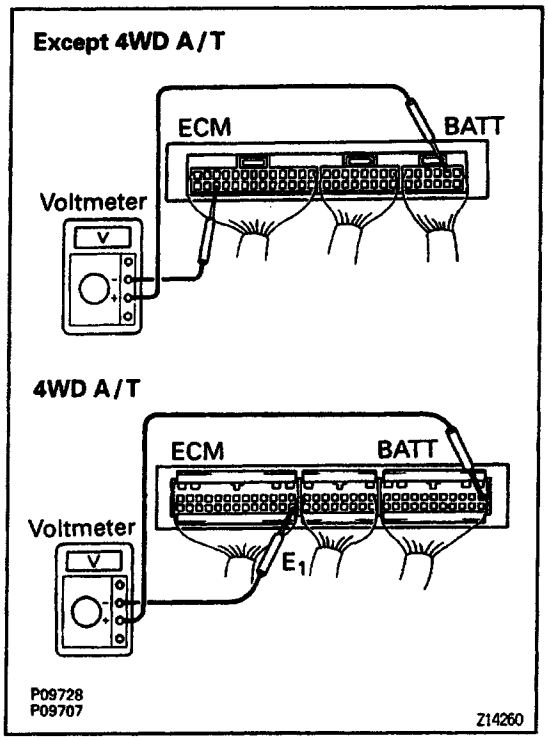

1. INSPECT VOLTAGE OF ECM

Check the voltage between each terminal of the wiring connectors.

- Turn the ignition switch ON.
- Measure the voltage at each terminal.

HINT:

- Do all voltage measurements with the connectors connected.
- Verify that the battery voltage is 1 1 V or more when the ignition switch is ON.

ECM Voltage Wiring Connectors

Terminals	Condition		STD voltage
BATT – E_1	–		9 – 14
+B – E_1	Ignition switch ON		
$+B_1$ – E_1			
IDL – E_2 (E_{21})	Ignition switch ON	Throttle valve open	9 – 14
Vcc – E_2 (E_{21})		–	4.5 – 5.5
VTA – E_2 (E_{21})		Throttle valve fully closed	0.3 – 0.8
		Throttle valve fully open	3.2 – 4.9
Vc – E_2 (E_{21})	Ignition switch ON	–	6 – 10
Vs – E_2 (E_{21})		Measuring plate fully closed	0,5 – 2.5
		Measuring plate fully open	5 – 10
	Idling		2 – 8
THA – E_2 (E_{21})	Ignition switch ON	Intake air temperature 20°C (68°F)	0.5 – 3.4
THW – E_2 (E_{21})	Ignition switch ON	Coolant temperature 80°C (176°F)	0.2 – 1.0
STA – E_1	Ignition switch START position		6 – 12
No.10 – E_{01} No.20 – E_{02}	Ignition switch ON		9 – 14
IGt – E_1	Idling		0.7 – 1.0
W – E_1	No trouble (MIL off) and engine running		9 – 14
STJ – E_1	Ignition switch START position	Coolant temperature 80°C (176°F)	6 – 12
STP – E_1	Stop light switch ON		7.5 – 14

ECM Terminals

Except 4WD A I T

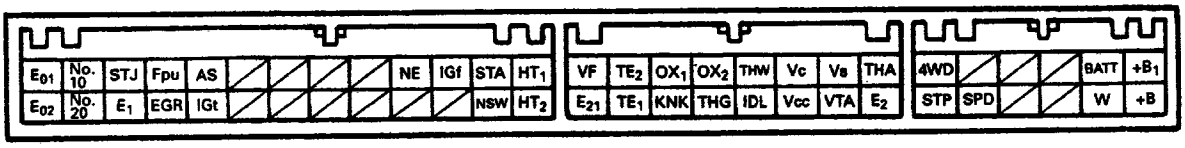

4WD A/T

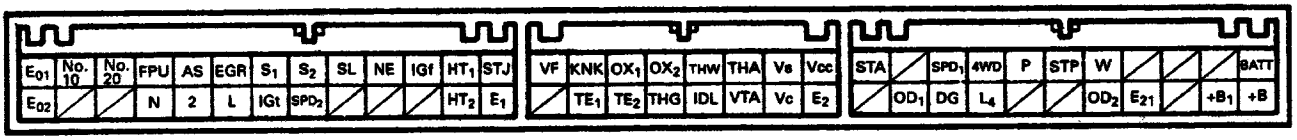

P09752
FI2796

V06093

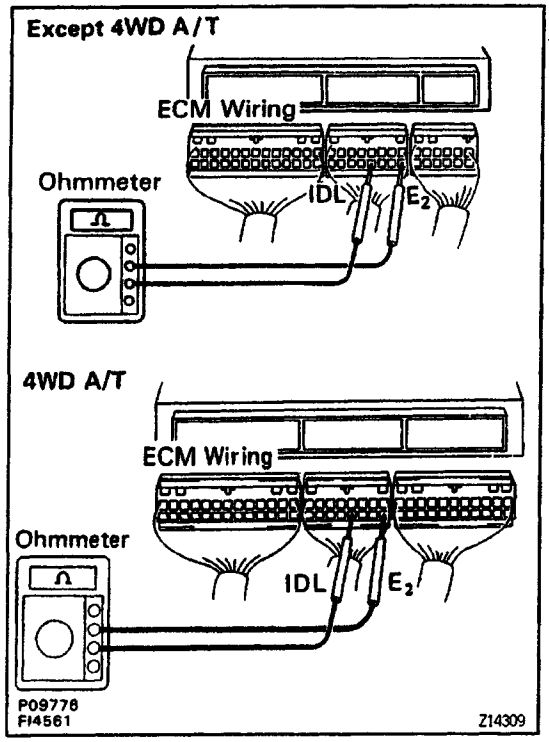

2. INSPECT RESISTANCE OF ECM

NOTICE:

- Do not touch the ECM terminals.
- The tester probe should be inserted into the wiring connector from the wiring side.

Check the resistance between each terminal of the wiring connectors.

- Disconnect the connectors from the ECM.
- Measure the resistance at each terminal.

ECM Resistance Wiring Connectors

Terminals	Condition	Resistance (kΩ)
IDL – E_2 (E_{21})	Throttle valve open	Infinity
	Throttle valve fully closed	2.3 or less
VTA – E_2 (E_{21})	Throttle valve fully open	3.1 – 12.1
	Throttle valve fully closed	0.47 – 6.1
Vcc – E_2 (E_{21})	–	3.9 – 9.0
THA – E_2 (E_{21})	Intake air temperature 20˚C (68˚F)	2 – 3
THW – E_2 (E_{21})	Coolant temperature 80˚C (176˚F)	0.2 – 0.4
+B – E_2 (E_{21})	–	0.2 – 0.4
Vc – E_2 (E_{21})	–	0.1 – 0.3
Vs – E_2 (E_{21})	Measuring plate fully closed	0.02 – 0.4
	Measuring plate fully open	0.02 – 1.00
Ne – E_1	Cold	0.185 – 0.275
	Hot	0.240 – 0.325
STJ – E_1	–	Infinity
FPU – E_1	–	Infinity
HT_1 – E_1	–	Infinity

ECM Terminals

Except 4WD A / T

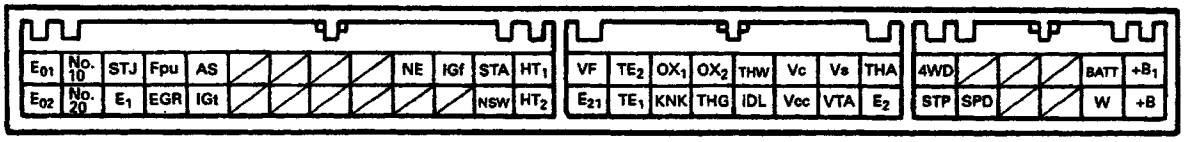

4WD A!T

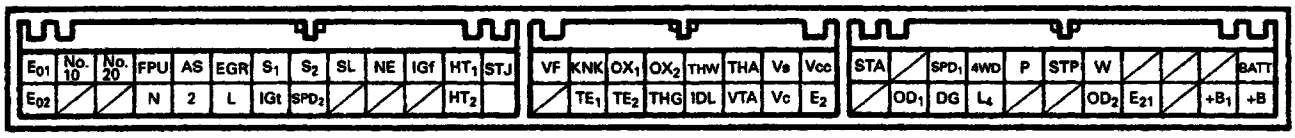

P09752
FI2796

V06092

ENGINE COOLANT TEMPERATURE (ECT) SENSOR

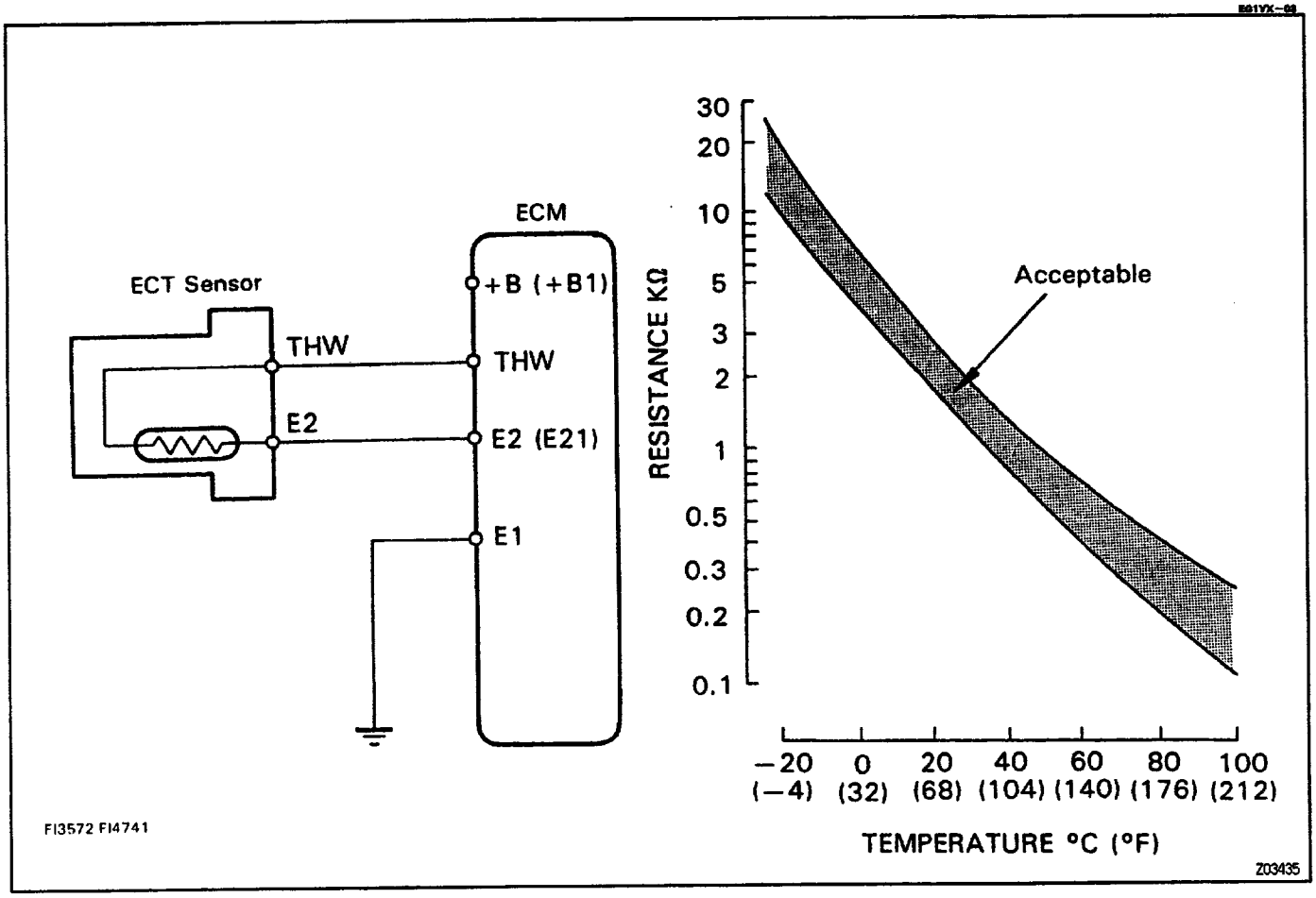

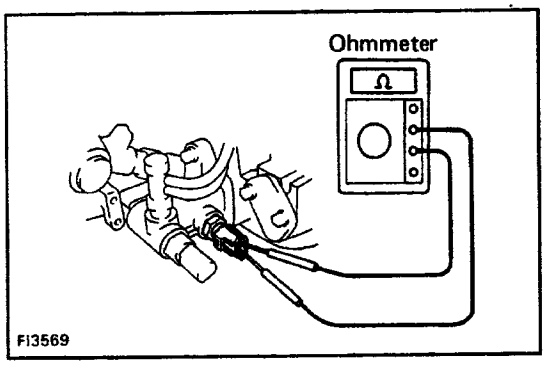

ENGINE COOLANT TEMPERATURE (ECT) SENSOR INSPECTION

(a) Disconnect the connector.

(b) Using an ohmmeter, measure the resistance between the terminals.

Resistance: Refer to the chart above.

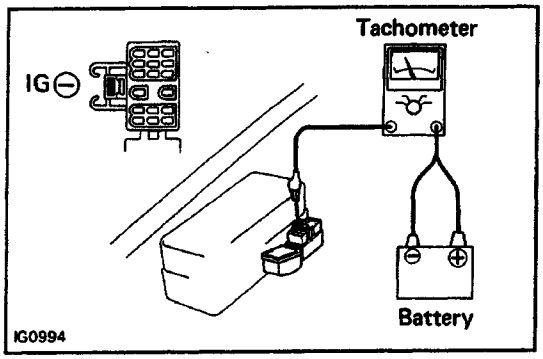

FUEL CUT RPM

FUEL CUT RPM INSPECTION

1. WARM UP ENGINE

Allow the engine to warm up to normal operating temperature.

2. CONNECT TACHOMETER

Connect the test probe of a tachometer to terminal IG (–) of the DLC1.

NOTICE

- **Never allow the tachometer terminal to touch ground as it could result in damage to the igniter and/or ignition coil.**
- **As some tachometers are not compatible with this ignition system, we recommend that you confirm the compatibility of your unit before use.**

3. INSPECT FUEL CUT OPERATION

(a) Increase the engine speed to at least 2,500 rpm.
(b) Check for injector operating sound.
(c) Check that when the throttle lever is released, injector operation sound stops momentarily and then resumes.

HINT:

- **The vehicle should be stopped.**
- **Accessories switched OFF.**

2WD M/T (stop light switch ON)

Fuel cut rpm:
1,300 rpm
Fuel return rpm:
1,000 rpm

Others

Fuel cut rpm:
1,900 rpm
Fuel return rpm:
1,600 rpm

4. REMOVE TACHOMETER

FUEL PRESSURE CONTROL SYSTEM

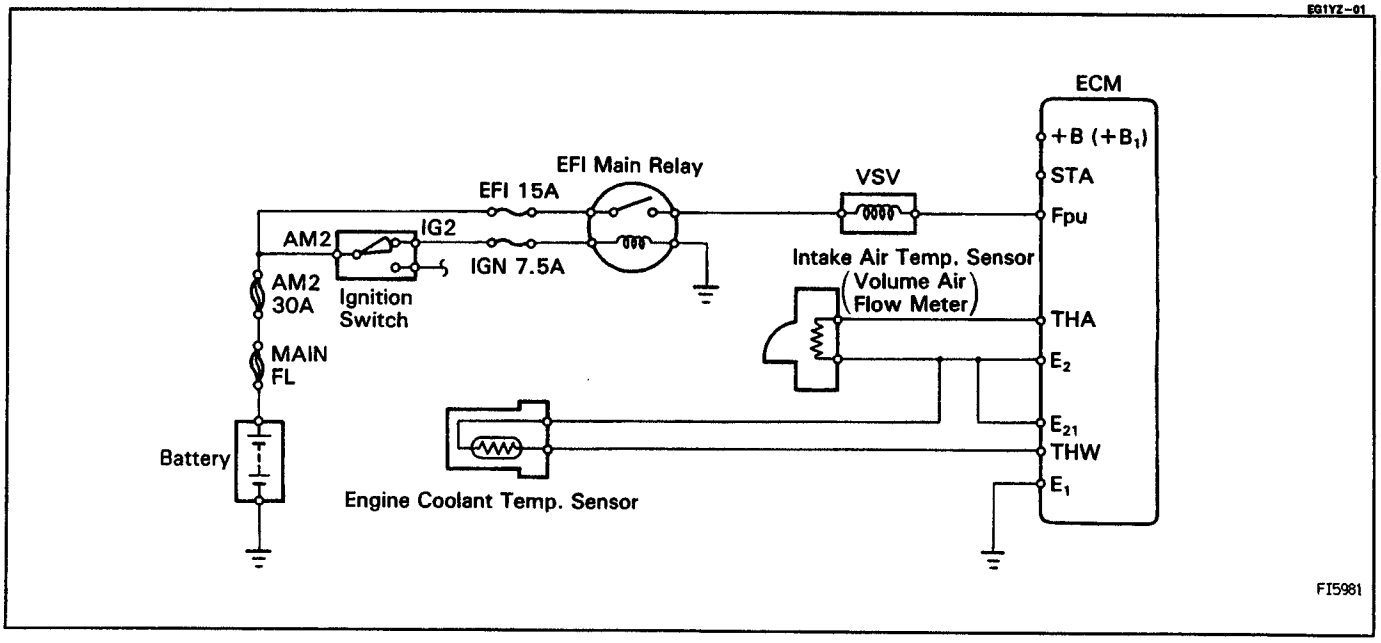

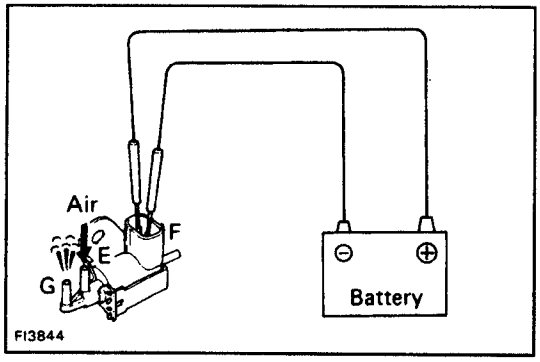

VSV INSPECTION

1. CHECK VACUUM CIRCUIT CONTINUITY IN VSV BY BLOWING AIR INTO PIPE

(a) Connect the VSV terminals to the battery terminals as illustrated.

(b) Blow air into pipe E and check that air comes out of pipe G.

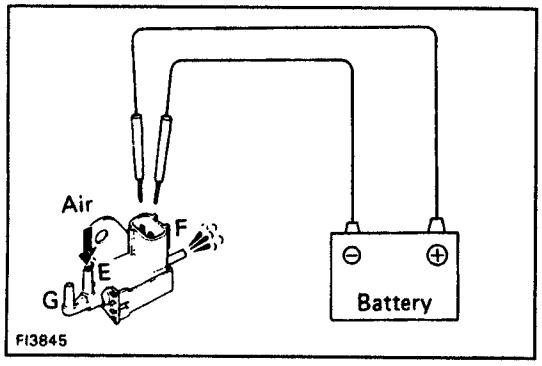

(c) Disconnect the battery from the VSV.

(d) Blow air into pipe E and check that air comes out of pipe F.

If a problem is found, repair or replace the VSV.

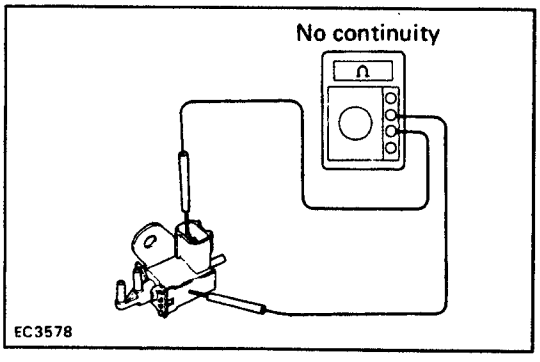

2. CHECK FOR SHORT CIRCUIT

Using an ohmmeter, check that there is no continuity between the terminal and the VSV body.

If there is continuity, replace the VSV.

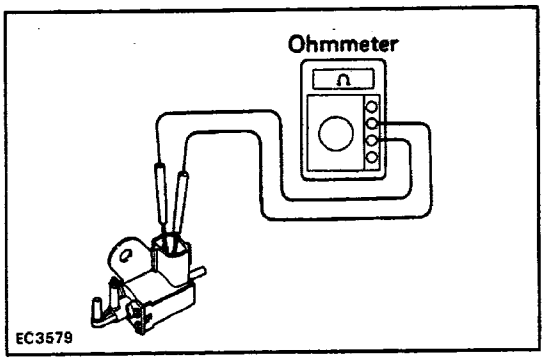

3. CHECK FOR OPEN CIRCUIT

Using an ohmmeter, measure the resistance between both terminals as illustrated.

Specified resistance:

At 20°C (68° F): 30 – 50 Ω

If resistance is not within specification, replace the VSV.

FUEL PRESSURE REGULATOR

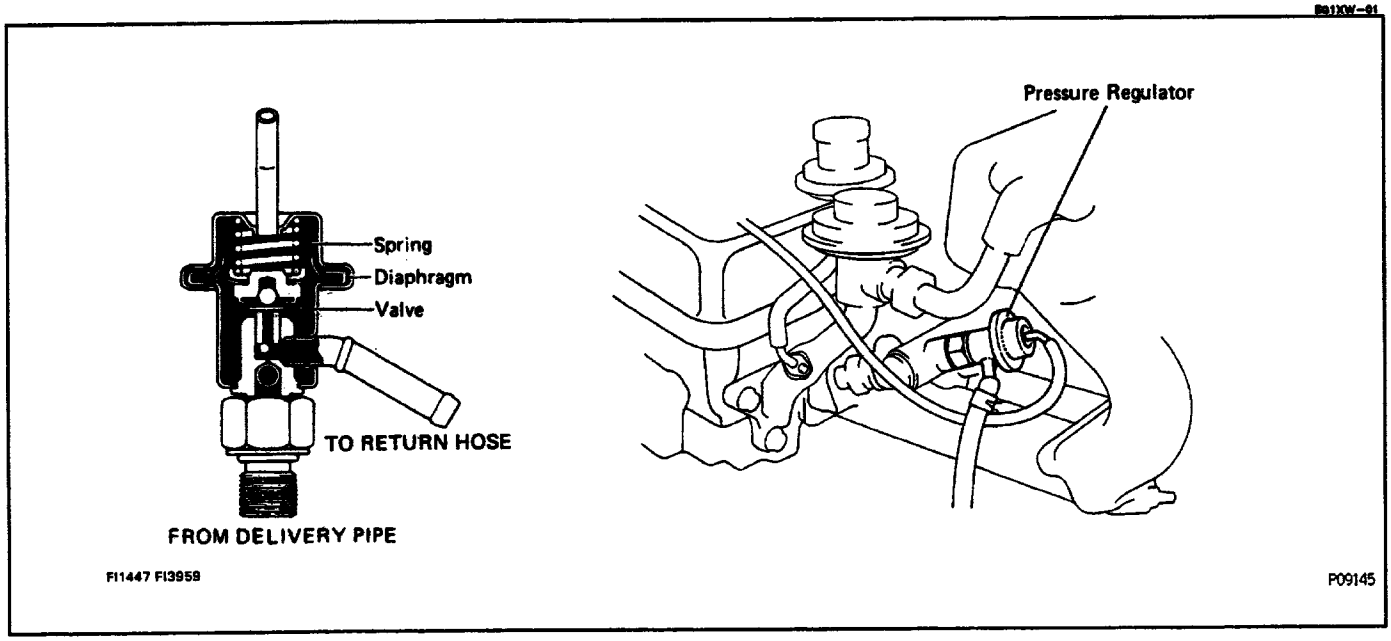

ON–VEHICLE INSPECTION

CHECK FUEL PRESSURE (See page EG1–164)

PRESSURE REGULATOR REMOVAL

1. DISCONNECT VACUUM SENSING HOSE

2. REMOVE NO. 1 EGR PIPE

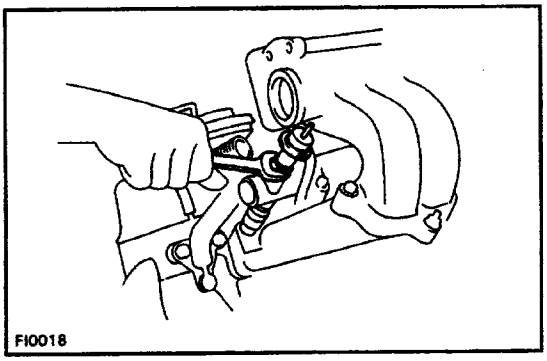

3. DISCONNECT FUEL HOSE

(a) Put a suitable container or shop towel under the pressure regulator.

(b) Disconnect the fuel hose the pressure regulator.

4. REMOVE PRESSURE REGULATOR

Loosen the lock nut, and remove pressure regulator.

PRESSURE REGULATOR INSTALLATION

1. INSTALL PRESSURE REGULATOR

Install the pressure regulator. Torque the lock nut.

Torque: 29 N–m (300 kgf–cm. 22 ft–lbf)

2. CONNECT FUEL HOSE

3. INSTALL NO. 1 EGR PIPE

Install a new gasket and No. 1 EGR pipe.

4. CONNECT VACUUM SENSING HOSE

FUEL PUMP

SYSTEM CIRCUIT

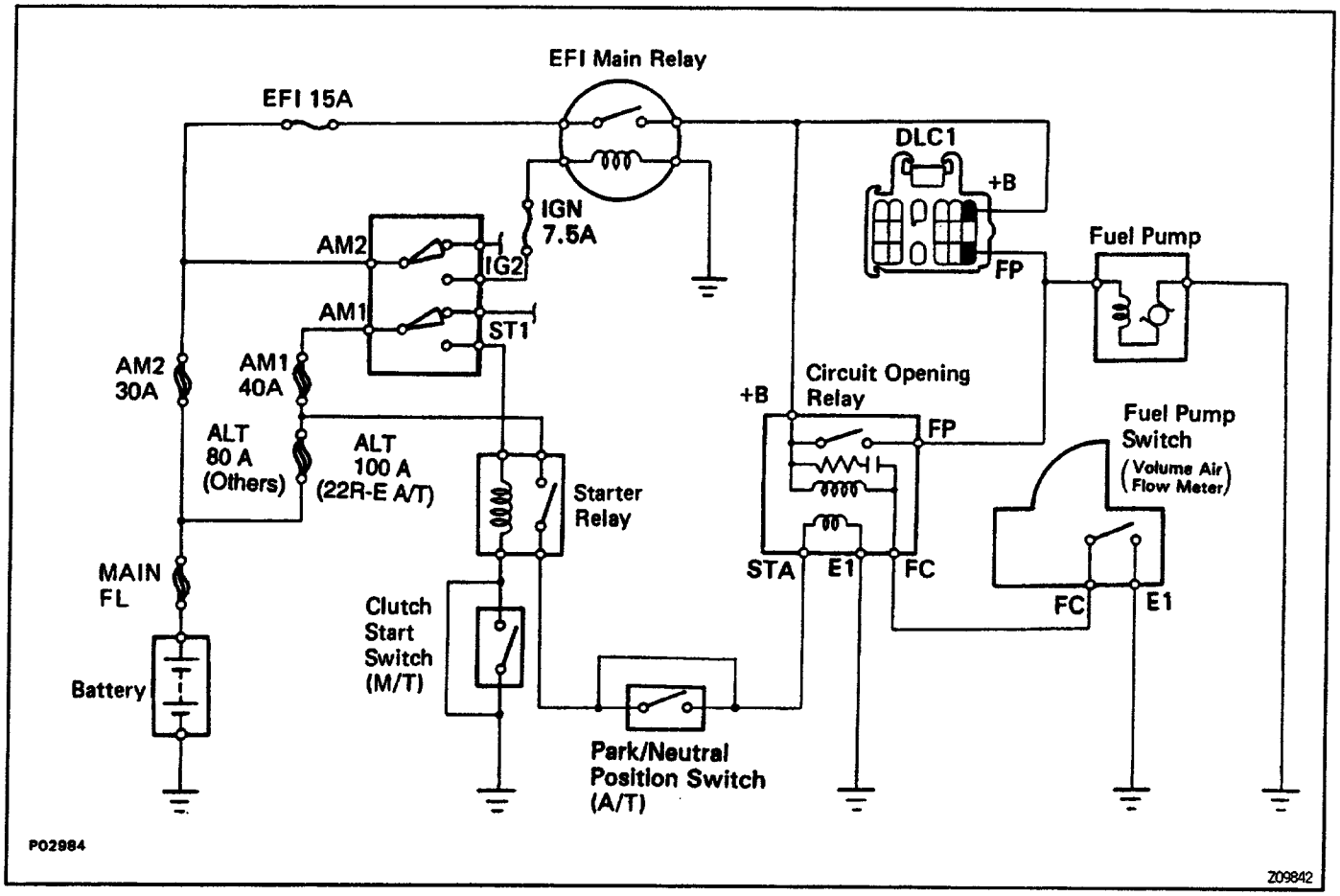

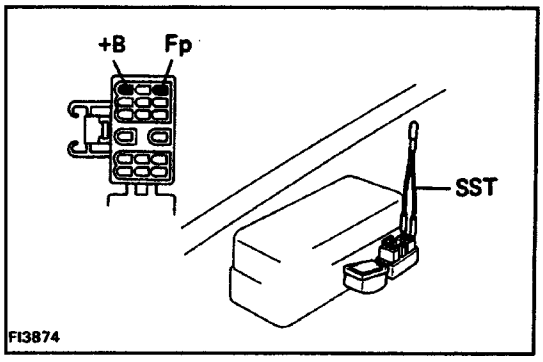

ON–VEHICLE INSPECTION

1. CHECK FUEL PUMP OPERATION

(a) Turn the ignition switch ON.

HINT: Do not start the engine.

(b) Using SST, connect terminals Fp and +B of the DLC1.

SST 09843–18020

HINT: The DLC1 is located near the No. 2 relay block.

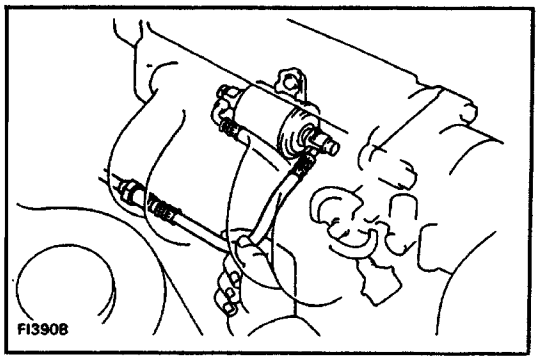

(c) Check that there is pressure in the fuel inlet hose.

HINT: At this time, you will hear fuel return noise from the pressure regulator.

(d) Remove SST from the DLC1.

(e) Turn the ignition switch OFF.

If there is no pressure, check these parts:

- Fusible links
- Fuses (EFI 15A, IGN 7.5A)
- EFI main relay

- Circuit opening relay
- Fuel pump
- Wiring connections

2. CHECK FUEL PRESSURE

(a) Check that the battery voltage is above 12 volts.

(b) Disconnect negative (–) terminal cable from the battery.

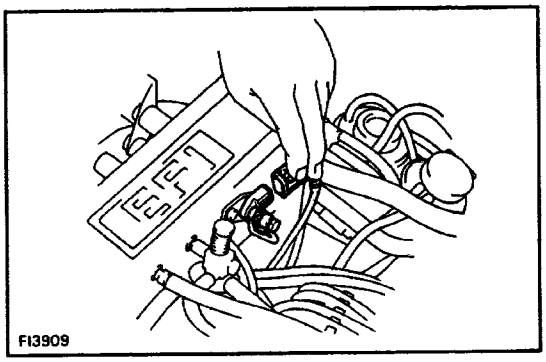

(c) Disconnect the wiring connector from the cold start injector.

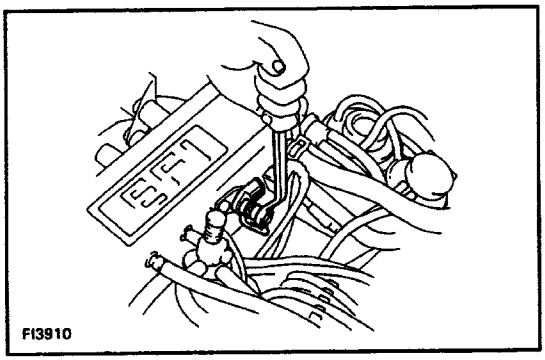

(d) Put a suitable container or shop towel under the cold start injector pipe.

(e) Slowly loosen the union bolts of the cold start injector pipe and remove the bolts, cold start injector pipe and 4 gaskets.

(f) Drain the fuel from the delivery pipe.

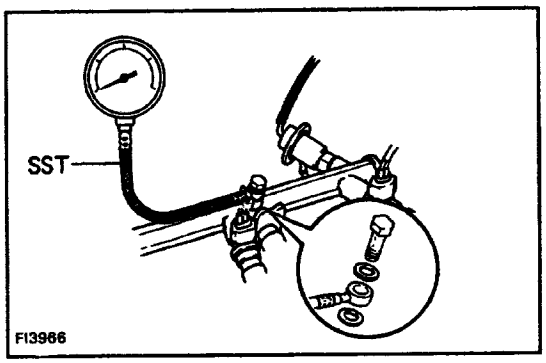

(g) Install a gasket, SST, another gasket and union bolt tc the delivery pipe as shown in the illustration.
SST 09268–45012

(h) Wipe oft any splattered gasoline.

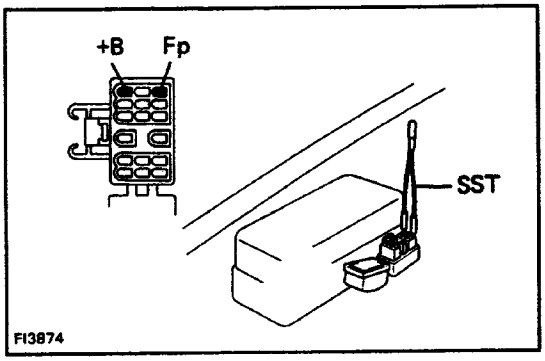

(i) Reconnect the negative (–) terminal cable to the battery.

(j) Using SST, connect terminals Fp and +B of the DLC1
SST 09843–18020

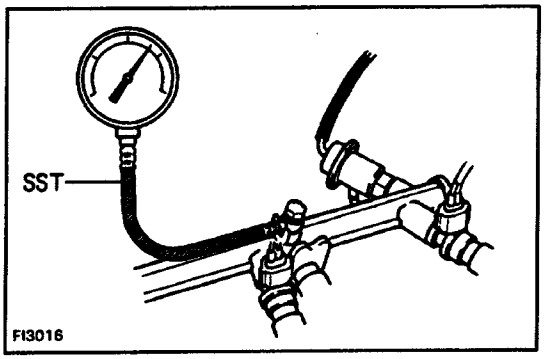

(k) Turn the ignition switch ON.
(l) Measure the fuel pressure.
Fuel pressure:
265 – 304 kPa (2.7 – 3.1 kgf/cm2, 38 – 44 psi)
If high, replace the pressure regulator.
If low, check these parts:

- Fuel hoses and connections
- Fuel pump
- Fuel filter
- Pressure regulator

(m) Remove SST from the DLC1.
(n) Start the engine.
(o) Disconnect the vacuum hose from the pressure regulator and plug it closed.
(p) Measure the fuel pressure at idling.
Fuel pressure:
265 – 304 kPa (2.7 – 3.1 kgf/cm2, 38 – 44 psi)

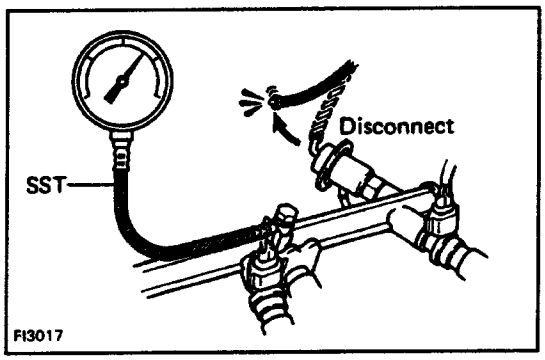

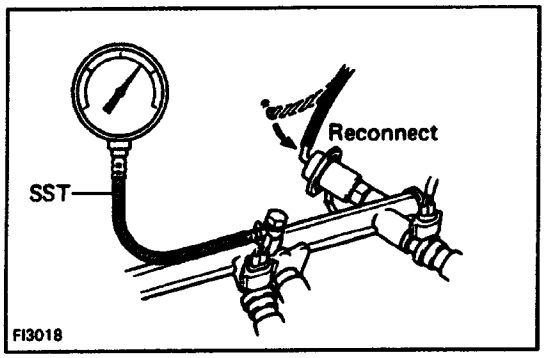

(q) Reconnect the vacuum hose to the pressure regulator.
(r) Measure the fuel pressure at idling.
Fuel pressure:
226 – 265 kPa (2.3 – 2.6 kgf/cm', 33 – 37 psi)
If not within the specified pressure, check the vacuum hose and pressure regulator.
(s) Stop the engine. Check that the fuel pressure remains above 147 kPa (1.5 kgf/cm2, 21 psi) for 5 minutes after the engine is turned off. If not within the specification, check the fuel pump, pressure regulator and/or injectors.
(t) After checking fuel pressure, disconnect the battery ground strap and carefully remove the SST to prevent gasoline from splashing.
(u) Using new gaskets, reconnect the cold start injector pipe to the delivery pipe and cold start injector.
(v) Connect the wiring connector to the cold start injector.
(w) Start the engine and check for fuel leakage.

COMPONENTS FOR REMOVAL AND INSTALLATION

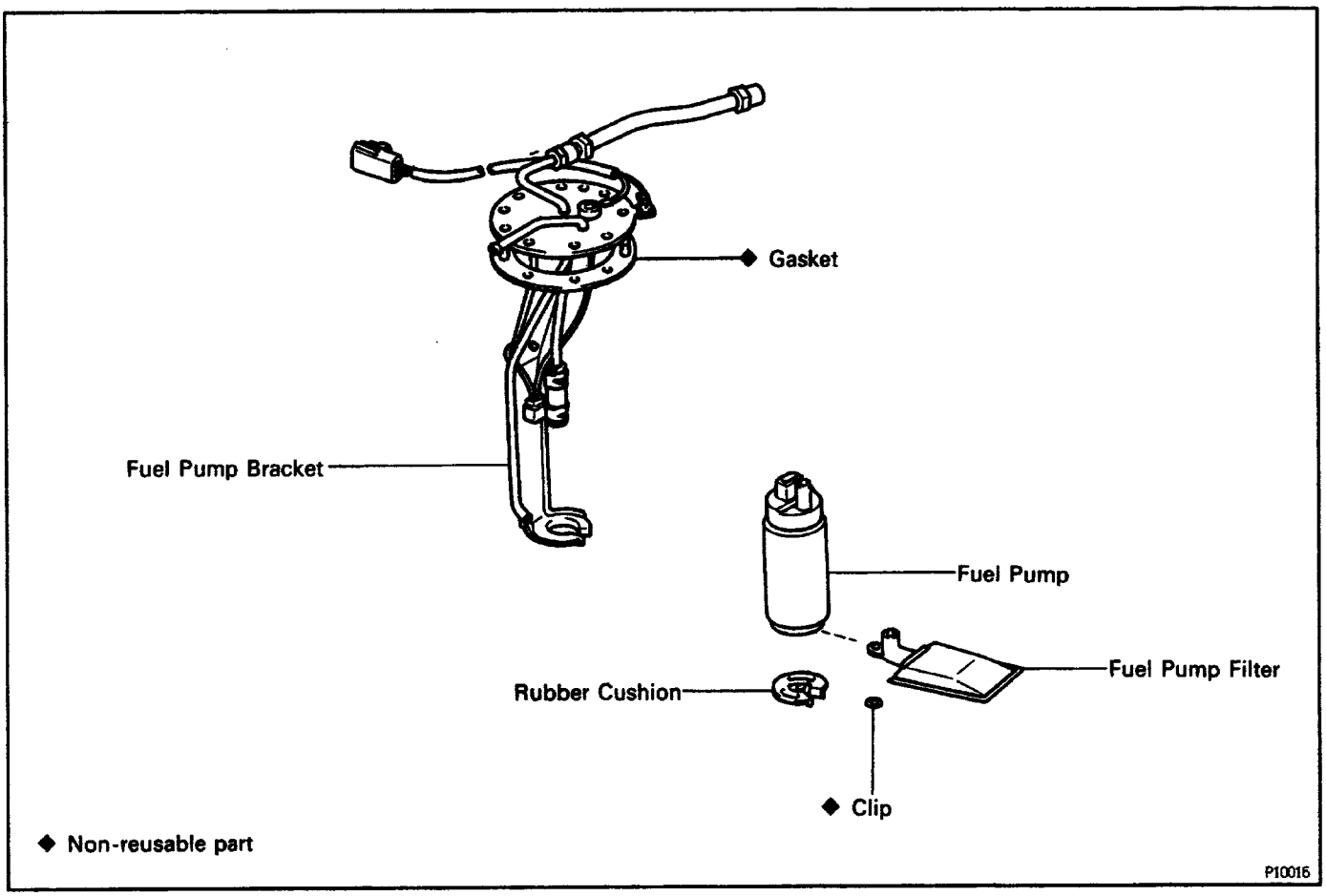

FUEL PUMP REMOVAL

1. DRAIN FUEL FROM FUEL TANK

CAUTION: Do not smoke or work near an open flame when working on the fuel pump.

2. REMOVE FUEL TANK

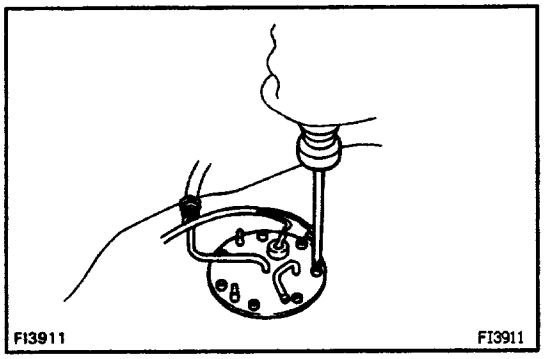

3. REMOVE FUEL PUMP BRACKET

(a) Remove the 7 bolts.

(b) Pull out the fuel pump bracket.

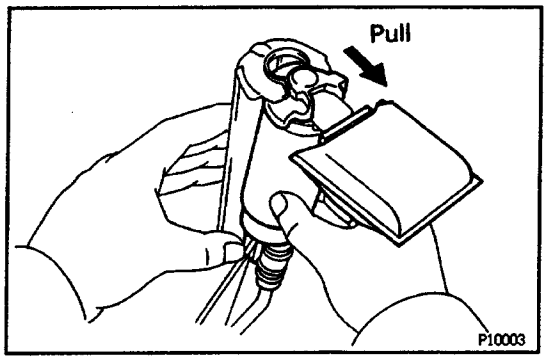

4. REMOVE FUEL PUMP FROM FUEL PUMP BRACKET

(a) Pull off the lower side of the fuel pump from the pump bracket.

(b) Disconnect the fuel pump connector. ’

(c) Disconnect the fuel hose from the fuel pump, and remove the fuel pump.

(d) Remove the rubber cushion from the fuel pump.

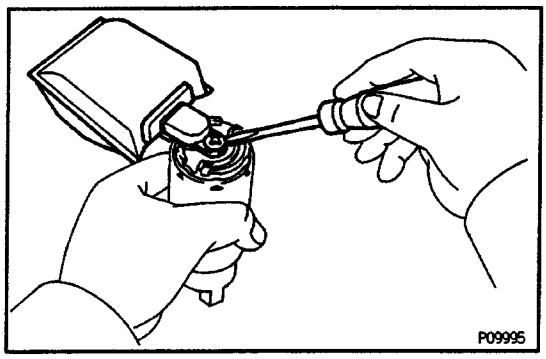

5. REMOVE FUEL PUMP FILTER FROM FUEL PUMP

(a) Using a small screwdriver, remove the clip.

(b) Pull out the pump filter.

FUEL PUMP INSTALLATION

(See Components for Removal and Installation)

1. INSTALL FUEL PUMP FILTER TO FUEL PUMP

Install the pump filter with a new clip.

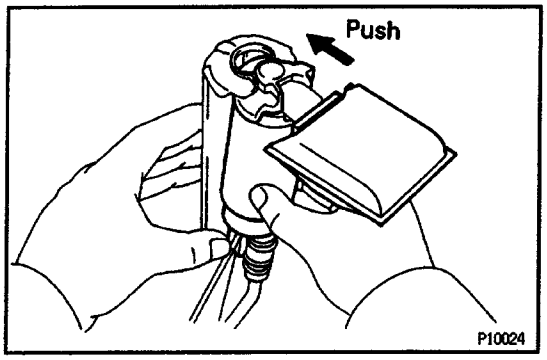

2. INSTALL FUEL PUMP TO FUEL PUMP BRACKET

(a) Install the rubber cushion to the fuel pump.

(b) Connect the fuel hose to the outlet port of the fuel pump.

(c) Install the fuel pump connector.

(d) Install the fuel pump by pushing the lower side of the fuel pump.

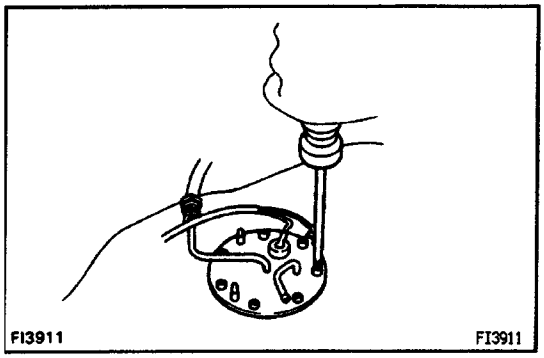

3. INSTALL FUEL PUMP BRACKET

(a) Place the bracket with a new gasket on the fuel tank.

(b) Install and tighten the 7 bolts.

Torque: 3.9 N–m (40 kgf–cm, 34 in.–lbf)

INSTALL FUEL TANK

NOTICE:

- **Tighten the. pipe and flare nut type hose to the specified torque.**
- **Push in the pipe and insert–type hose to the specified position, and install the clip to the specified location. If reusing the hose, reinstall the clip at the original location.**

5. REFILL WITH FUEL

FUEL TANK AND LINE

COMPONENTS

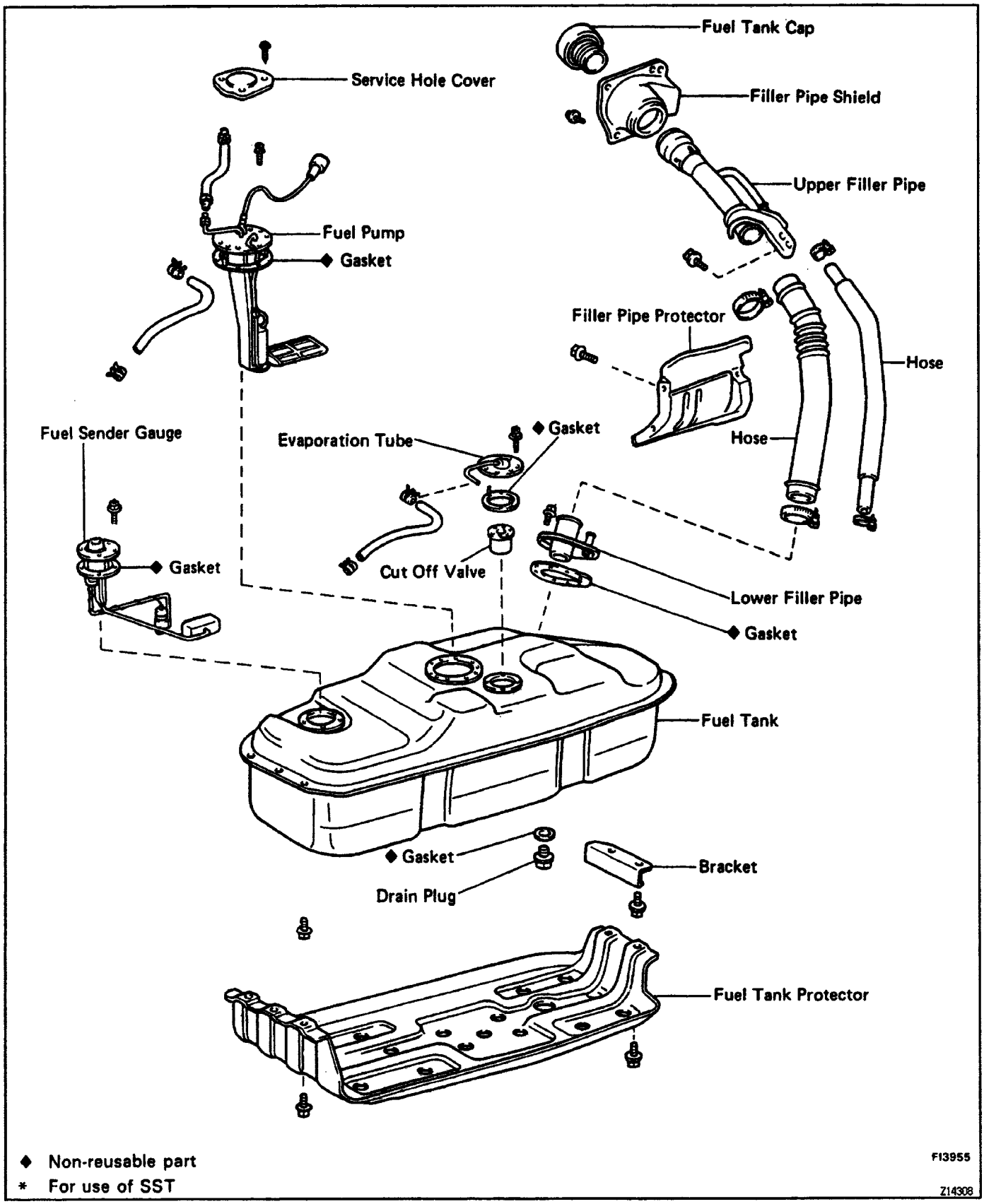

PRECAUTIONS

1. Always use new gaskets when replacing the fuel tank or component part.

2. Apply the proper torque to all parts tightened.

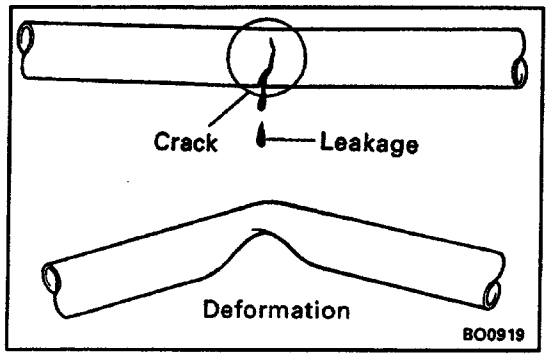

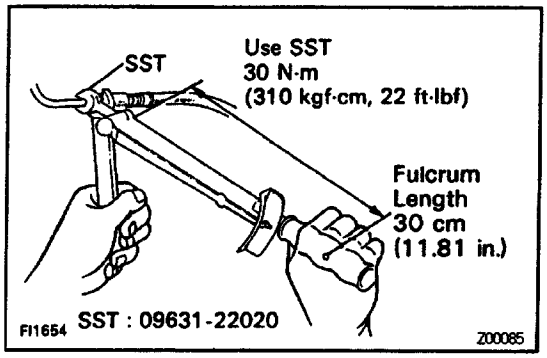

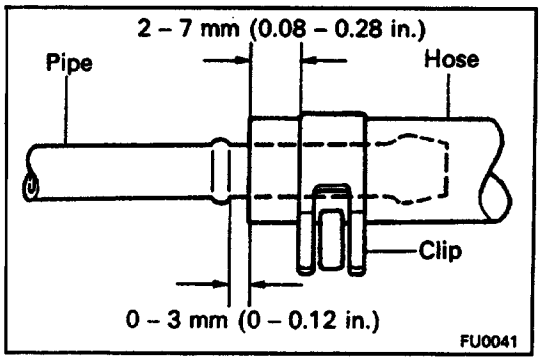

FUEL LINES AND CONNECTIONS INSPECTION

(a) Inspect the fuel lines for cracks or leakage, and all connections for deformations.

(b) Inspect the fuel tank vapor vent system hoses and connections for looseness, sharp bends or damage.

(c) Inspect the fuel tank for deformations, cracks or fuel leakage.

(d) Inspect the filler neck for damage or fuel leakage.

(e) Hose and tube connections are as shown in the illustration.

If a problem is found, repair or replace the parts as necessary.

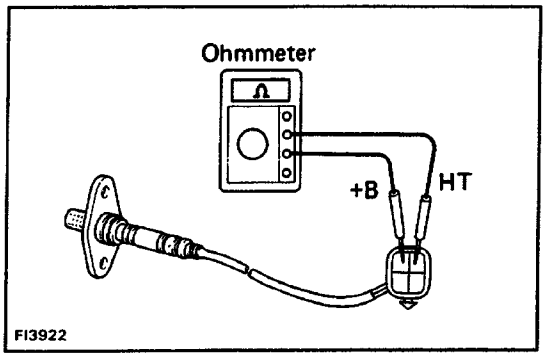

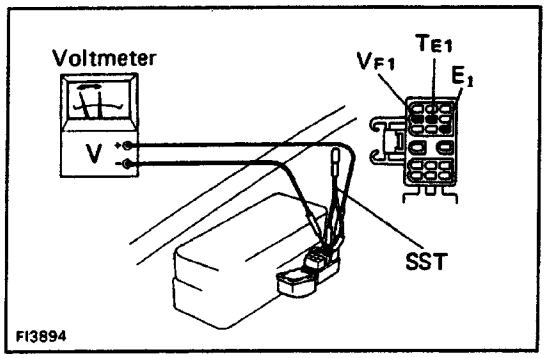

HEATED OXYGEN SENSOR

HEATED OXYGEN SENSOR INSPECTION

1. INSPECT HEATER RESISTANCE OF HEATED OXYGEN SENSOR

Using an ohmmeter, measure the resistance between the terminals +B and HT.

Resistance:

At 20° C (68° F): 5 – 7Ω

If the resistance is not as specified, replace the heated oxygen sensor.

2. INSPECTION OF FEEDBACK VOLTAGE (VF1)

(a) Warm up the engine.

(b) Connect the voltmeter to the DLC1 terminals VF1 and E1.

HINT: Use SST when connecting between terminals TE1 and E1 of the DLC1.

SST 09843–18020

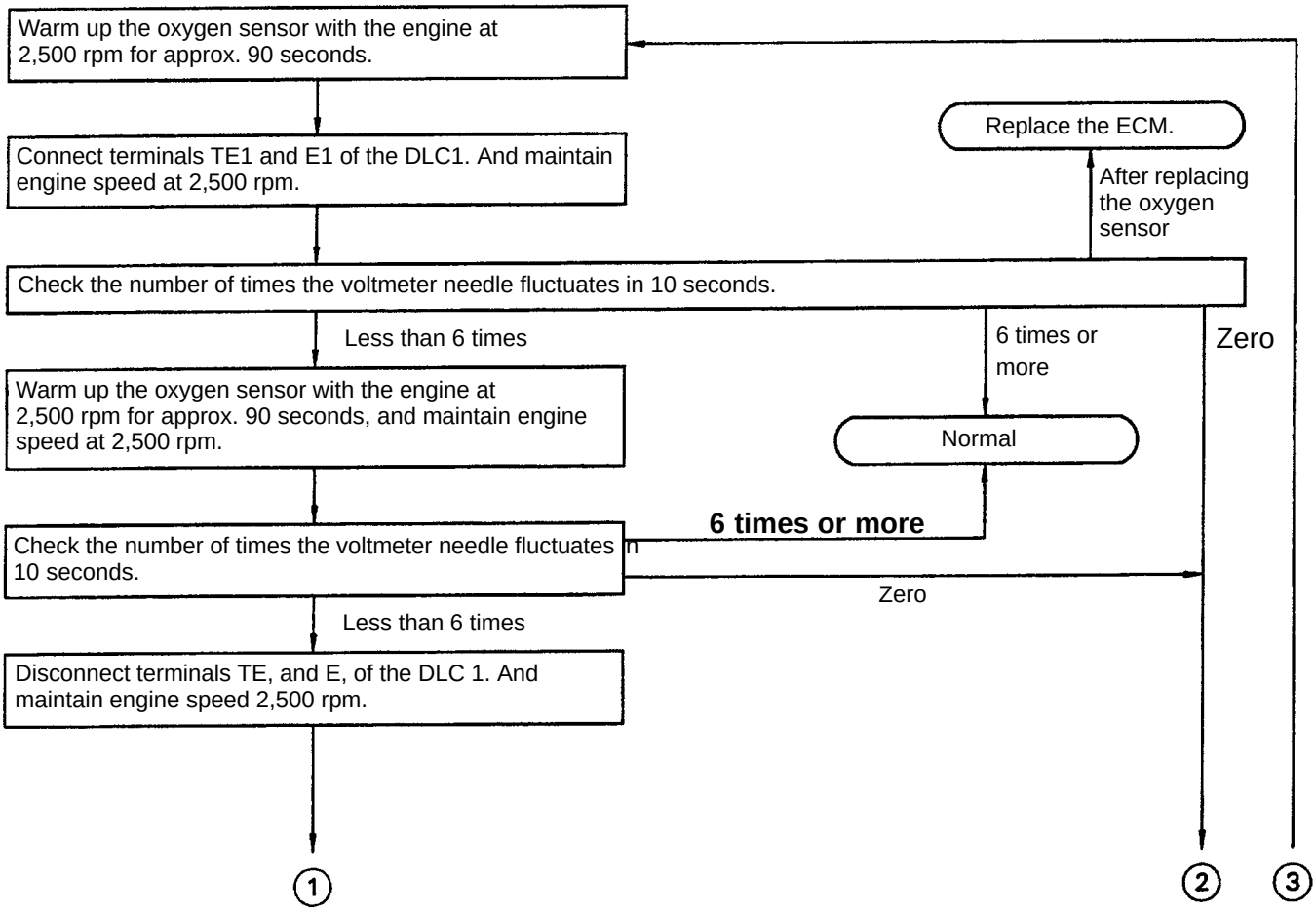

CONTINUED ON PAGE
EG1–198

V01848

CONTINUED FROM PAGE EG1–197

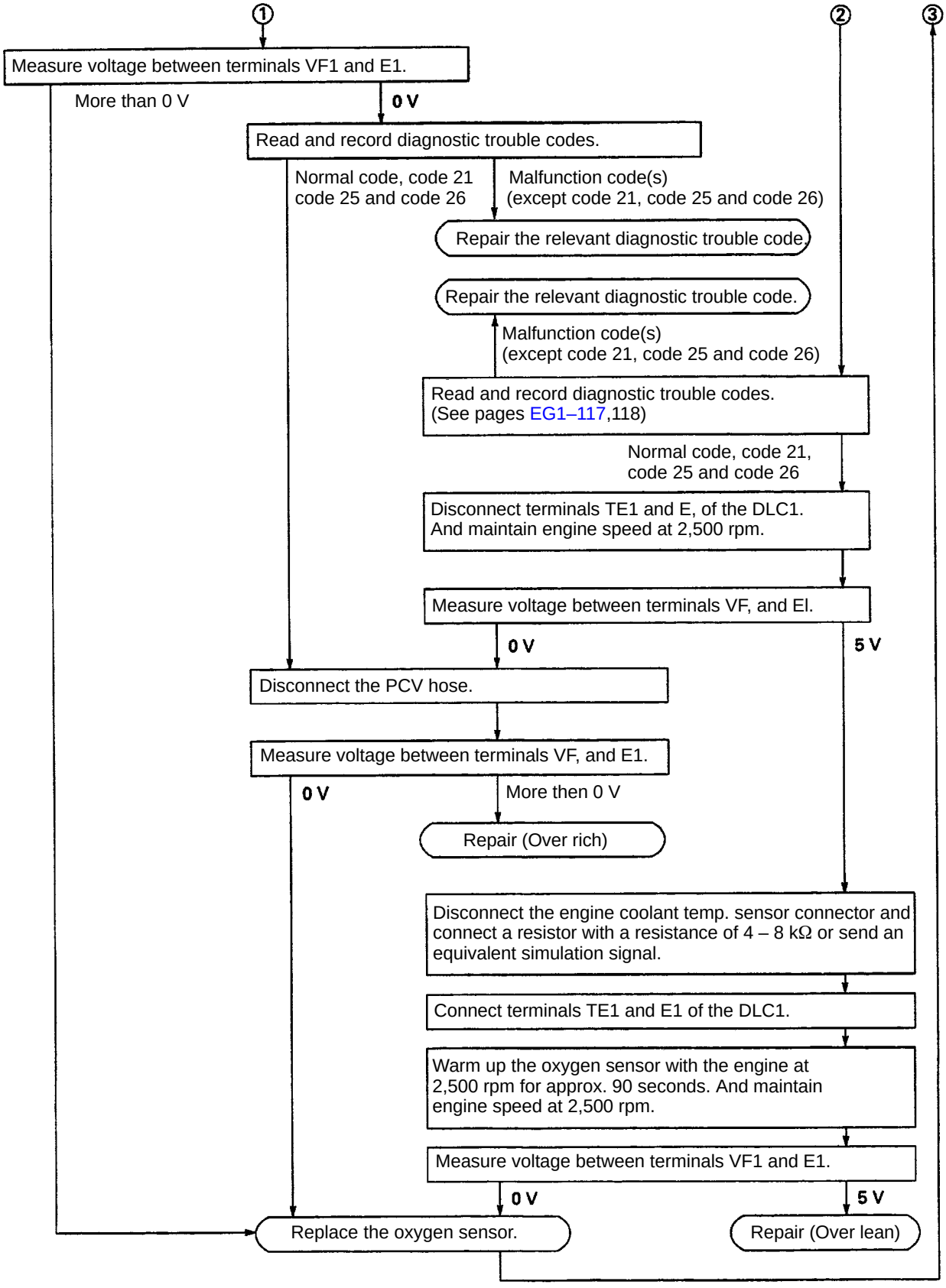

V06091

INJECTOR

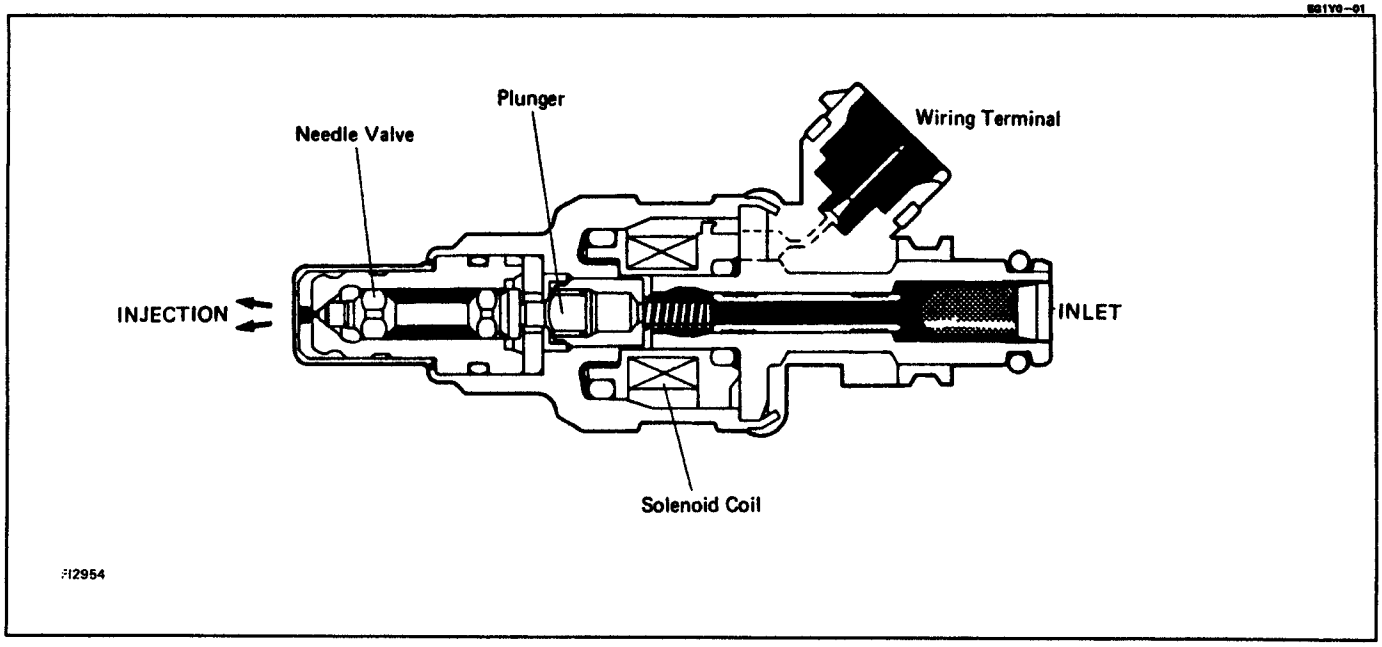

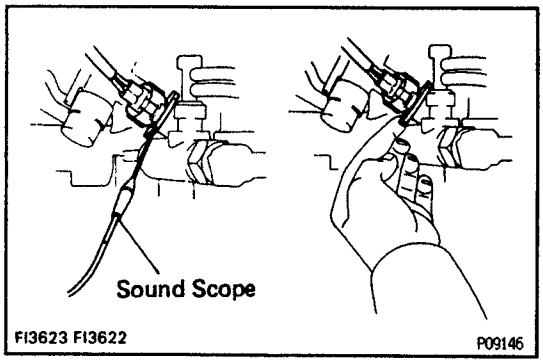

ON–VEHICLE INSPECTION

1. CHECK INJECTOR OPERATION

Check for operating sound from each injector.

(a) With the engine running or cranking, use a sound scope to check that there is normal operating noise in proportion to engine rpm.

(b) If you have no sound scope, you can check the injector transmission operation with you finger.
If no sound or an unusual sound is heard, check the wiring connector, injector or injection signal from ECM.

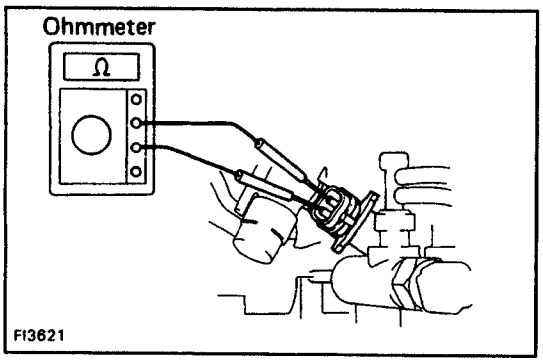

2. MEASURE RESISTANCE OF INJECTOR

(a) Unplug the wiring connector from the injector.

(b) Using an ohmmeter, measure the resistance of both terminals.

Resistance:

13.4–14.2Ω

INJECTORS REMOVAL

1. DISCONNECT NEGATIVE TERMINAL CABLE FROM BATTERY

2. DRAIN COOLANT

3. REMOVE CHAMBER WITH THROTTLE BODY

(See preparation for removal in cylinder head)

4. DISCONNECT WIRES

(See step 17 in preparation for removal in cylinder head)

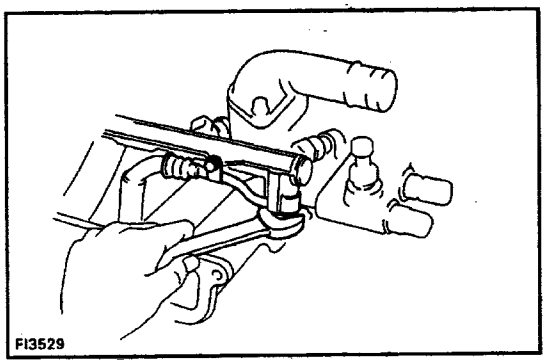

5. DISCONNECT FUEL HOSE FROM DELIVERY PIPE

Remove the bolt, union bolt and 2 gaskets.

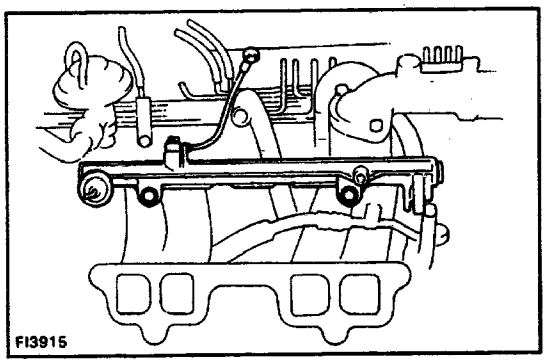

6. REMOVE DELIVERY PIPE WITH INJECTORS

Remove 2 bolts and then remove the delivery pipe with the injectors.

INJECTORS INSPECTION

1. TEST INJECTION OF INJECTOR

CAUTION: Keep injector clear of sparks during the test.

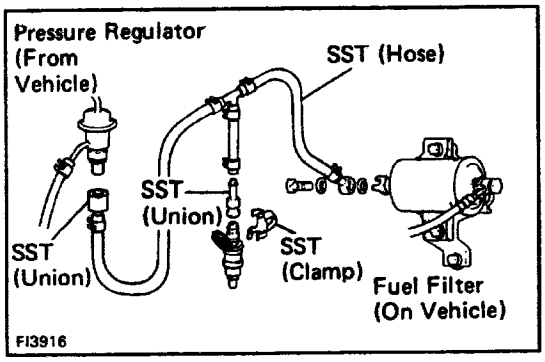

(a) Disconnect the fuel hose from the fuel filter outlet.

(b) Connect SST (Union) to the fuel filter outlet.

SST 09268–41045 (90405–09015)

HINT: Use the vehicle's fuel filter.

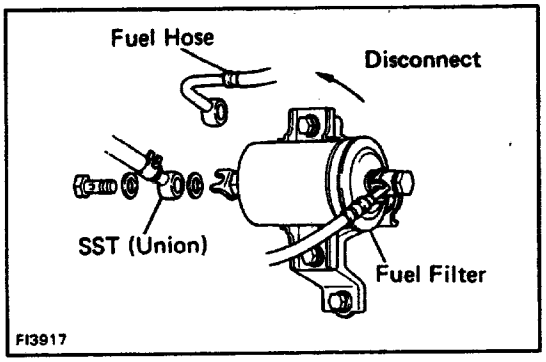

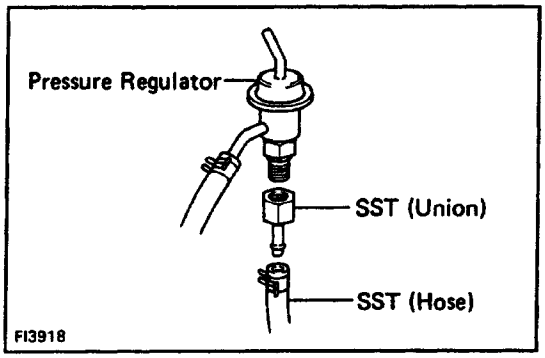

(c) Install SST (Union) to the removed pressure regulator.
SST 09268–41045 (09268–52010)

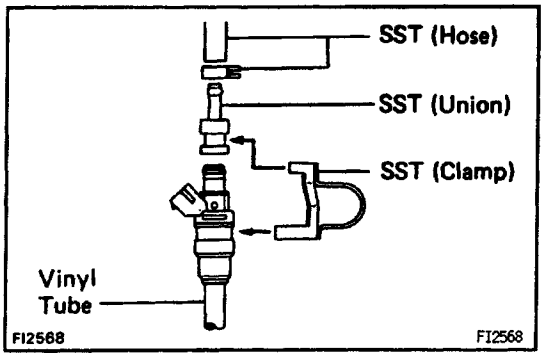

(d) Install SST (Union) to the injector and hold the injector and union with SST (Clamp).
SST 09268–41045
(e) Put the injector into the graduated cylinder.
HINT: Install a suitable vinyl tube onto the injector to prevent gasoline from splashing out.
(f) Connect the battery cable.
(g) Turn the ignition switch ON.
HINT: Do not start the engine.

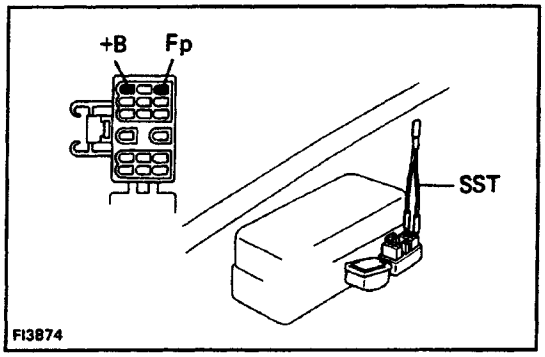

(h) Using SST, connect terminals Fp and +B of the DLC1.
SST 09843–18020
HINT: Fuel pump will operate.

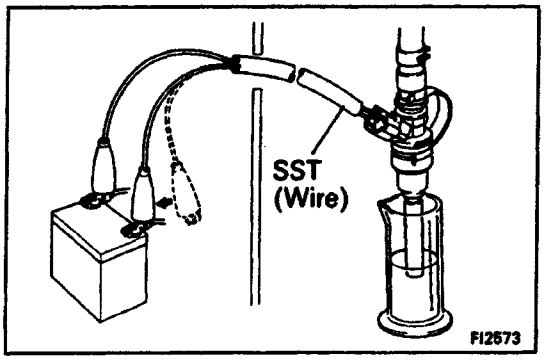

Connect SST (Wire) to the injector and battery for 15 seconds and measure the injection volume with a graduated cylinder. Test each injector 2 or 3 times.
SST 09842–30070
Volume: 45 – 55 cm3/15 sec. (2.7 – 3.4 cu in.)
Difference between each injector:
6 cm3 (0.4 cu in.) or less
If not within specified volume, replace the injector.

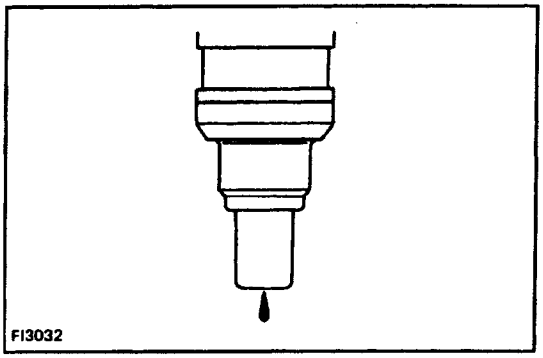

2. CHECK LEAKAGE

(a) In the condition above, disconnect SST from the battery and check for fuel leakage from the injector nozzle.
SST 09842–30060
Fuel drop: One drop or less per minute
(b) Disconnect the battery cable.
(c) Remove SST.

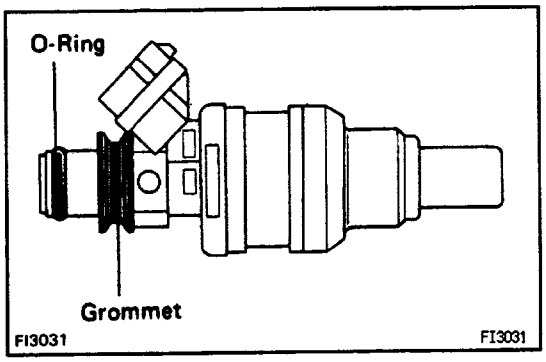

INJECTORS INSTALLATION

1. INSTALL INJECTORS INTO DELIVERY PIPE

(a) Install the grommet and a new O–ring to the injector.

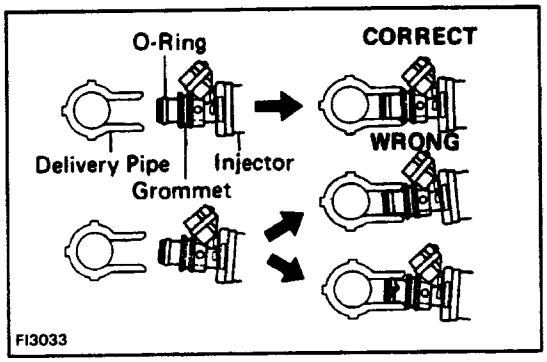

(b) Apply a light coat of gasoline to the O–rings and install the injectors into the delivery pipe.

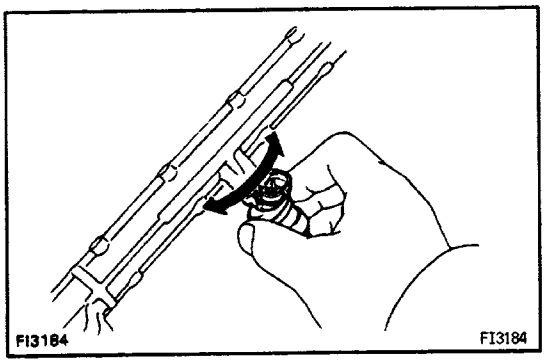

(c) Make sure that the injectors rotate smoothly.

HINT: If the injectors do not rotate smoothly, the O– rings are probably incorrectly installed. Replace the O –rings.

2. INSTALL DELIVERY PIPE WITH INJECTORS

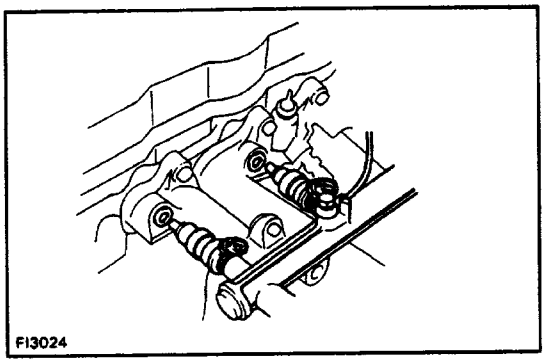

(a) Install the 4 insulators into the injector hole of the intake manifold.

(b) Place the injectors together with the delivery pipe to the manifold.

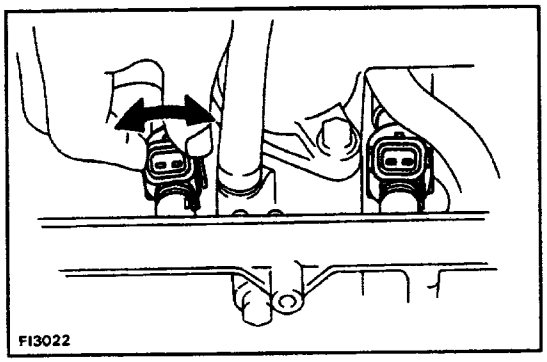

(c) Make sure that the injectors rotate smoothly.

HINT: If the injectors do not rotate smoothly, probable cause may be incorrect installation of O–rings. Re. place O – rings again after removing the injectors.

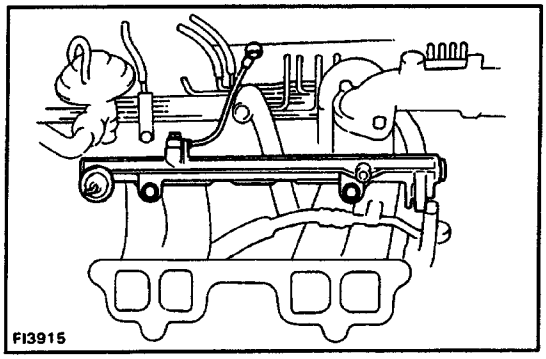

(d) Install and torque the bolts.
Torque: 17 N–m (175 kgf–cm. 13 ft–lbf)

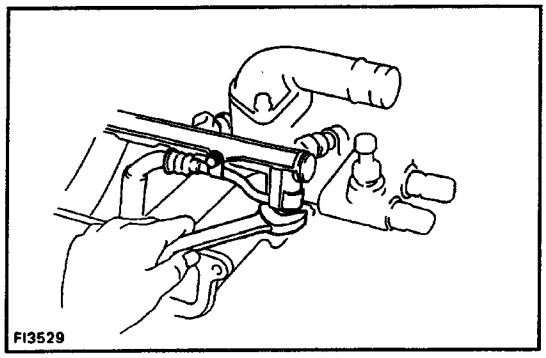

3. CONNECT FUEL HOSE TO DELIVERY PIPE
(a) Install the fuel hose with a bolt.
(b) Install the union bolt and new gaskets. Torque the union bolt.
Torque: 44 N–m (450 kgf–cm, 33 ft–lbf)

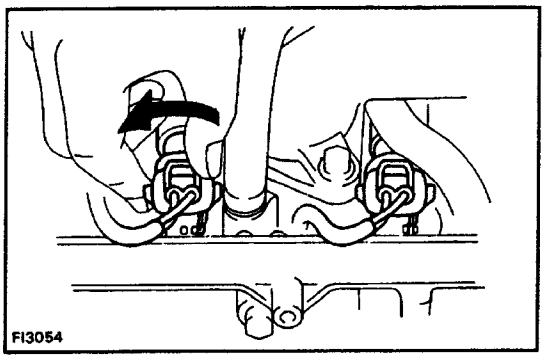

4. CONNECT WIRES
(See step 5 in after installation in cylinder head)
Turn the injector so that the injector positioning guide is aligned with the positioning rib of the delivery pipe.

5. INSTALL CHAMBER WITH THROTTLE BODY
(See steps 7 to 14 in after installation in cylinder head)

6. FILL WITH COOLANT
(See step in coolant check and replacement in Cooling System)

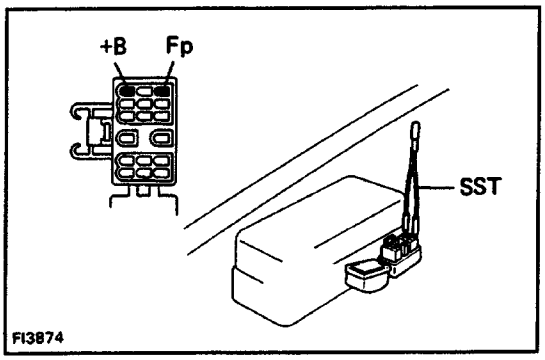

7. CHECK FOR FUEL LEAKAGE
(a) With the ignition switch ON, use SST to connect terminals Fp and +B of the DLC1.
SST 09843–18020
(b) Check for fuel leakage.
(c) Remove SST from the DLC1.

PRECAUTION

1. Before working on the system, disconnect the negative terminal (–) cable from the battery.

HINT: Any diagnostic trouble code retained by the computer will be erased when the negative (–) terminal cable is removed from the battery.
Therefore, if necessary, read the diagnostic trouble code before removing the negative (–) terminal cable from the battery.

2. Do not smoke or work near an open flame when working on the fuel system.
3. Keep gasoline away from rubber or leather parts.

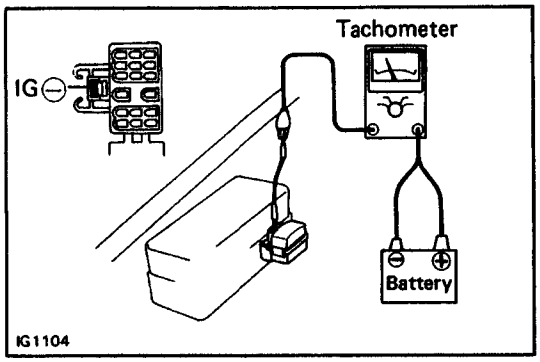

MAINTENANCE PRECAUTIONS

1. CHECK CORRECT ENGINE TUNE–UP

2. PRECAUTION WHEN CONNECTING GAUGE

(a) When a tachometer is connected to the system, connect the tachometer test probe to the IG(–) terminal of the DLC1.

(b) Use the battery as the power source for the timing light, tachometer, etc.

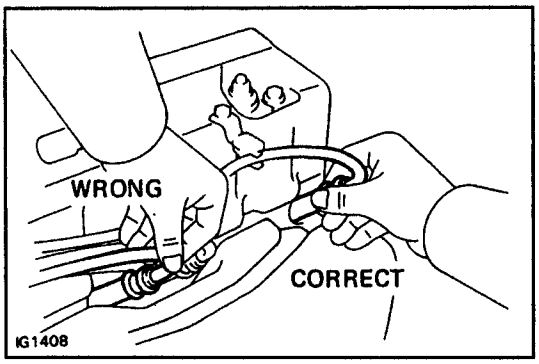

3. IN EVENT OF ENGINE MISFIRE, THE FOLLOWING PRECAUTIONS SHOULD BE TAKEN

(a) Check proper connection of battery terminals, etc.

(b) Handle high–tension cords carefully.

(c) After repair work, check that the ignition coil terminals and all other ignition system lines are reconnected securely.

(d) When cleaning the engine compartment, be especially) careful to protect the electrical system from water.

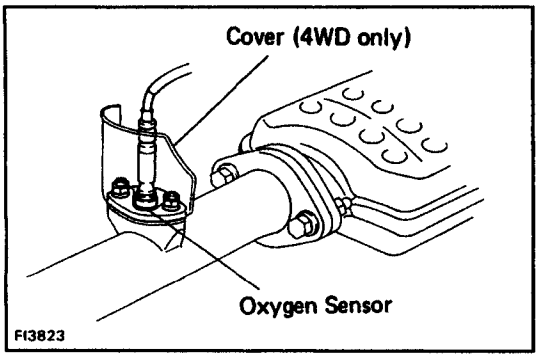

4. PRECAUTIONS WHEN HANDLING OXYGEN SENSOR

(a) Do not allow the oxygen sensor to drop or hit against an object.

(b) Do not allow the sensor to come into contact with water.

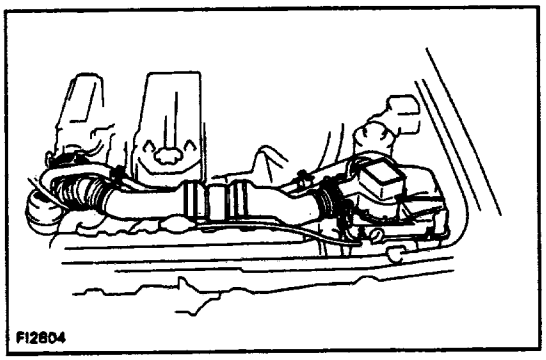

AIR INDUCTION SYSTEM

1. Separation of the engine oil dipstick, oil filler cap, PCV hose, etc. may cause the engine to run out of tune.
2. Disconnection, looseness or cracks in the parts of the air induction system between the air flow meter and cylinder head will cause air suction and cause the engine to run out of tune.

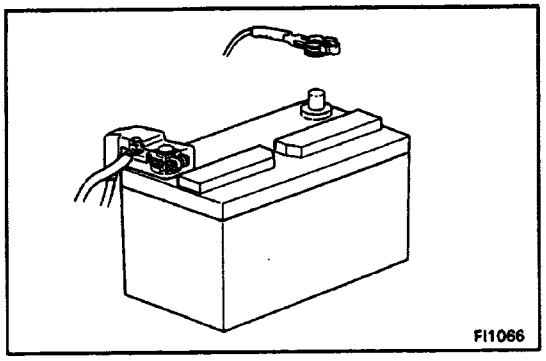

ELECTRONIC CONTROL SYSTEM

1. Before removing MFI wiring connectors, terminals, etc., first disconnect power by either turning the ignition switch OFF or disconnecting the negative (–) terminal cable from the battery.
2. When installing a battery, be especially careful not to incorrectly connect the positive and negative cables.
3. Do not permit parts to receive a severe impact during removal or installation. Handle all MFI parts carefully especially the ECM.
4. Take great care during troubleshooting as there are numerous transistor circuits and even slight terminal contact can cause further troubles.
5. Do not open the ECM cover.
6. When inspecting during rainy weather, take care to prevent entry of water. Also, washing the engine compartment, prevent water from getting on the MFI parts and wiring connectors.
7. Parts should be replaced as an assembly.
8. Sufficient care is required when pulling out and inserting wiring connectors.
   (a) To pull the connector out, release the lock and pull on the connector.

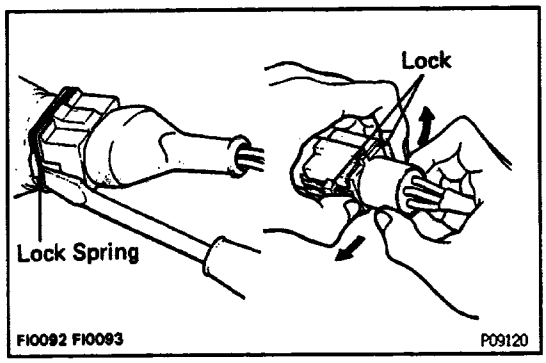

(b) Fully insert the connector and check that it is locked.

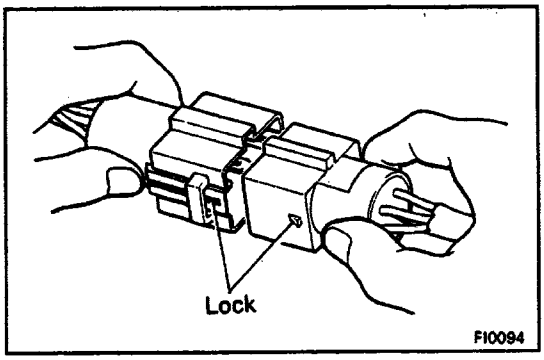

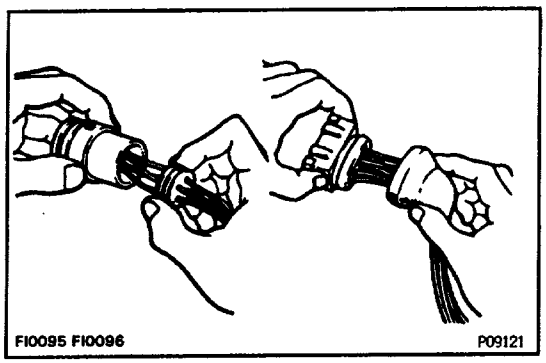

9. When inspecting a connector with a volt/ohmmeter.

(a) Carefully take out the water– proofing rubber if it is a water–proof type connector.

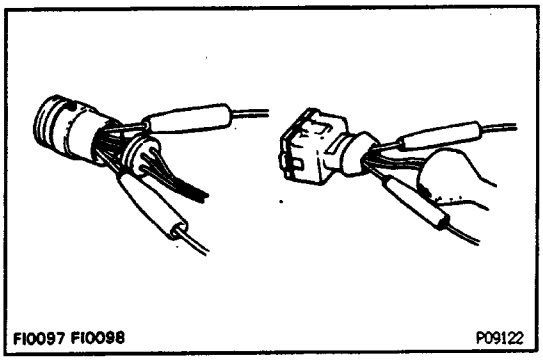

(b) Insert tester probe into the connector from the wiring side when checking the continuity, amperage or voltage.

(c) Do not apply unnecessary force to the terminal.

(d) After the check, securely install the water–proofing rubber on the connector.

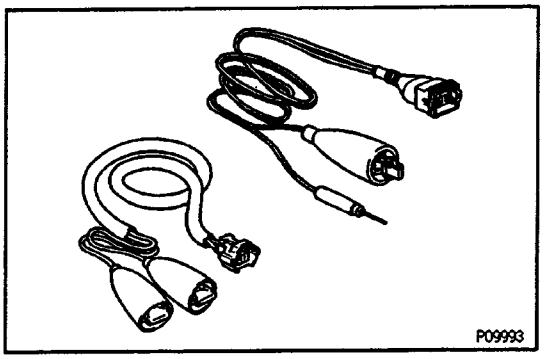

10. Use SST for inspection or testing of the injector, cold start injector or their wiring connectors.
SST 09842 – 30050 and 09842 – 30070

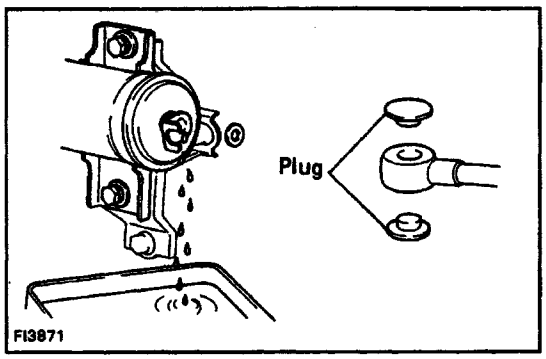

FUEL SYSTEM

1. When disconnecting the connection of the high fuel pressure line, a large amount of gasoline may come out so observe the following procedure:
   (a) Put a container under the connection.
   (b) Slowly loosen the connection.
   (c) Disconnect the connection.
   (d) Plug the connection with a rubber plug.
2. When connecting the flare nut or union bolt on the high pressure pipe union, observe the following procedure:
   Union bolt type:
   (a) Always use a new gasket.
   (b) Tighten the union bolt by hand.
   (c) Torque the bolt to the specified torque.
   Torque: 30 N–m (310 kgf–cm. 22 ft–lbf)

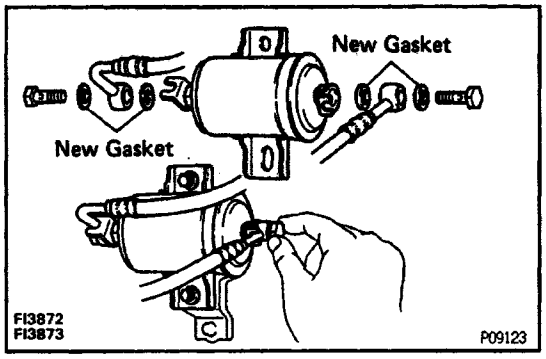

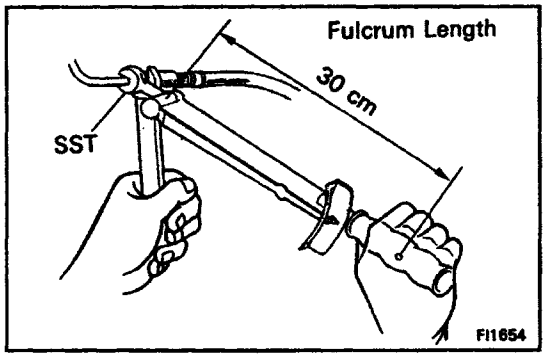

Flare nut type:
   (a) Apply a light coat of engine oil to the flare and tighten the flare nut by hand.
   (b) Then using SST, tighten the nut to the specified torque.
   SST 09631 –22020
   Torque: 27 N–m (280 kgf–cm, 20 ft–lbf)

HINT: Use a torque meter with a fulcrum length of 30 cm (11.81 in.).

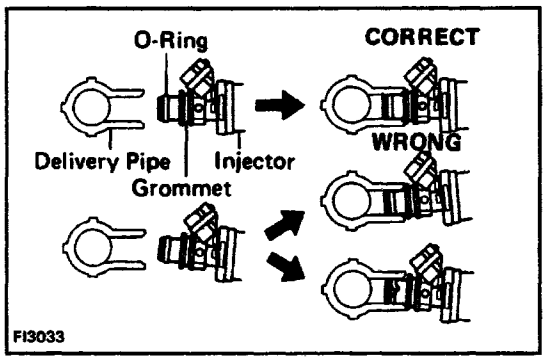

3. Take the following precautions when removing and installing the injectors.
   (a) Never re–use the O–ring.
   (b) When placing a new 0 –ring on the injector, take care not to damage it in any way.
   (c) Lubricate the 0–ring spindle oil or gasoline before installing – never use engine, gear or brake oil.

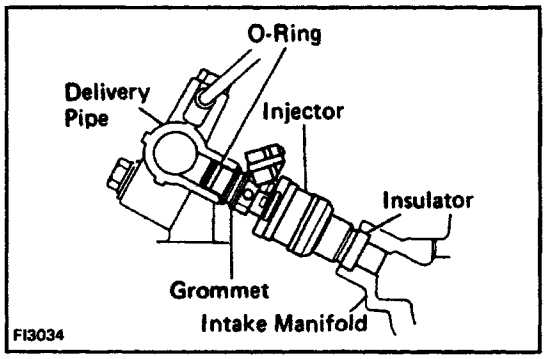

4. Install the injector to the delivery pipe and intake manifold as shown in the illustration.

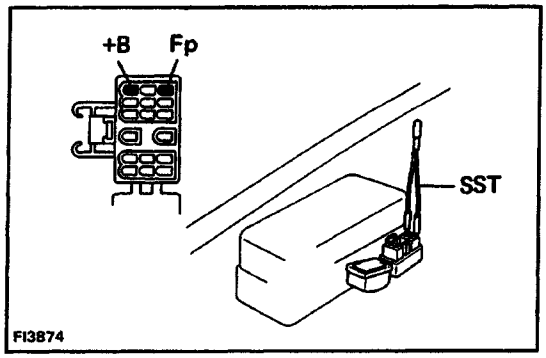

5. Check that there are no fuel leaks after doing any maintenance on the fuel system.

(a) With engine stopped, turn the ignition switch ON.

(b) Using SST, connect terminals Fp and B of the DLC1.
SST 09843–18020

HINT: The DLC1 is located near the No. 2 relay block.

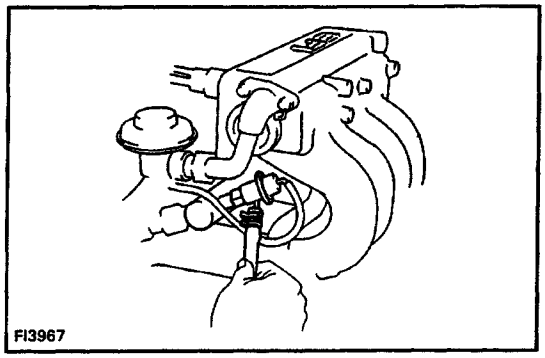

(c) When the pressure regulator fuel return hose (shown in the illustration at left), is pinched, the pressure within the high pressure line will rise to approx. 392 kPa (4 kgf/cm2, 57 psi). In this state, check to see that there are no leaks from any part of the fuel system.

NOTICE: Always pinch the hose. Avoid bending the hose as it may cause the hose to crack.

PREPARATION

SST (SPECIAL SERVICE TOOLS)

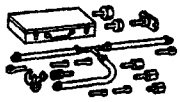	**09268–41045** Injection Measuring Tool Set	
	**(09268–41080)** No.6 Union	
	**(09268–52010)** Injection Measuring Attachment	
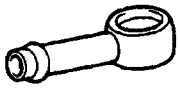	**(90405–09015)** No. 1 Union	
	**09268–45012** EFI Fuel Pressure Gauge	
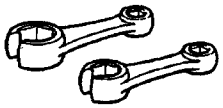	**09631–22020** Power Steering Hose Nut 14 x 17 mm Wrench Set	Fuel line flare nut
	**09842–30070** Wiring 'F' EFI Inspection	
	**09843–18020** Diagnosis Check Wire	

RECOMMENDED TOOLS

	**09082–00050** TOYOTA Electrical Tester set	
	**09200–00010** Engine Adjust Kit.	
	**09258–00030** Hose Plug Set.	Plug for the vacuum hose, fuel hose etc.

EQUIPMENT

Graduated cylinder	Injector
Carburetor cleaner	Throttle body
Sound scope	Injector
Tachometer	
Torque wrench	
Vacuum gauge	
Soft brush	Throttle body

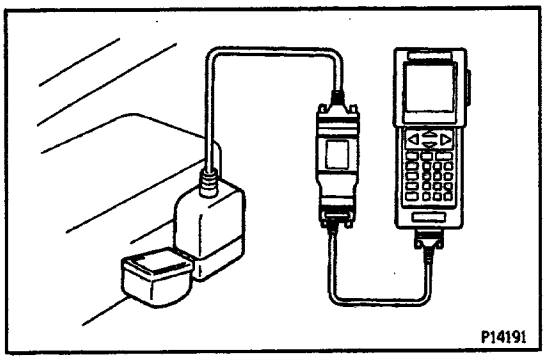

REFERENCE VALUE OF ECM DATA

HINT: ECM data can be monitored by TOYOTA hand –held tester.

1. Hook up the TOYOTA hand–held tester to DLC1.
2. Monitor ECM data by following the prompts on the tester screen.

Please refer to the TOYOTA hand–held tester operator's manual for further details.

REFERENCE VALUE FOR ECM DATA (Engine at normal operating temp.)

Item	Inspection condition	Reference value
INJECTOR	Engine cold to hot Engine idling at normal operating temp. *1	Gradually decreases Approx. 2 msecs
IGNITION	Increase engine rpm	Gradually increases
ENGINE SPEED	RPM kept stable (Comparison with tachometer)	No great changes
VAF	Engine idling . Increase engine speed	Approx.6 nf/h Gradually increases
ECT	Engine at normal operating temp.	75 – 95˚ C (167 – 203˚ F) *2
THROTTLE	Closed throttle position Wide open throttle From closed throttle position to wide open throttle	Below 5˚ Above 70* Gradually increase
SPD	During driving (Comparison with speedometer)	No large differences
TARGET A / F No.1	Engine idling at normal operating temp.	2.50 ± 1.25 V *3
A/F FB No. 1	RPM stable at 2500 rpm with normal operating temp.	ON
A/F FB No.2	RPM stable at 2500 rpm with normal operating temp.	ON
STA SIGNAL	During cranking	ON
KNOCK F6	Depress throttle pedal suddenly during idling	ON
CTP SIGNAL	Closed throttle position	ON
PNP SIGNAL *4	When shifting from 'N' position into a position other than 'N'	GEAR
Ox No. 1	RPM stable at 2500 rpm with normal operating temp.	RICH LEAN is repeated

*1: All accessories and A/C are switched OFF.
*2: If the engine coolant temp. sensor circuit is open or shorted, the ECM assumes an engine coolant temp. value of 80˚C (176˚ F).
*3: When feedback control is forbidden, 0 V is displayed.
*4: A/T only.

SERVICE SPECIFICATIONS

SERVICE DATA

Pressure regulator	Fuel pressure	at No vacuum	265 – 304 kPa 2.7 – 3.1 kgf/cm² 38 – 44 psi	
Cold start injector	Resistance Fuel leakage		2 – 4 Ω One drop or less per minute	
Injector	Resistance Injection volume Difference between each injector Fuel leakage		13.4 – 14.2 Ω 45 – 55 cm³/15 sec. (2.7 – 3.4 cu in.) 6 cm³ (0.37 cu in.) or less One drop or less per minute	
Volume Air Flow Meter	Resistance	E_2 – Vs	20 – 400 Ω (Measuring plate fully closed) 20 – 1,200 Ω (Measuring plate fully open)	
		E_2 – Vc	100 – 300 Ω	
		E_2 – V_B	200 – 400 Ω	
		E_1 – Fc	∞ (Measuring plate fully closed) 0 Ω (Measuring plate open)	
		E_2 – THA	10 – 20 kΩ (–20°C, –4°F) 4 – 7 kΩ (0°C, 32°F) 2 – 3 kΩ (20°C, 68°F) 0.9 – 1.3 kΩ (40°C, 104°F) 0.4 – 0.7 kΩ (60°C, 140°F)	
Throttle body	Throttle valve fully closed angle		6°	
Throttle position sensor	Clearance between lever and stop screw		Between terminals	Resistance
	0 mm	0 in.	VTA – E_2	0.47 – 6.1 kΩ
	0.57 mm	0.0224 in.	IDL – E_2	2.3 kΩ or less
	0.85 mm	0.0335 in.	IDL – E_2	Infinity
	Throttle valve fully open position		VTA – E_2	3.1 – 12.1 kΩ
	–		Vcc – E_2	3.9 – 9.0 kΩ
Start injector time switch	Resistance	STA – STJ	30 – 50 Ω (below 10°C, 50°F) 65 – 90 Ω (above 30°C, 86°F)	
		STA – Ground	30 – 90 Ω	
Engine coolant temp. sensor	Resistance		10 – 20 kΩ (–20°C, –4°F) 4 – 7 kΩ (0°C, 32°F) 2 – 3 kΩ (20°C, 68°F) 0.9 – 1.3 kΩ (40°C, 104°F) 0.4 – 0.7 kΩ (60°C, 140°F) 0.2 – 0.4 kΩ (80°C, 176°F)	
VSV (FPU)	Resistance	at 20°C (68°F)	30 – 50 Ω	

Specifications (Cont'd)

Oxygen sensor heater	Resistance at 20°C (68°F)		6 – 7 Ω	
EGR gas temperature sensor	Resistance		69 – 89 kΩ (55°C, 122°F) 11 – 15 kΩ (100°C, 212°F) 2 – 4 kΩ (150°C, 302°F)	
Fuel cut rpm	Fuel cut rpm 2WD M/T (stop light switch ON) Others Fuel return rpm 2WD M/T (stop light switch ON) Others .		1,300 rpm 1,900 rpm 1,000 rpm 1,600 rpm	
ECM (Voltage)	HINT: Do all voltage and resistance measurements witch the ECM connected. • Verify that the battery voltage is 11 V or above when the ignition switch is ON. The testing probes must not make contact with the ECM oxygen VF terminals.			
	Terminals	**STD voltage**	**Condition**	
	BATT – E_1	9 – 14	–	
	+B – E_1		Ignition SW ON	
	+B – E_1			
	IDL – E_2 (E_{21})	9 – 14	Ignition SW ON	Throttle valve open
	Vcc – E_2 (E_{21})	4.5 – 5.5		–
	VTA – E_2 (E_{21})	0.3 – 0.8		Throttle valve fully open
		3.2 – 4.9		Throttle valve fully open
	Vc – E_2 (E_{21})	6 – 10	Ignition SW ON	–
	Vs – E_2 (E_{21})	0.5 – 2.5		Measuring plate fully closed
		5 – 10		Measuring plate fully open
		2 – 8	Idling	
	THA – E_2 (E_{21})	0.5 – 3.4	Ignition SW ON	Intake air temperature 20°C (68°F)
	THW – E_2 (E_{21})	0.2 – 1.0		Coolant temperature 8o°C (176°F)
	STA – E_1	6 – 12	Ignition SW START position	
	No.10 – E_{01} No.20 – E_{02}	9 – 14	Ignition SW ON	
	IGt – E_1	0.7 – 1.0	Cranking or idling	
	W – E_1	9 – 14	No trouble (MIL off) and engine running	
	STJ – E_1	6 – 12	Ignition SW START position	Coolant temperature 80°C (176°F)
	STP – E_1	7.5 – 14	Stop light switch ON	

Specifications (Cont'd)

ECM (Resistance)	Terminals	Resistance (kΩ)	Condition
	IDL – E_2 (E_{21})	Infinity	Throttle valve open
		2.3 or less	Throttle valve fully closed
	VTA – E_2 (E_{21})	3.1 – 12.1	Throttle valve fully open
		0.47 – 6.1	Throttle valve fully closed
	Vcc – E_2 (E_{21})	3.9 – 9.0	–
	THA – E_2 (E_{21})	2 – 3	Intake air temperature 20 °C (68 °F)
	THW – E_2 (E_{21})	0.2 – 0.4	Coolant temperature 80 °C 0 (176 °F)
	+B – E_2 (E_{21})	0.2 – 0.4	–
	Vc – E_2 (E_{21})	0.1 – 0.3	–
	Vs – E_2 (E_{21})	0.02 – 0.4	Measuring plate fully closed
		0.02 – 1.00	Measuring plate fully open
	Ne – E_1	0.185 – 0.275	Cold
		0.240 – 0.325	Hot
	STJ – E_1	Infinity	–
	FPU – E_1	Infinity	–
	HT – E_1	Infinity	–

TORQUE SPECIFICATIONS

Part tightened	N–m	kgf–cm	ft–lbf
Fuel hose x Fuel filter	30	310	22
Fuel hose x Fuel main tube	30	310	22
Fuel filter x Fuel filter bracket	19	195	14
Delivery pipe x Pressure regulator	30	300	22
Delivery pipe x Intake manifold	19	195	14
Delivery pipe x Fuel tube	44	450	33
Delivery pipe x Fuel pipe	17	175	13
Fuel pipe x Cold start injector	17	175	13
Air intake chamber x Cold start injector	7.8	80	69 in.·lbf
Air intake chamber x Throttle body	19	195	14
Fuel pump	3.9	40	35 in.·lbf
Fuel drain plug	6.4	65	56 in.·lbf
Fuel tank x Body	29	300	22

SUB HEATED OXYGEN SENSOR (California only)

SUB HEATED OXYGEN SENSOR INSPECTION

1. INSPECT SUB HEATED OXYGEN SENSOR

HINT: Inspect only when code No.27 is displayed.

(a) Cancel the diagnostic trouble code.
(See page EG1–122)

(b) Warm up the engine until it reaches normal operating temperature.

(c) M/T;

Drive for 5 minutes or more at a speed less than 80 km/h (50 mph) in 4th or 5th gear.

A/T:

Drive for 5 minutes or more at a speed less than 80 km/h (50 mph) in ”D” position.

(d) Following the conditions in step (c), fully depress on the accelerator pedal for 2 seconds or more.

(e) Stop the vehicle and turn the ignition switch OFF.

(f) Carry out steps (b), (c) and (d) again to test acceleration.

If code No.27 appears again, check the sub heated oxygen sensor circuit. If the circuit is normal, replace the sub heated oxygen sensor.

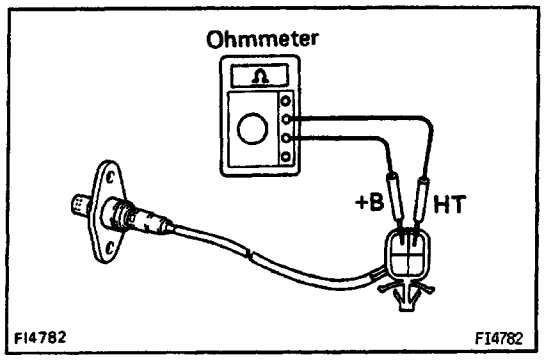

2. INSPECT HEATER RESISTANCE OF SUB HEATED OXYGEN SENSOR

Using an ohmmeter, measure the resistance between terminals +B and HT.

Resistance:

At 20° C (68° F): 11 – 16 Ω

If resistance is not as specified, replace the sub heated oxygen sensor.

THROTTLE BODY

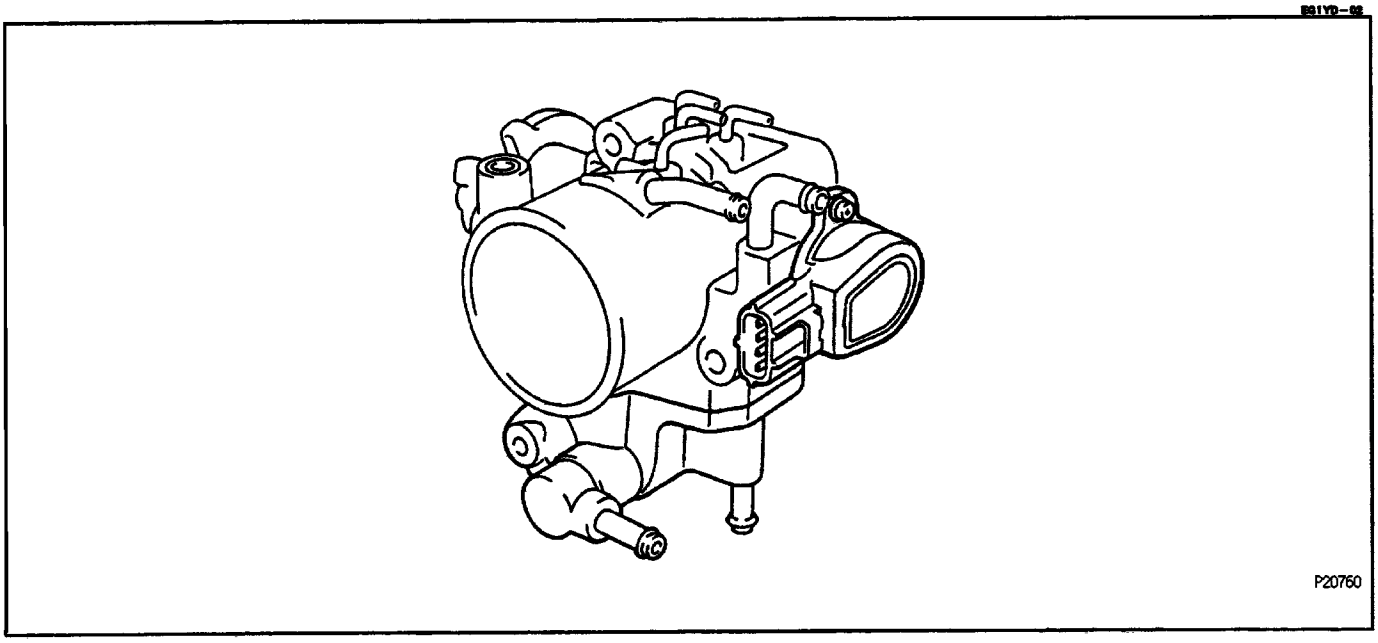

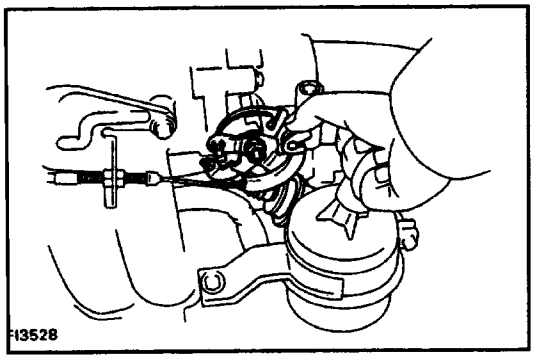

ON –VEHICLE INSPECTION

1. INSPECT THROTTLE BODY

(a) Check that the throttle linkage moves smoothly.

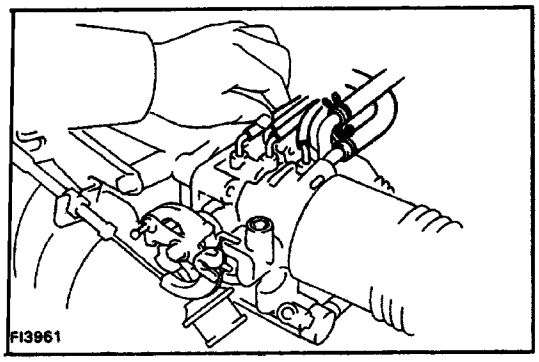

(b) Check the vacuum at each port.

- Start the engine.
- Check the vacuum with your finger.

Port name	At idle	At 3,500 rpm
E	**No vacuum**	**Vacuum**
R	**No vacuum**	**Vacuum**
P	**No vacuum**	**Vacuum**

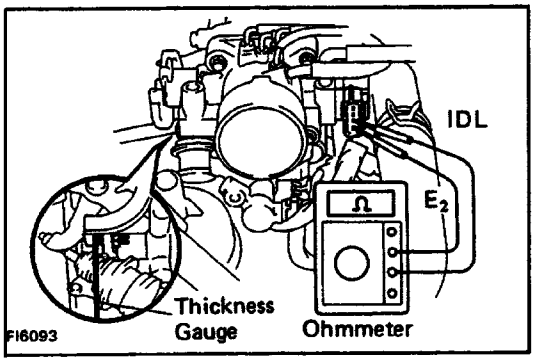

2. INSPECT THROTTLE POSITION SENSOR

Check the resistance between the terminals.

- Unplug the connector from the sensor.
- Insert a thickness gauge between the throttle stop screw and stop lever.
- Using an ohmmeter, check the resistance between each terminal.

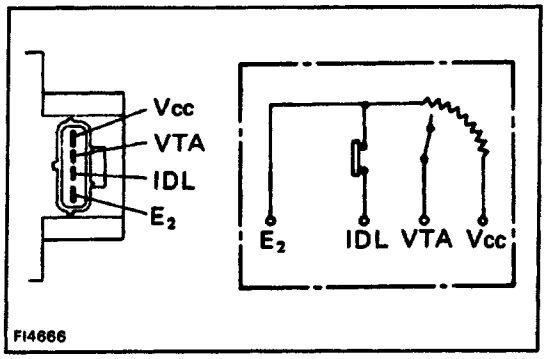

Clearance between lever and stop screw	Between terminals	Resistance
0 mm (0 in.)	VTA – E2	0.47 – 6.1 kΩ
0.57 mm (0.0224 in.)	IDL – E2	2.3 kΩ or less
0.85 mm (0.0335 in.)	IDL – E2	Infinity
Throttle valve fully open	VTA – E2	3.1 – 12.1 kΩ
–	Vcc – E2	3.9 – 9.0 kΩ

3 M/T:

INSPECT DASH POT (DP)

A. Warm up engine

Allow the engine to warm up to normal operating temperature.

B. Check idle speed and adjust, if necessary

(See step 15 in maintenance operations in Maintenance)

Idle speed:

750 rpm

C. Remove cap, filter, and separator from DP

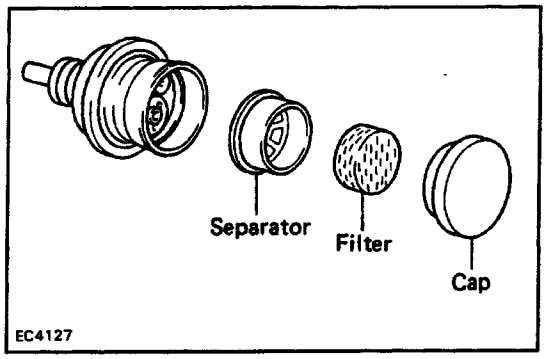

D. Check and adjust dash pot (DP) setting speed

(a) Maintain engine speed at 2,500 rpm.

(b) Plug the VTV hole with your finger.

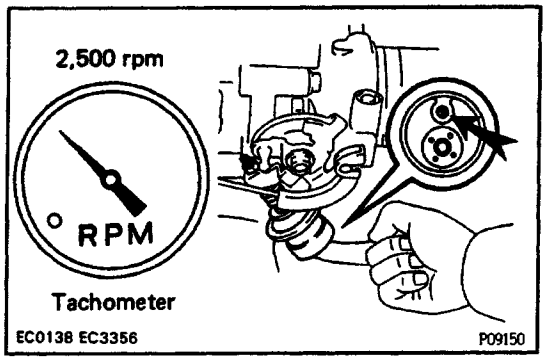

(c) Release the throttle valve.

(d) Check the DP is set.

DP setting speed: 2,000 rpm

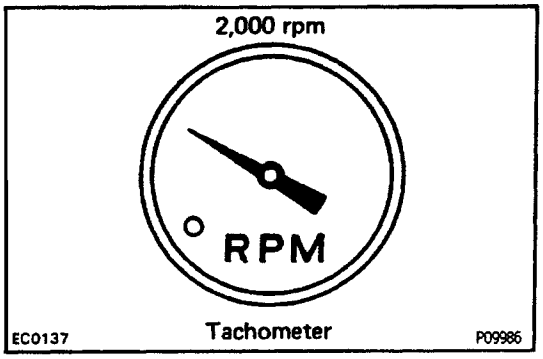

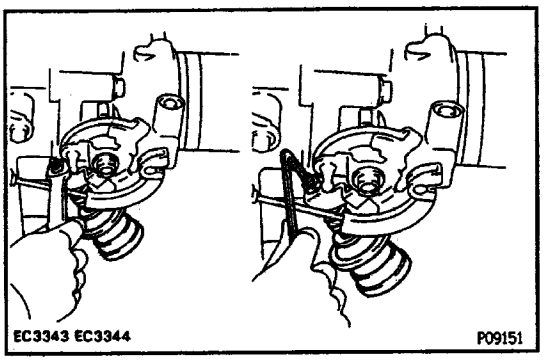

(e) If not as specified, adjust with the DP adjusting screw.

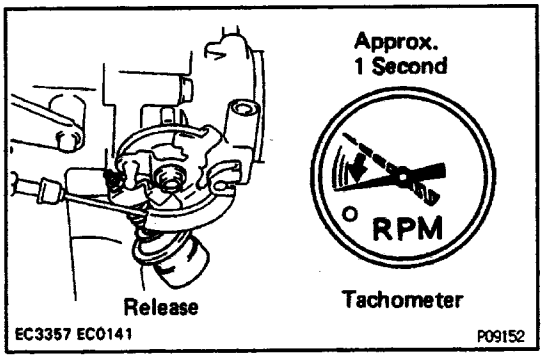

E. Check operation of VTV

(a) Set the DP setting speed in the same procedure as above (a) to (c).

(b) Remove your finger from the hole and check that the engine returns to idle speed in approx. 1 second.

F. Reinstall DP separator, filter and cap

HINT: Install the filter with the coarser surface facing the atmospheric side (outward).

4. A/T:

INSPECT THROTTLE OPENER

A. Warm up engine

Allow the engine to warm up to normal operating temperature.

B. Check idles speed

Idle speed:

750 ± 50 rpm

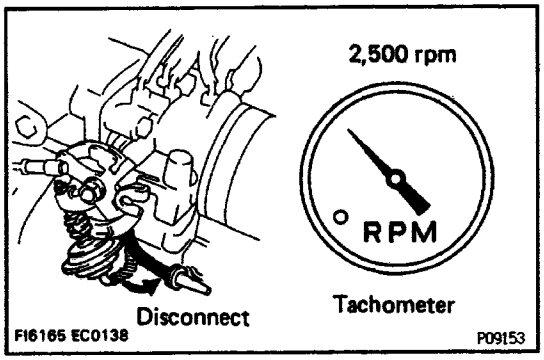

C. Check and adjust throttle opener setting speed

(a) Disconnect the vacuum hose from the throttle opener, and plug the hose end.

(b) Maintain the engine at 2,500 rpm.

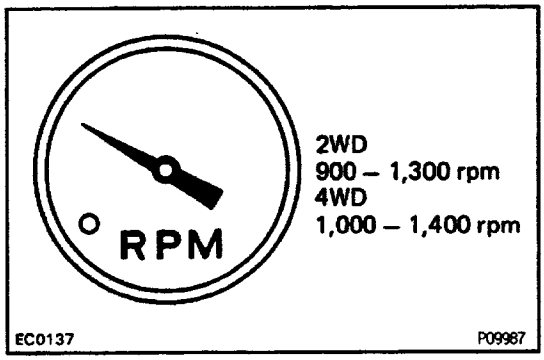

(c) Release the throttle valve.

(d) Check that the throttle opener is set.

Throttle opener setting speed:

900 – 1,300 rpm

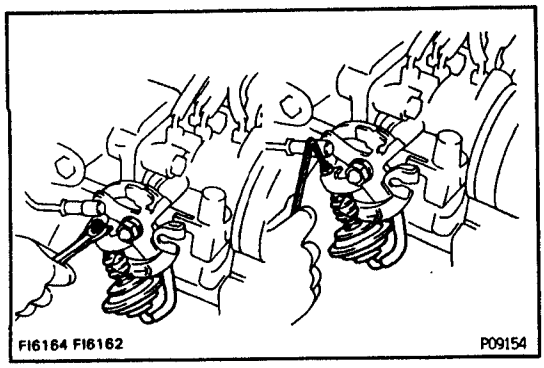

(e) If not as specified, adjust with the throttle opener adjusting screw.

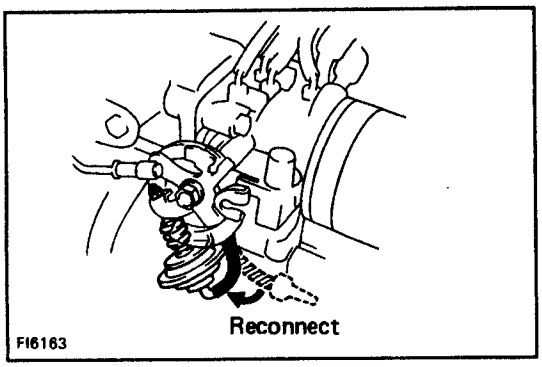

(f) Reconnect the vacuum hose to the throttle opener.

THROTTLE BODY REMOVAL

1. REMOVE INTAKE AIR CONNECTOR

2. DRAIN COOLANT

3. DISCONNECT ACCELERATOR CABLE

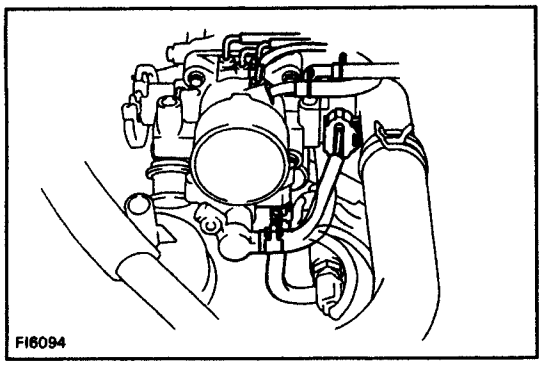

4. DISCONNECT FOLLOWING HOSES:

(a) w/ A/C:
A/C idle up hose.
(b) PCV hose
(c) No. 2 and No. 3 water bypass hoses.
(d) Label and disconnect the emission control hoses.

5. DISCONNECT THROTTLE SENSOR CONNECTOR

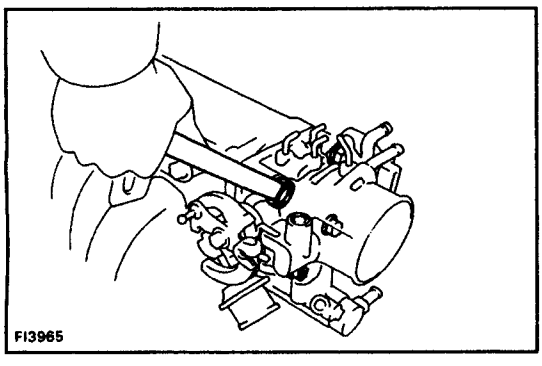

6. REMOVE THROTTLE BODY

Remove the 3 bolts and but, and remove the throttle body and gasket.

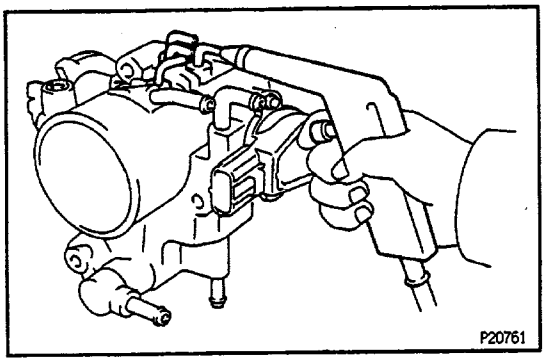

THROTTLE BODY INSPECTION

1. CLEAN THROTTLE BODY BEFORE INSPECTION

(a) Wash and clean the cast parts with a soft brush in carburetor cleaner.

(b) Using compressed air, clean all the passages and apertures in the throttle body.

NOTICE: To prevent deterioration, do not clean the throttle position sensor.

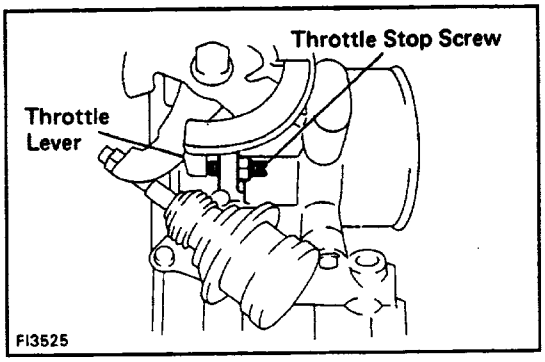

2. CHECK THROTTLE VALVE

Check that there is no clearance between the throttle stop screw and throttle lever when the throttle valve is fully closed.

3. CHECK THROTTLE POSITION SENSOR

(See step 2 on page EG1–182**)**

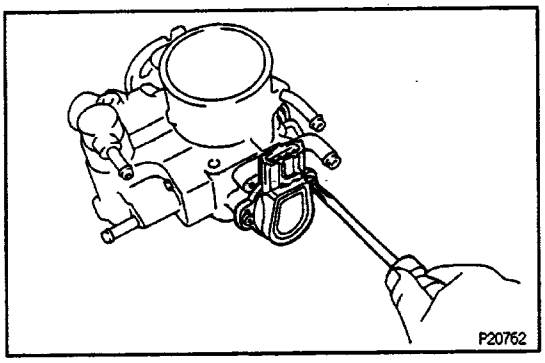

4. IF NECESSARY, ADJUST THROTTLE POSITION SENSOR

(a) Loosen the 2 screws of the sensor.

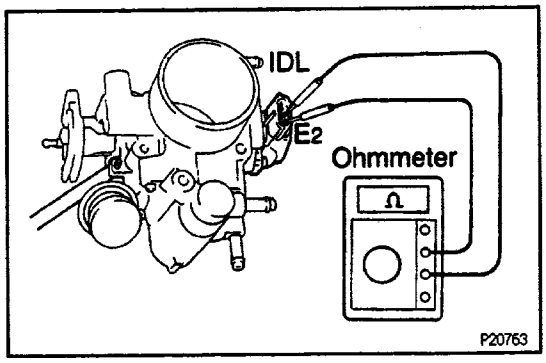

(b) Insert a thickness gauge (0.70 mm or 0.0276 in.) between the throttle stop screw and lever, and connect the ohmmeter to terminals IDL and Ez.

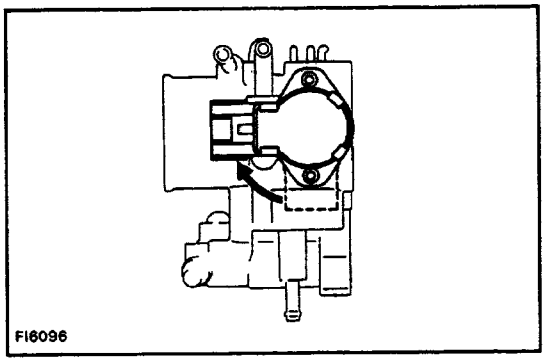

(c) Gradually turn the sensor clockwise until the ohmmeter deflects, and secure the sensor with the 2 screws

(d) Using a thickness gauge, recheck the continuity be. tween terminals IDL and Et.

Clearance between lever and stop screw	Continuity (IDLE – E2)
0.57 mm (0.0224 in.)	Continuity
0.85 mm (0.0335 in.)	No continuity

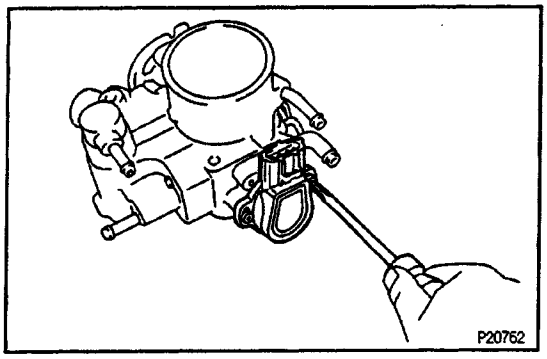

THROTTLE BODY DISASSEMBLY

1. REMOVE THROTTLE POSITION SENSOR

Remove the 2 screws and sensor.

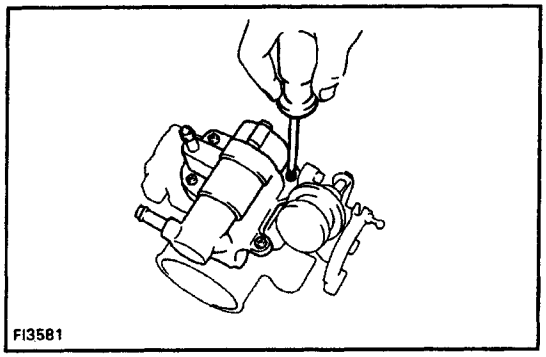

2. REMOVE AUXILIARY AIR VALVE

Remove the 4 screws, air valve and O–ring.

3. M/T:

REMOVE DASH POT

4. A/T:

REMOVE THROTTLE OPENER

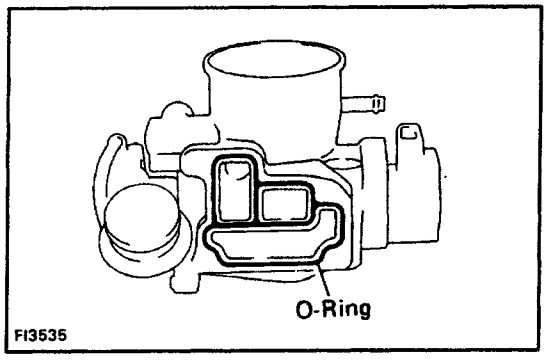

THROTTLE BODY ASSEMBLY

1. M/T:

INSTALL DASH POT

2. A/T:

INSTALL THROTTLE OPENER

3. INSTALL AIR VALVE

(a) Place a new O–ring on the throttle body.

(b) install the air valve with the 4 screws.

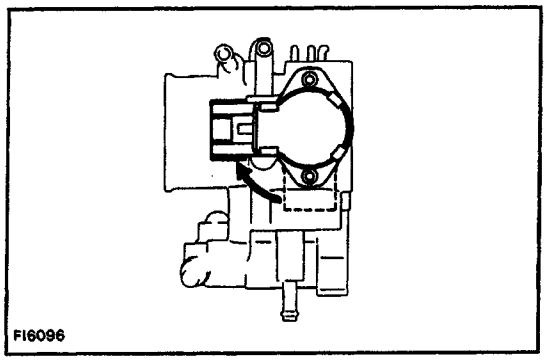

4. INSTALL THROTTLE POSITION SENSOR

(a) Check that the throttle valve is fully closed.

(b) Place the sensor on the throttle body as shown in the illustration.

(c) Turn the sensor clockwise, and temporarily install the 2 screws.

5. ADJUST THROTTLE POSITION SENSOR

(See step 4 throttle body inspection)

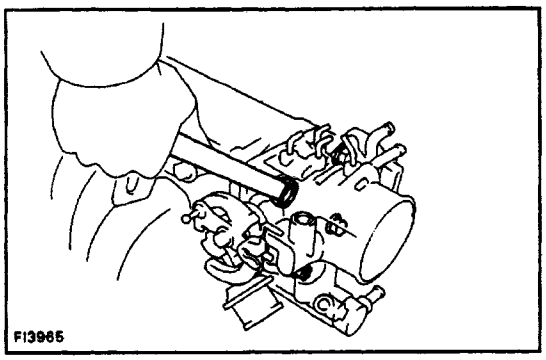

THROTTLE BODY INSTALLATION

1. INSTALL THROTTLE BODY

Using a new gasket, install the throttle body, 3 bolts and nut.

Torque: 19 N–m (195 kgf–cm, 14 ft–lbf)

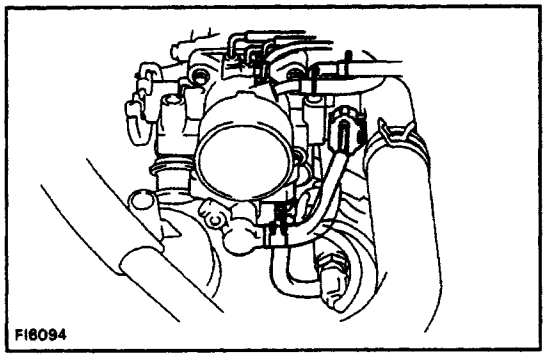

2. CONNECT THROTTLE SENSOR CONNECTOR

3. CONNECT THESE HOSES:

(a) Emission control hoses

(b) No. 2 and No. 3 water bypass hoses

(c) PCV hose

(d) w/ A/C:

A/C idle up hose

4. CONNECT ACCELERATOR CABLE

5. INSTALL AIR INTAKE CONNECTOR

6. FILL WITH COOLANT

TROUBLESHOOTING w VOLT OHMMETER

HINT: Because the following troubleshooting procedures are designed for inspection of each separate system, the actual troubleshooting procedure may vary somewhat.
However, please refer to these procedures and troubleshoot, conforming to the inspection methods described.
For example, it is better to first make a simple check of the fuses, fusible links and connecting condition of the connectors before making your inspection according to the procedures listed.
The following troubleshooting procedures are based on the supposition that the trouble lies in either a short or open circuit in a component outside the computer or a short circuit within the computer. If engine trouble occurs even though proper operating voltage is detected in the computer connector, then the ECM is faulty and should be replaced.

FUSES, H– FUSES AND FUSIBLE LINK LOCATION

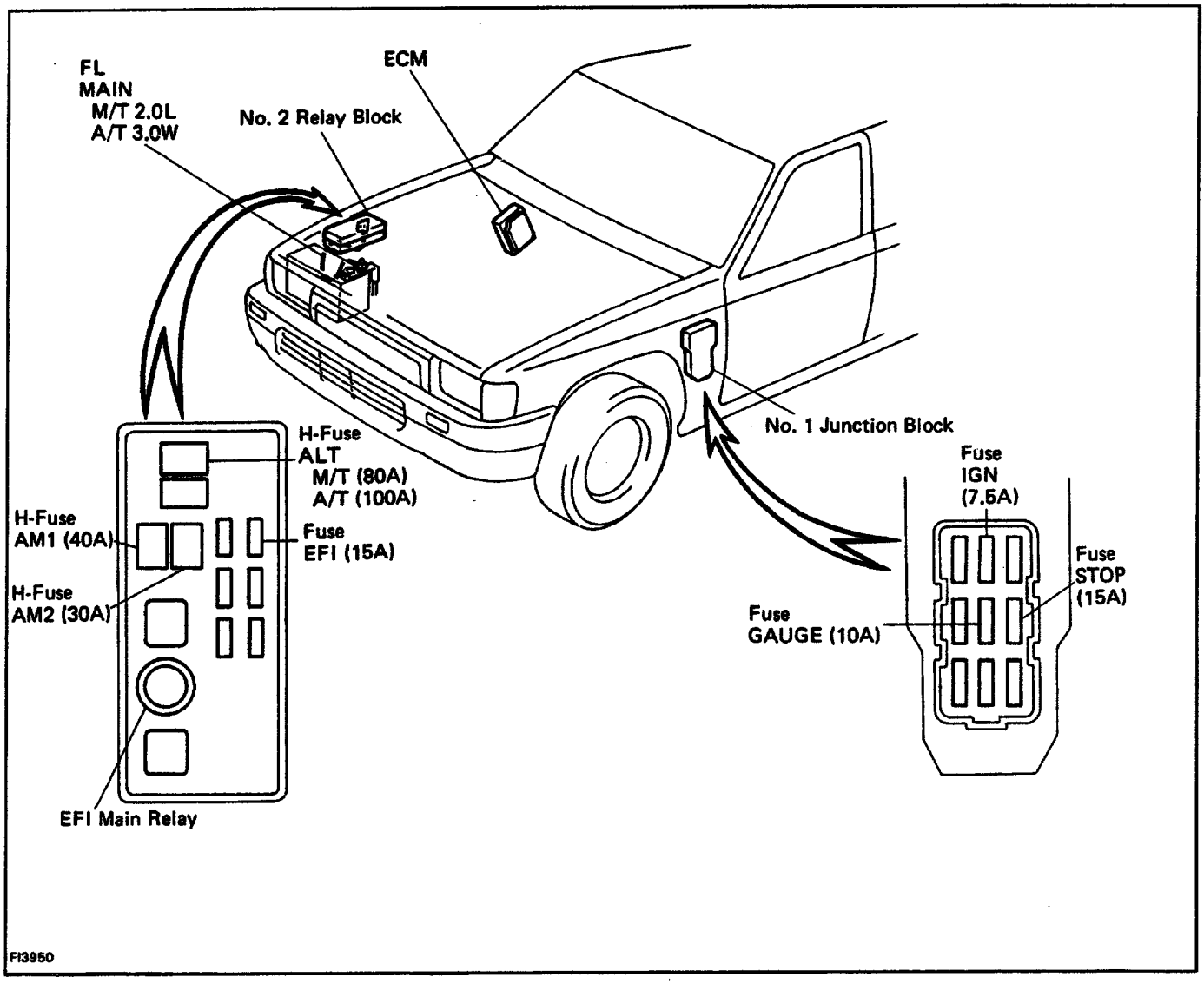

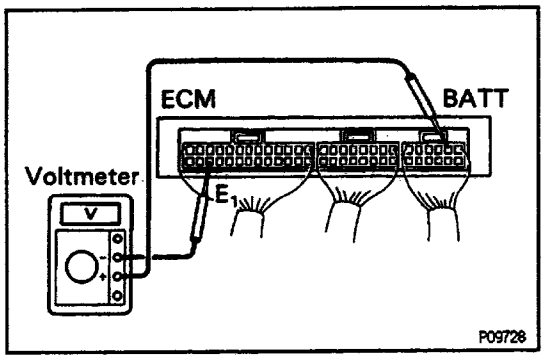

MFI SYSTEM CHECK PROCEDURE (Except 4WD A/T)

HINT:
Do all voltage measurements with the connectors connected.
Verify that the battery voltage is 11 V or more when the ignition switch is in "ON" position.
Using a voltmeter with high impedance (10 kΩ/V minimum), measure the voltage at each terminal of the wiring connector.

ECM Terminals (Except 4WD A/T)

Symbol	Terminals Name	Symbol	Terminal Name
W_{01}	ENGINE GROUND	Ox_1	OXYGEN SENSOR (MAIN)
E_{02}	ENGINE GROUND	KNK	KNOCK SENSOR
No.10	INJECTOR	*1 Ox_2	OXYGEN SENSOR (SUB)
No.20	INJECTOR	THG	EGR GAS TEMPERATURE SENSOR
STJ	COLD START INJECTOR	THW	ENGINE COOLANT TEMPERATURE SENSOR
E_1	ENGINE GROUND	IDL	THROTTLE POSITION SENSOR
Fpu	FUEL PRESSURE CONTROL VSV	Vc	VOLUME AIR FLOW METER
*1 EGR	EGR VSV	Vcc	THROTTLE POSITION SENSOR
AS	AIR VSV	Vs	VOLUME AIR FLOW METER
IGt	IGNITER	VTA	THROTTLE POSITION SENSOR
Ne	DISTRIBUTOR	THA	INTAKE AIR TEMPERATURE SENSOR
IGf	iGNITER	E_2	SENSOR GROUND
STA	STARTER SWITCH	*3 4WD	4WD SWITCH
*2 NSW	PNP SWITCH	STP	STOP LIGHT SWITCH
HT_1	OXYGEN SENSOR HEATER (MAIN)	SPD	SPEED SENSOR
*1 HT_2	OXYGEN SENSOR HEATER (SUB)	BATT	BATTERY POSITIVE VOLTAGE
VF	DLC1	W	MALFUNCTION INDICTOR LAMP
E_{21}	SENSOR GROUND	$+B_1$	MAIN RELAY
TE_2	DLC1	+B	MAIN RELAY
TE_1	DLC 1		

*1: California only *2: A/T only *3: 4WD only

ECM Terminals

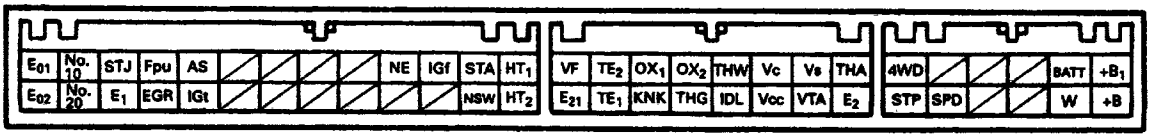

P09752

Voltage at ECM Wiring Connectors (Except 4WD A/T)

No.	Terminals	Condition		STD voltage	See page
1	BATT – E_1	–		9 – 14	EG1–128
	+B – E_1	Ignition switch ON			
	$+B_1$ – E_1				
2	IDL – E_2 (E_{21})	Ignition switch ON	Throttle valve open	9 – 14	EG1–130
	Vcc – E_2 (E_{21})		–	4.5 – 5.5	
	VTA – E_2 (E_{21})		Throttle valve fully closed	0.3 – 0.8	
			Throttle valve fully open	3.2 – 4.9	
3	Vc – E_2 (E_{21})	Ignition switch ON	–	6–10	EG1–132
	Vs – E_2 (E_{21})		Measuring plate fully closed	0.5–2.5	
			Measuring plate fully open	5–10	
		Idling		2–8	
	THA – E_2 (E_{21})	Ignition switch ON	Intake air temperature 20°C (68°F)	0.5 – 3.4	
4	THW – E_2 (E_{21})	Ignition switch ON	Coolant temperature 80°C (176°F)	0.2 – 1.0	EG1–134
5	STA – E_1	Ignition switch START position		6–12	EG1–135
6	No. 10 – E_{01} No. 20 – E_{02}	Ignition switch ON		9 – 14	EG1–136
7	IGt – E_1	Idling		0.7–1.0	EG1–137
8	W – E_1	No trouble (MIL off) and engine running		9 – 14	EG1–138
9	STJ – E_1	Ignition switch START position	Coolant temperature 80°C (176°F)	6–12	EG1–139
10	STP – E_1	Stop light switch ON		7.5 – 14	EG1–140

No.	Terminals	Trouble	Condition	STD Voltage
1	BATT – E_1	No voltage	–	9 – 14 V
	+B – E_1		Ignition switch ON	
	$+B_1$ – E_1			

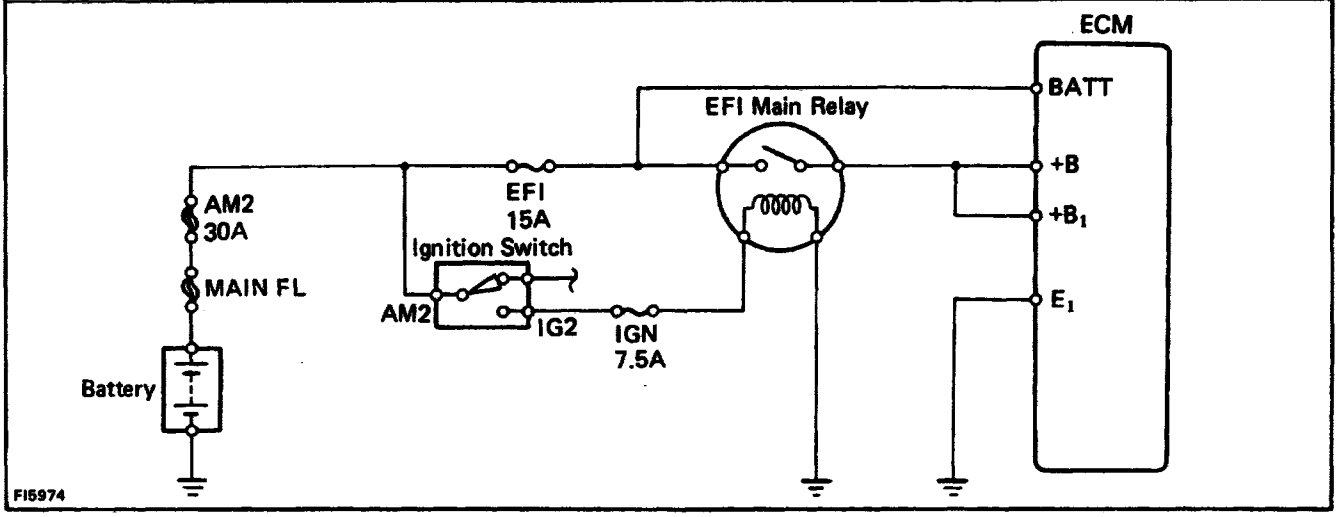

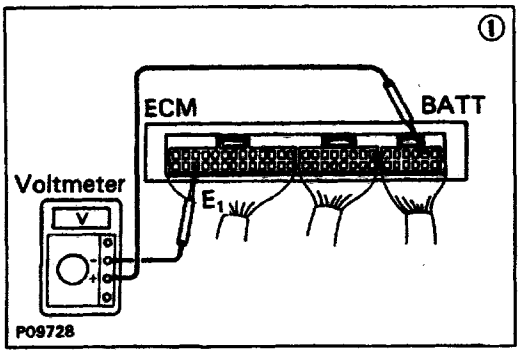

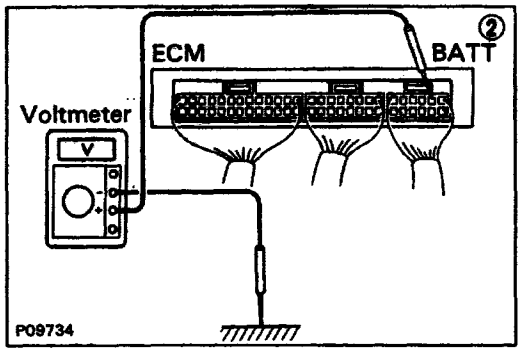

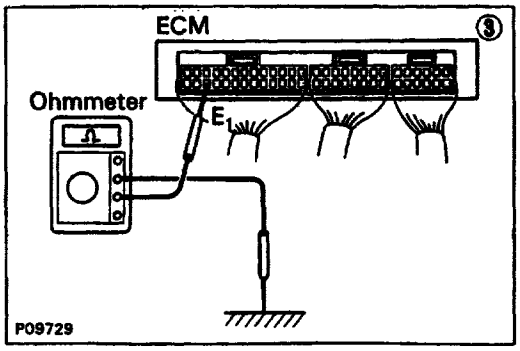

• BATT–E1

(1) There is no voltage between ECM terminals BATT and Ei.

↓

Check that there is voltage between ECM terminal BATT and body ground.

NO → OK

Check wiring between ECM terminal E, and body ground.

OK → Try another ECM.

BAD → Repair or replace.

Check fuse and fusible link.

BAD → Replace.

OK

Check wiring between fuse and ECM.

BAD → Repair or replace.

V01815

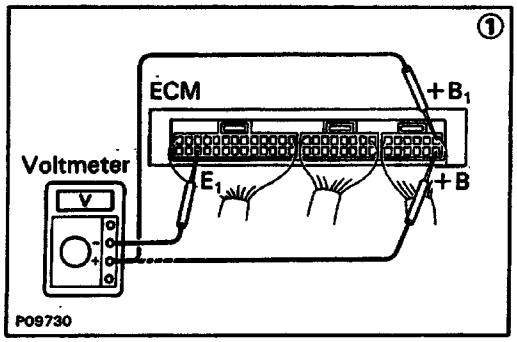

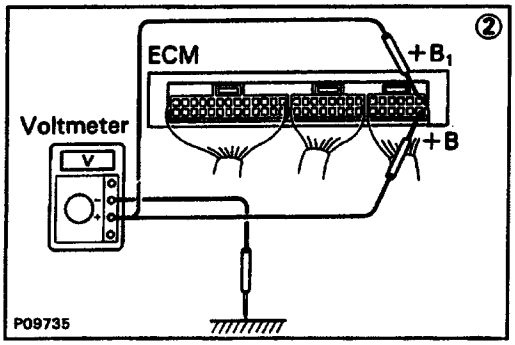

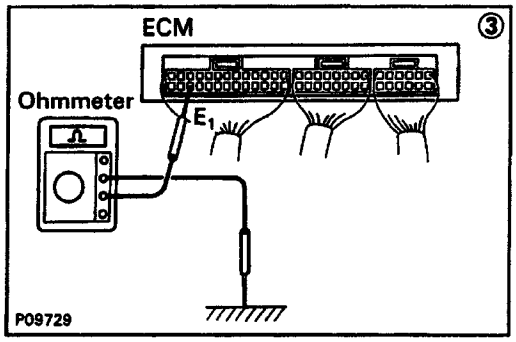

- **+B (+B1) – E1**

(1) There is no voltage between ECM terminals + B (+ B1) and E1. **(IG SW ON)**

(2) Check that there is voltage between ECM terminal + B (+ B1) and body ground. **(IG SW ON)**

NO → **OK**

(3) Check wiring between ECM terminal E, and body ground.

OK → Try another ECM.

BAD → Repair or replace.

Check fuse, fusible link and ignition switch. BAD → Repair or replace.

OK

Check E F f main relay. BAD → Replace.

OK

Check wiring between EFI main relay and battery. BAD → Repair or replace.

OK

Check wiring between EFI main relay and ECM terminal +B (+B1). BAD → Repair or replace.

V01814

No.	Terminals	Trouble	Condition		STD Voltage
2	IDL – E_2 (E_{21})	No voltage	Ignition switch ON	Throttle valve open	9 – 14 V
	Vcc – E_2 (E_{21})			–	4.5 – 5.5 V
	VTA – E_2 (E_{21})			Throttle valve fully dosed	0.3 – 0.8 V
				Throttle valve fully open	3.2 – 4.9 V

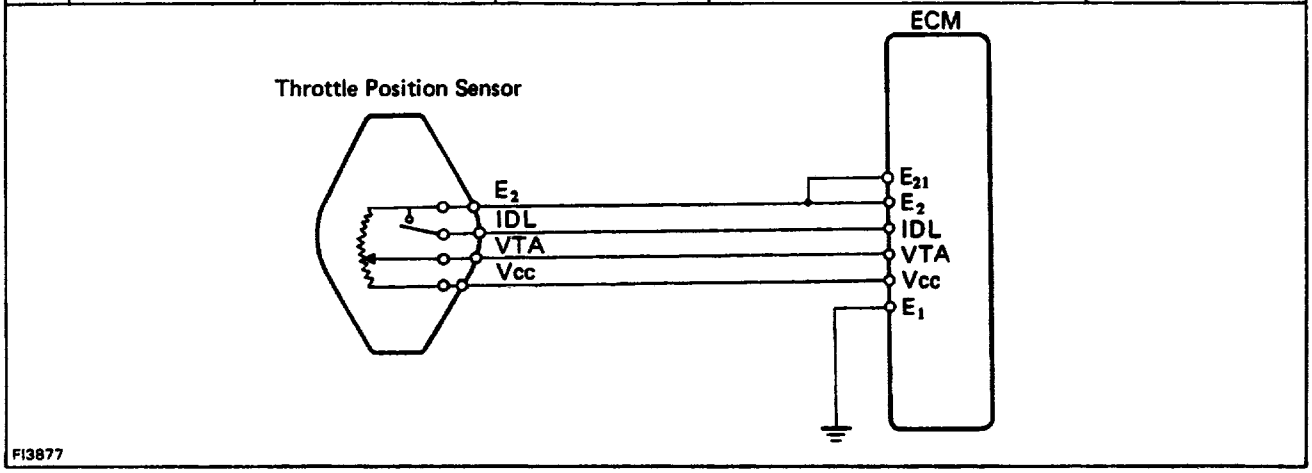

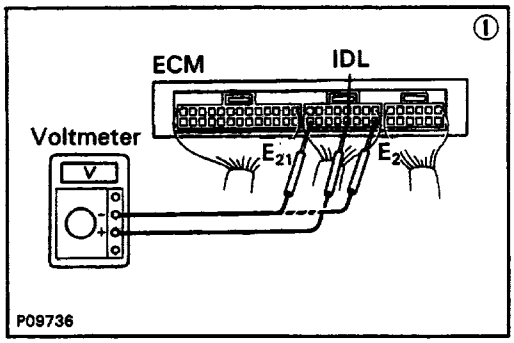

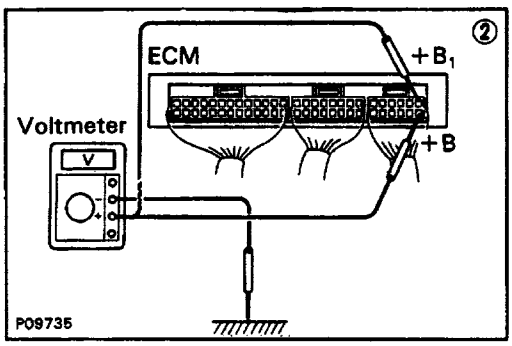

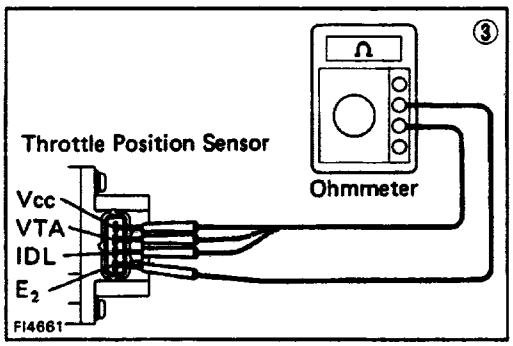

o IDL – EZ (E21)

(1) There is no voltage between ECM terminals IDL and E2 (E2,). UG SW ON)(Throttle valve open)

(2) Check that there is voltage between ECM terminal + B (+ B1) and body ground. UG SW ON)

NO → Refer to No. 1. → BAD → Replace or repair.

Refer to No. 1. → OK → (3) Check throttle position sensor.

(3) Check throttle position sensor.

BAD → Replace or repair throttle position sensor.

OK → Check wiring between ECM and throttle position sensor.

Check wiring between ECM and throttle position sensor. → OK → Try another ECM.

OK → Check wiring between ECM terminal E, and body ground.

Check wiring between ECM terminal E, and body ground.

OK → (3) Check throttle position sensor.

BAD → Replace or repair.

Replace or repair. → BAD → Check wiring between ECM and throttle position sensor.

OK → (3) Check throttle position sensor.

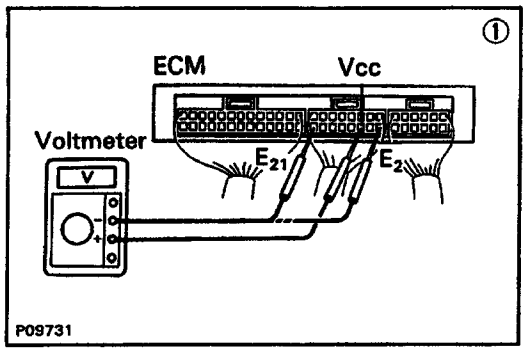

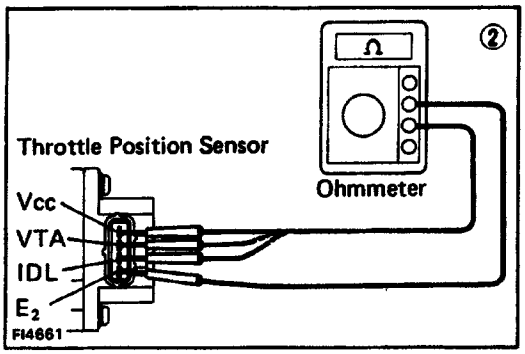

- **Vcc – E2 (E21)**

(1) There is no voltage between ECM terminals Vcc and E2 (E21) To **(IG SW ON)**

Check that there is voltage between ECM terminals + B (+ BI) and El. UC3 SW ON)

OK → (2) Check throttle position sensor.

NO → Refer to No. t .

(2) Check throttle position sensor.

BAD → Repair or replace.

OK → Check wiring between ECM and throttle position sensor.

Check wiring between ECM and throttle position sensor.

OK → Try another ECM.

BAD → Repair or replace wiring.

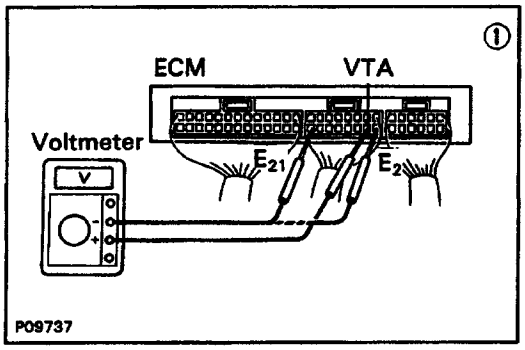

- **VTA – E2 (E21)**

(1) There is no specified voltage between ECM terminals VTA and E2 (E21). **(IG SW ON)**

(2) Check that there is voltage between ECM terminals Vcc and E2 (E21) **(IG SW ON)**

OK

NO → Perform inspection of Vcc – E2 (E21).

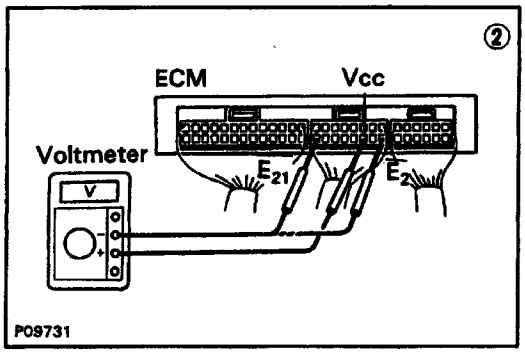

(3) Check throttle position sensor.

BAD → Repair or replace.

OK

Check wiring between ECM and throttle position sensor.

BAD → Repair or replace.

OK

Try another ECM.

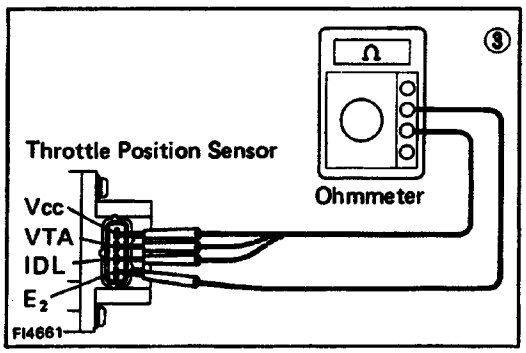

V01817

Vc –Et (E21)

No.	Terminals	Trouble	Condition		STD Voltage
3	Vc – E_2 (E_{21})	No voltage	Ignition switch ON	–	6 – 10 V
	Vs – E_2 (E_{21})			Measuring plate folly cloud	0.5 – 2.5 V
				Measuring plate fully open	5 – 10 V
			Idling		2 – 8 V
	THA – E_2 (E_{21})		ignition switch 4N	Intake air temperature 200° C (68° F)	0.5 – 3.4 V

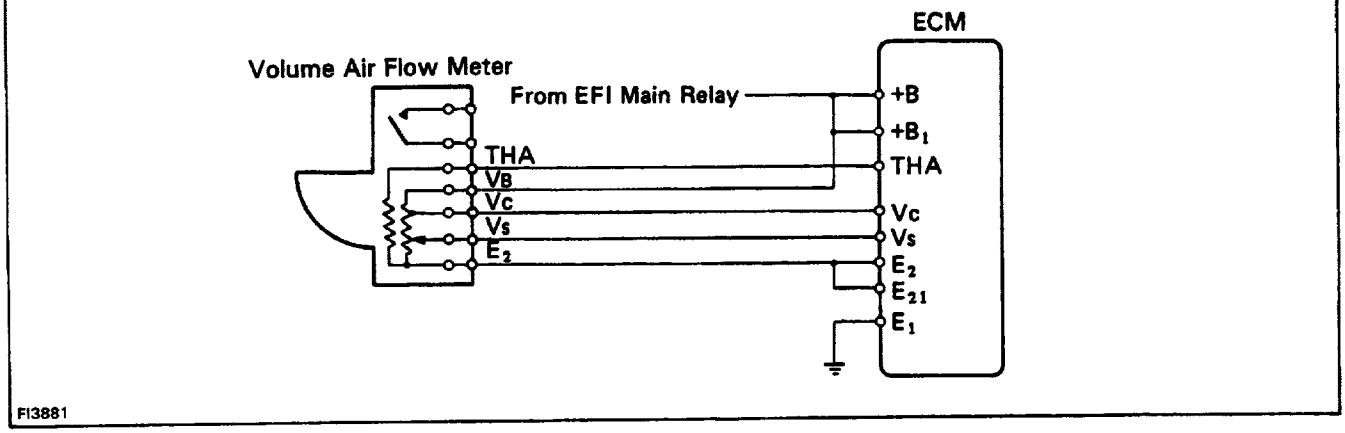

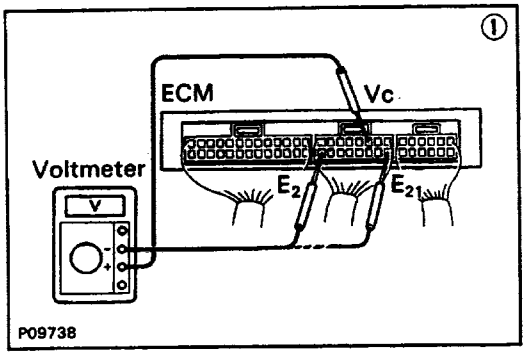

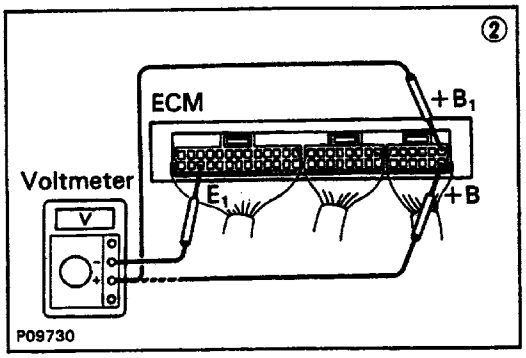

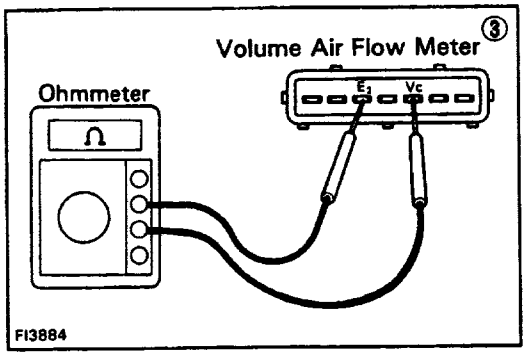

- **Vc–E2 (E21)**

(1) There is no voltage between ECM terminals Vc and EZ (E20) **(IG SW ON)**

(2) Check that there is voltage between ECM terminals + B 1 (+ B1) and E1**. (IG SW ON)**

OK → (3) Check volume air flow meter.

NO → Refer to No. 1.

BAD → Replace or repair volume air flow meter.

OK → Check wiring between ECM and volume air flow meter.

OK → Try another ECM.

BAD → Replace or repair wiring.

V01818

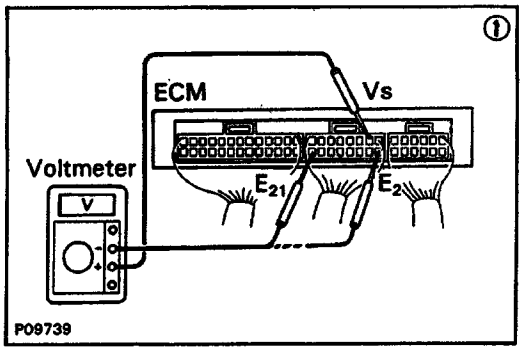

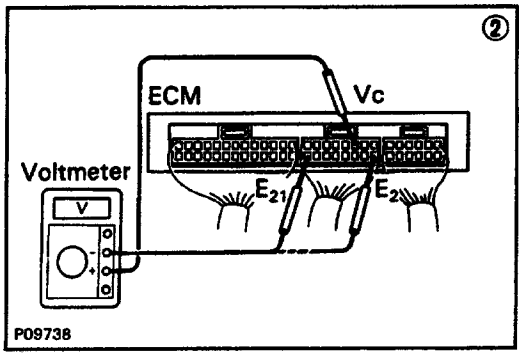

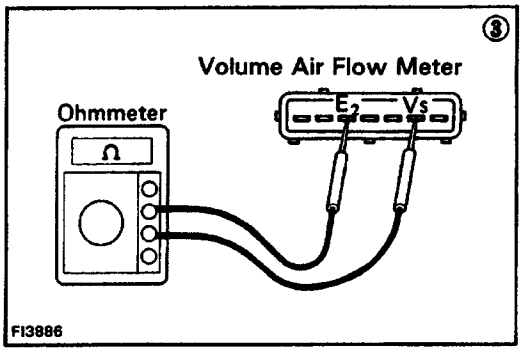

- **Vs – E? (E21)**

(1) There is no voltage between ECM terminals Vs and E2 (E21) **(IG SW ON)**

↓

(2) Check that there is voltage between ECM terminals Vc and E2 (E21). **(IG SW ON)**

↓ OK — NO → Refer to Vc – Et (E21) → BAD → Repair or replace.

↓ OK

(3) Check volume air flow meter. → BAD → Repair or replace.

↓ OK

Check wiring between ECM and volume air flow meter. → BAD → Repair. or replace.

↓ OK

Try another ECM.

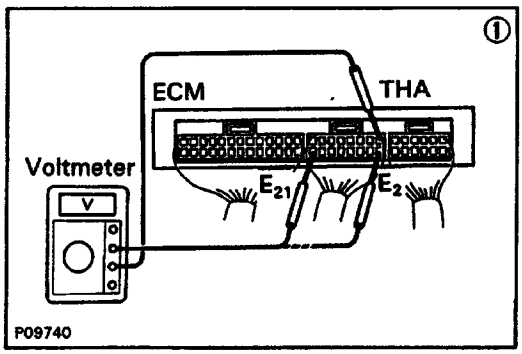

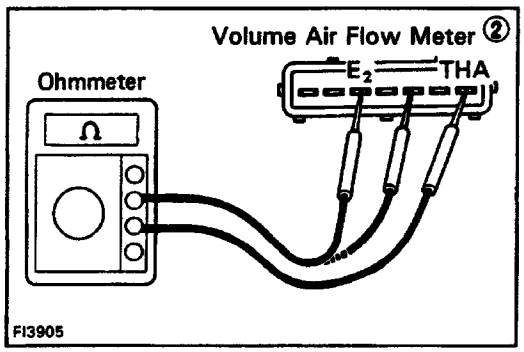

- **THA – E2 (E21)**

(1) There is no voltage between ECM terminals THA and E2 (E21) **(IG SW ON)**

↓

Check that there is voltage between ECM terminal +B (+ B1) and body ground. (IG SW ON)

↓ OK — NO → Refer to No. 1 .

↓ OK

(2) Check intake air temp. sensor.

↓ BAD → Replace volume air flow meter.

↓ OK

Check wiring between ECM and intake air temp. sensor.

↓ OK — BAD → Repair or replace wiring.

↓ OK

Try another ECM.

V01819

No.	Terminals	Trouble	Condition		STD –Voltage
4	THW – E_2 (E_{21})	No voltage	Ignition switch ON	Coolant temperature 80˚C (176˚ F)	0.2 – 1.0 V

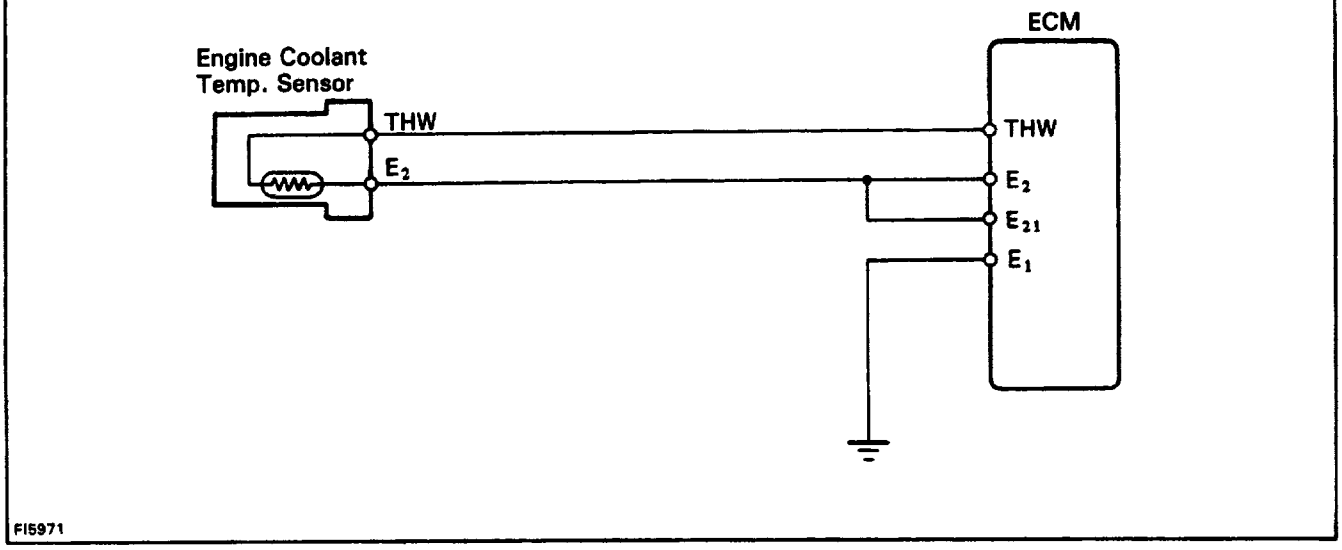

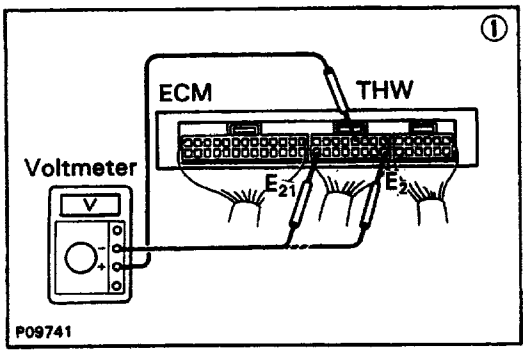

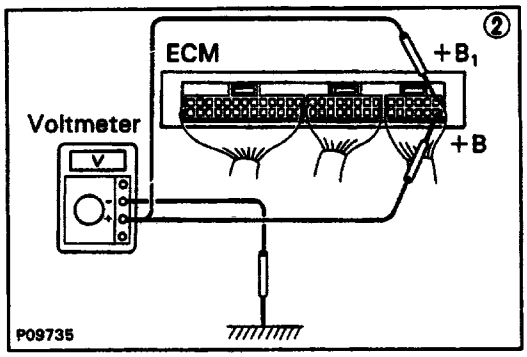

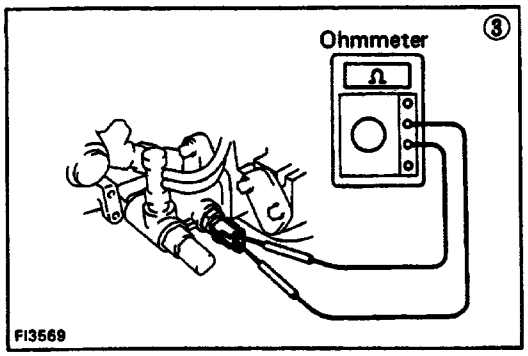

(1) There is no voltage between ECM terminals THW and E2 (E20. **(IG SW ON)**

(2) Check that there is voltage between ECM terminal +B (+B) and body ground**. (IG SW ON)**

OK

NO

Refer to No. 1 .

Check wiring between ECM terminal E, and body ground.

OK

BAD

(3) Check engine coolant temp. sensor.

Repair or replace.

BAD

OK

Replace engine coolant temp. sensor.

Check wiring between ECM and engine coolant temp. sensor.

OK

BAD

Try another ECM.

Repair or replace.

No.	Terminal:	Trouble	Condition	STD Voltage
5	STA – E_1	No voltage	Ignition switch START position	6 – 12 V

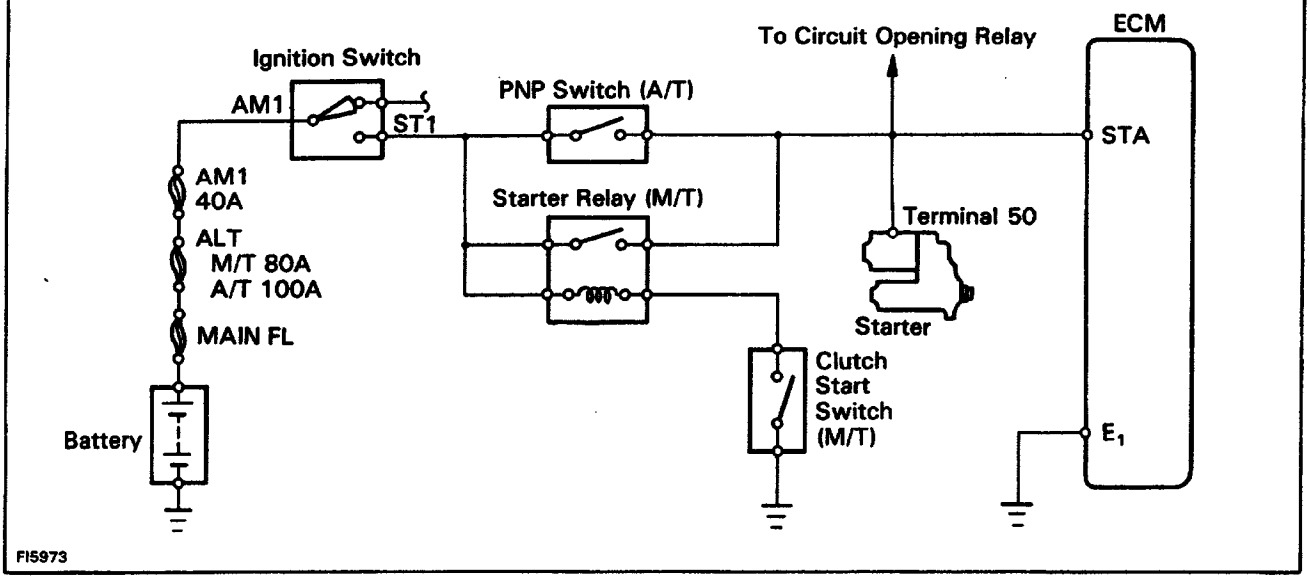

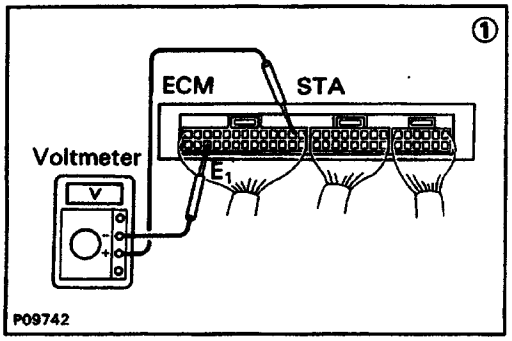

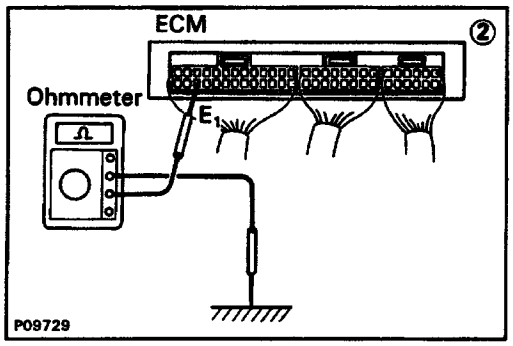

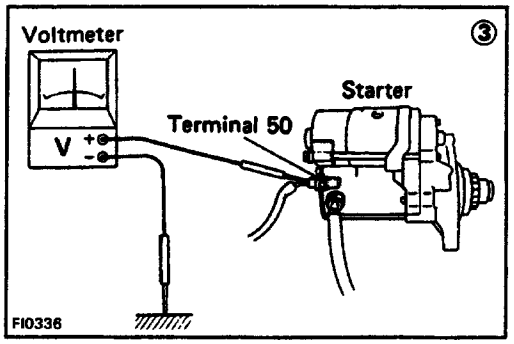

(1) There is no voltage between ECM terminals STA and EI. **(IG SW START)**

Check starter operation. — OK → Check wiring between ECM and ignition switch terminal ST.

Check starter operation. — BAD → (2) Check wiring between ECM terminal E1, and body ground.

Check wiring between ECM and ignition switch terminal ST. — BAD → Repair or replace.

Check wiring between ECM and ignition switch terminal ST. — OK → (2) Check wiring between ECM terminal E1, and body ground.

(2) Check wiring between ECM terminal E1, and body ground. — OK → Try another ECM.

(2) Check wiring between ECM terminal E1, and body ground. — BAD → Repair or replace.

Check fusible link, battery, wiring and ignition switch. — BAD → Repair or replace.

Check fusible link, battery, wiring and ignition switch. — OK → (3) Check that there is voltage at terminal 50 of starter. UG SW START) STD voltage: 6 –12 V

(3) Check that there is voltage at terminal 50 of starter. UG SW START) STD voltage: 6 –12 V — OK → Check starter. (See page ST–4)

(3) Check that there is voltage at terminal 50 of starter. UG SW START) STD voltage: 6 –12 V — NO → Check wiring between ignition switch ST1 terminal and starter terminal 50.

V02133

No.	Terminals	. Trouble	Condition	STD Voltage
6	No. 10 – E_{01} No. 20 E_{02}	No voltage	Ignition switch ON	9 – 14 V

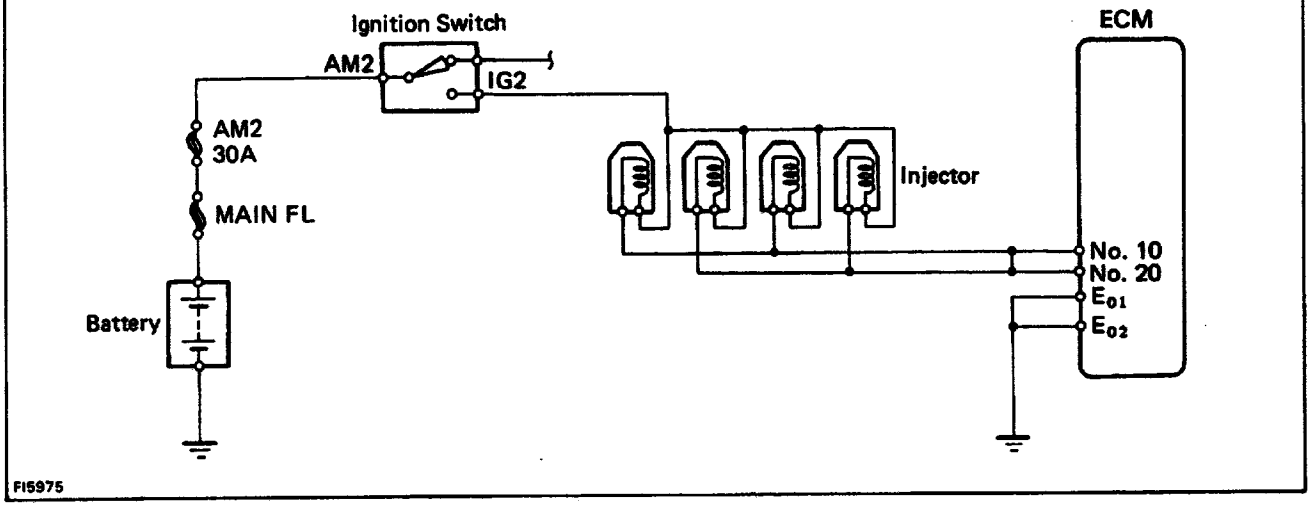

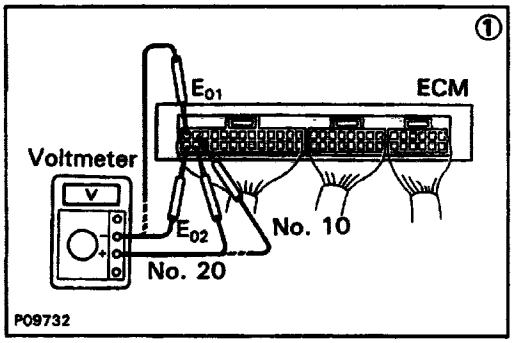

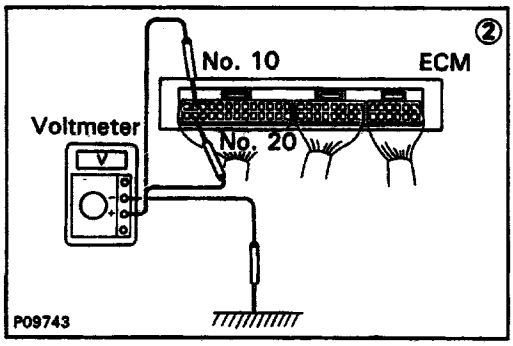

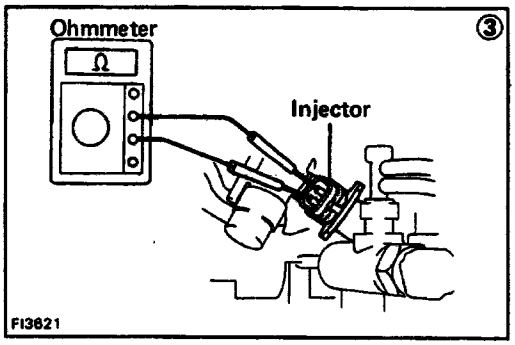

(1) There is no voltage between ECM terminals No. 10 and/or No. 20 and E01 and/or E02. **(IG SW ON)**

↓

(2) Check that there is voltage between ECM terminal No. 10 and/or No. 20 and body ground.

NO → ↓

OK → Check wiring between ECM terminal E0, and/or E02 and body ground.

OK → Try another ECM.

BAD → Repair or replace.

↓

Check fusible link and ignition switch. → BAD → Repair or replace.

↓ OK

(3) Check resistance of magnetic coil in each injector.
STD resistance: 13.4 –14.2 12

OK → ↓

NO → Replace injector.

↓

Check wiring between ECM terminal No. 10 and/or No. 20 and battery. → BAD → Repair or replace.

V01822

No.	Terminals	Trouble	Condition	STO Voltage
7	IGt – E_1	No voltage	Idling	0.7 – 1.0 V

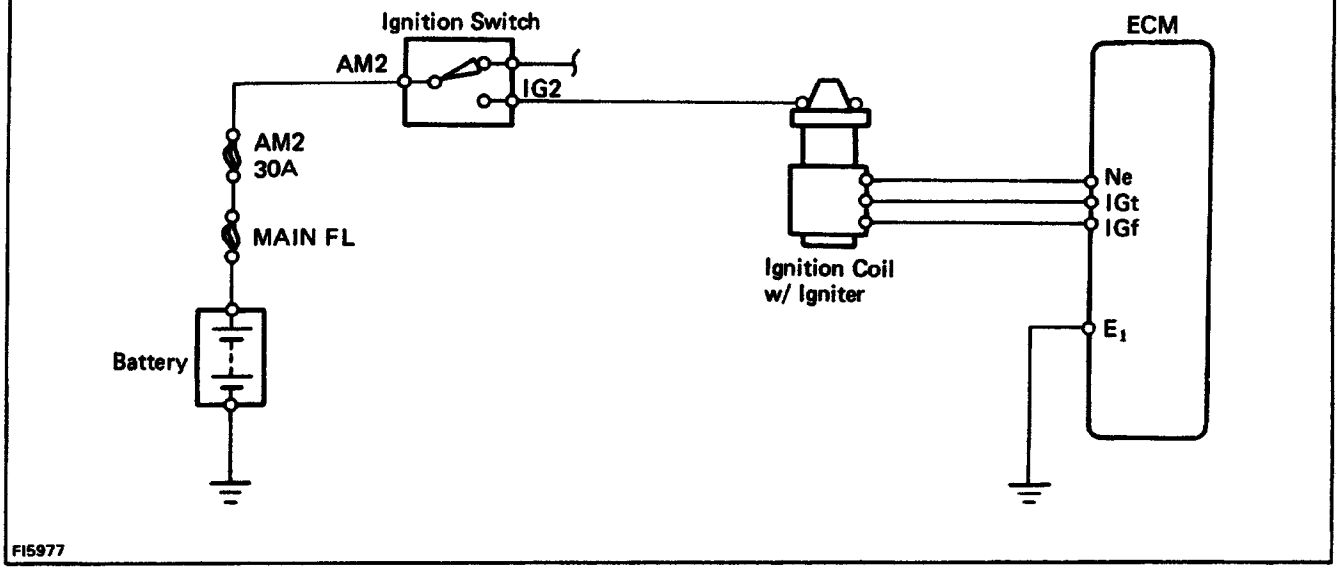

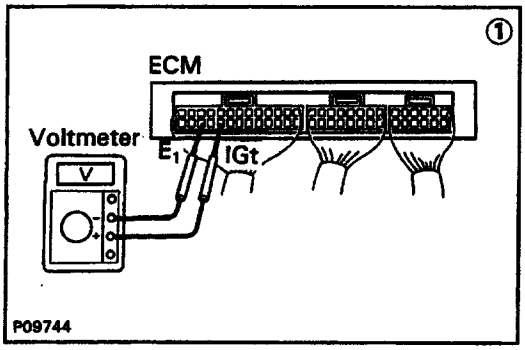

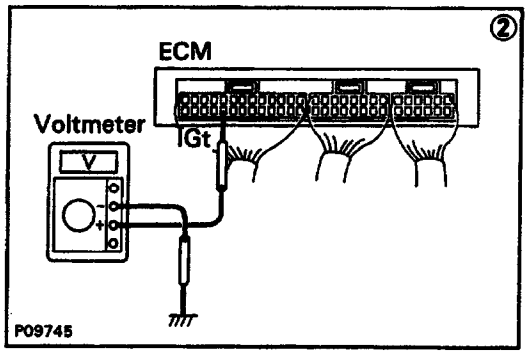

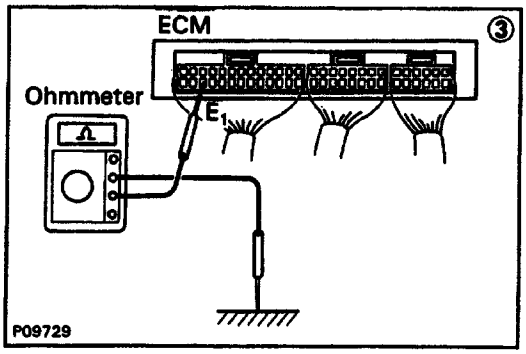

(1) There is no voltage between ECM terminals IGt and E1 (Idling)

↓

(2) Check that there is voltage between ECM terminal IGt and body ground. (idling) .

NO → Refer to No. 1.

OK → (3) Check wiring between ECM terminal E1, and body ground.

BAD → Repair or replace.

Refer to No. 1. → OK

BAD → Repair or replace.

Check wiring between igniter and distributor. → OK

BAD → Replace.

Check distributor. → OK

BAD → Repair or replace.

Check wiring between ECM and igniter. → OK

BAD → Repair or replace.

Check ignite.. → OK

Try another ECM.

V01823

No.	Terminals	Trouble	Condition	STD Voltsp
8	W – E_1	No voltage	No trouble (MIL off) and engine running	9 – 14 V

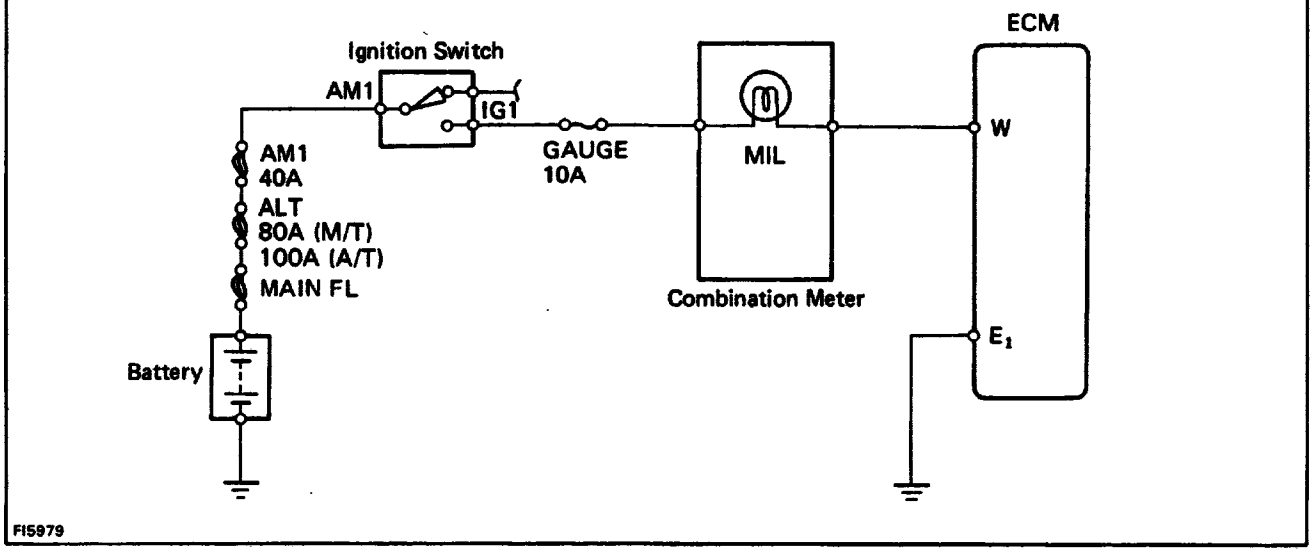

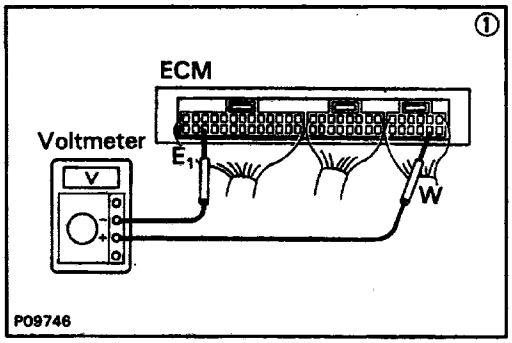

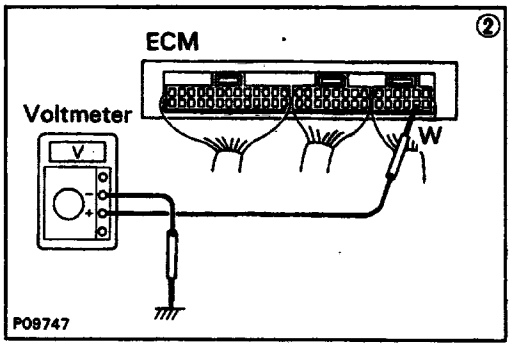

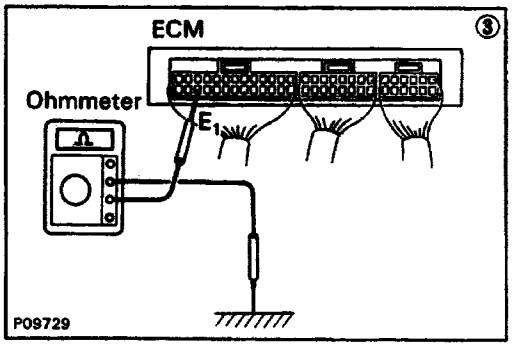

(1) There is no voltage between ECM terminals W and El.
(Idling)

(2) Check that there is voltage between ECM terminal W and body ground.

NO

OK

(3) Check wiring between ECM terminal E1, and body ground.

OK

BAD

Try another ECM.

Repair or replace.

Check GAUGE fuse (10 Ay and MIL.

OK

BAD

Repair or replace.

Fuse blows again
ECM BAD

Check wiring between ECM terminal W and fuse.

Repair or replace.

V02134

No.	Terminal	Trouble	Condition		STD Voltage
9	STJ – E_1	No voltage	Ignition switch ST position	Coolant temperature 80°C (176°F)	6 – 12 V

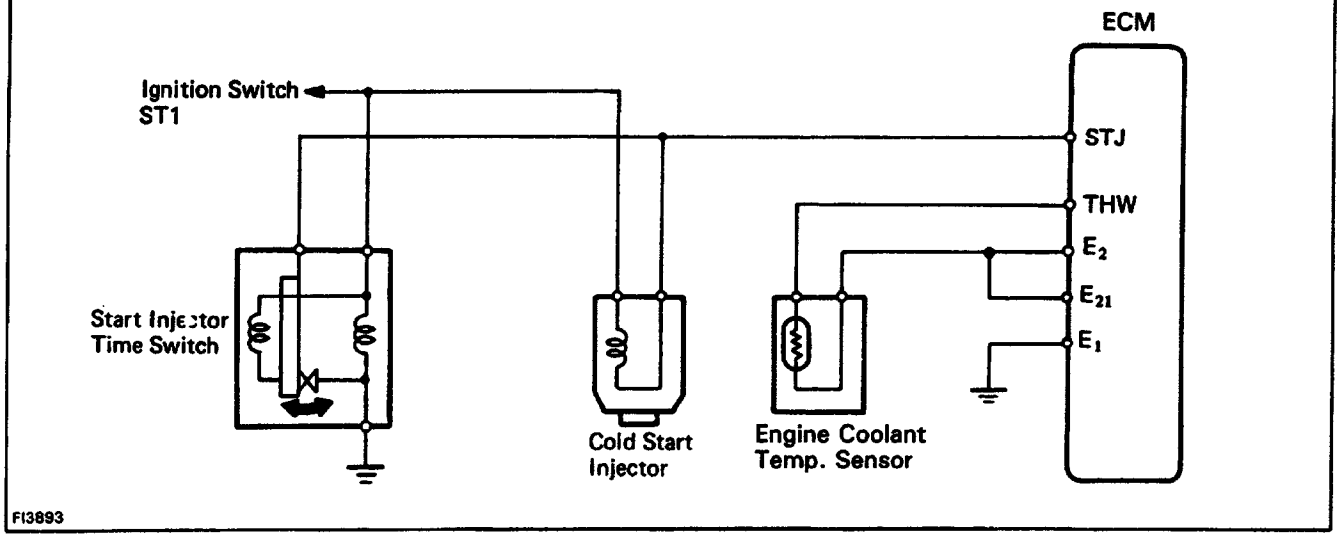

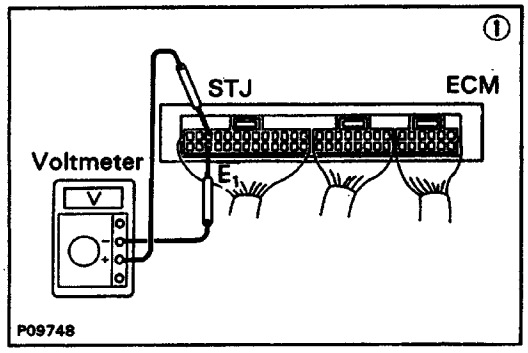

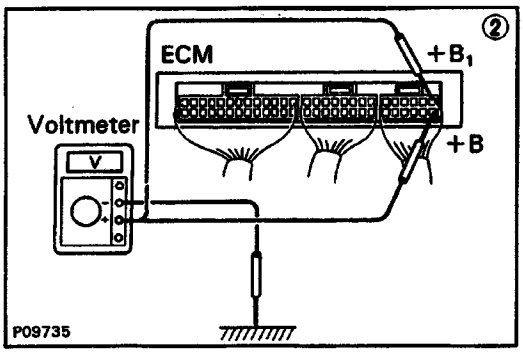

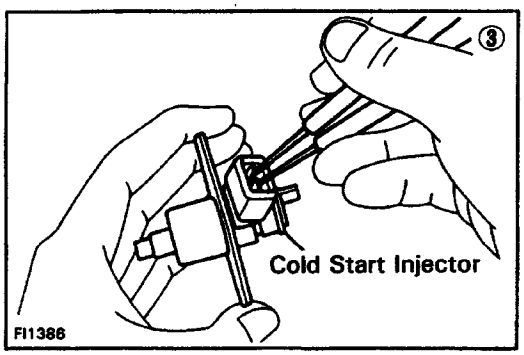

(1) There is no voltage between ECM terminals STJ and E1, (IG SW ON)

↓

(2) Check that there is voltage between ECM terminal + B (+B1) and body ground. **(IG SW ON)**

OK → (3) Check cold start injector.

- BAD → Replace cold start injector.
- OK → Check wiring between ECM and cold start injector.
  - OK → Check wiring between ECM terminal E, and body ground.
    - OK → Try another ECM.
    - BAD → Repair or replace wiring.

NO → Refer to No. 1.

V01825

No.	Terminals	Trouble	Condition	STD Voltage
10	STP – E_1	No voltage	Stop light switch ON	7.5 – 14 V

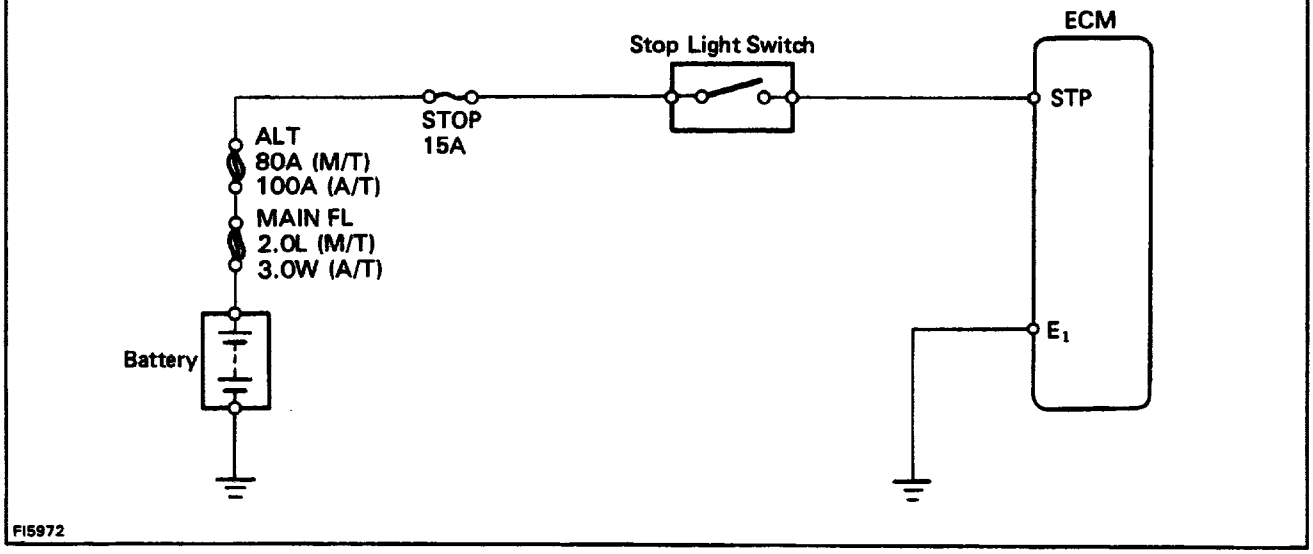

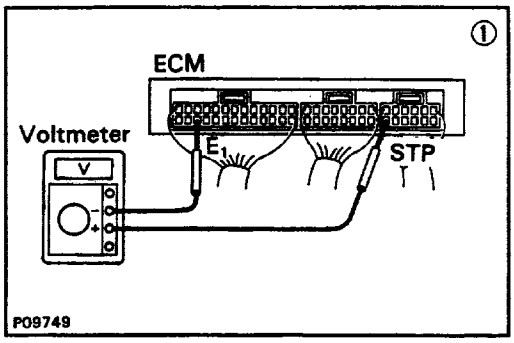

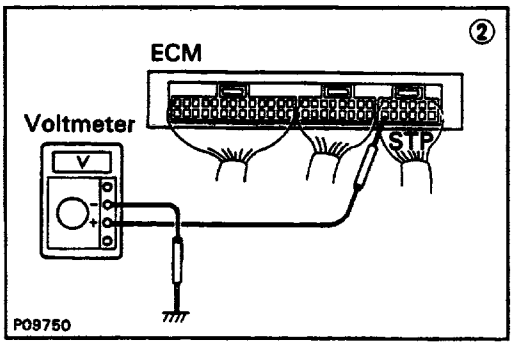

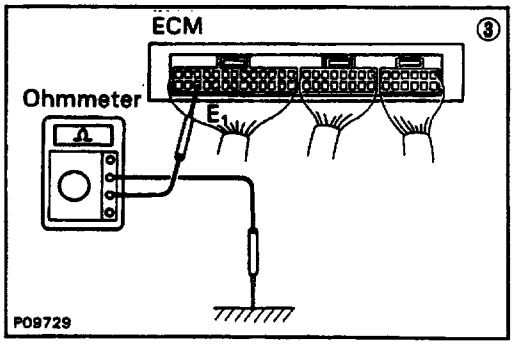

(1)There is no voltage between ECM terminals STP and E1.

↓

(2) Check that there is voltage between ECM terminal STP and body ground when the brake pedal is depressed.

NO → ↓

OK →

(3) Check wiring between ECM terminal E, and body ground.

OK → Try another ECM.

BAD → Repair or replace.

↓

Check STOP fuse (15A) and stop light switch.

BAD → Repair or replace.

OK ↓

Check wiring between ECM terminal STP and battery.

BAD → Repair or replace.

V02135

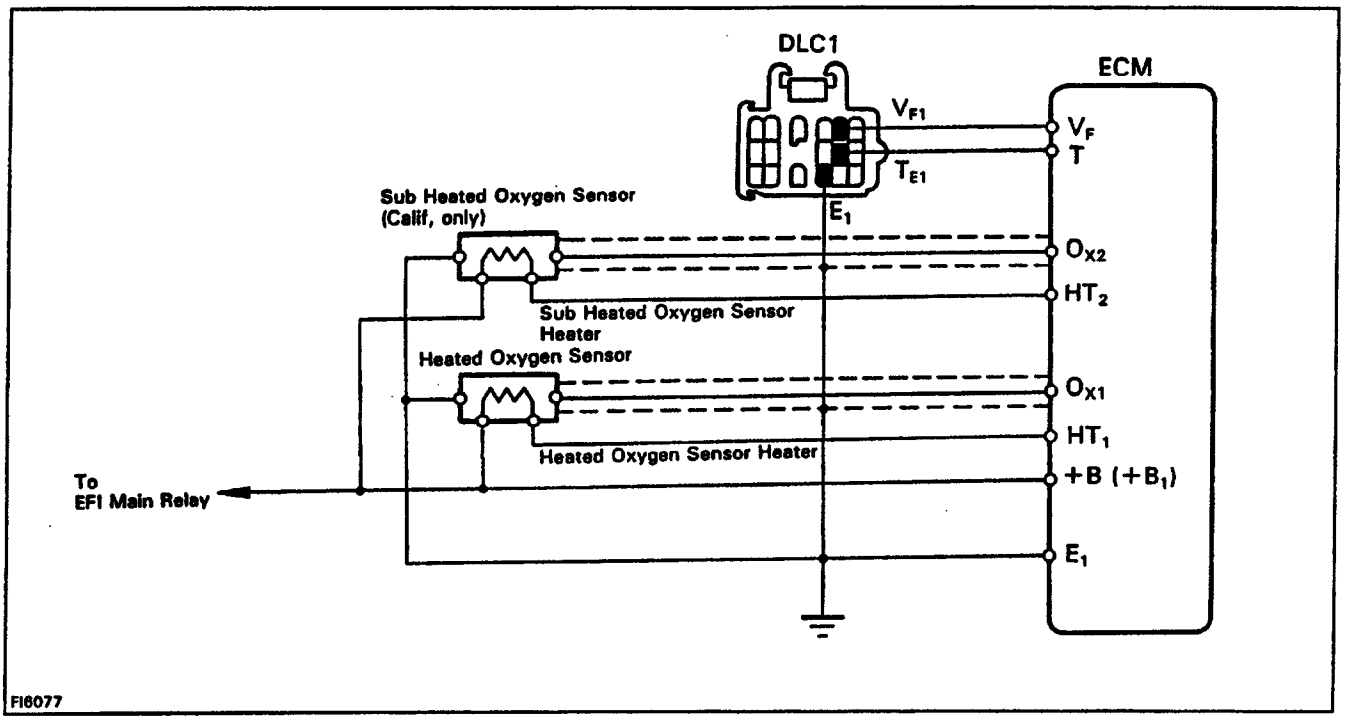

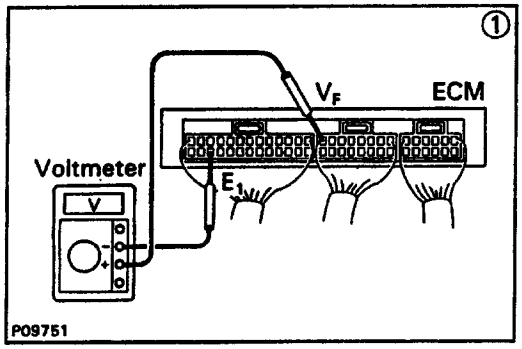

(I)There is no voltage between ECM terminals VF and E1

Check that there is voltage between ECM terminal VF and body ground.

NO

OK

Check wiring between ECM terminal E1, and body ground.

OK

BAD

Try another ECM.

Repair or replace.

Is air leaking into air induction system?

YES

Repair air leak.

NO

Check spark plugs.

BAD

Repair or replace.

OK

Check distributor and ignition system.

BAD

Repair or replace.

OK

CONTINUED 4N PAGE
EG1–142

V03950

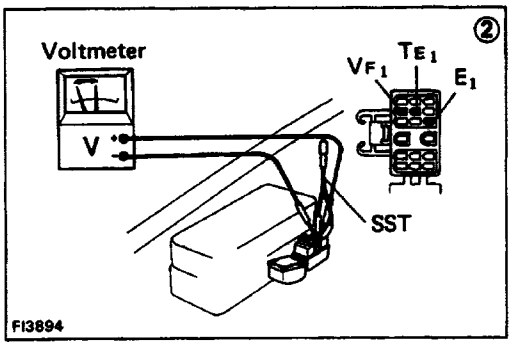

CONTINUED FROM PAGE EG1–141

OK

Check fuel pressure. — BAD → Repair or replace.

OK

Check injector. — BAD → Repair or replace.

OK

Check cold start injector.* — BAD → Repair or replace.

OK

Check volume air flow meter. — BAD → Repair or replace.

OK

(2) Check operation of oxygen sensor. — OK → System normal.

BAD

Check wiring between oxygen sensor and ECM connector. — BAD → Repair wiring.

OK

Replace oxygen sensor.

*Rich malfunction only.

V01829

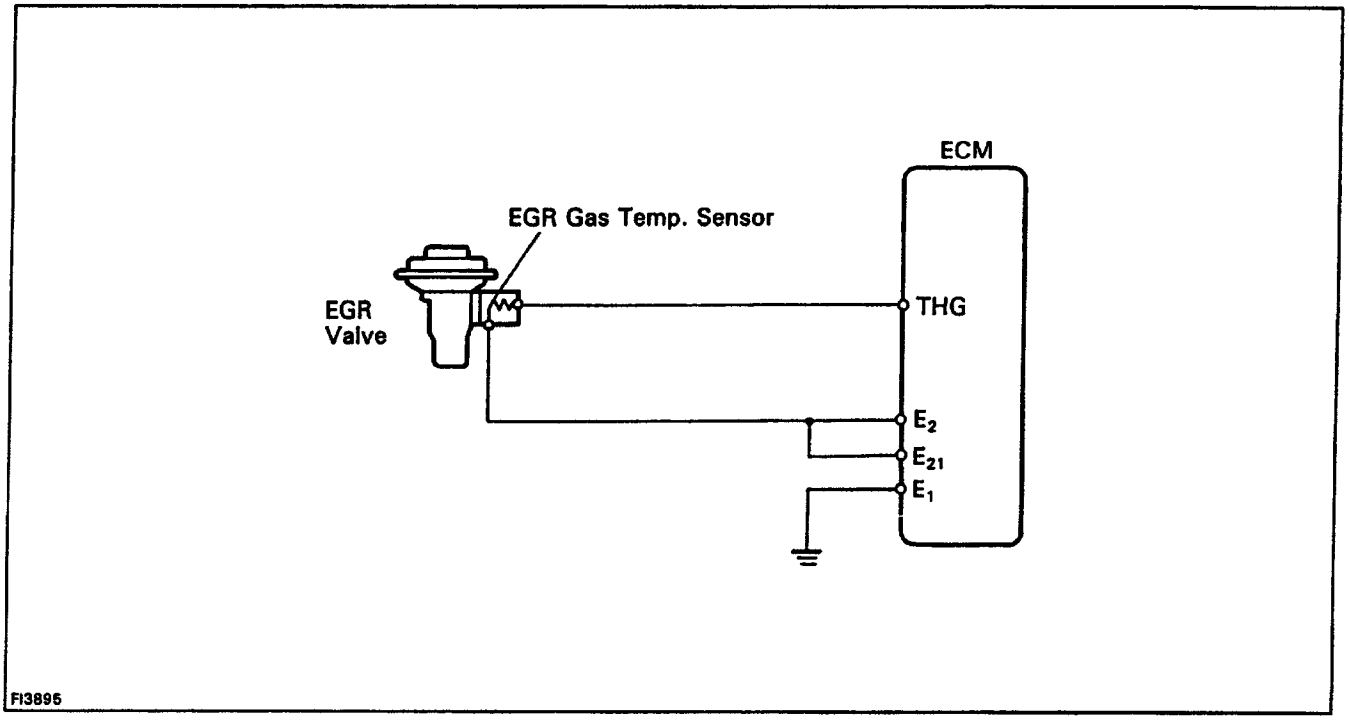

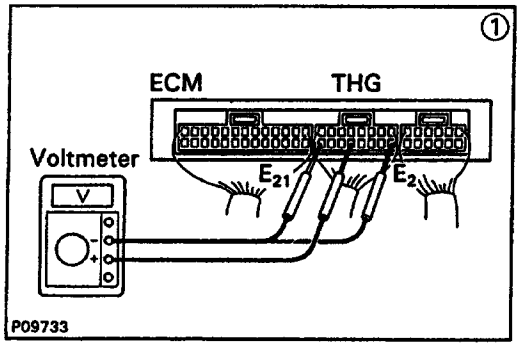

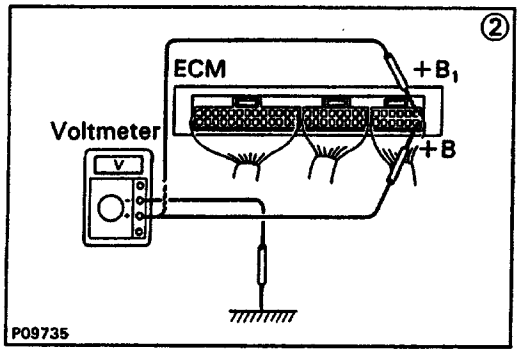

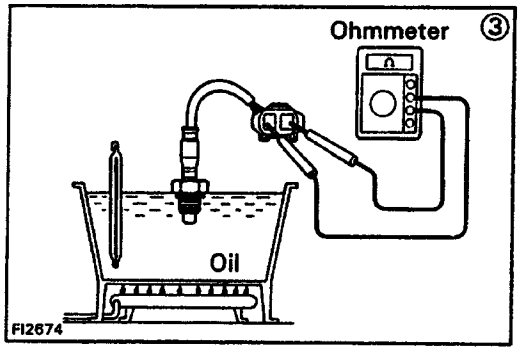

(1) There is no voltage between ECM terminals THG and E2 (E21) Engine running at 2.000 rpm)

↓

(2) Check that there is voltage between ECM terminal + B (+ B1) and body ground. UG SW ON)

OK → ↓

NO → Refer to No. 1.

↓

Check wiring between ECM terminal E, and body ground.

OK → ↓

BAD → Repair or replace.

↓

Check EGR system.

BAD → Repair or replace.

OK → ↓

(3) Check EGR gas temp. sensor

BAD → Replace EGR gas temp. sensor.

OK → Check wiring between ECM and EGR gas temp. sensor.

OK → Try another ECM.

BAD → Repair or replace.

V03951

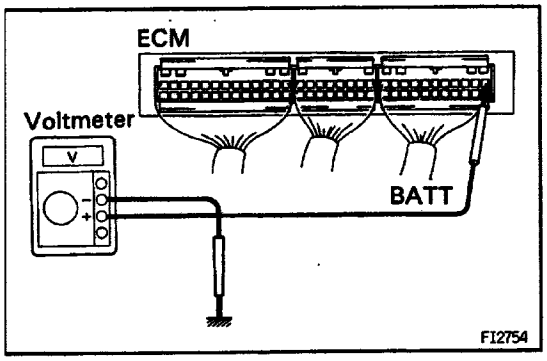

MFI SYSTEM CHECK PROCEDURE (4WD A/T)

HINT:

- Do all voltage measurements with the connec– tors connected.
- Verify that the battery voltage is 11 V or more when the ignition switch is in ”ON” position.
  Using a voltmeter with high impedance (10 kΩ/V minimum), measure the voltage at each terminal of the wiring connector.

ECM Terminals RWD A/T)

Symbol	Terminal Name	Symbol	Terminal Name
E_{01}	ENGINE GROUND	TE_2	DLC1
E_{02}	ENGINE GROUND	* Ox_2	OXYGEN SENSOR (SUB)
No.10	INJECTOR	THG	EGR GAS TEMPERATURE SENSOR
No.20	INJECTOR	THW	ENGINE COOLANT TEMPERATURE SENSOR
Fpu	FUEL PRESSURE CONTROL VSV	IDL	THROTTLE POSITION SENSOR
N	PNP SWITCH	THA	INTAKE AIR TEMPERATURE SENSOR
AS	PAIR VALVE	VTA	THROTTLE POSITION SENSOR
2	PNP SWITCH	Vs	VOLUME AIR FLOW METER
* EGR	EGR VSV	Vc	VOLUME AIR FLOW METER
L	PNP SWITCH	Vcc	THROTTLE POSITION SENSOR
S_1	No.1 SOLENOID	E_2	SENSOR GROUND
IGt	IGNITER	STA	SORTER SWITCH
S_2	NO..2 SOLENOID	OD_1	CRUISE CONTROL COMPUTER
SPD_2	SPEED SENSOR	SPD_1	SPEED SENSOR
S_L	SL SOLENOID	DG	DLC 1
Ne	DISTRIBUTOR	4WD	4WD SWITCH
IGf	IGNITER	L_4	TRANSFER POSITION SWITCH
HT_1	OXYGEN SENSOR HEATER (MAIN)	P	PATTERN SELECT SWITCH
* HT_2	OXYGEN SENSOR HEATER (SUB)	STP	STOP LIGHT SWITCH
STJ	COLD START INJECTOR	W	MALFUNCTION INDICATOR LAMP
E_1	ENGINE GROUND	OD_2	CRUISE CONTROL COMPUTER
V_F	DLC1	E_{21}	SENSOR GROUND
KNK	KNOCK SENSOR	$+B_1$	MAIN RELAY
TE_1	DLC 1	BATT	BATTERY POSITIVE VOLTAGE
Ox_1	OXYGEN SENSOR (MAIN)	+B	MAIN RELAY

*: California only

ECM Terminals

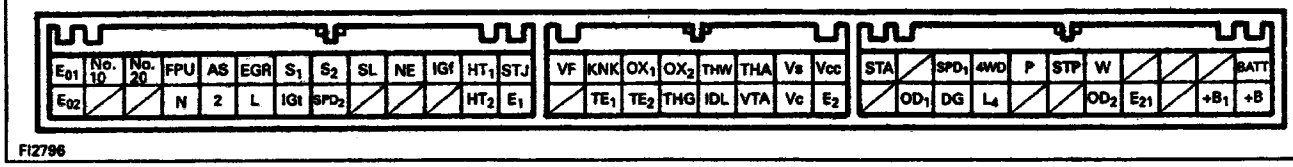

Voltage at ECM Connectors (4WD A/T)

No..	Terminals	Condition		STD voltage	See page
1	BATT – E_1	–		9 – 14	EG1–146
	+B – E_1	Ignition switch ON			
	+B_1 – E_1				
2	IDL – E_2 (E_{21})	Ignition switch ON	Throttle valve open	9 – 14	EG1–148
	Vcc – E_2 (E_{21})		–	4.5 – 5.5	
	VTA – E_2 (E_{21})		Throttle valve fully closed	0.3 – 0.8	
			Throttle valve fully open	3.2 – 4.9	
3	Vc – E_2 (E_{21})	Ignition switch ON	–	6–10	EG1–150
	Vs – E_2 (E_{21})		Measuring plate fully closed	0.5 – 2.5	
			Measuring plate fully open	5 – 10	
		Idling		2 – 8	
	THA – E_2 (E_{21})	Ignition switch ON	Intake air temperature 20°C (68°F)	0.5 – 3.4	
4	THW – E_2 (E_{21})	Ignition switch ON	Coolant temperature 80°C (I76°F)	0.2 – 1.0	EG1–152
5	STA – E_1	Ignition switch START position		6–12	EG1–153
6	No. 10 – E_{01} No. 20 – E_{02}	Ignition switch ON		9 – 14	EG1–154
7	IGt – E_1	Idling		0.7–1.0	EG1–155
8	W – E_1	No trouble (MIL off) and engine running		9 – 14	EG1–156
9	STJ – E_1	Ignition switch START position	Coolant temperature 80°C (176°F)	6–12	EG1–157
10	STP – E_1	Stop light switch ON		7.5 – 14	EG1–158

V01831

No.	Terminals	Trouble	Condition	STD voltage
1	BATT – E_1	No voltage	–	9 – 14 V
	+B – E_1		Ignition switch ON	
	$+B_1$ – E_1			

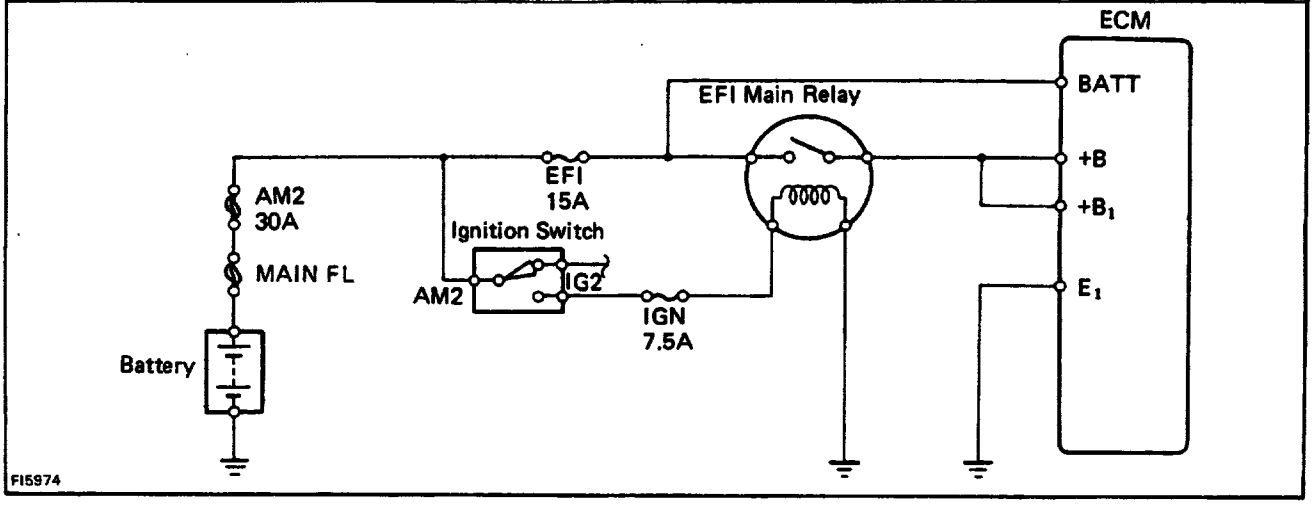

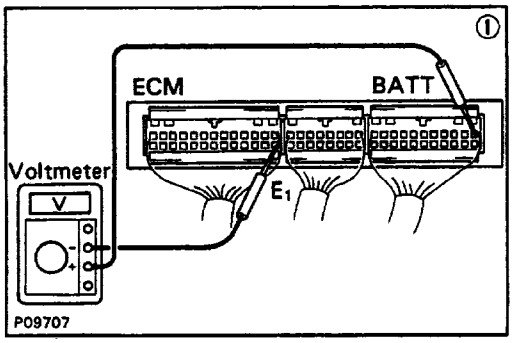

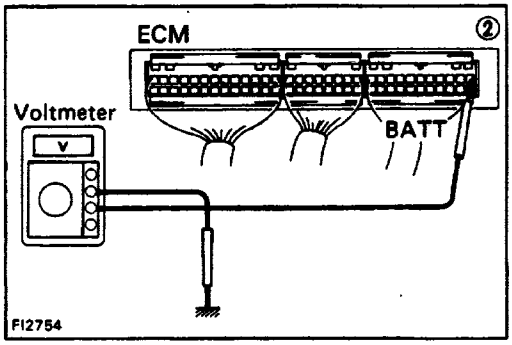

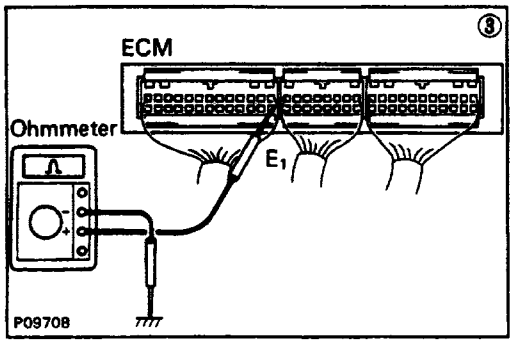

• **BATT – E 1**

(1) There is no voltage between ECM terminals BATT and E1.

↓

(2) Check that there is voltage between ECM terminal BATT and body ground.

NO → (3) Check wiring between ECM terminal E1 and body ground.

(3) OK → Try another ECM.

(3) BAD → Repair or replace.

(2) OK → Check fuse and fusible link.

Check fuse and fusible link. BAD → Replace.

Check fuse and fusible link. OK → Check wiring between fuse and ECM.

Check wiring between fuse and ECM. BAD → Repair or replace.

V01833

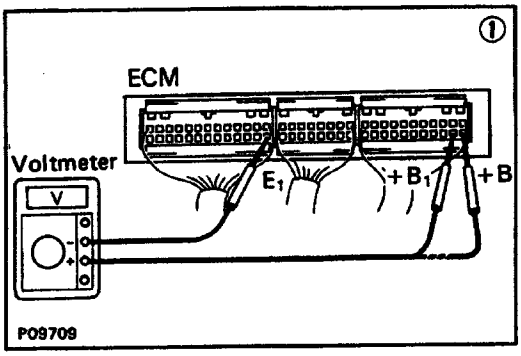

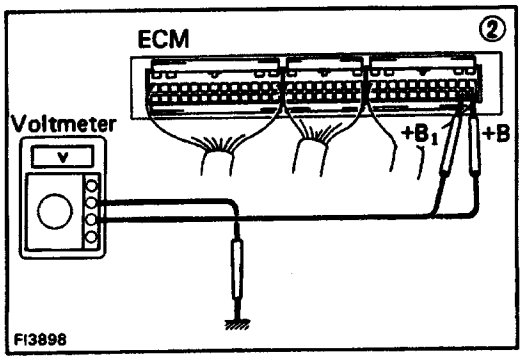

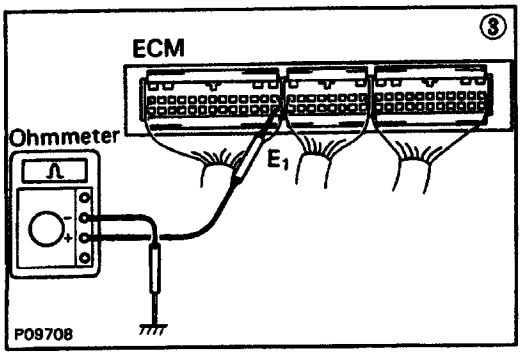

- **+B (+B,) – E 1**

(1) There is no voltage between ECM terminals + B (+ B1) and E1 **(IG SW ON)**

(2) Check that there is voltage between ECM terminal +B (+B1) and body ground. **(IG SW ON)**

NO → OK

(3) Check wiring between ECM terminal E1 and body ground.

OK → Try another ECM.

BAD → Repair or replace.

Check fuse, fusible link and ignition switch. BAD → Repair or replace.

OK

Check EF I main relay. BAD → Replace.

OK

Check wiring between EF I main relay and battery. BAD → Repair or replace.

OK

Check wiring between EFI main relay and ECM terminal +B (B+1). BAD → Repair or replace.

V01832

No.	Terminals	Trouble	Condition		STD Voltage
2	IDL – E_2 (E_{21})	No voltage	Ignition switch ON	Throttle valve open	9 – 14 V
	Vcc – E_2 (E_{21})			–	4.5 – 5.5 V
	VTA – E_2 (E_{21})			Throttle valve fully dosed	0.3 – 0.8 V
				Throttle valve fully open	3.2 – 4.9 V

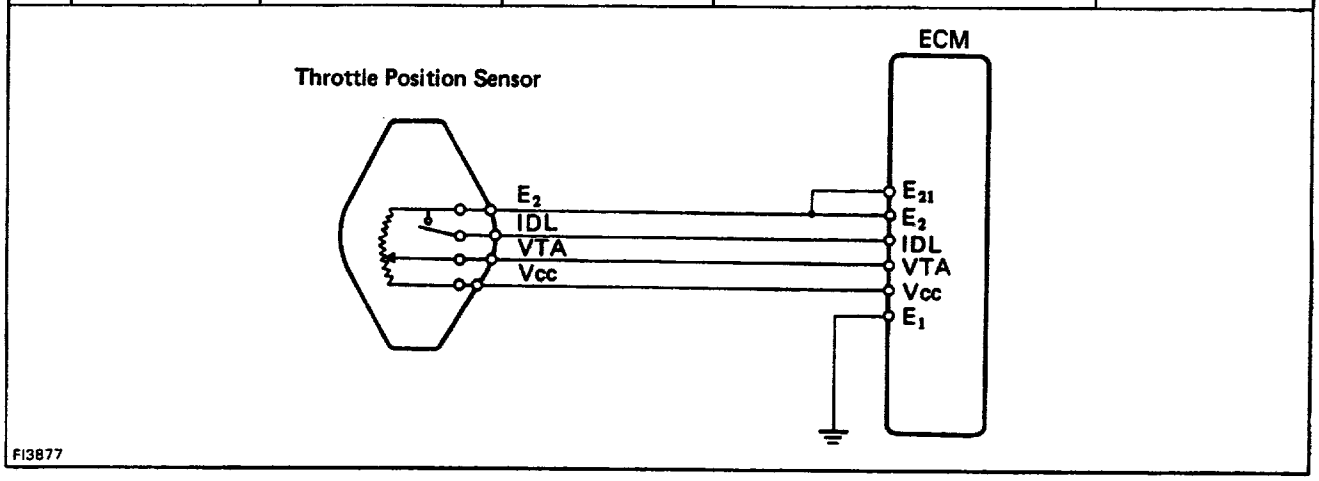

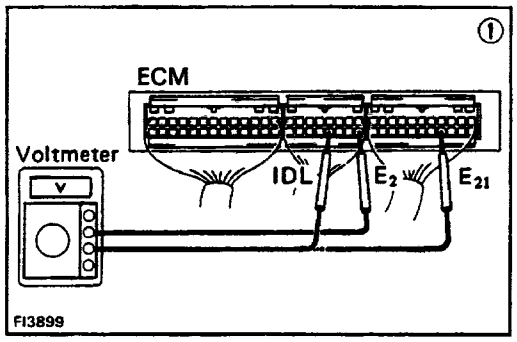

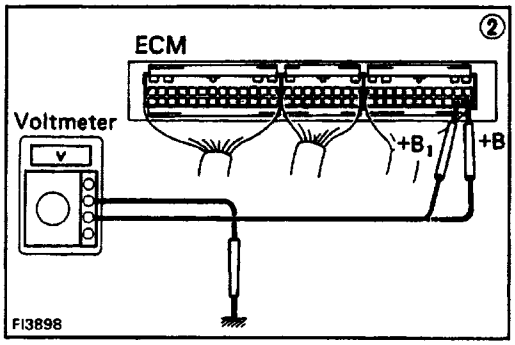

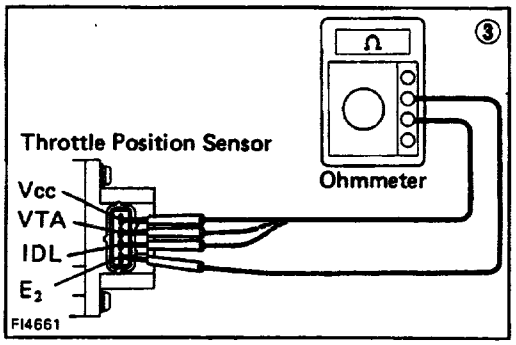

• **IDL – EZ (E21)**

(1) There is no voltage between ECM terminals IDL and E2 (E21). **(IG SW ON)** (Throttle valve open)

(2) Check that there is voltage between ECM terminal + B (+B1) and body ground**. (IG SW ON)**

NO

Refer to No. 1. — BAD → Replace or repair.

OK

OK

Check wiring between ECM terminal E, and body ground.

OK

BAD

Replace or repair.

BAD

(3) Check throttle position sensor.

BAD

OK

Replace or repair throttle position sensor.

Check wiring between ECM and throttle position sensor.

OK

Try another ECM.

V01834

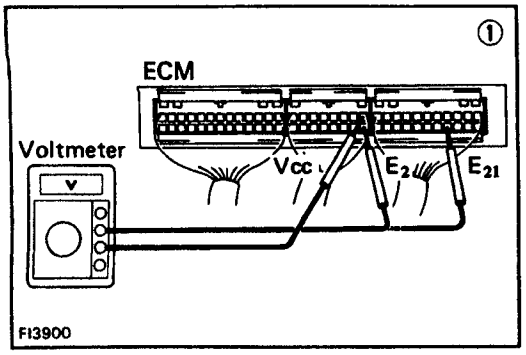

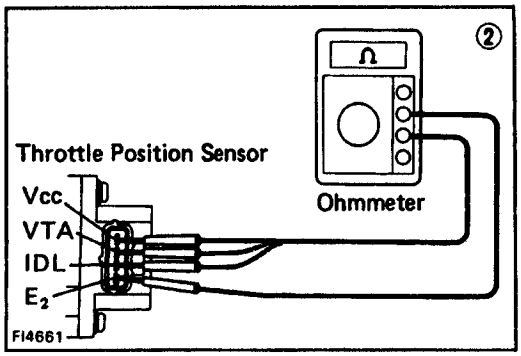

• **FCC – EZ (Et1)**

(1) There is no voltage between ECM terminals FCC and E2. **(IG SW ON)**

Check that there is voltage between ECM terminals +B (+ B1) and E1 **(IG SW ON)**

OK → (2) Check throttle position sensor.

NO → Refer to No. 11.

BAD → Repair or replace.

OK → Check wiring between ECM and throttle position sensor.

OK → Try another ECM.

BAD → Repair or replace wiring.

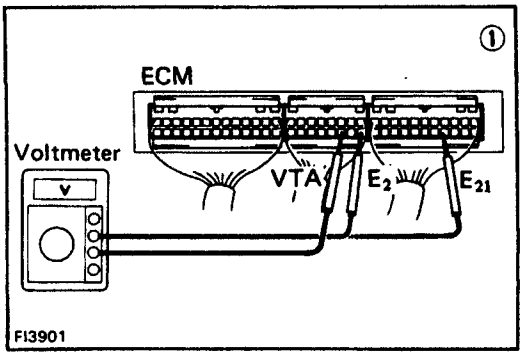

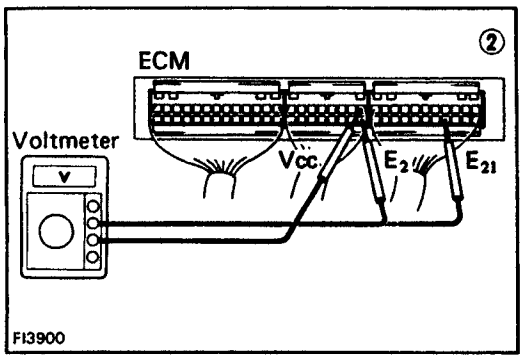

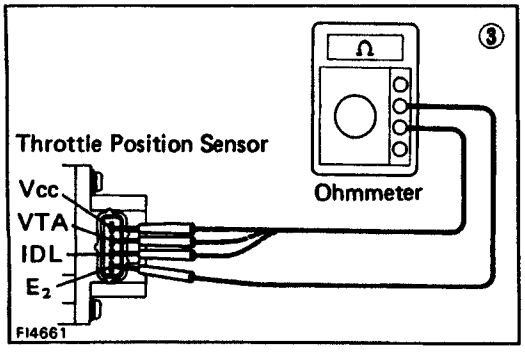

• **VTA – E2 (E21)**

(1) There is no voltage between ECM terminals VTA and E2 (E20. (IG SW ON)

(2) Check that there is voltage between ECM terminals FCC and E2 (E20. **(IG SW ON)**

OK → (3) Check throttle position sensor.

NO → Perform inspection of FCC – Et (E21).

BAD → Repair or replace.

OK → Check wiring between ECM and throttle position sensor.

BAD → Repair or replace.

OK → Try another ECM.

No.	Terminal:	Trouble	Condition		STD Voltage
3	Vc – E_2 (E_{21})	No voltage	Ignition switch ON	–	6 – 10 V
	Vs – E_2 (E_{21})			Measuring plate fully dosed	0.5 – 2.5 V
				Measuring plate fully open	5 – 10 V
			Idling		2 – 8 V
	THA – E_2 (E_{21})		Ignition –switch ON	Intake air temperature 20˚C (68˚ F)	0.5 – 3.4 V

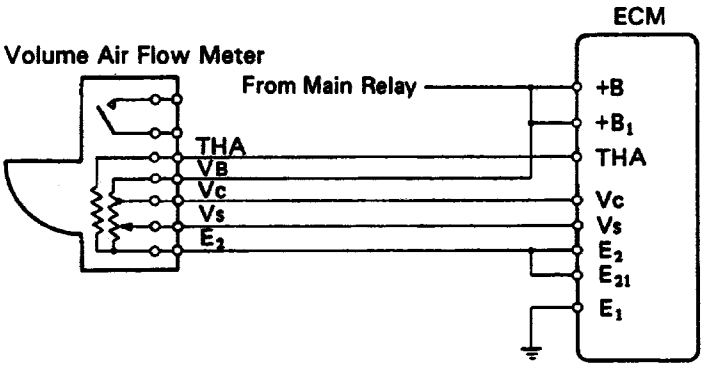

FI3881

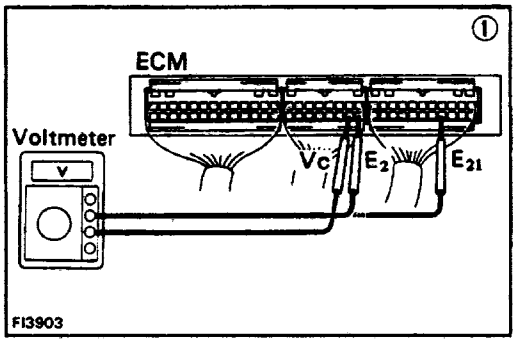

FI3903

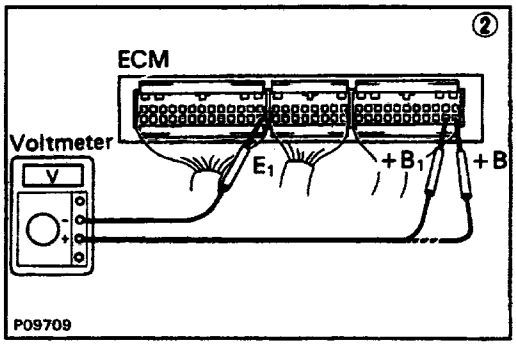

P09709

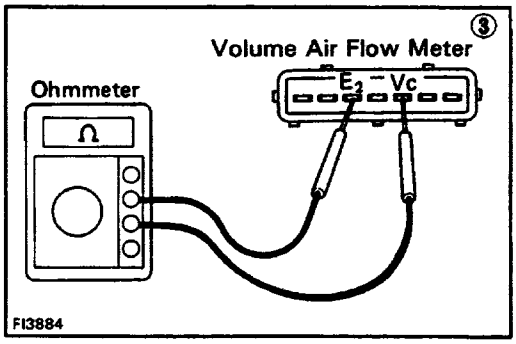

FI3884

• **Vc– E2 (E21)**

(1) There is no voltage between ECM terminals Vc and EZ (E21) **(IG SW ON)**

(2) Check that there is voltage between ECM terminals + B (+ B1) and E1. **(IG SW ON)**

OK — **NO**

(3) Check volume air flow meter. — Refer to No. t .

BAD — **OK**

Replace or repair volume air flow meter. — Check wiring between ECM and volume air flow meter.

OK — BAD

Try another ECM. — Replace or repair wiring.

V01836

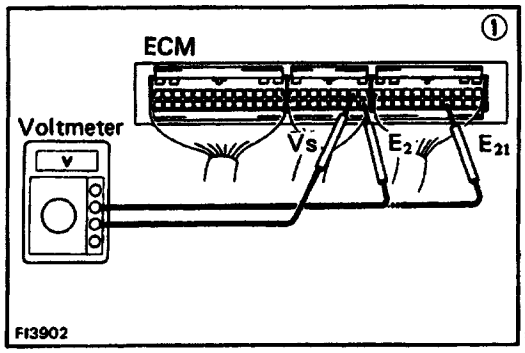

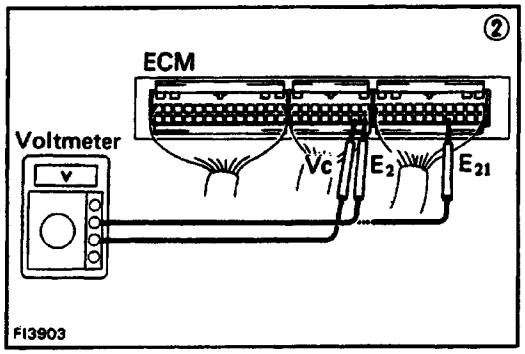

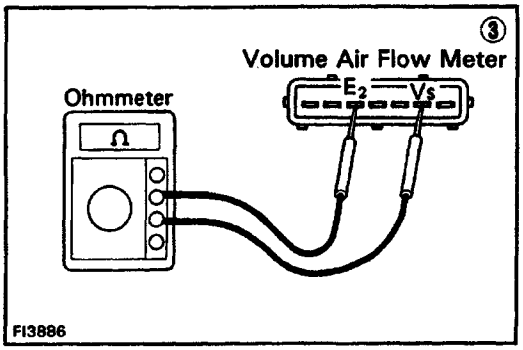

- **Vs – E2 (E21)**

(1) There is no voltage between ECM terminals Vs and E2 (E21) **(IG SW ON)**

↓

(2) Check that there is voltage between ECM terminals Vc and E2 (E21). **(IG SW ON)**

↓ **OK** / **NO** → Refer to FCC – E2 (E21). → BAD → Repair or replace.

↓ (3) Check volume air flow meter. → BAD → Repair or replace.

↓ **OK**

↓ Check wiring between ECM and volume air flow meter. → BAD → Repair or replace.

↓ **OK**

Try another ECM.

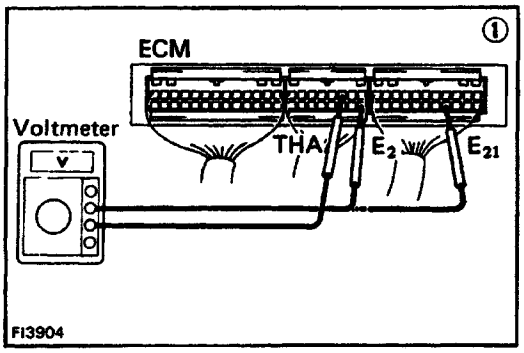

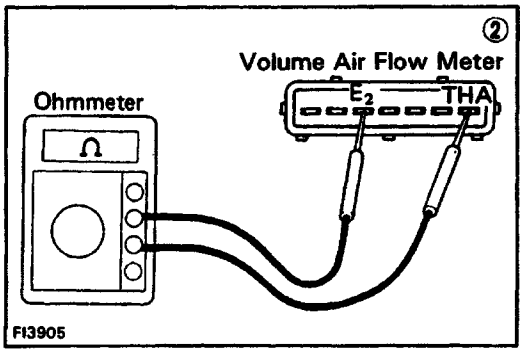

- **THA – E2 (E21)**

(1) There is no voltage between ECM terminals THA and E2 (E21). **(IG SW ON)**

↓

Check that there is voltage between ECM terminal + B (+ B1) and body ground **(IG SW ON)**

↓ **OK** / **NO** → Refer to No. 1.

↓ (2) Check intake air temp. sensor.

↓ BAD → Replace volume air flow meter.

↓ **OK** → Check wiring between ECM and intake air temp. sensor.

↓ **OK** / BAD → Repair or replace wiring.

↓

Try another ECM.

V01837

No.	Terminal	Trouble	Condition		STD Voltage
4	THW – E_2 (E_{21})	No Voltage	Ignition switch ON	Coolant temperature 80°C (176°F)	0.2 – 1.0 V

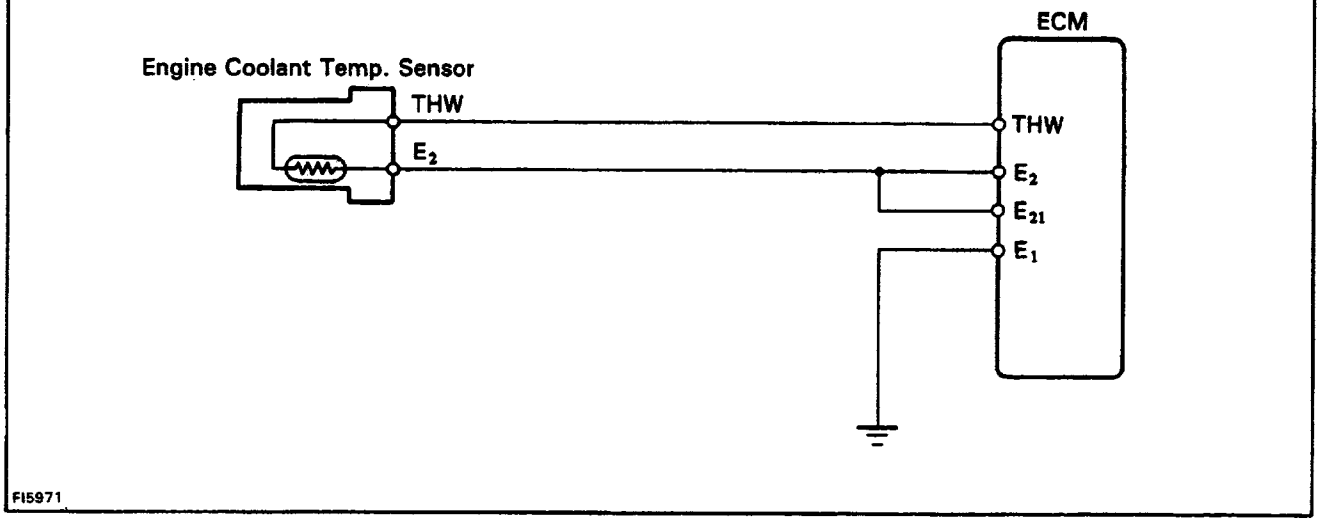

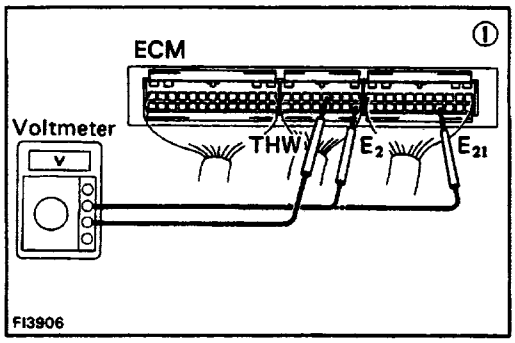

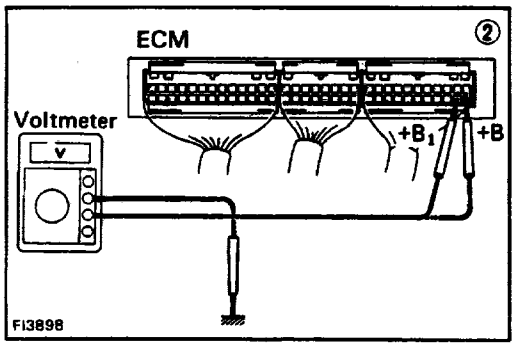

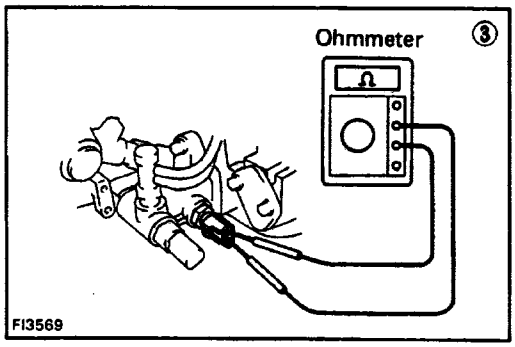

(1) There is no voltage between ECM terminals THW and EZ (E21–**(IG SW ON)**

(2) Check that there is voltage between EC M terminal + B 1 (+ B1) and body ground. **(IG SW ON)**

OK → Check wiring between ECM terminal E, and body ground.

NO → Refer to No. 1.

OK → (3) Check engine coolant temp. sensor.

BAD → Repair or replace.

BAD → Replace engine coolant temp. sensor.

OK → Check wiring between ECM and engine coolant temp. sensor.

OK → Try another ECM.

BAD → Repair or replace.

V01838

No.	Terminals	Trouble	Condition	STD Voltage
5	STA – E_1	No voltage	Ignition switch START position	6 – 12 V

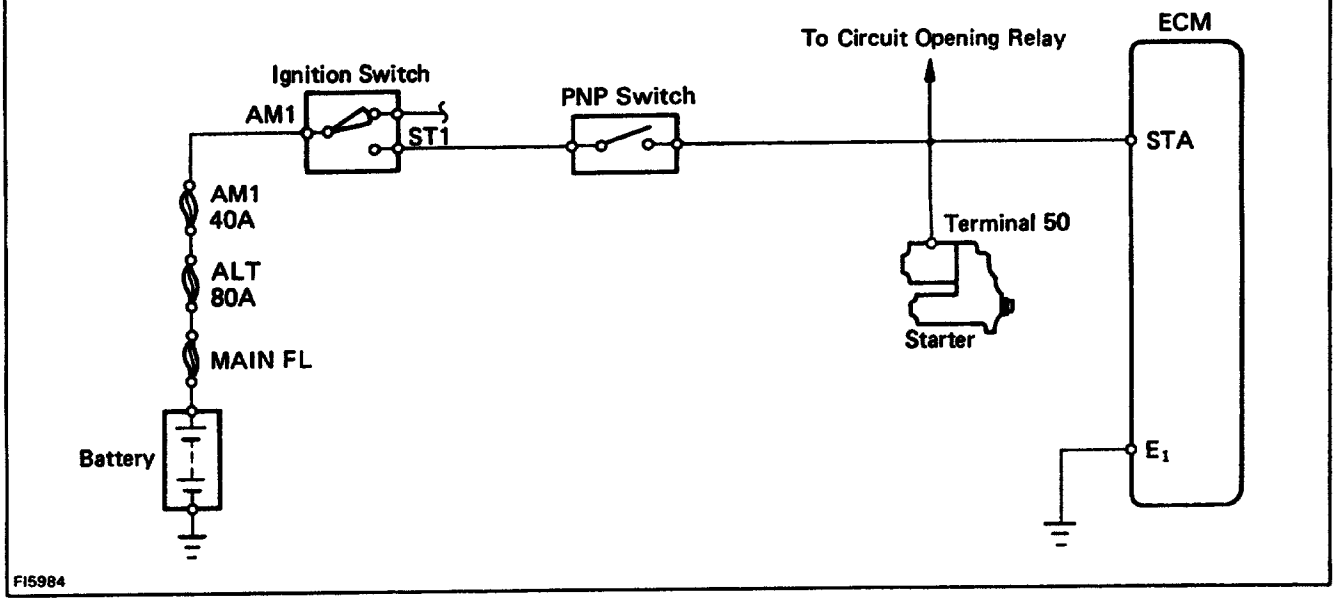

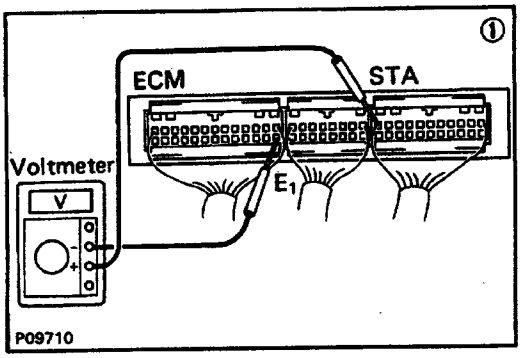

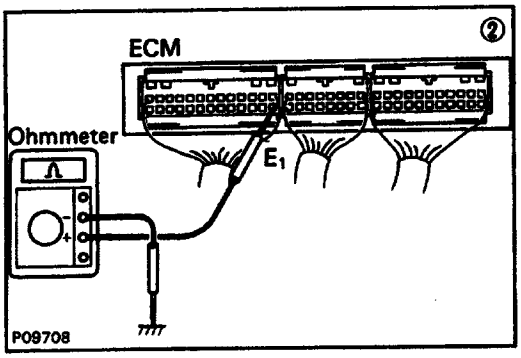

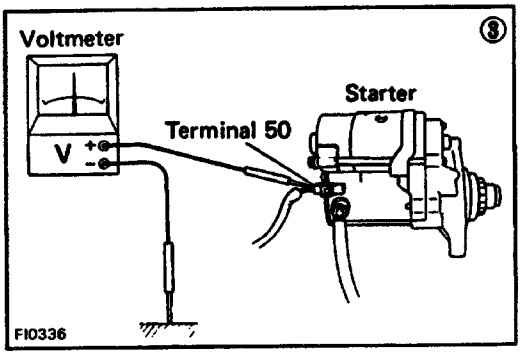

(1) There is no voltage between ECM terminals STA and E1 **(IG SW START)**

Check starter operation.
- OK → Check wiring between ECM and ignition switch terminal ST.
  - OK → (2) Check wiring between ECM terminal E, and body ground.
    - OK → Try another ECM.
    - BAD → Repair or replace.
  - BAD → Repair or replace.
- BAD → Check fusible link, battery, wiring and ignition switch.
  - BAD → Repair or replace.
  - OK → (3) Cheek that there is voltage at terminal 50 of starter. **(IG SW ST) STD Voltage: 6 – 12 v**
    - OK → Check starter. (See page ST–4)
    - NO → Check wiring between ignition switch ST1 terminal and starter terminal 50.

V01839

No.	Terminals	Trouble	Condition	STD voltage
6	No. 10 – E_{01} No. 20 – E_{02}	No voltage	Ignition switch ON	9 – 14 V

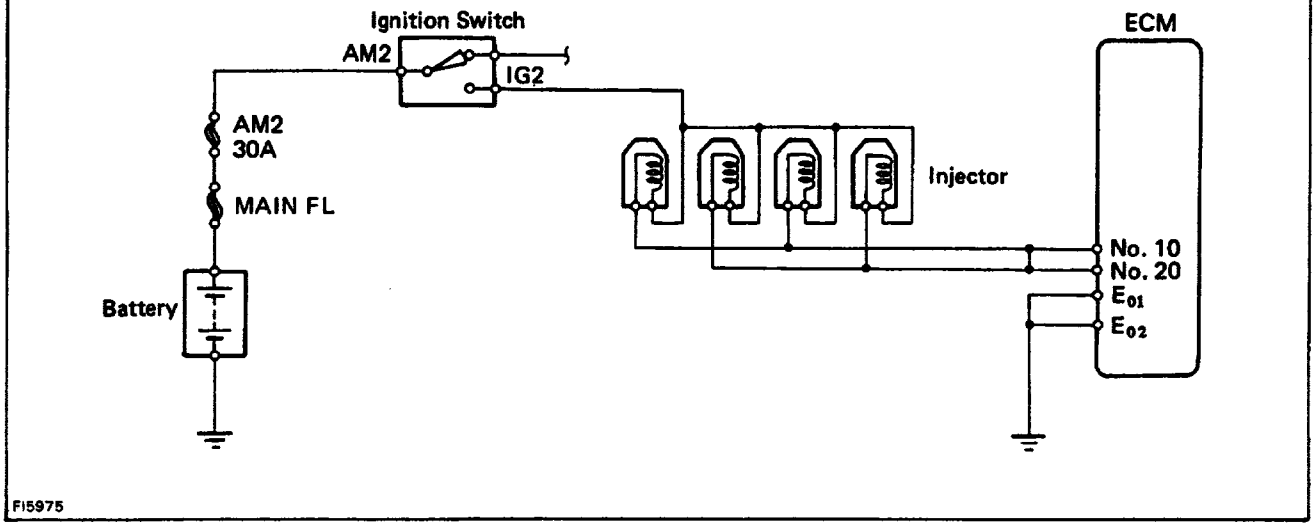

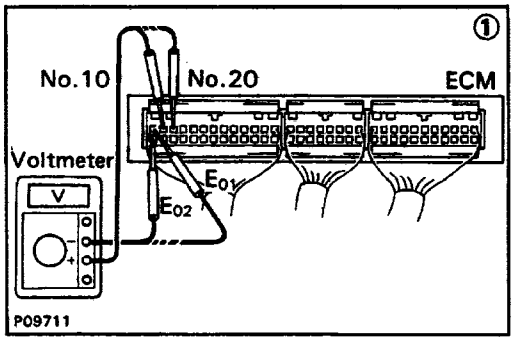

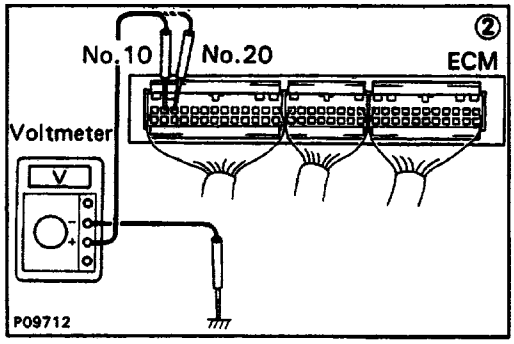

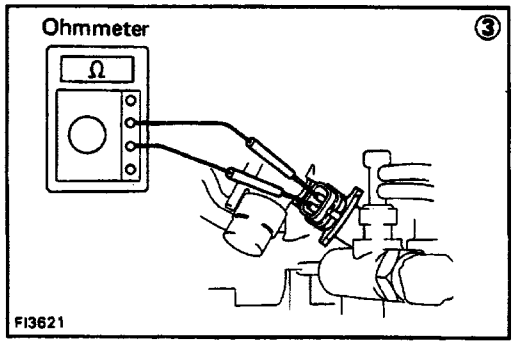

(1) There is no voltage between ECM terminals No. 10 and/or No. 20 and E0, and/or E02– **(IG SW ON)**

↓

(2) Check that there is voltage between ECM terminal No. 10 and/or No. 20 and body ground.

NO → **OK**

OK → Check wiring between ECM terminal Eo, and/or E02 and body ground.

OK → Try another ECM.

BAD → Repair or replace.

NO → Check fusible link and ignition switch.

BAD → Repair or replace.

OK →

(3) Check resistance of magnetic coil in each injector.
STD resistance: 13.4 – 14.2Ω

NO → Replace injector.

OK → Check wiring between ECM terminal No. 10 and/or No. 20 and battery.

BAD → Repair or replace.

V01840

No.	Terminals	Trouble	Condition	STD Vol tage
7	IGt – E_1	No voltage	Idling	0.7 – 1.0 V

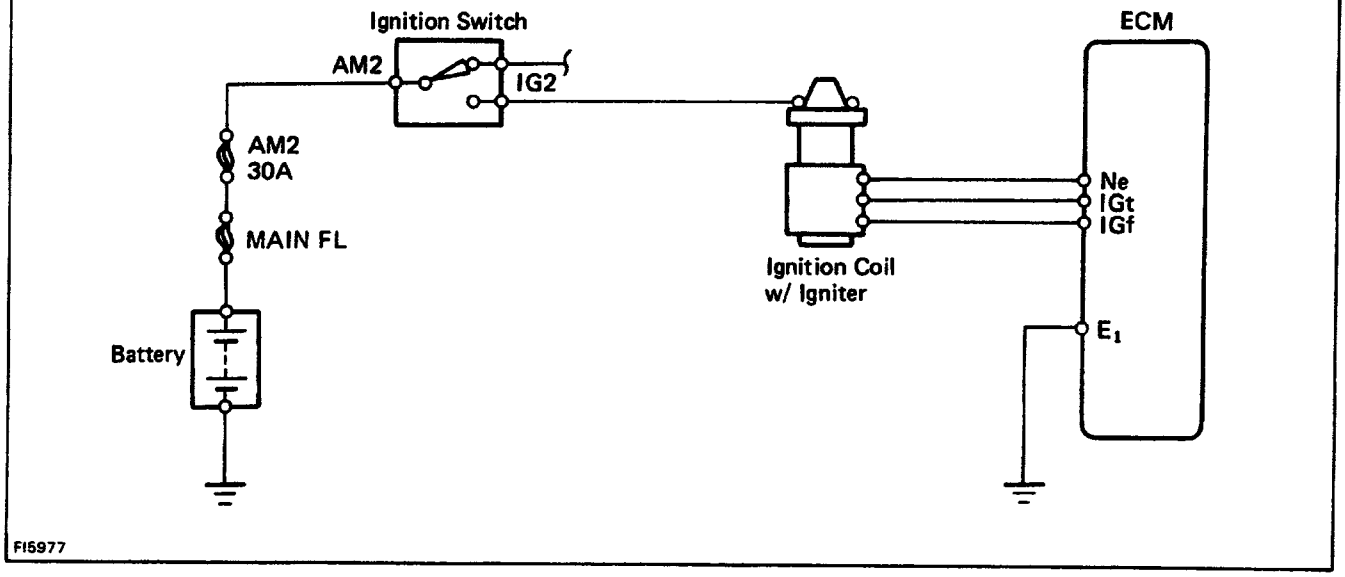

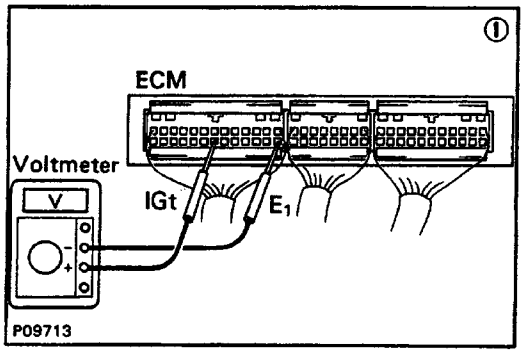

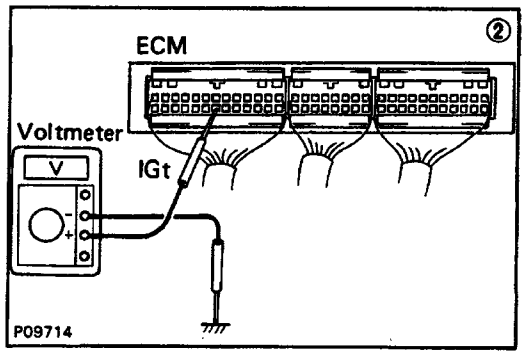

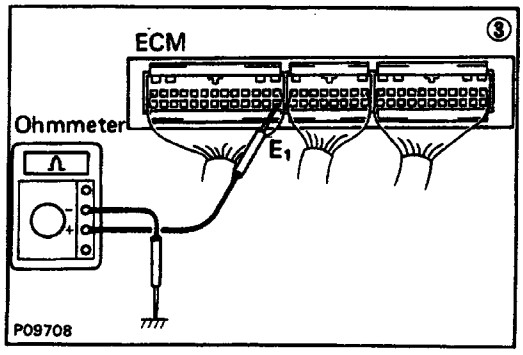

(1) There is no voltage between ECM terminals IGt and E1 **(idling)**

(2) Check that there is voltage between ECM terminal IGt and body ground. **(Idling)**

NO

OK

(3) Check wiring between ECM terminal E1 and body ground.

BAD

Refer to No. 1. — BAD → Repair or replace.

OK

Check wiring between igniter and distributor. — BAD → Repair or replace.

OK

Check distributor. — BAD → Replace.

OK

Check wiring between ECM and igniter. — BAD → Repair or replace.

OK

Check igniter. — BAD → Repair or replace.

OK

Try another ECM.

No.	Terminal:	Trouble	Condition	STD Voltage
8	W – E_1	No voltage	No trouble (MIL off) and engine running	9 – 14 V

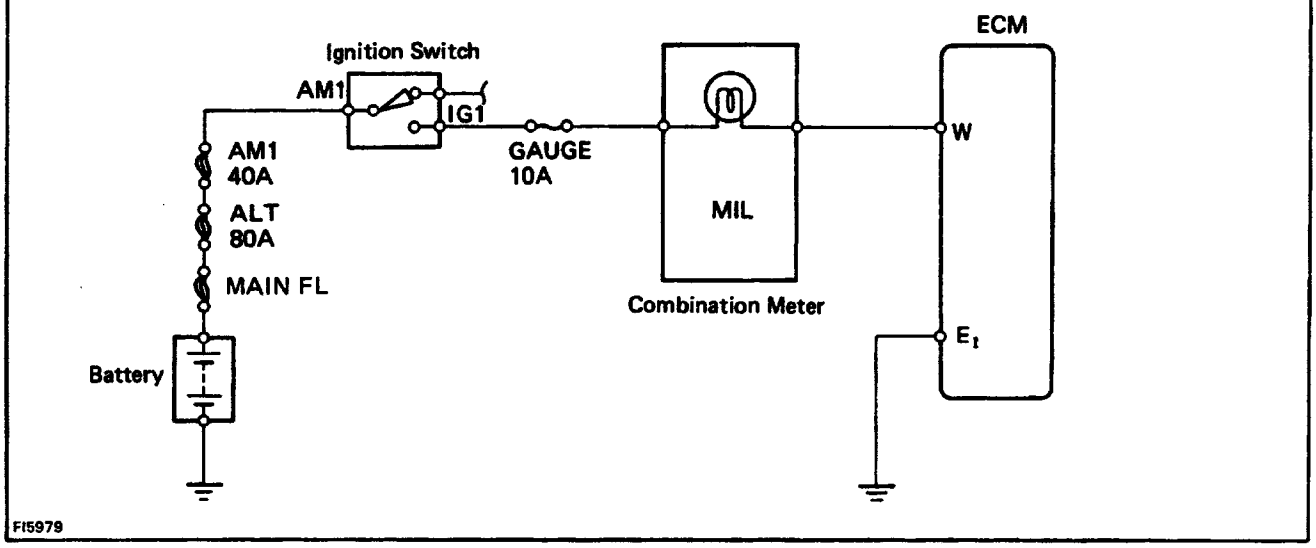

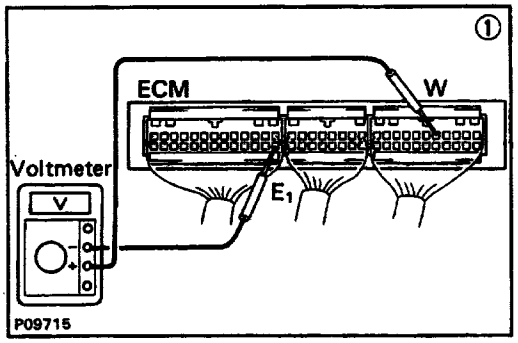

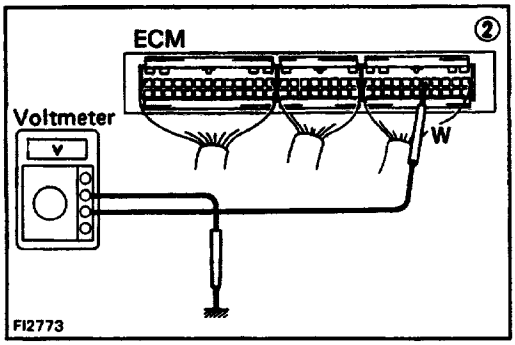

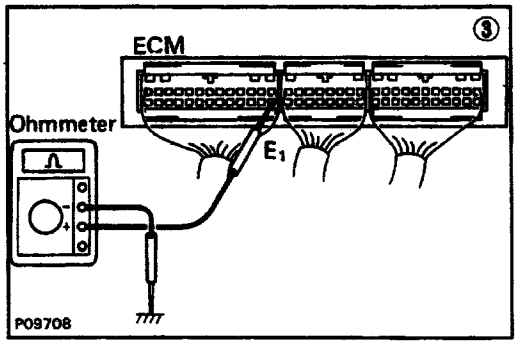

(1) There is no voltage between ECM terminals W and E1 **(idling)**

(2) Check that there is voltage between ECM terminal W and body ground.

NO — **OK**

(3) Check wiring between ECM terminal E, and body ground.

OK — Try another ECM.

BAD — Repair or replace.

Check GAUGE fuse (10 A) and MIL.

OK

BAD — Repair or replace.

Fuse blows again
ECM BAD

Check wiring between ECM terminal W and fuse. → Repair or replace.

No.	Terminal	Trouble	Condition		STD Voltage
9	STJ – E_1	No voltage	Ignition switch START position	Coolant temperature 80°C (176°F)	6 – 12 V

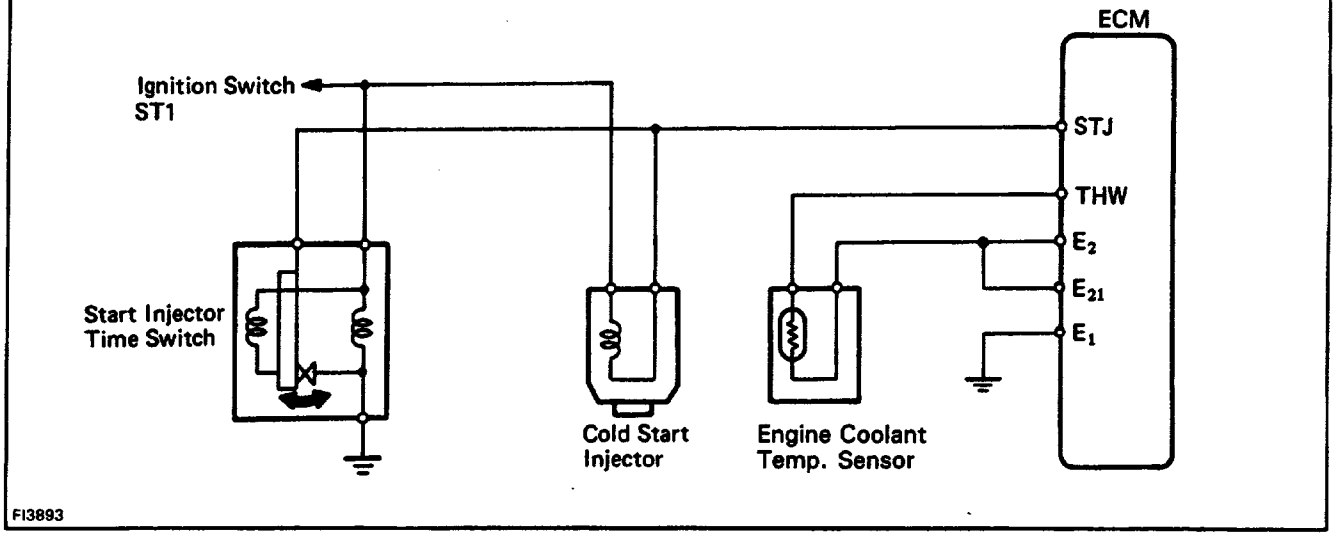

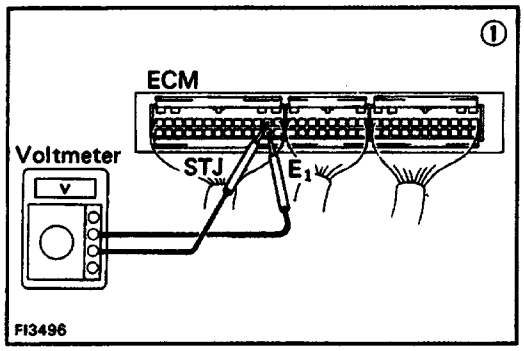

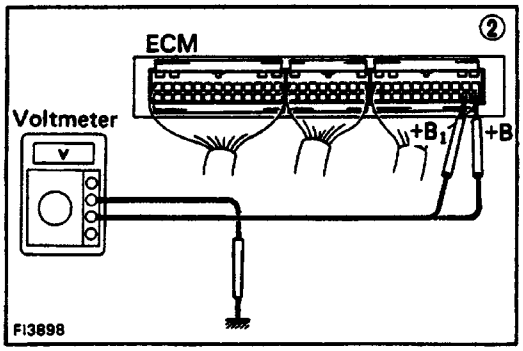

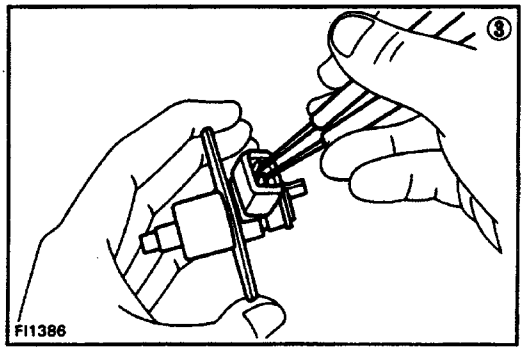

(1) There is no voltage between ECM terminals STJ and E1 **(IG SW START)**

↓

(2) Check that there is voltage between ECM terminal + B (+ B1) and body ground. **(IG SW ON)**

OK → ↓ | **NO** → Refer to No. 1.

↓

(3) Check cold start injector.

BAD → Replace cold start injector. → ↓

OK → Check wiring between ECM and cold start injector.

OK → ↓ | BAD → Repair or replace wiring.

Check wiring between ECM terminal E, and body ground.

↓

OK → Try another ECM.

V01843

No.	Terminals	Trouble	Condition	STD Voltage
10	STP – E_1	No voltage	Stop light switch ON	7.5 – 14 V

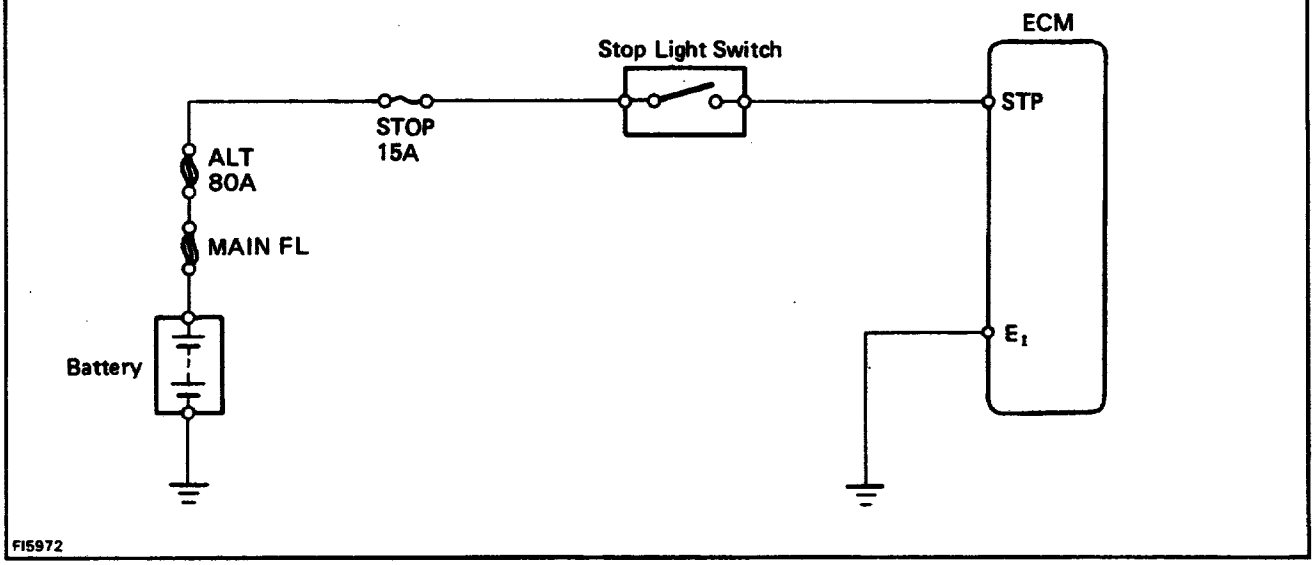

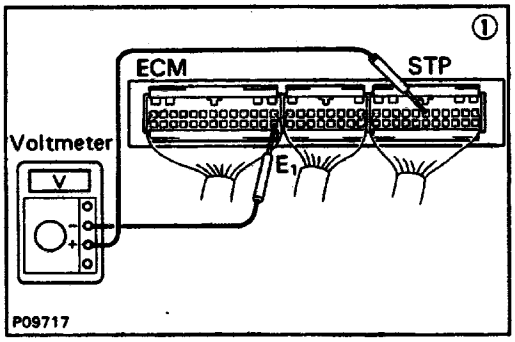

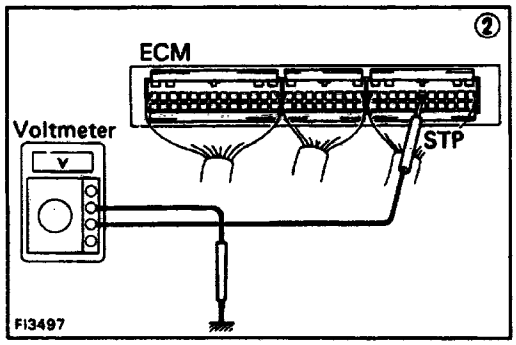

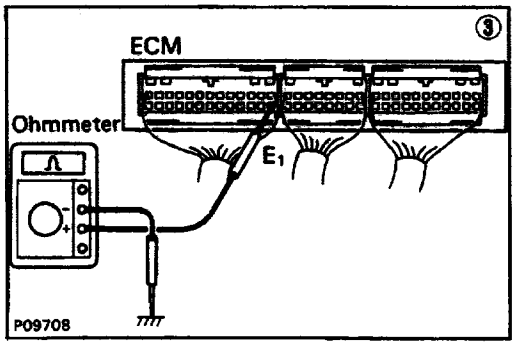

(1) There is no voltage between ECM terminals STP and E1.

(2) Check that there is voltage between ECM terminal STP and body ground when the brake pedal .is depressed.

NO — OK

(3) Check wiring between ECM terminal .E, and body ground.

OK — BAD

Try another ECM.

Repair or replace.

Check STOP fuse t 15A) and stop light switch. — BAD — Repair or replace.

OK

Check wiring between ECM terminal STP and battery. — BAD — Repair or replace.

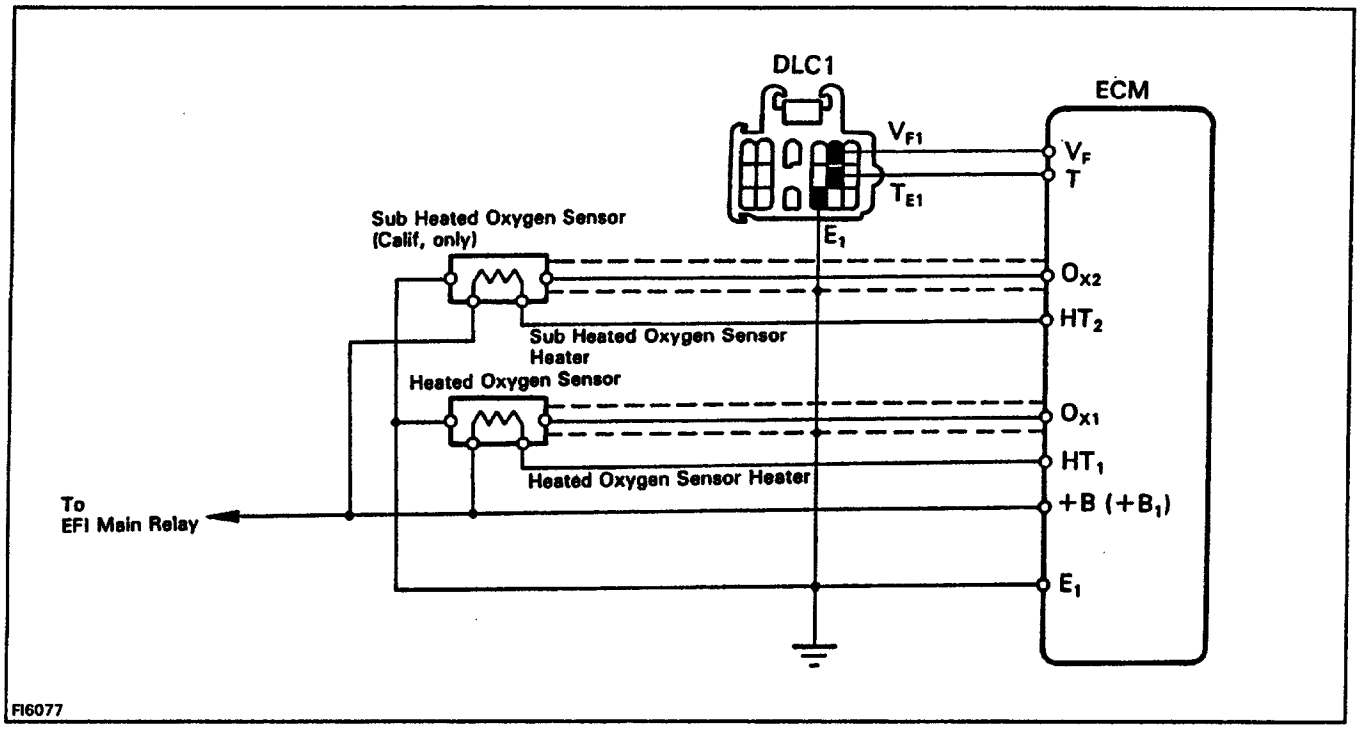

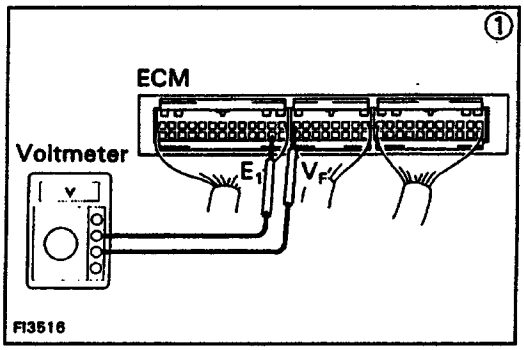

(1) There is no voltage between ECM terminals VF and E1

↓

Check that there is voltage between ECM terminal VF and body ground.

NO → ↓

OK →

Check wiring between ECM terminal E, and body ground.

OK → Try another ECM.

BAD → Repair or replace.

↓

Is air leaking into air induction system?

YES → Repair air leak.

↓ NO

Check spark plugs.

BAD → Repair or replace.

↓ OK

Check distributor and ignition system.

BAD → Repair or replace.

↓ OK

CONTINUED ON PAGE
EG1–160

V03955

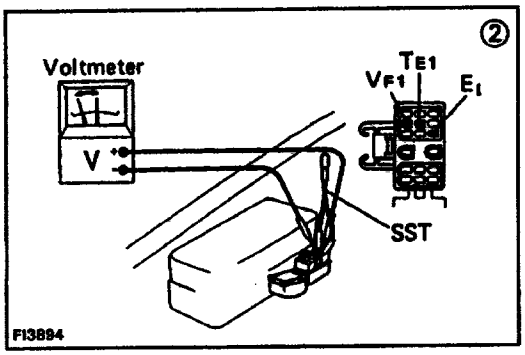

CONTINUED FROM PAGE
EG1–159

OK

Check fuel pressure. — BAD → Repair or replace.

OK

Check injector. — BAD → Repair or replace.

OK

Check cold start injector.' — BAD → Repair or Replace.

OK

Check volume sir fiow meter. — 6AD → Repair or replace.

OK

(1) Check operation of heater ox en sensor — OK → System normal.

6AD

Check wiring between heated oxy–gen sensor and ECM connector. — BAD → Repair wiring.

OK

Replace heated oxygen sensor.

*Rich malfunction only

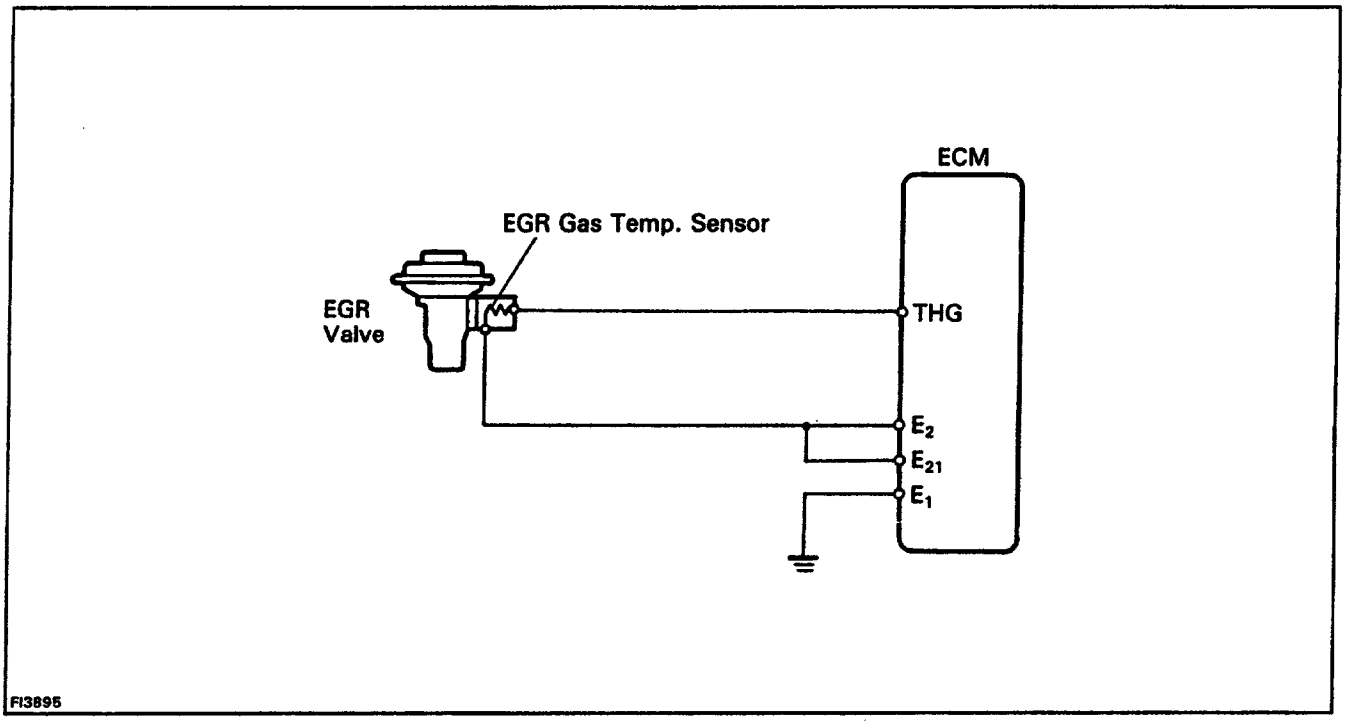

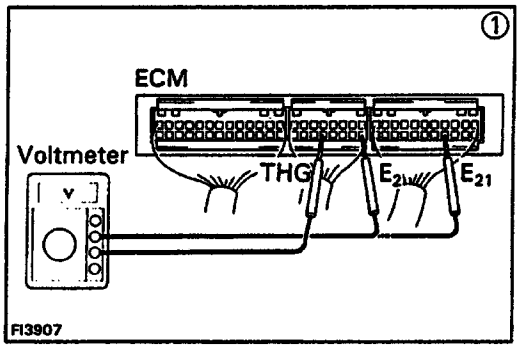

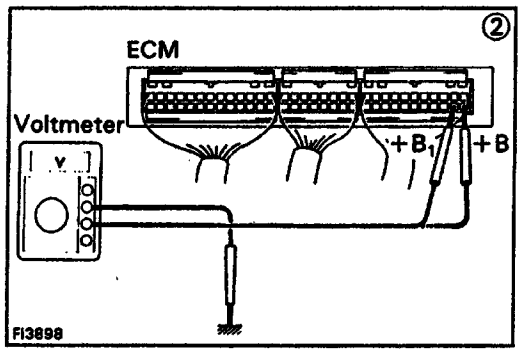

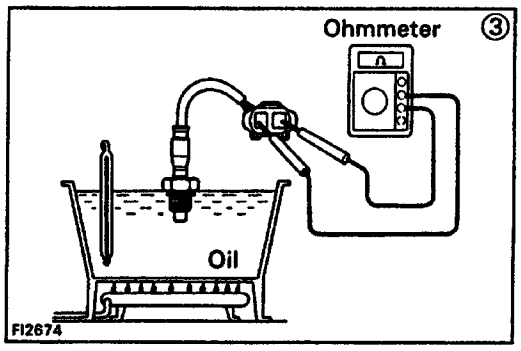

(1)There is no voltage between ECM terminals THG and Et (E21) (Engine running at 2,000 rpm)

(2) Check that there is voltage between ECM terminal +B (+B1) and body ground. **(IG SW ON)**

OK → Check wiring between ECM terminal E1 and body ground.

NO → Refer to No. 1 .

OK → Check EGR system.

BAD → Repair or replace.

OK → (3) Check EGR gas temp. sensor.

BAD → Replace EGR gas temp. sensor.

OK → Check wiring between ECM and EGR gas temp. sensor.

OK → Try another ECM.

BAD → Repair or replace.

BAD → Repair or replace.

V03952

VOLUME AIR FLOW (VAF) METER

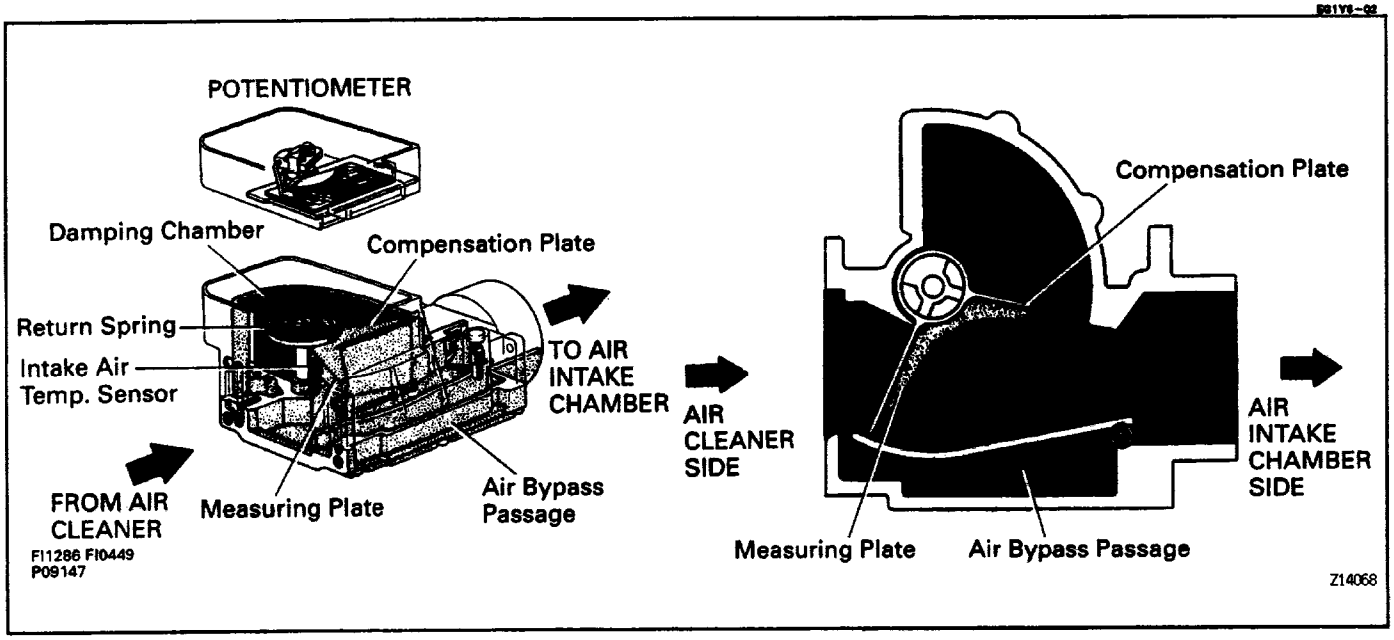

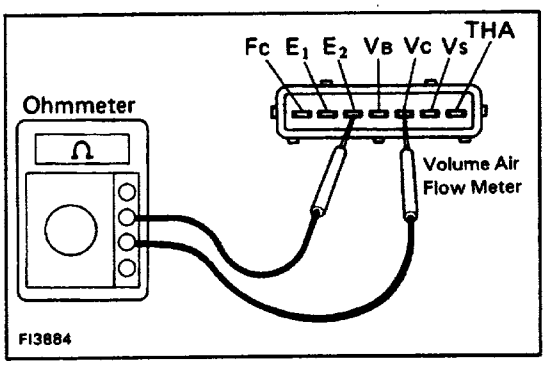

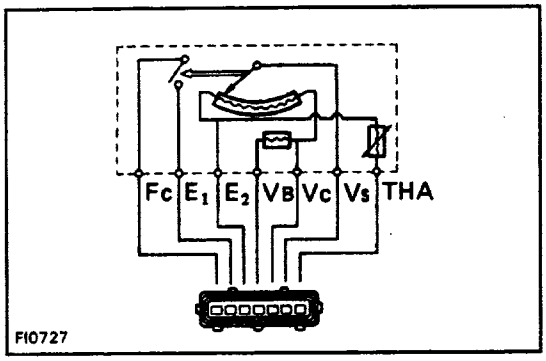

ON–VEHICLE INSPECTION

MEASURE RESISTANCE OF VOLUME AIR PLOW METER

(a) Disconnect the connector from the volume air flow meter.

(b) Using an ohmmeter, measure the resistance between each terminal.

Between terminals	Resistance	Temperature
E_2 – V_S	20 – 400 Ω	–
E_2 – V_C	100 – 300 Ω	–
E_2 – V_B	200 – 400 Ω	–
E_2 – THA	10 – 20 kΩ 4 – 7 kΩ 2 – 3 kΩ 0.9 – 1.3 kΩ 0.4 – 0.7 kΩ	–20°C (–4°F) 0°C (32°F) 20°C (68°F) 40°C (104°F) 60°C (140°F)
E_1 – F_C	Infinity	–

V02175

If not within specification, replace the volume air flow meter.

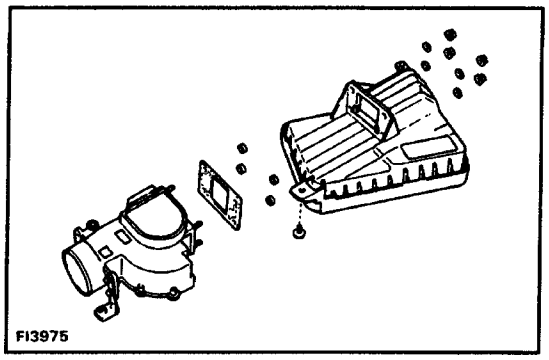

VAF METER REMOVAL

1. DISCONNECT INTAKE AIR CONNECTOR

2. REMOVE AIR CLEANER CAP WITH VOLUME AIR FLOW METER

(a) Disconnect the volume air flow meter connector.

(b) Remove the air cleaner cap with volume air flow meter.

3. REMOVE VOLUME AIR FLOW METER

Remove the bolt, 4 nuts, washers, volume air flow meter and gasket.

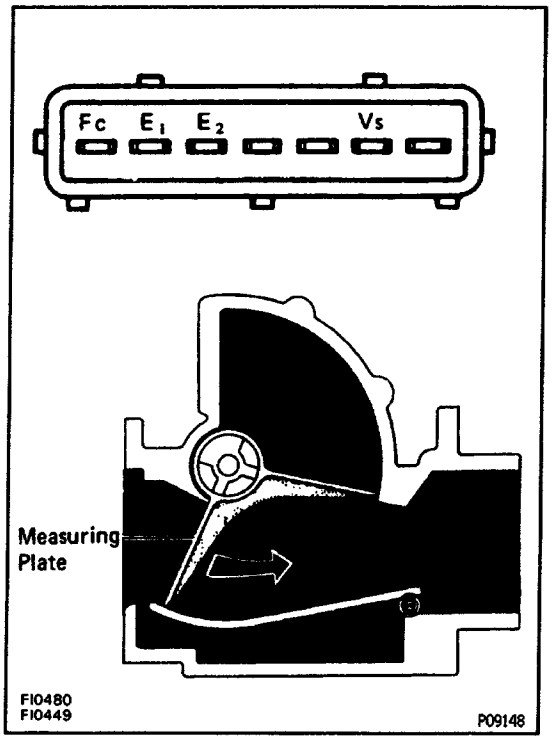

VAF METER INSPECTION

MEASURE RESISTANCE OF VAF METER

Using an ohmmeter, measure the resistance between each terminal by moving the measuring plate.

Between terminals	Resistance (Ω)	Measuring plate opening
E_1 – F_C	Infinity	Fully closed
	Zero	Other than closed position
E_2 – V_S	20 – 400	Fully closed
	20 – 1,000	Fully open

HINT: Resistance between terminals E2 and Vs will change in, a wave pattern as the measuring plate slowly opens.

VAF METER INSTALLATION

1. INSTALL VOLUME AIR FLOW METER

Install the gasket, volume air flow meter, washers, nuts and bolt. Torque the nuts and bolt.

2. INSTALL AIR CLEANER CAP WITH VAF METER

(a) Install the air cleaner cap with VAF meter to the air cleaner case.

(b) Connect the VAF meter connector.

3. INSTALL INTAKE AIR CONNECTOR

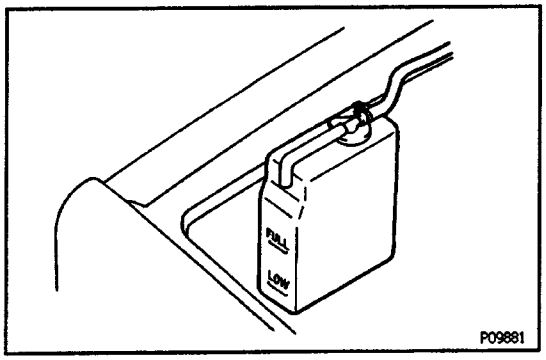

COOLANT CHECK

1. CHECK ENGINE COOLANT LEVEL AT RADIATOR RESERVOIR

The engine coolant level should be between the ”LOW” and ”FULL” lines.

If low, check for leaks and add engine coolant up to the ”FULL” line.

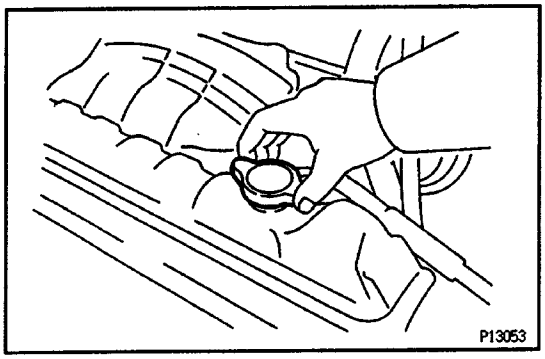

2. CHECK ENGINE COOLANT QUALITY

(a) Remove the radiator cap from the water outlet.

CAUTION: To avoid the danger of being burned, do not remove the radiator cap while the engine and radiator are still hot, a: fluid and steam can be blown out under pressure.

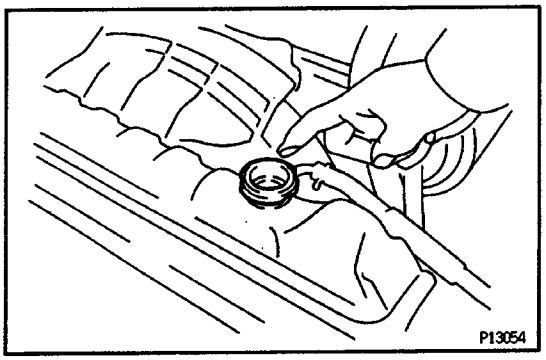

(b) There should not be any excessive deposits of rust or scale around the radiator cap or radiator filler hole, and the coolant should be free from oil.

If excessively dirty, clean the coolant passages and replace the coolant.

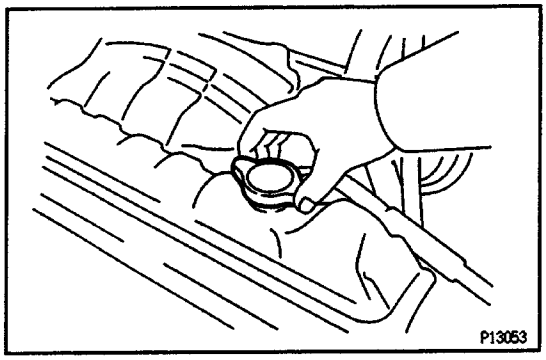

(c) Reinstall the radiator cap.

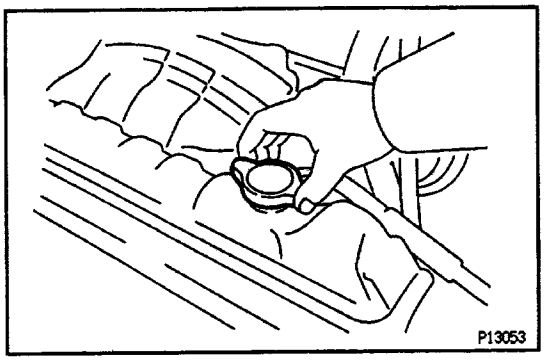

COOLANT REPLACEMENT

1. DRAIN ENGINE COOLANT

(a) Remove the radiator cap.

CAUTION: To avoid the danger of being burned, do not remove the radiator cap while the engine and radiator are still hot, a: fluid and steam can be blown out under

pressure.

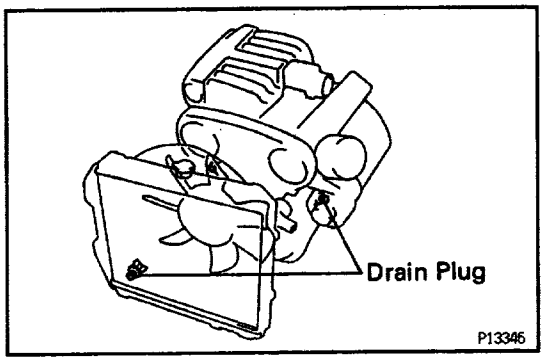

(b) Loosen the drain plugs, and drain the engine coolant.

(c) Close the drain plugs.

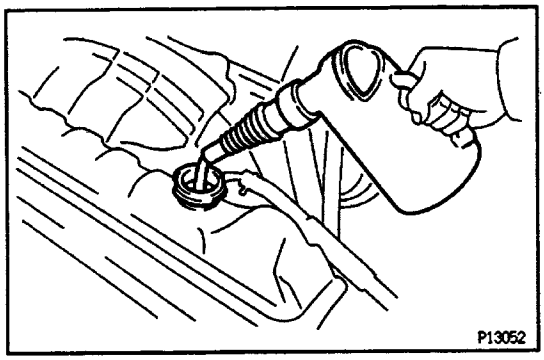

FILL ENGINE COOLANT

(a) Slowly fill the system with engine coolant.

- Use a good brand of ethylene – glycol base engine coolant and mix it according to the manufacturer's directions.
- Using engine coolant which includes more than 50 % ethylene–glycol (but not more than 70 %) is recommended.

NOTICE:

- **Do not use an alcohol type engine coolant.**
- **The engine coolant should be mixed with demineralized water or distilled water.**

Capacity:

M/T

10.0 liters (10.6 US qts, 8.8 Imp. qts)

A/T

9.8 liters (10.4 US qts, 8.6 Imp. qts)

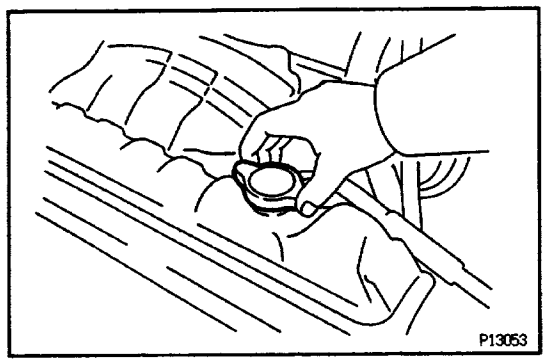

(b) Install the radiator cap.

(c) Start the engine, and bleed the cooling system.

(d) If necessary, refill engine coolant into the reservoir tank until it is "FULL" line.

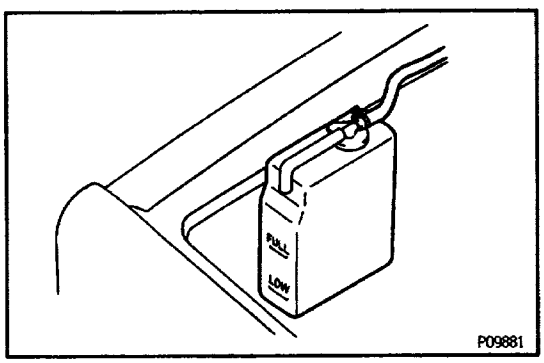

3. CHECK ENGINE COOLANT FOR LEAKS

COOLING SYSTEM

DESCRIPTION

This engine is cooled by a pressurized water forced circulation cooling system equipped with a thermostatically controlled bypass valve mounted on the inlet side.

OPERATION

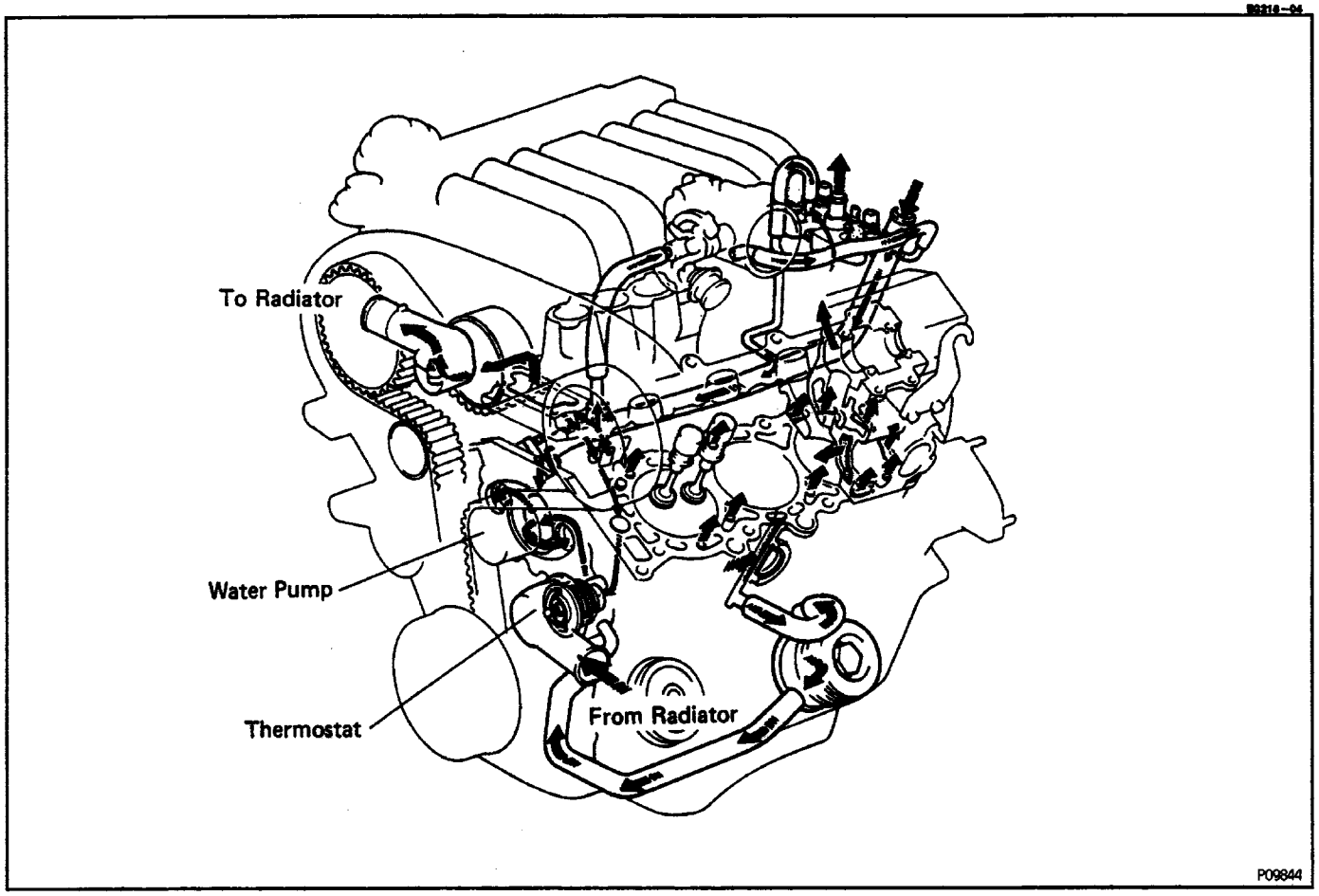

The cooling system is composed of the water jacket (inside the cylinder block and cylinder head), radiator, water pump, thermostat, cooling fan, fluid coupling, hoses and other components.
Engine coolant, which has been heated in the water jacket, is drawn into the radiator by the water pump. The radiator is cooled by air drawn in by the cooling fan and by the air flow from the vehicle's forward motion. This in turn cools the coolant in the radiator. The coolant is then drawn into the water pump and then discharged back to the cylinder block.
The water jacket is a network of channels in the outer area of the cylinder block and cylinder head. It is designed so that the engine coolant flowing through it can provide adequate cooling to the areas subjected to the highest thermal stresses, in particular, the cylinders and combustion chambers, during engine operation.

COOLING SYSTEM

DESCRIPTION

This engine is cooled by a pressurized water forced circulation cooling system equipped with a thermostatically controlled bypass valve mounted on the inlet side.

OPERATION

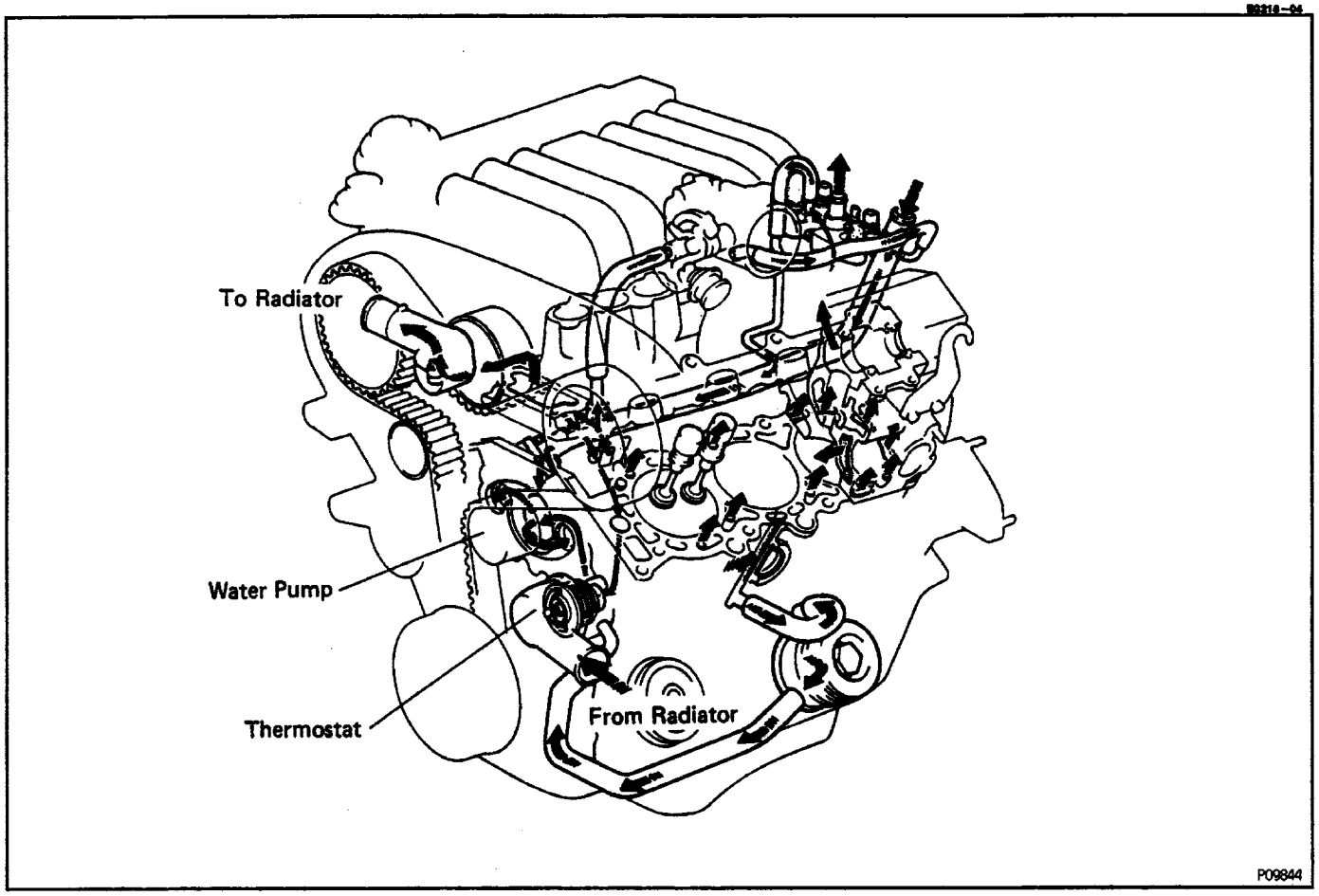

The cooling system is composed of the water jacket (inside the cylinder block and cylinder head), radiator, water pump, thermostat, cooling fan, fluid coupling, hoses and other components.
Engine coolant, which has been heated in the water jacket, is drawn into the radiator by the water pump. The radiator is cooled by air drawn in by the cooling fan and by the air flow from the vehicle's forward motion. This in turn cools the coolant in the radiator. The coolant is then drawn into the water pump and then discharged back to the cylinder block.
The water jacket is a network of channels in the outer area of the cylinder block and cylinder head. It is designed so that the engine coolant flowing through it can provide adequate cooling to the areas subjected to the highest thermal stresses, in particular, the cylinders and combustion chambers, during engine operation.

RADIATOR

The radiator, mounted at the front of vehicle, consists of upper and lower tanks and a core connecting the 2 tanks.

The core contains many tubes through which engine coolant flows from the upper tank to the lower tank. Air passing over the radiator fins cools the heated engine coolant flowing through the radiator.

The upper tank has an inlet for engine coolant from the water jacket and it has a filler inlet. It also has a hose attached through which excess engine coolant or steam can flow. The lower tank has an outlet for the engine coolant and a drain cock. Automatic transmission models include an automatic transmission fluid cooler.

RADIATOR CAP

The radiator cap is a pressure type cap which seals the radiator, resulting in pressurization of the radiator as the coolant expands. The pressurization prevents the engine coolant from boiling even when the engine coolant temperature exceeds 100˚ C (212˚ F).

A relief valve (pressurization valve) and a vacuum valve (negative pressure valve) are built into the radiator cap. The relief valve opens and lets steam escape out of the overflow pipe when the pressure generated in the cooling system exceeds the limit (engine coolant temperature: 110– 120˚C, 230 – 248˚F, pressure: 58.8 – 103.0 kPa, 0.6 – 1.05 kgf/cm2, 8.5 – 14.9 psi). The vacuum valve opens to allow engine coolant to enter in order to alleviate the vacuum which develops in the engine coolant system after the engine has stopped and the engine coolant temperature drops.

RADIATOR RESERVOIR

The radiator reservoir is used to catch engine coolant which overflows the cooling system as a result of volumetric expansion when the engine coolant is heated. When the engine coolant temperature drops, engine coolant in the radiator reservoir returns to the radiator, thus keeping the radiator full at all times and avoiding needless engine coolant loss. To find out if the engine coolant needs to be replenished, check the radiator reservoir level.

WATER PUMP

The water pump is used for forced circulation of engine coolant through the cooling system. It is mounted on the front of the engine block and driven by the timing belt.

THERMOSTAT

The thermostat has a wax type bypass valve and is mounted in the water inlet housing. The thermostat includes a type of automatic valve operated by fluctuations in the engine coolant temperature. When the engine coolant temperature is low, the valve closes to prevent the engine coolant flowing to the radiator, thus permitting the engine to warm up rapidly. When the bypass valve opens the bypass circuit, the engine coolant continues to circulate inside the engine, quickly and uniformly warming up to the operating temperature.

When the engine coolant temperature is high, the valve opens and the engine coolant flows to the radiator where it is cooled. When the wax inside the thermostat is heated, it expands and thus creates pressure which overpowers the force of the spring which keeps the valve closed. When the wax cools, its contraction allows the force of the spring to take effect once more, closing the valve. The thermostat in this engine operates at a temperature of 82˚C (180˚F).

PREPARATION

EQUIPMENT

Heater	
Radiator cap tester	
Thermometer	
Torque wrench	

ENGINE COOLANT

Item	Capacity	Classification
M/T A/T	**10.0 liters (10.6 US qts, 8.8 Imp. qts)** **9.8 liters (10.4 US qts, 8.6 Imp. qts)**	Ethylene–glycol base

SSM (SPECIAL SERVICE MATERIALS)

08826–00100	Seal Packing 1282B, THREE BOND 1282B or equivalent (FIPG)	Water pump

RADIATOR

RADIATOR CLEANING

Using water or a steam cleaner, remove. mud and dirt from the radiator core.

NOTICE: If using a high–pressure type cleaner, be careful not to deform the fins of the radiator core. For example, keep a distance of more than 40 – 50 cm (15.75 – 19.69 in.) between the radiator core and cleaner nozzle when the cleaner nozzle pressure is 2.942 – 3,432 kPa (30 – 35 kgf/cm2, 427 – 498 psi).

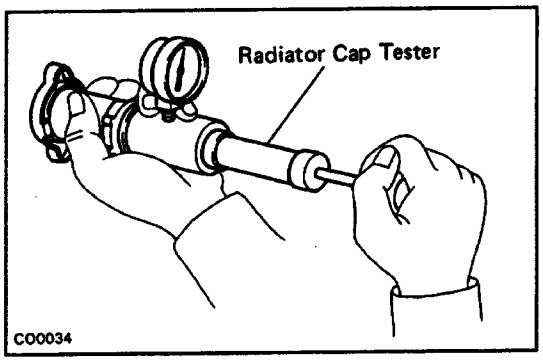

RADIATOR INSPECTION

1. CHECK RADIATOR CAP

(a) Using radiator cap tester, pump the tester until relief valve opens. Check that the valve opens between 74 kPa (0.75 kgf/cm2, 10.7 psi) and 103 kPa (1.05 kgf/cm2, 14.9 psi).

(b) Check that pressure gauge does not drop rapidly when pressure on cap is below 59 kPa (0.6 kgf/cm2, 8.5 psi).

If either check is not within limit, replace the radiator cap.

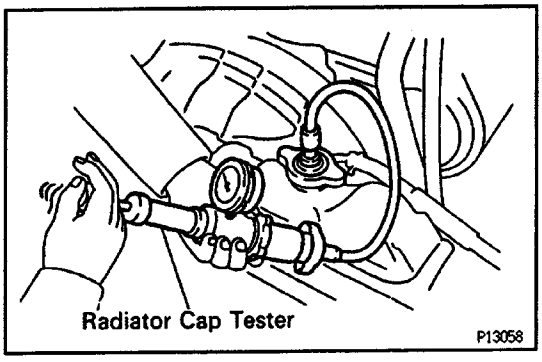

2. CHECK COOLING SYSTEM FOR LEAKS

(a) Fill the radiator with engine coolant and attach a radiator cap tester.

(b) Warm up the engine.

(c) Pump it to 118 kPa (1.2 kgf/cm2, 17.1 psi), and check that the pressure does not drop.

If the pressure drops, check for leaks from the hoses, radiator or water pump. If no external leaks are found, check the heater core, block and intake manifold.

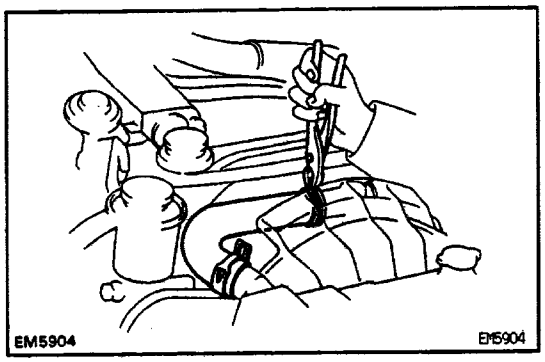

RADIATOR REMOVAL

1. DRAIN ENGINE COOLANT

2. REMOVE ENGINE UNDER COVER

3. REMOVE RADIATOR

(a) Disconnect the reservoir hose.

(b) Remove the radiator hoses.

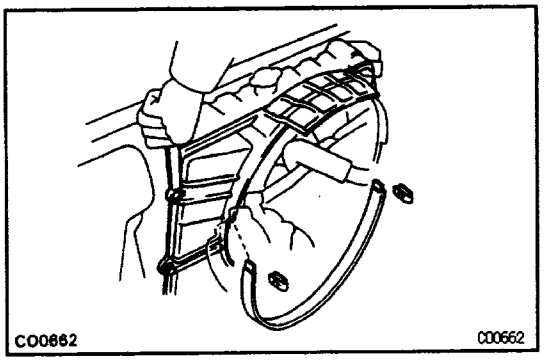

(c) Remove the No.2 fan shroud.

(d) Remove the No.1 fan shroud.

(e) Disconnect the oil cooler hoses.

HINT:

- Be careful as some oil will leak out. Catch it in a suitable container.
- Plug the hose to prevent oil from escaping.

(f) Remove the 4 bolts and radiator.

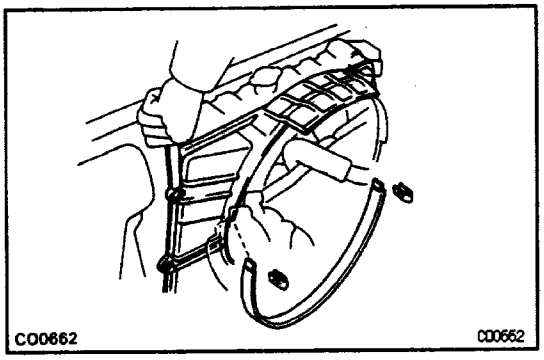

RADIATOR INSTALLATION

1. INSTALL RADIATOR

(a) Install the radiator with the 4 bolts.

(b) Connect the oil cooler hoses.

(c) Install the No.1 fan shroud.

(d) Install the No.2 fan shroud.

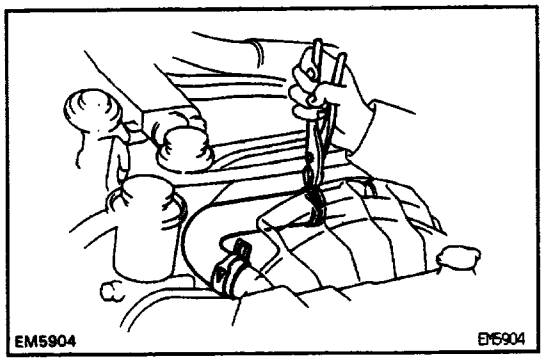

(e) Install the radiator hoses.

(f) Connect the reservoir hoses.

2. INSTALL ENGINE UNDER COVER

3. FILL WITH ENGINE COOLANT

4. START ENGINE AND CHECK FOR LEAKS

SERVICE SPECIFICATIONS

SERVICE DATA

Thermostat	Valve opening pressure		80 – 84°C (176 – 183°F)
	Valve lift	at 95°C (203°F)	8 mm (0.31 in.) or more
Radiator cap	Relief valve opening pressure	STD	74 – 103 kPa (0.75 – 1.05 kgf/cm², 10.7– 14.9 psi)
	Relief valve opening pressure	Minimum	59 kPa (0.6 kgf/cm², 8.8 psi)

TORQUE SPECIFICATIONS

Part tightened	N·m	kgf·cm	ft·lbf
Water pump x Cylinder block – Long bolt	18	185	13
Water pump x Cylinder block – Short bolt	20	200	14
Water inlet x Water pump	20	200	14

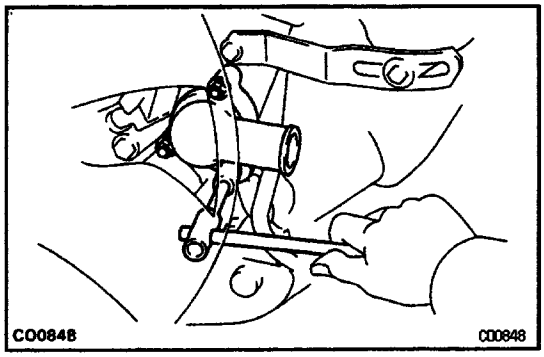

THERMOSTAT

THERMOSTAT REMOVAL

1. DRAIN ENGINE COOLANT

2. DISCONNECT RADIATOR OUTLET HOSE

3. REMOVE THERMOSTAT

(a) Remove the 3 nuts, water inlet and thermostat with gasket from the water pump.

(b) Remove the gasket from the thermostat.

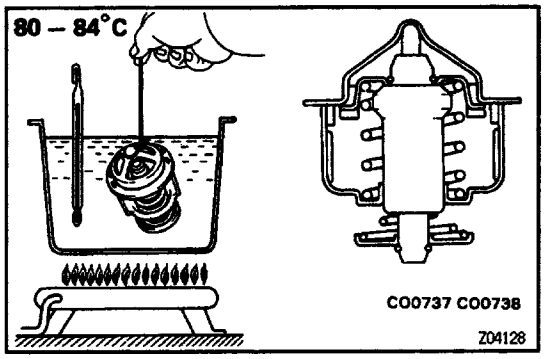

THERMOSTAT INSPECTION

HINT: Thermostat is numbered according to the valve opening temperature.

(a) Immerse the thermostat in water and heat the water gradually.

(b) Check the valve opening temperature and valve lift.

Valve opening temperature:

80 – 84°C (176 – 183°F)

Valve lift:

At 95°C (203 °F): 8 mm (0.31 in.) or more

If the valve opening temperature and valve lift are not within specifications, replace the thermostat.

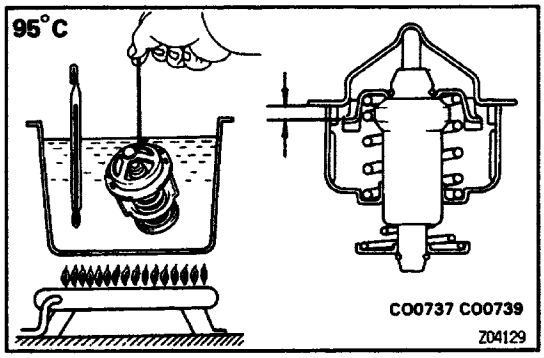

(c) Check that the valve spring is tight when the thermostat is fully closed.

If not tight, replace the thermostat.

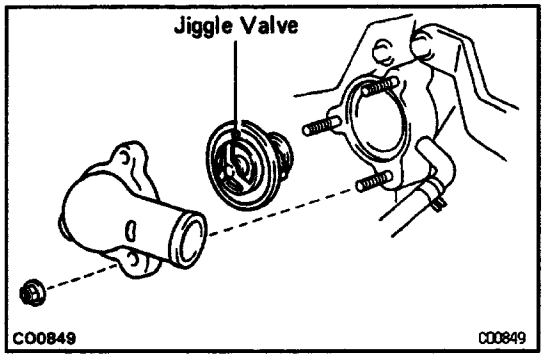

THERMOSTAT INSTALLATION

1. INSTALL THERMOSTAT

(a) Place a new gasket to the thermostat.

(b) Install the thermostat with the jiggle valve upward.

2. INSTALL WATER INLET

Install the water inlet with the 3 nuts.

Torque: 20 N–m (200 kgf–cm, 14 ft–lbf)

3. CONNECT RADIATOR OUTLET HOSE .

4. FILL WITH ENGINE COOLANT

5. START ENGINE AND CHECK FOR LEAKS

WATER PUMP

COMPONENTS

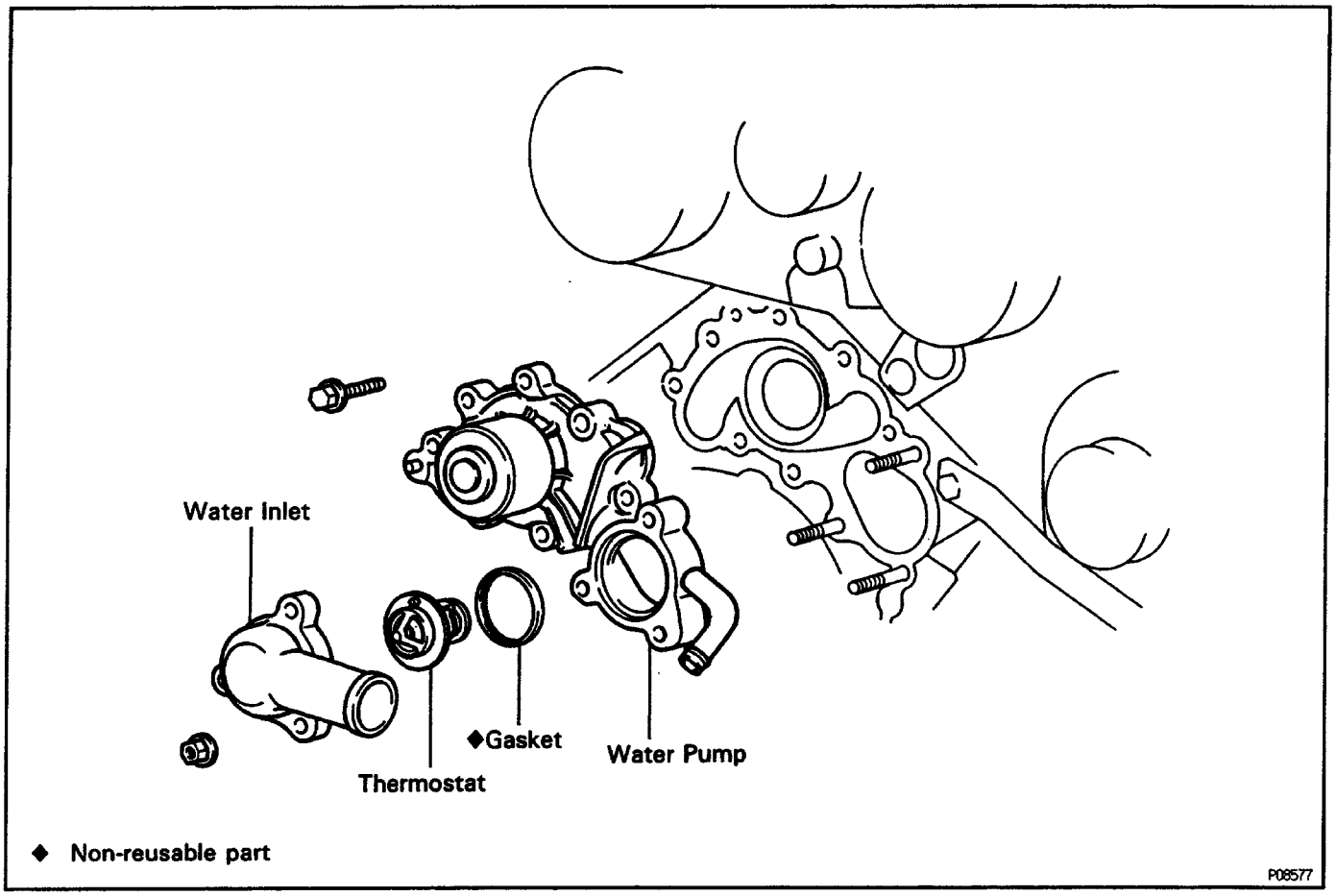

WATER PUMP REMOVAL

1. REMOVE TIMING BELT

(See timing belt removal in timing belt in Engine Mechanical)

2. REMOVE THERMOSTAT

3. DISCONNECT NO.2 OIL COOLER HOSE FROM WATER PUMP

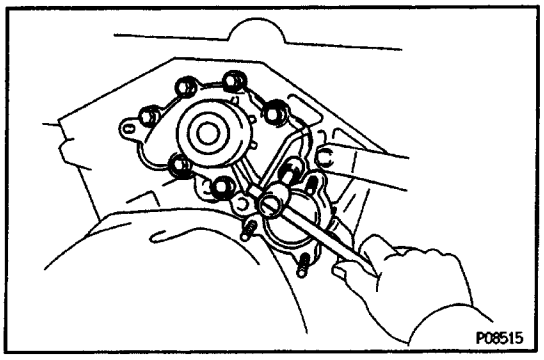

4. REMOVE WATER PUMP

Remove the 7 bolts and water pump.

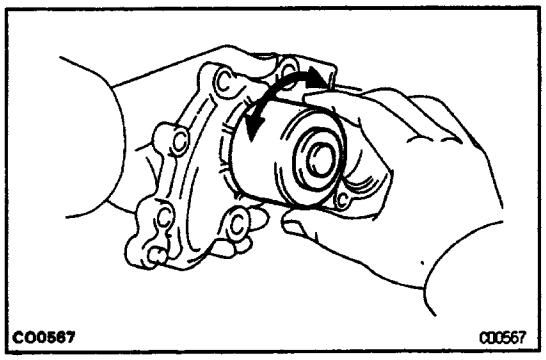

WATER PUMP INSPECTION

1. INSPECT WATER PUMP BEARING

Check that the water pump bearing moves smoothly and quietly.

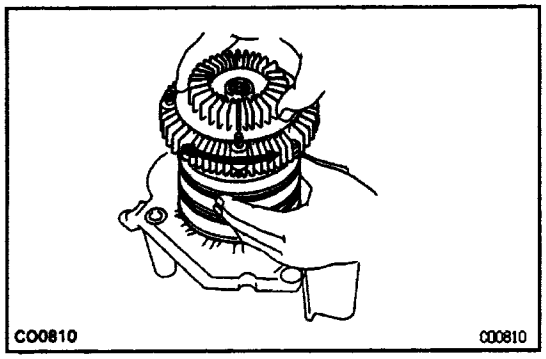

t. INSPECT FLUID COUPLING

Check the fluid coupling for damage and silicone oil leakage.

3. INSPECT FAN PULLEY BRACKET

Check the turning smoothness of the fan pulley.
If necessary, replace the pulley bracket.

WATER PUMP INSTALLATION

(See components for Removal and Installation)

1. INSTALL WATER PUMP

(a) Remove any old packing (FIPG) material and be careful not to drop any oil on the contact surfaces of the water pump and cylinder block.

Using a razor blade and gasket scraper, remove all the old packing (FIPG) material from the gasket surfaces and sealing groove.

Thoroughly clean all components to remove all the loose material.

Using a non–residue solvent, clean both sealing surfaces.

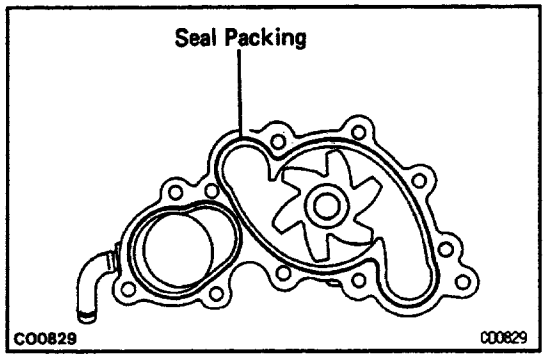

(b) Apply seal packing to the water pump groove.

Seal packing:

Part No. 08826–00100 or equivalent

- Install a nozzle that has been cut to a 2 – 3 mm (0.08 – 0.12 in.) opening.

HINT: Avoid applying an excessive amount to the surface.

Parts must be assembled within 5 minutes of application. Otherwise the material must be removed and reapplied.

Immediately remove nozzle from the tube and reinstall cap.

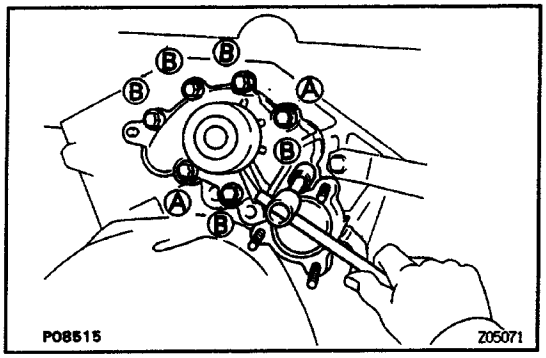

(c) Install the water pump with the 7 bolts.

Torque:

Bolt (A) 18 N–m (185 kgf–cm. 13 ft–lbf)

Bolt (B): 20 N–m (200 kgf–cm, 14 ft–lbf)

2. CONNECT NO.2 OIL COOLER HOSE

3. INSTALL THERMOSTAT

4. INSTALL TIMING BELT

(See timing belt installation in timing belt in Engine Mechanical)

EVAPORATIVE EMISSION (EVAP) CONTROL SYSTEM

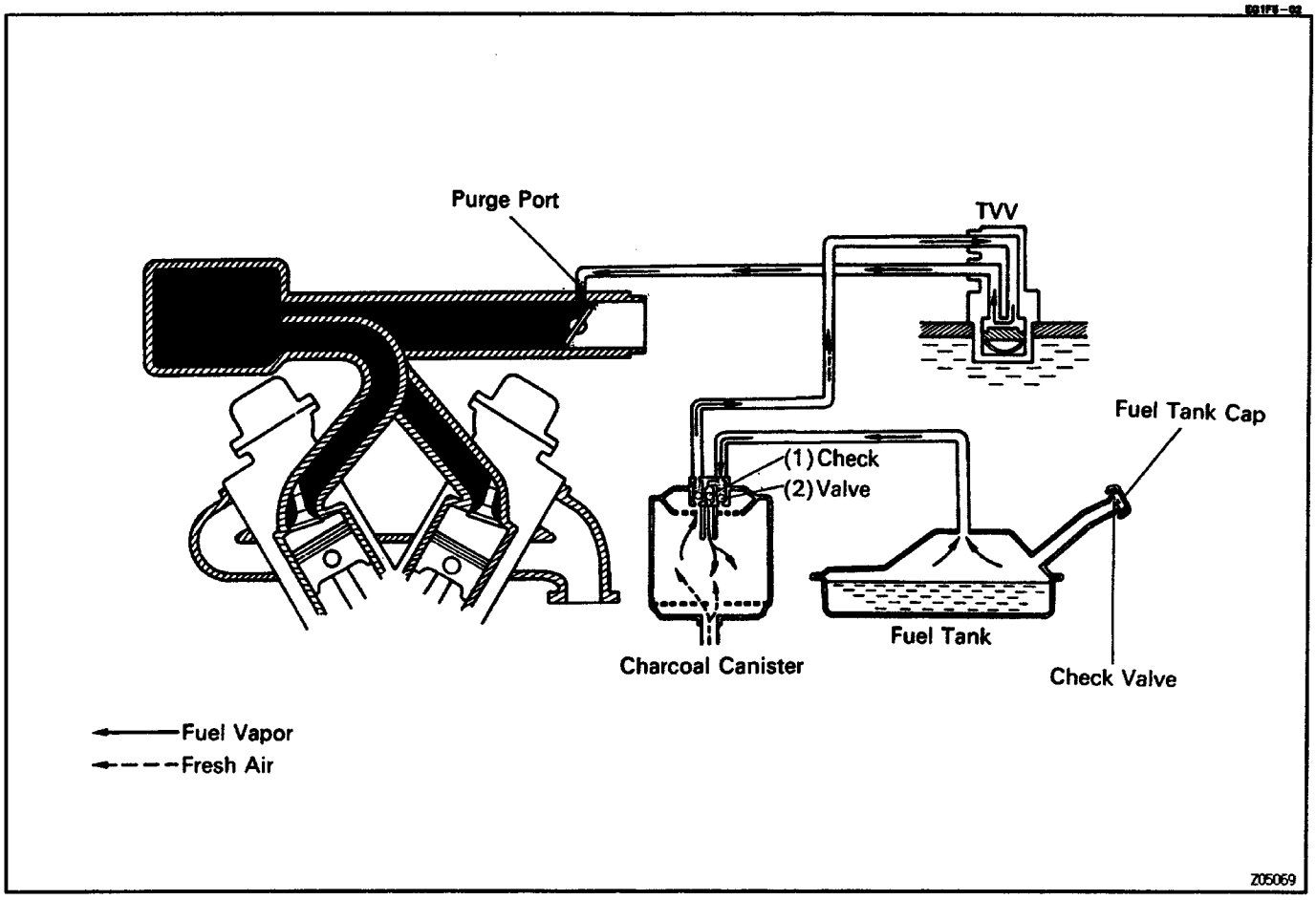

To reduce HC emission, evaporated fuel from the fuel tank is routed through the charcoal canister to the intake manifold for combustion in the cylinders.

Engine Coolant Temp.	TVV	Throttle Valve Opening	Check Valve is Charcoal Canister			Check Valve in Cap	Evaporated Fuel (HC)
			(1)	(2)	(3)		
Below 35°C (95°F)	CLOSED	–	–	–	–	–	HC from tank is absorbed in the canister.
Above 54°C (129°F)	OPEN	Positioned below purge port	CLOSED	–	–	–	
		Positioned above purge port	OPEN	–	–	–	HC from canister is led into air intake manifold.
High pressure in tank	–	–	–	OPEN	CLOSED	CLOSED	HC from tank is absorbed in the canister.
High vacuum in tank	–	–	–	CLOSED	OPEN	OPEN	(Air is led into the fuel tank.)

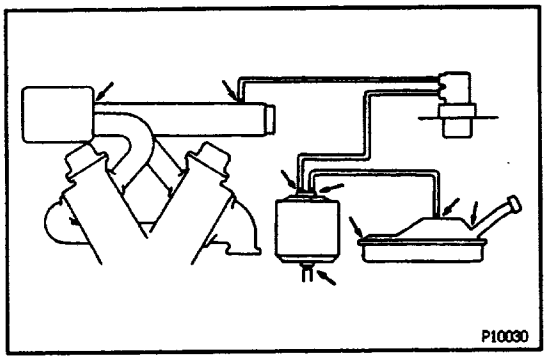

FUEL VAPOR LINES, FUEL TANK AND TANK CAP INSPECTION

1. VISUALLY INSPECT LINES AND CONNECTIONS

Look for loose connections, sharp bends or damage.

2. VISUALLY INSPECT FUEL TANK

Look for deformation, cracks or fuel leakage.

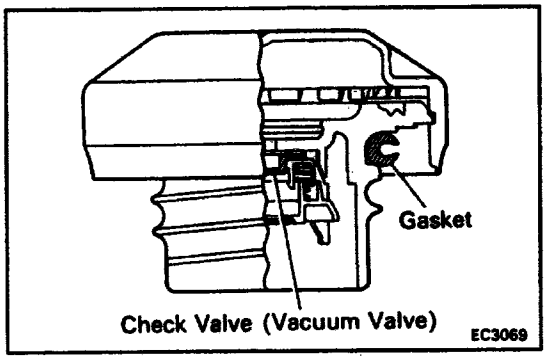

3. VISUALLY INSPECT FUEL TANK CAP

Look for a damaged or deformed gasket and cap.

1f necessary, repair or replace the cap.

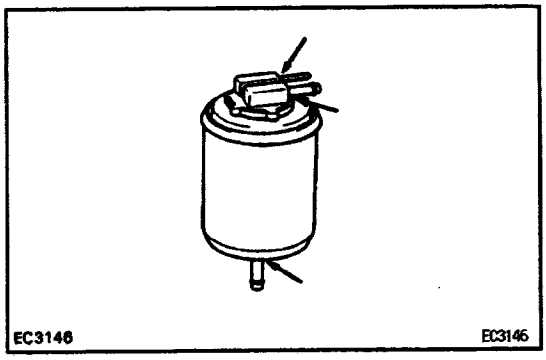

CHARCOAL CANISTER INSPECTION

1. REMOVE CHARCOAL CANISTER

2. VISUALLY INSPECT CHARCOAL CANISTER CASE

Look for cracks or damage.

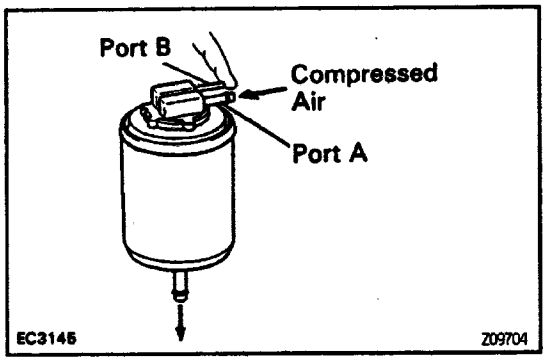

3. CHECK FOR CLOGGED FILTER AND STUCK CHECK VALVE

(a) Using low pressure compressed air 4.71 kPa (48 gf/cm^2, 0.68 psi), blow into port A and check that air flows without resistance from the other ports.

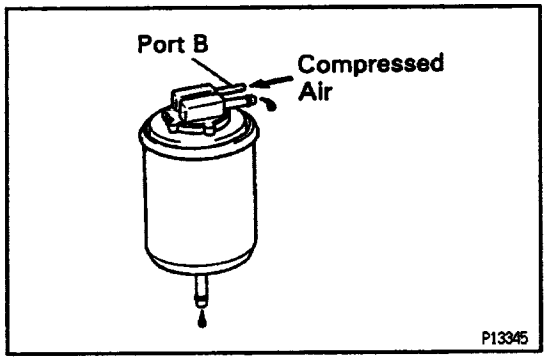

(b) Blow low pressure compressed air 4.71 kPa (48 gf/cm^2, 0.68 psi) into port B and check that air does not flow from the other ports.

If a problem is found, replace the charcoal canister.

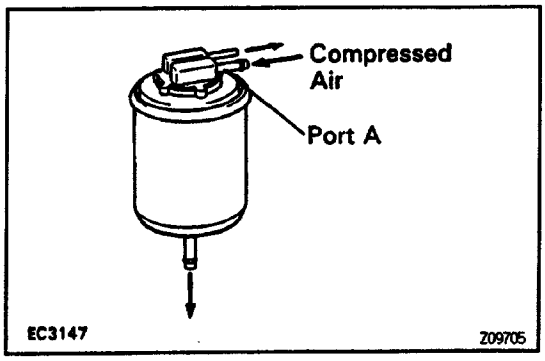

4. CLEAN FILTER IN CANISTER

Clean the filter by blowing 294 kPa (3 kgf/cm2, 43 psi) of compressed air into port A while holding port B closed.

NOTICE:

- **Do not attempt to wash the canister.**
- **No activated carbon should come out.**

5. INSTALL CHARCOAL CANISTER

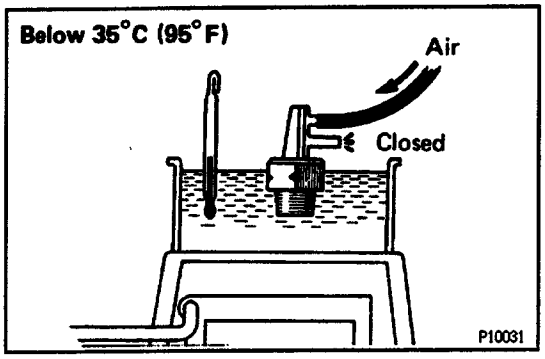

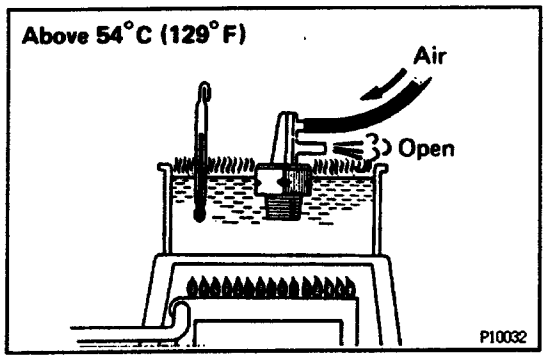

TVV INSPECTION

CHECK TVV BY BLOWING AIR INTO PIPE

(a) Drain the coolant from the radiator into a suitable container.
(b) Remove the TVV from the intake manifold.
(c) Cool the TVV to below 35˚C (95˚F) with coot water.
(d) Blow air into a pipe and check that the TVV is closed.
(e) Heat the TVV to above 54˚C (129˚F) with hot water.
(f) Blow air into a pipe and check that the TVV is open.
If a problem is found, replace the TVV.
(g) Apply adhesive to 2 or 3 threads of the TVV, and reinstall it.

Adhesive:

Part No. 08833–00070, THREE BOND 1324 or equivalent

Torque: 25 N–m (250 kgf–cm. 18 ft–lbf)

(h) Fill the radiator with engine coolant.

EXHAUST GAS RECIRCULATION (EGR) SYSTEM

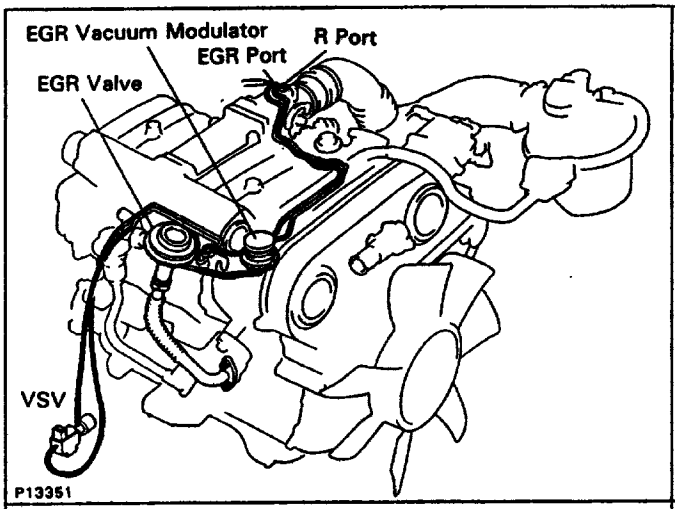

(1)

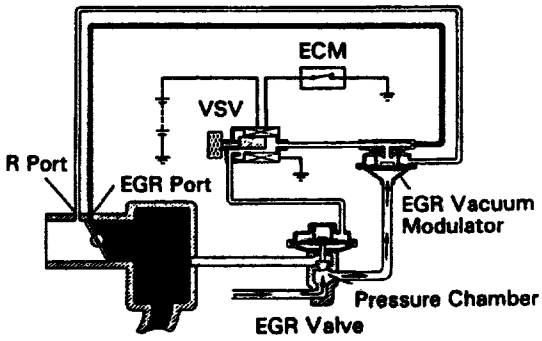

(2)

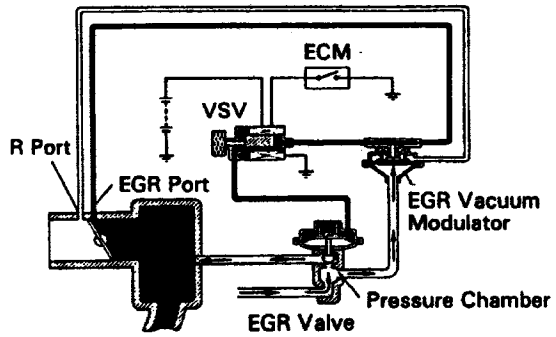

(3)

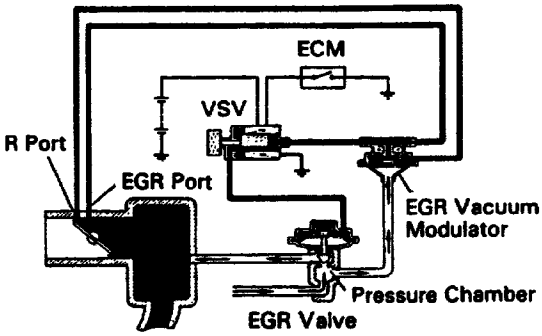

To reduce NOx emissions, part of the exhaust gases are recirculated through the EGR valve to the intake manifold to lower the maximum combustion temperature.

Engine Coolant Temp.	VSV	Throttle Valve Opening Angle	Pressure in the EGR Valve Pressure Chamber		EGR Vacuum Modulator	EGR Valve	Exhaust Gas
Below 48°C (118°F)	CLOSED	–	–		–	CLOSED	Not recirculated
Above 52°C (126°F)	OPEN	Positioned below EGR port	–		–	CLOSED	Not recirculated
		Positioned between EGR port and R port	(1) LOW	*Pressure constantly alternating between low and high	OPENS passage to atmosphere	CLOSED	Not recirculated
			(2) HIGH		CLOSED passage to atmosphere	OPEN	Recirculated
		Positioned above R port	(3) HIGH	**	CLOSES passage to atmosphere	OPEN	Recirculated (Increase)

Remarks: *Pressure increases → Modulator closes → EGR valve opens → Pressure drops
↑ EGR Valve closes ← Modulator opens ←

**When the throttle valve is positioned above the R port, the EGR vacuum modulator will close the atmosphere passage and open the EGR valve to increase the EGR gas, even if the exhaust pressure is insufficientaly low.

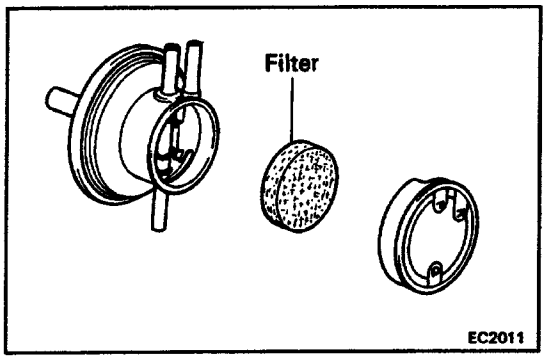

EGR SYSTEM INSPECTION

1. CHECK AND CLEAN FILTER IN EGR VACUUM MODULATOR

(a) Check the filter for contamination or damage.
(b) Using compressed air, clean the filter.

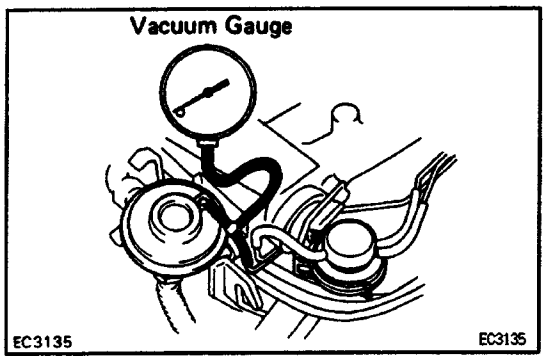

2. PREPARATION

Disconnect the vacuum hose from the EGR valve and using a three –way union, connect a vacuum gauge to it.

3. CHECK SEATING OF EGR VALVE

Start the engine and check that the engine starts and runs at idle.

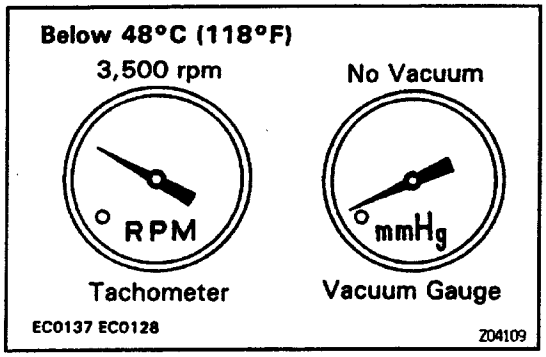

4. CHECK VSV WITH COLD ENGINE

(a) The engine coolant temperature should be below 48˚C (118˚F).
(b) Check that the vacuum gauge indicates zero at 3,500 rpm.

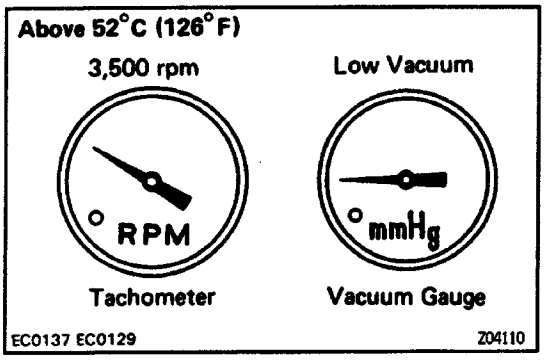

5. CHECK VSV AND EGR VACUUM MODULATOR WITH WARM ENGINE

(a) Warm up the engine.
(b) Check that the vacuum gauge indicates zero at idle.
(c) Check that the vacuum gauge indicates low vacuum at 3,500 rpm.

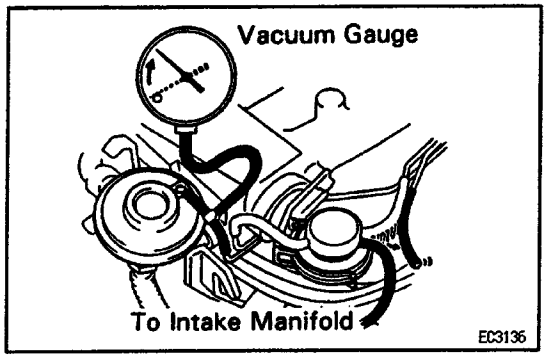

(d) Disconnect the vacuum hose from R port of the EGR vacuum modulator and connect R port directly to the intake manifold with another hose.
(e) Check that the vacuum gauge indicates high vacuum at 3,500 rpm.

HINT: As exhaust gas is increasingly recirculated, the engine will start to misfire.

(f) Disconnect the vacuum gauge and reconnect the vacuum hoses to the proper locations.

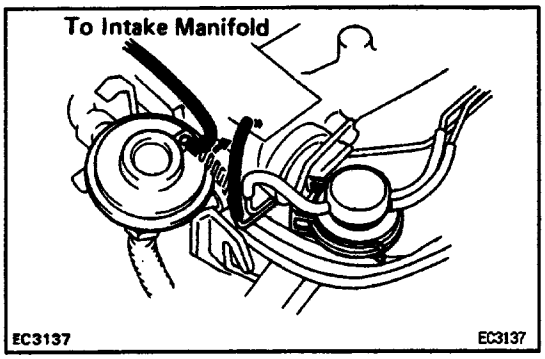

6. CHECK EGR VALVE

(a) Apply vacuum directly to the EGR valve with the engine idling.

(b) Check that the engine runs rough or dies.

(c) Reconnect the vacuum hoses to the proper locations.

If no problem is found with this inspection, the system is okay; otherwise inspect each part.

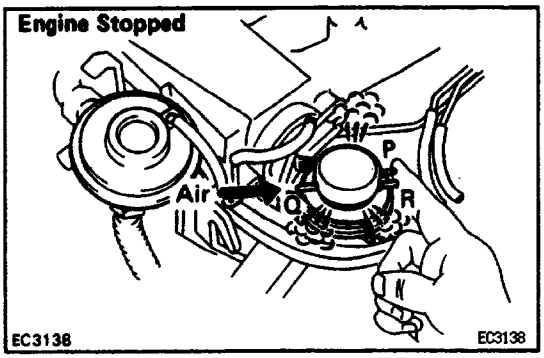

EGR VACUUM MODULATOR INSPECTION

CHECK EGR VACUUM MODULATOR OPERATION

(a) Disconnect the vacuum hoses from ports P, Q and R of the EGR vacuum modulator.

(b) Plug ports P and R with your finger.

(c) Blow air into port Q. Check that air passes through to the air filter side freely.

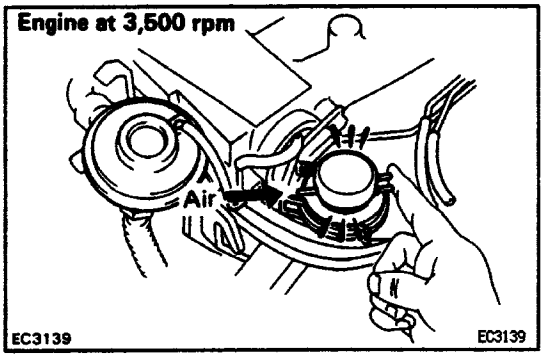

(d) Start the engine and maintain speed at 3.500rpm.

(e) Repeat the above test. Check that there is a strong resistance to air flow.

(f) Reconnect the vacuum hoses to the proper locations.

If a problem is found, replace the EGR vacuum modulator.

EGR VALVE INSPECTION

1. REMOVE EGR VALVE

Check the valve for sticking and heavy carbon deposits.

If a problem is found, replace it.

2. INSTALL EGR VALVE WITH NEW GASKET

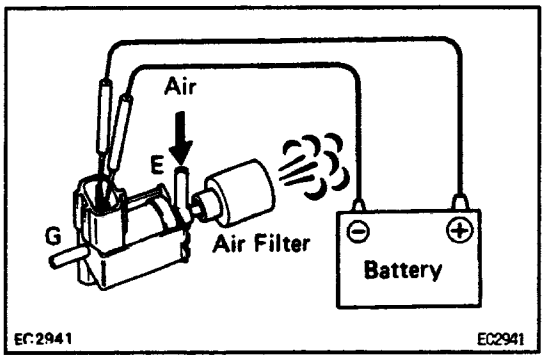

VSV INSPECTION

1. CHECK VACUUM CIRCUIT CONTINUITY IN VSV BY BLOWING AIR INTO PIPE

(a) Connect the VSV terminals to the battery terminals as illustrated.

(b) Blow air into pipe E and check that air comes out of air filter.

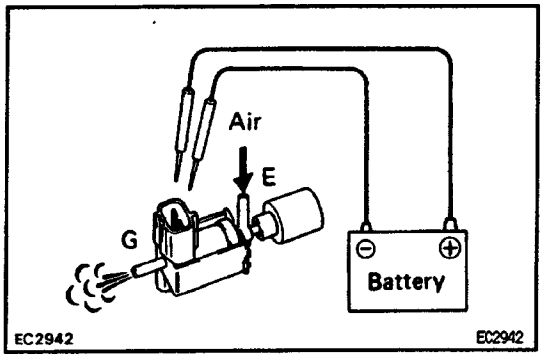

(c) Disconnect the battery from the VSV.
(d) Blow air into pipe E and check that air comes out of pipe G.
If a problem is found, replace the VSV.

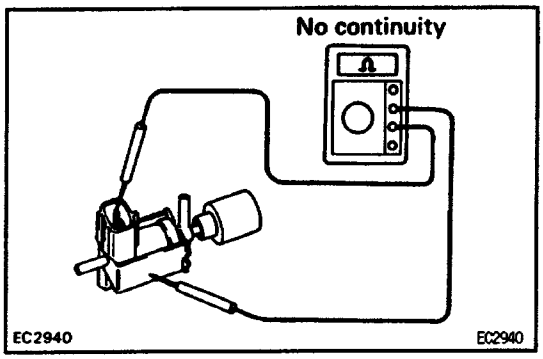

2. CHECK FOR SHORT CIRCUIT

Using an ohmmeter, check that there is no continuity between the terminals and the VSV body.
If there is continuity, replace the VSV.

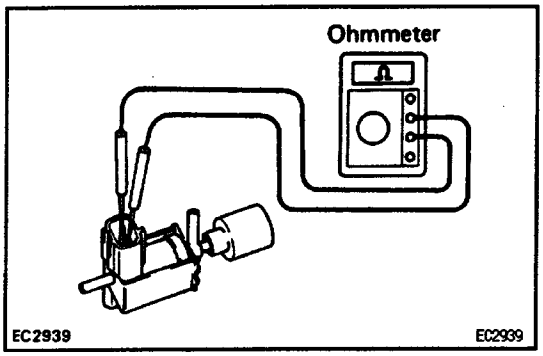

3. CHECK FOR OPEN CIRCUIT

Using an ohmmeter, measure the resistance between the terminals.
Specified resistance:
At 20° C (68° F): 30 – 50Ω
If the resistance is not within specification, replace the VSV.

ENGINE COOLANT TEMPERATURE SENSOR INSPECTION

(See engine coolant temperature sensor in MFI System)

LAYOUT AND SCHEMATIC DRAWING

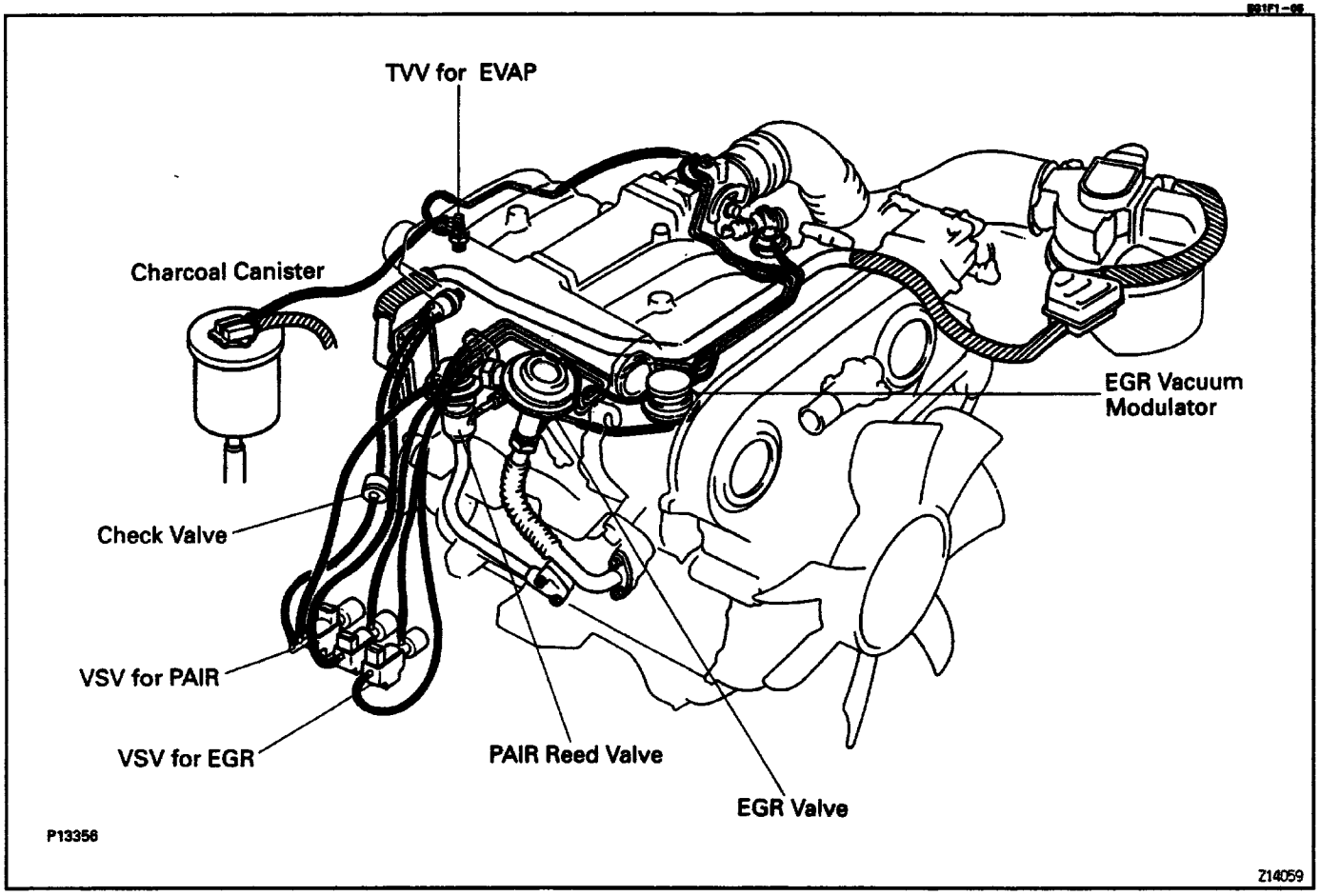

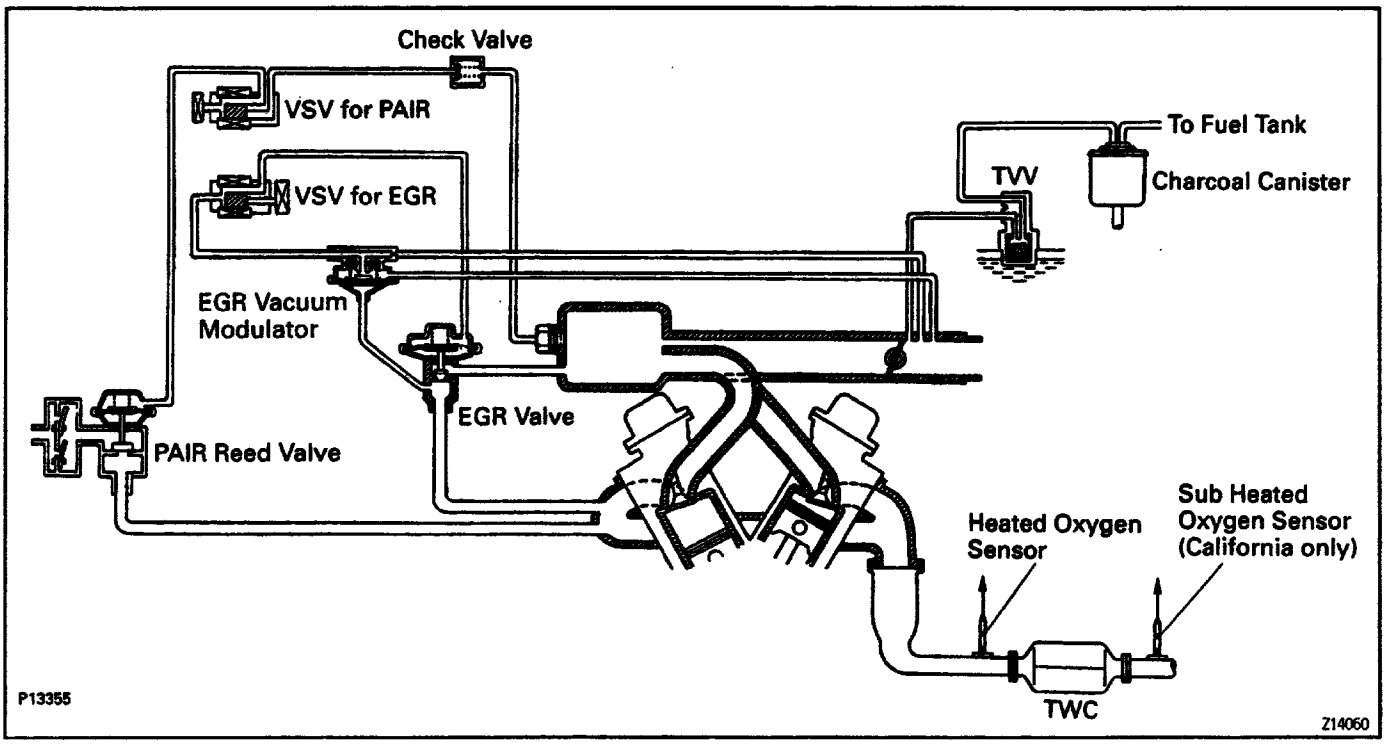

POSITIVE CRANKCASE VENTILATION (PCV) SYSTEM

DESCRIPTION

To reduce HC emission, crankcase blow–by gas is routed through the PCV valve to the air intake manifold for combustion in the cylinders.

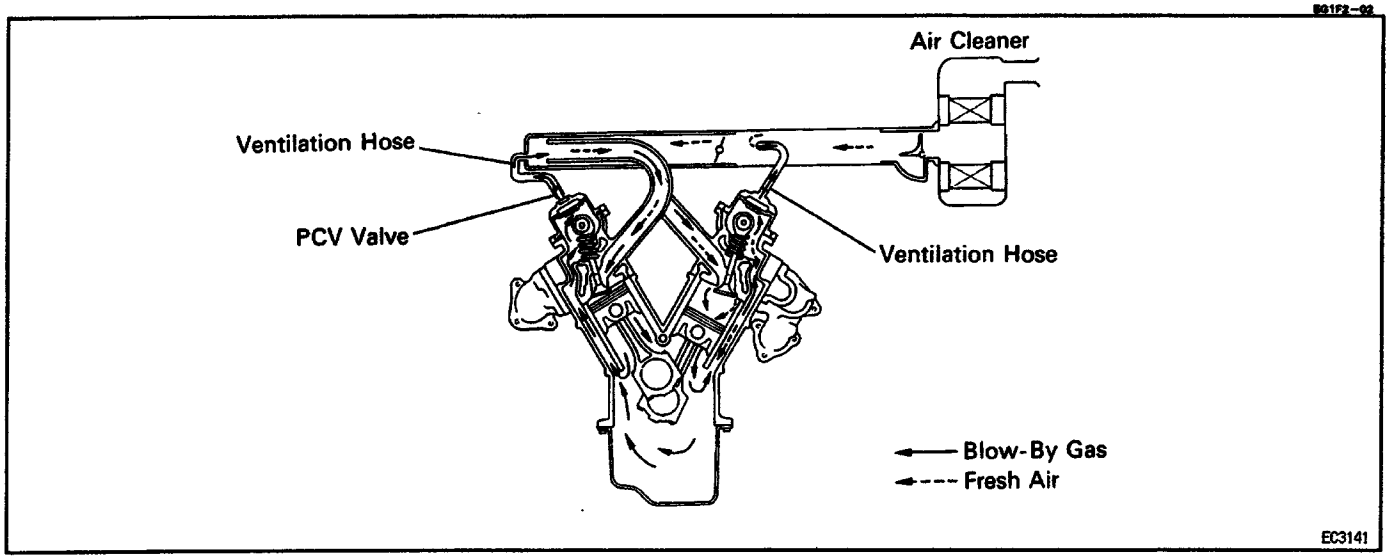

Engine not Running or if Backfiring Intake Manifold Side

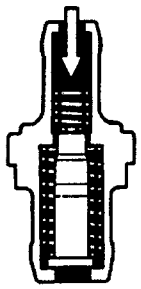

0 PCV VALVE IS CLOSED.

Cylinder Head Side

P06707

Normal Operation

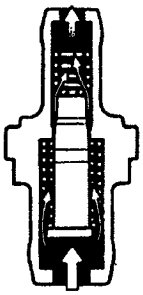

O PCV VALVE IS OPEN.
O VACUUM PASSAGE IS LARGE.

P06708

Idling or Decelerating

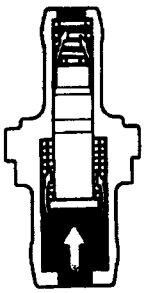

O PCV VALVE IS OPEN.
O VACUUM PASSAGE IS SMALL.

P06709

Acceleration or High Load

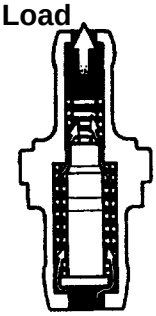

O PCV VALVE IS FULLY OPEN.

P06710

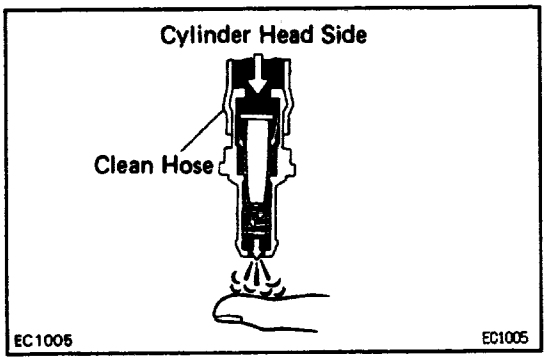

PCV VALVE INSPECTION

1. REMOVE PCV VALVE

2. ATTACH CLEAN HOSE TO PCV VALVE

3. BLOW AIR FROM CYLINDER HEAD SIDE

Check that air passes through easily.

NOTICE: Do not suck air through the valve.
Petroleum substances inside the valve are harmful.

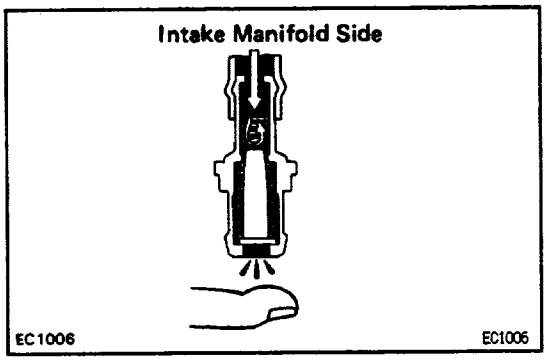

4. BLOW AIR FROM INTAKE MANIFOLD SIDE

Check that air passes through with difficulty.

If the PCV valve fails either check or replace it.

5. REINSTALL PCV VALVE

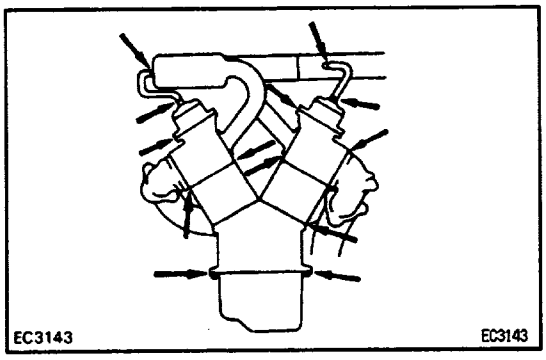

PCV HOSES AND CONNECTIONS INSPECTION

VISUALLY INSPECT HOSES, CONNECTIONS AND GASKETS

Check for cracks, leaks or damage.

EMISSION CONTROL SYSTEMS

SYSTEM PURPOSE

The emission control systems are installed to reduce the amount of CO, HC and NOx exhausted from the engine ((3), (4), (5) and (6)), to prevent the atmospheric release of blow–by gas containing HC (1) and evaporated fuel containing HC being released from the fuel tank (2).
The function of each system is shown in the following table.

System	Abbreviation	Function
(1) Positive Crankcase Ventilation	PCV	Reduces crank case blow–by gas
(2) Evaporative Emission Control .	EVAP	Reduces evaporated HC
(3) Exhaust Gas Recirculation	EGR	Reduces NOx
(4) Pulsed secondary air injection	PAIR	Reduces CO and HC
(5) Three – Way Catalytic Converter	TWC	Reduces CO, HC and NOx
(6) Multiport Fuel Injection ’	MFI	Injects a precisely timed, optimum amount of fuel for reduced exhaust emissions

Remark: ’ For inspection and repair of the MFI system, refer to the MFI section this manual.

PREPARATION

RECOMMENDED TOOLS

	**09082–00050** TOYOTA Electrical Tester Set.	
	**09258–00030** Hose Plug Set .	

EQUIPMENT

Torque wrench	
Vacuum gauge	

SSM (SPECIAL SERVICE MATERIALS)

	08833–00070 Adhesive 1324, THREE BOND 1324 or equivalent	**TVV**

PULSED SECONDARY AIR INJECTION (PAIR) SYSTEM

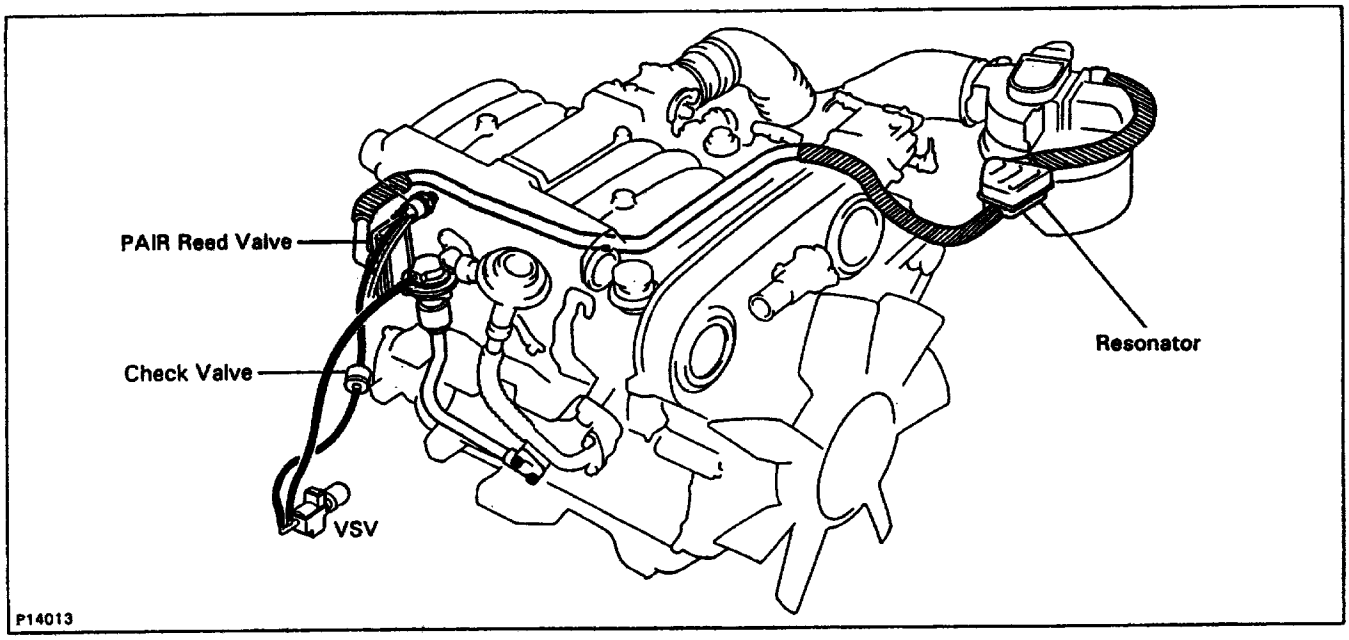

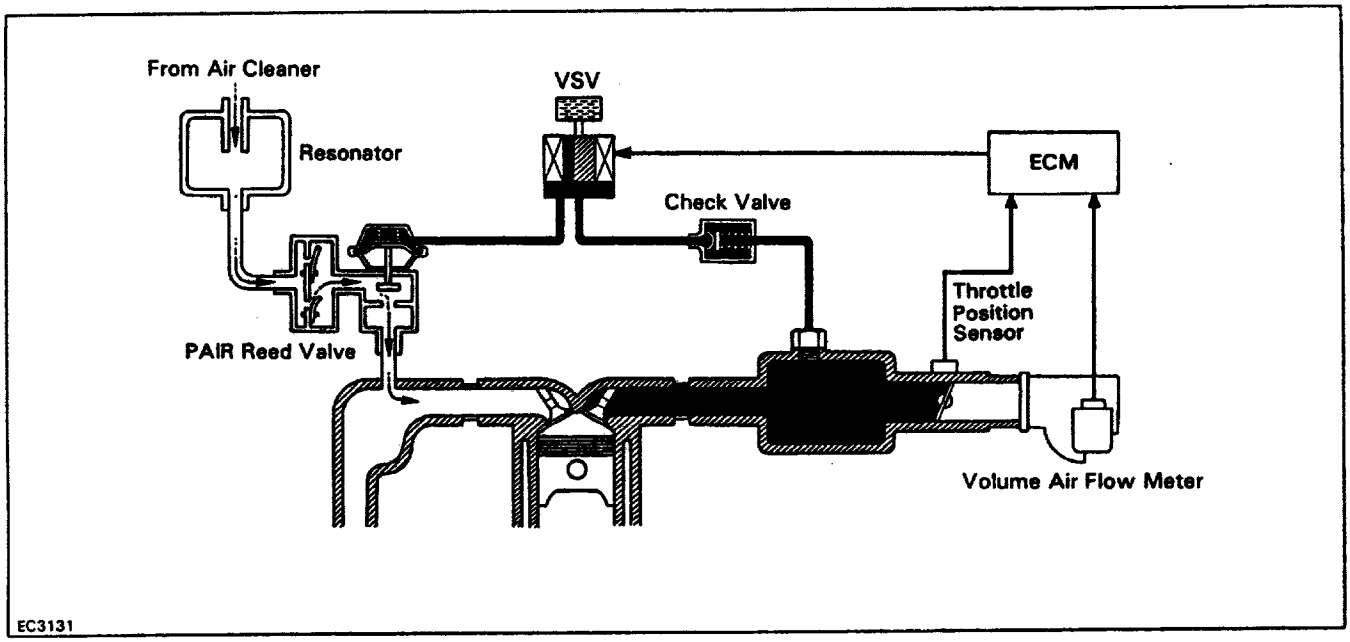

To reduce HC and CO emissions, this system draws in air into exhaust ports to accelerate oxidation, using vacuum generated by the exhaust pulsation in the exhaust manifold.

Condition	Engine Coolant Temp.	Throttle Valve Position	Engine RPM	VSV	PAIR
Normal driving	Below 25°C (77°F)	–	–	ON	ON
Deceleration	Above 35°C (95°F)	Idling	Below 1,000 rpm	OFF	OFF
			Between 1,200 – 3,200 rpm	ON	ON

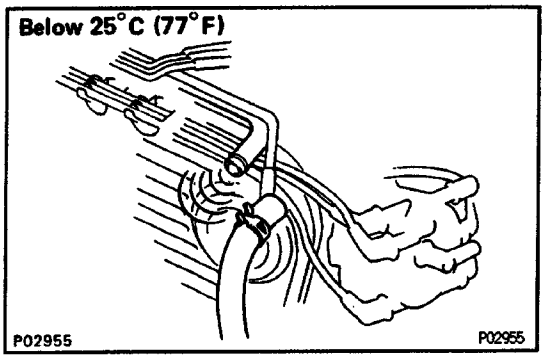

PAIR SYSTEM INSPECTION

1. VISUALLY CHECK HOSES AND TUBES FOR CRACKS, KINKS, DAMAGE OR LOOSE CONNECTIONS

2. CHECK PAIR SYSTEM WITH COLD ENGINE

(a) The engine coolant temperature should be below 25°C, (77°F).

(b) Disconnect the No.2 air hose from the air pipe.

(c) Check that a bubbling noise is heard from the air pipe at idle.

3. CHECK PAIR SYSTEM WITH WARM ENGINE

(a) Warm up the engine.

(b) With the engine idling, check that a bubbling noise is not heard from the air pipe.

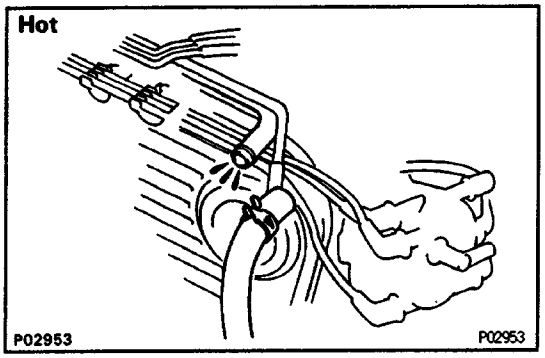

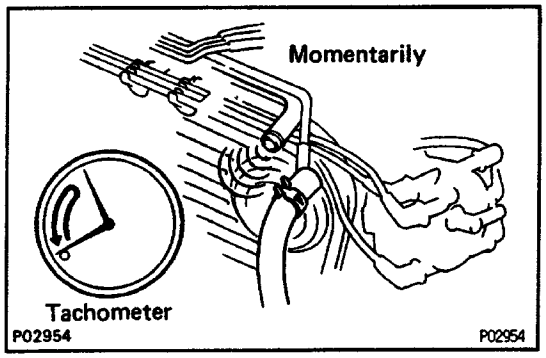

(c) Race the engine above 2,000 rpm and quickly close the throttle valve. Check that the bubbling noise stops momentarily.

PAIR REED VALVE INSPECTION

CHECK REED VALVE BY BLOWING AIR INTO PIPE

(a) Apply vacuum to the reed valve diaphragm.

(b) Blow air into the pipe, as shown, and check that the reed valve is open.

(c) Release the vacuum and check that the reed valve is closed.

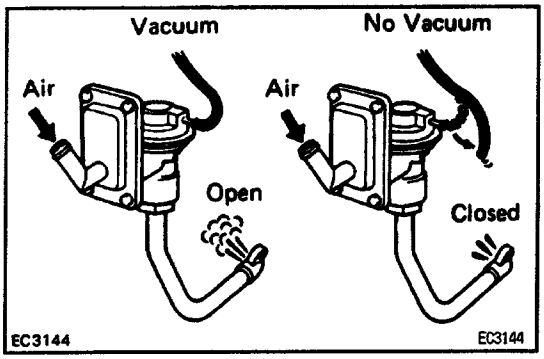

VSV INSPECTION

1. CHECK VACUUM CIRCUIT CONTINUITY IN VSV BY BLOWING AIR INTO PIPE

(a) Connect the VSV terminals to the battery terminals as illustrated.

(b) Blow air into pipe E and check that air comes out of pipe F.

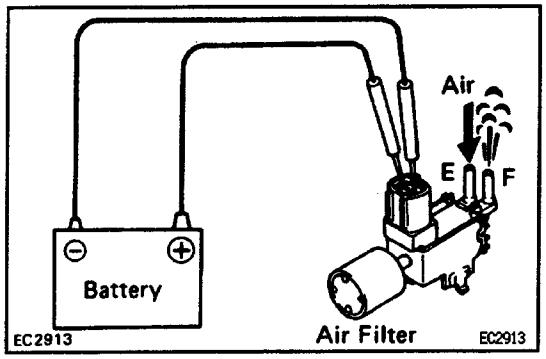

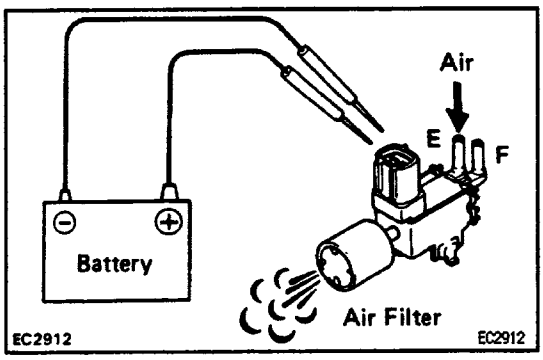

(c) Disconnect the battery from the VSV.
(d) Blow air into pipe E and check that air comes out of air filter.
If a problem is found, replace the VSV.

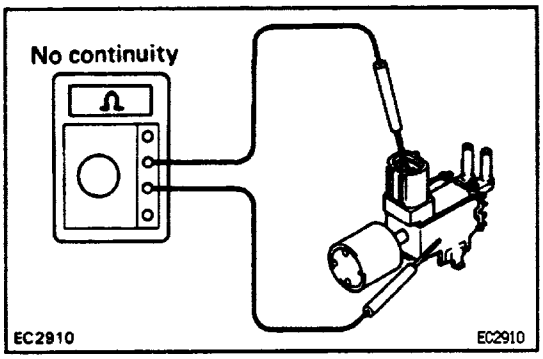

2. CHECK FOR SHORT CIRCUIT

Using an ohmmeter, check that there is no continuity between the terminals and the VSV body.
If there is continuity, replace the VSV.

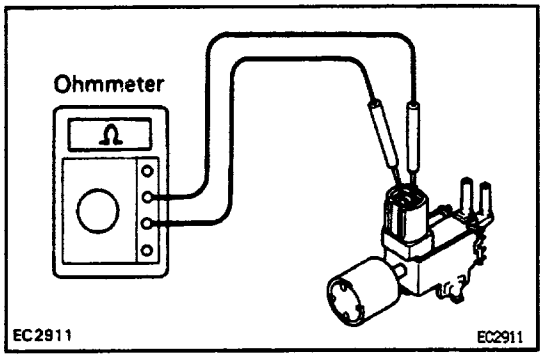

3. CHECK FOR OPEN CIRCUIT

Using an ohmmeter, measure the resistance between the terminals.

Specified resistance:

At 20° C (68° F): 30 – 50Ω

If the resistance is not within specification, replace the VSV.

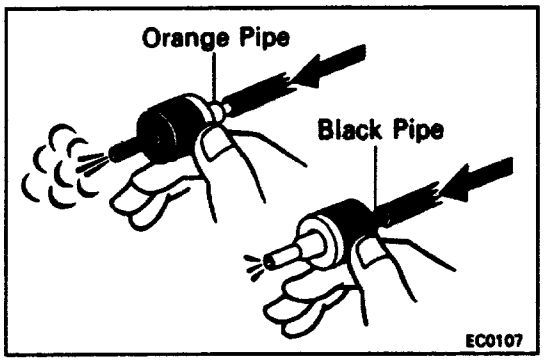

CHECK VALVE INSPECTION

CHECK VALVE BY BLOWING AIR INTO EACH PIPE

(a) Check that air flows from the orange pipe to the black pipe.–
(b) Check that air does not flow from the black pipe to the orange pipe.

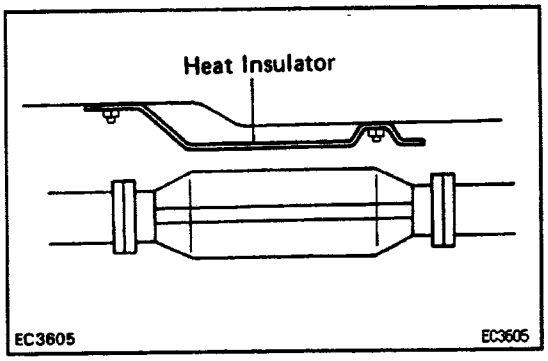

HEAT INSULATOR INSPECTION

1. CHECK HEAT INSULATOR FOR DAMAGE

2. CHECK FOR ADEQUATE CLEARANCE BETWEEN CATALYTIC CONVERTER AND HEAT INSULATOR

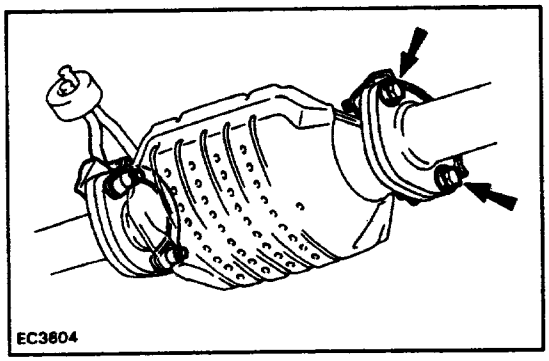

THREE–WAY CATALYTIC CONVERTER REPLACEMENT

1. REMOVE CONVERTER

(a) Jack up the vehicle.
(b) Check that the converter is cool.
(c) Remove the bolts at the front and rear of the converter.
(d) Remove the converter and gasket.

2. INSTALL CONVERTER

(a) Place new gaskets on the converter front and rear pipes, and connect the converter to the exhaust pipes.
(b) Torque the bolts.
Torque: 39 N–m (400 kgf–cm, 29 ft–lbf)
(c) Reinstall the bracket bolts and tighten them.

SERVICE SPECIFICATIONS

SERVICE DATA

VSV for EGR	Resistance (at 20° C (68° F))	**30 – 50 Ω**
VSV for PAIR	Resistance (at Z0* C (68* F))	**30 – 50 Ω**

B31FR–02

TORQUE SPECIFICATIONS

Part tightened	N–m	kgf–cm	ft–lbf
TVV x Cylinder block	**25**	**250**	**18**
TWC x Exhaust pipe	**39**	**400**	**29**

EMISSION CONTROL SYSTEMS

SYSTEM PURPOSE

The emission control systems are installed to reduce the amount of CO, HC and NOx exhausted from the engine ((3), (4), (5) and (6)), to prevent the atmospheric release of blow–by gas containing HC (1) and evaporated fuel containing HC being released from the fuel tank (2).
The function of each system is shown in the following table.

System	Abbreviation	Function
(1) Positive Crankcase Ventilation	PCV	Reduces crank case blow–by gas
(2) Evaporative Emission Control .	EVAP	Reduces evaporated HC
(3) Exhaust Gas Recirculation	EGR	Reduces NOx
(4) Pulsed secondary air injection	PAIR	Reduces CO and HC
(5) Three – Way Catalytic Converter	TWC	Reduces CO, HC and NOx
(6) Multiport Fuel Injection ’	MFI	Injects a precisely timed, optimum amount of fuel for reduced exhaust emissions

Remark: ’ For inspection and repair of the MFI system, refer to the MFI section this manual.

PREPARATION

RECOMMENDED TOOLS

	**09082–00050** TOYOTA Electrical Tester Set.	
	**09258–00030** Hose Plug Set .	

EQUIPMENT

Torque wrench	
Vacuum gauge	

SSM (SPECIAL SERVICE MATERIALS)

	08833–00070 Adhesive 1324, THREE BOND 1324 or equivalent	**TVV**

THREE–WAY CATALYTIC CONVERTER (TWC) SYSTEM

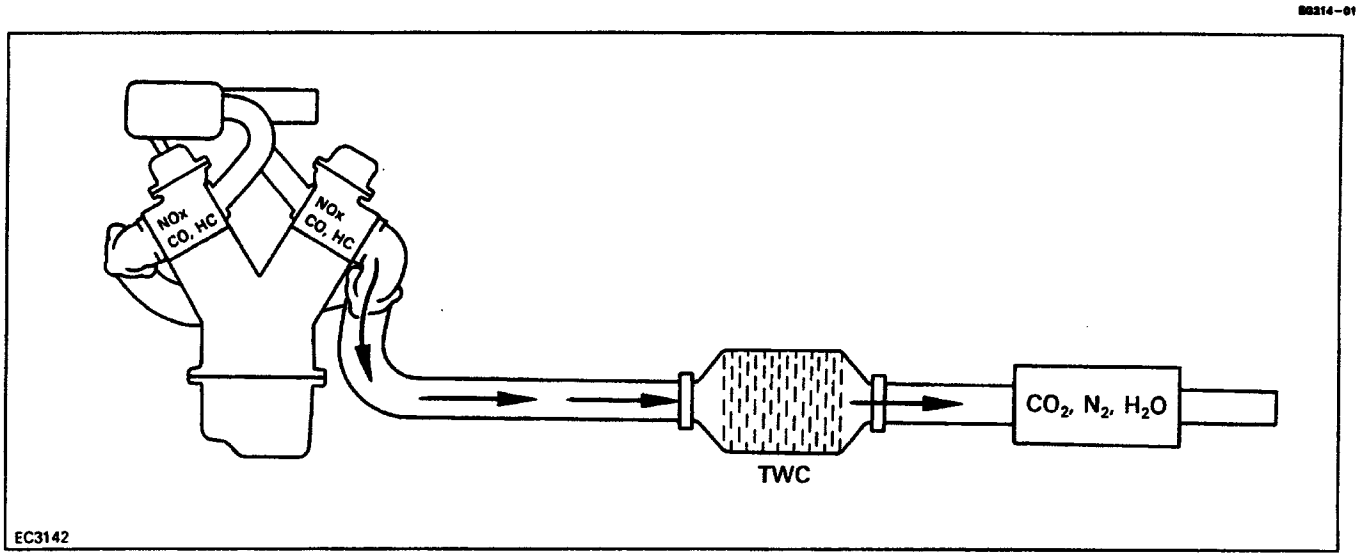

To reduce HC, CO and NOx emissions, they are oxidized, reduced and converted to nitrogen (N2), carbon dioxide (CO2) and water (HO by the catalyst.

Exhaust Port		TWC		Exhaust Gas
HC, CO and NOx	→	Oxidation and reduction	→	C02 H2O N2

V01947

EXHAUST PIPE ASSEMBLY INSPECTION

1. CHECK CONNECTIONS FOR LOOSENESS OR DAMAGE

2. CHECK CLAMPS FOR WEAKNESS, CRACKS OR DAMAGE

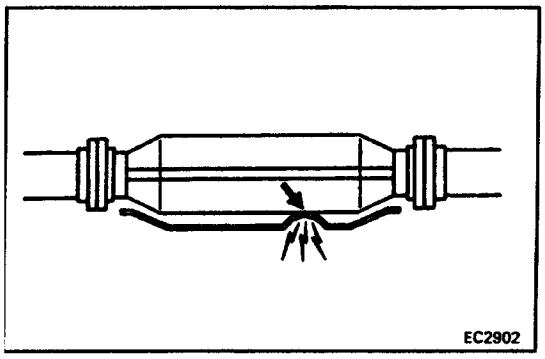

THREE–WAY CATALYTIC CONVERTER INSPECTION

CHECK FOR DENTS OR DAMAGE

If any part of the protector is damaged or dented to the extent that it contacts the catalyst, repair or replace it.

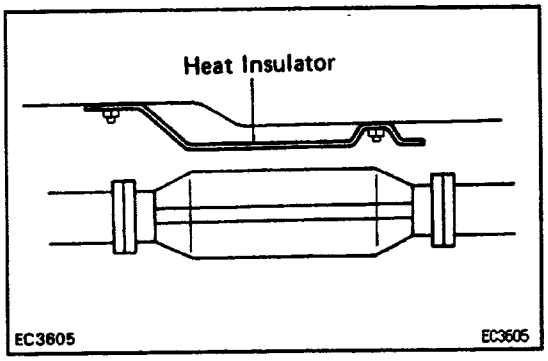

HEAT INSULATOR INSPECTION

1. CHECK HEAT INSULATOR FOR DAMAGE

2. CHECK FOR ADEQUATE CLEARANCE BETWEEN CATALYTIC CONVERTER AND HEAT INSULATOR

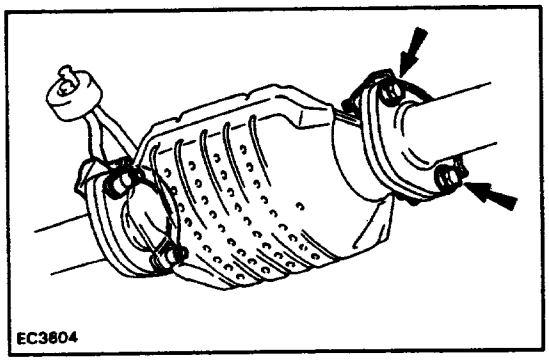

THREE–WAY CATALYTIC CONVERTER REPLACEMENT

1. REMOVE CONVERTER

(a) Jack up the vehicle.
(b) Check that the converter is cool.
(c) Remove the bolts at the front and rear of the converter.
(d) Remove the converter and gasket.

2. INSTALL CONVERTER

(a) Place new gaskets on the converter front and rear pipes, and connect the converter to the exhaust pipes.
(b) Torque the bolts.
Torque: 39 N–m (400 kgf–cm, 29 ft–lbf)
(c) Reinstall the bracket bolts and tighten them.

SERVICE SPECIFICATIONS
SERVICE DATA

VSV for EGR	Resistance (at 20° C (68° F))	**30 – 50 Ω**
VSV for PAIR	Resistance (at Z0* C (68* F))	**30 – 50 Ω**

B31FR–02

TORQUE SPECIFICATIONS

Part tightened	N–m	kgf–cm	ft–lbf
TVV x Cylinder block	**25**	**250**	**18**
TWC x Exhaust pipe	**39**	**400**	**29**

COMPRESSION CHECK

HINT: If there is lack of power, excessive oil consumption or poor fuel economy, measure the compression pressure.

1. WARM UP AND STOP ENGINE

Allow the engine to warm up to normal operating temperature.

2. REMOVE AIR CLEANER HOSE

3. DISCONNECT COLD START INJECTOR CONNECTOR

4. DISCONNECT IGNITER CONNECTOR

5. DISCONNECT HIGH–TENSION CORDS FROM SPARK PLUGS

Disconnect the high – tension cords at the rubber boot. Do not pull on the cords.

NOTICE: Pulling on or bending the cords may damage the conductor inside.

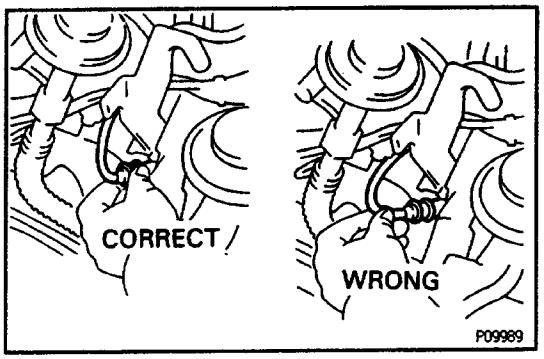

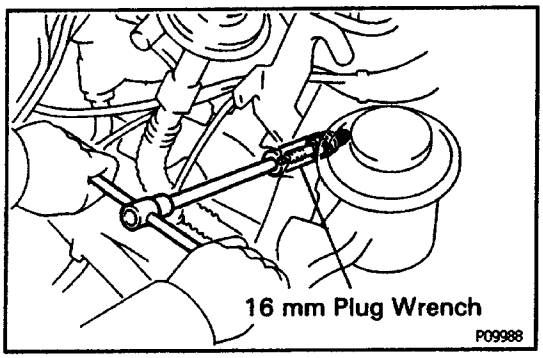

6. REMOVE SPARK PLUGS

Using a 16 mm plug wrench, remove the 6 spark plugs.

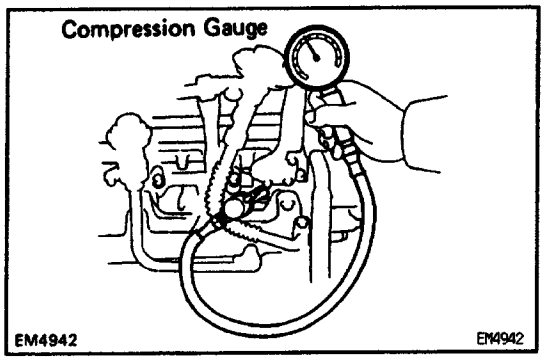

7. CHECK CYLINDER COMPRESSION PRESSURE

(a) Insert a compression gauge into the spark plug hole.

(b) Fully open the throttle.

(c) While cranking the engine, measure the compression pressure.

HINT: Always use a fully charged battery to obtain engine speed of 250 rpm or more.

(d) Repeat steps

(a) through

(c) for each cylinder.

NOTICE: This measurement must be done in as short a time as possible.

Compression pressure:

1.177 kPa (12.0 kgf/cm2, 171 psi)

Minimum pressure:

981 kPa (10.0 kgf/cm2, 142 psi)

Difference between each cylinder:

98 kPa (1.0 kgf/cm2, 14 psi) or less

(e) If the cylinder compression in one or more cylinders is low, pour a small amount of engine oil into the cylinder through the spark plug hole and repeat steps (a) through (c) for cylinders with low compression.

- If adding oil helps the compression, chances are that the piston rings and/or cylinder bore are worn or damage.
- If pressure stays low, a valve may be sticking or seating is improper, or there may be leakage past the gasket.

8. REINSTALL SPARK PLUGS

Using a 16 mm plug wrench, install the 6 spark plugs.

Torque: 18 N–m (180 kgf–cm, 13 ft–lbf)

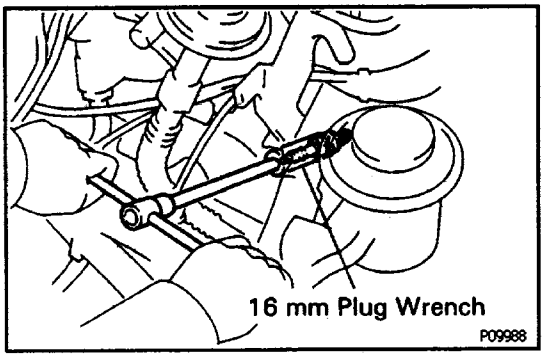

9. RECONNECT HIGH–TENSION CORDS TO SPARK PLUGS

10. CONNECT IGNITER CONNECTOR

11. CONNECT COLD START INJECTOR CONNECTOR

12. INSTALL AIR CLEANER HOSE

CYLINDER BLOCK

COMPONENTS FOR REMOVAL AND INSTALLATION

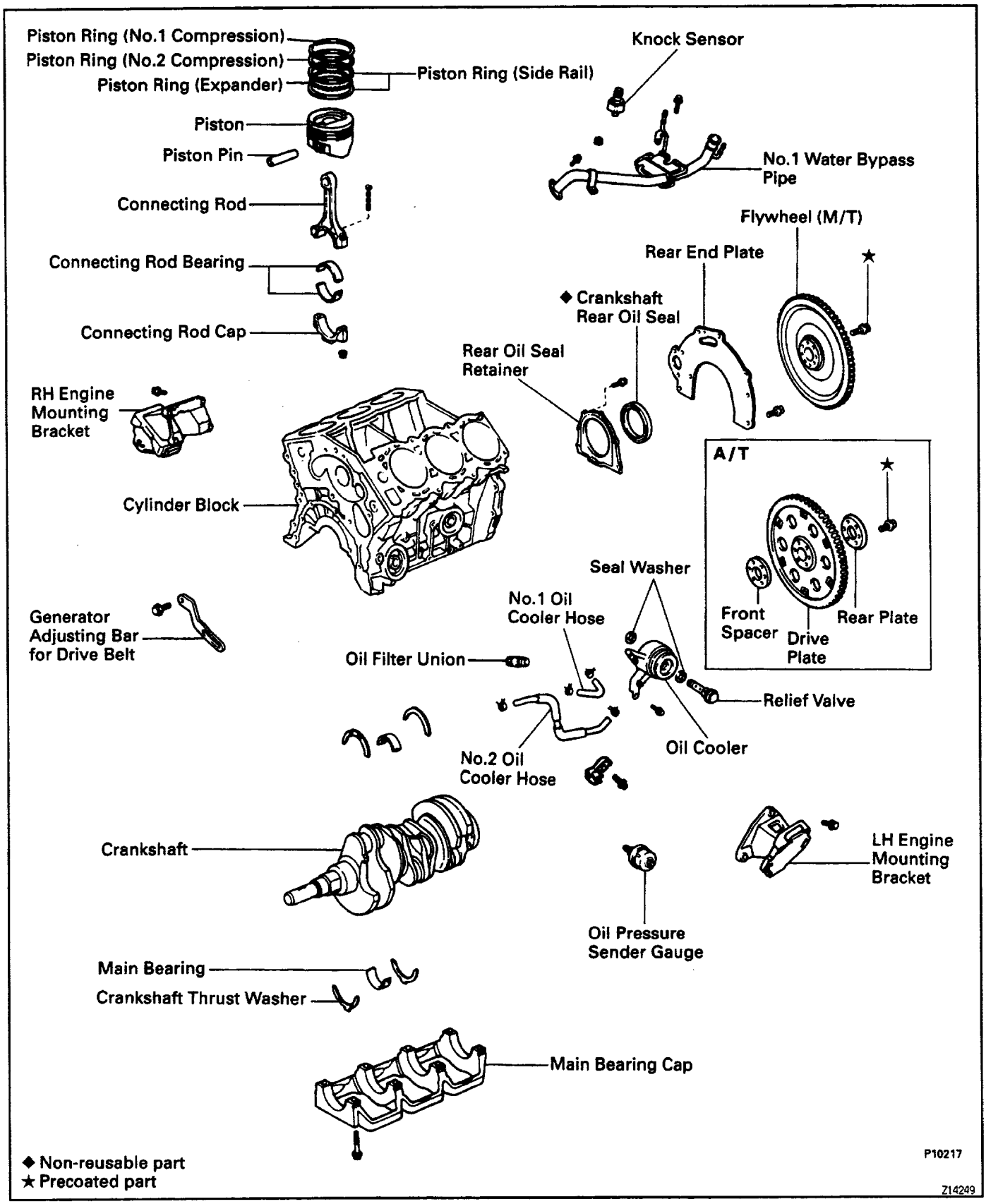

ENGINE REMOVAL

1. REMOVE HOOD
2. REMOVE BATTERY
3. REMOVE ENGINE UNDER COVER
4. DRAIN ENGINE COOLANT
5. DRAIN ENGINE OIL
6. REMOVE AIR CLEANER AND HOSE

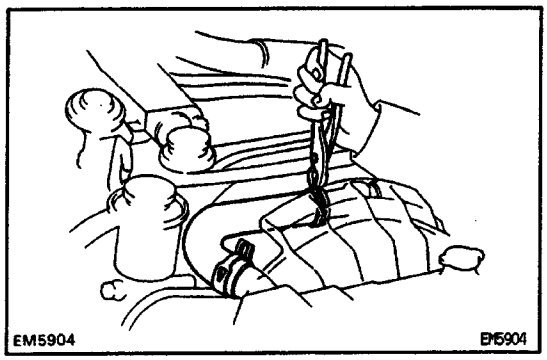

7. REMOVE RADIATOR
(a) Disconnect the reservoir hose.
(b) A/T only:
Disconnect the oil cooler hoses.
(c) Remove the radiator hoses.

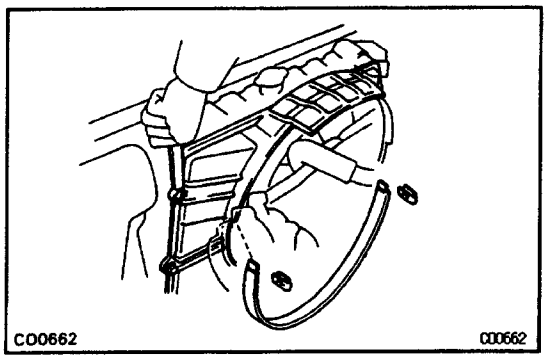

(d) Remove the 2 clips and No.2 fan shroud.
(e) Remove the 4 bolts and No.1 fan shroud.
(f) Remove the 4 bolts and radiator.

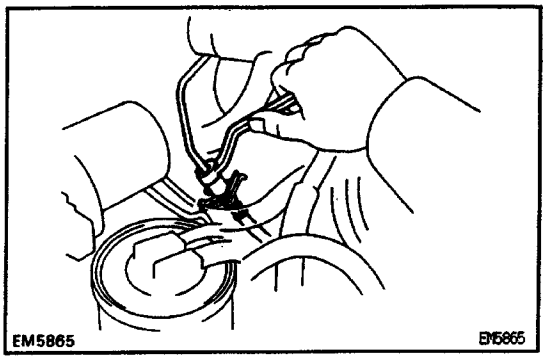

8. M/T only:
DISCONNECT CLUTCH RELEASE CYLINDER HOSE

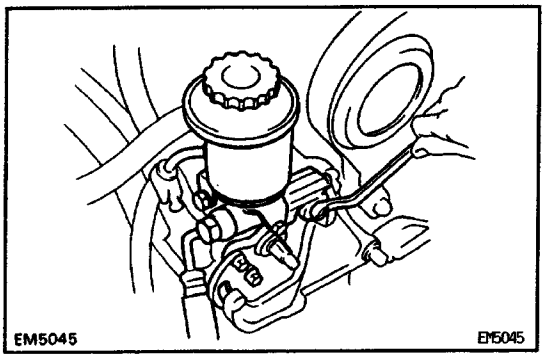

9. REMOVE PS DRIVE BELT AND PUMP PULLEY
10. DISCONNECT PS PUMP FROM ENGINE
11. REMOVE A/C DRIVE BELT

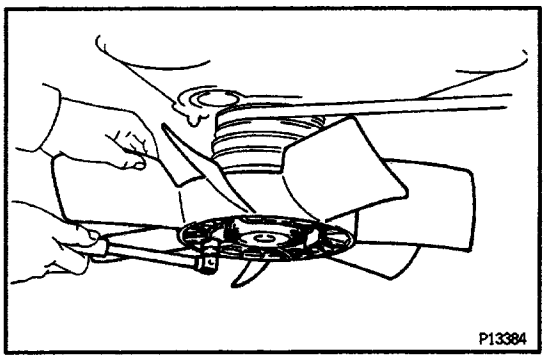

12. REMOVE COOLING FAN

Remove the 4 nuts and cooling fan.

13. REMOVE GENERATOR DRIVE BELT

14. DISCONNECT STRAP, WIRES. CONNECTORS, HOSES AND CABLES

(a) Disconnect the strap, wires and connectors:

- Ground strap from LH fender apron
- Generator connector and wire
- Igniter connector
- Oil pressure sender gauge connector
- Ground strap from engine rear side
- ECM connectors
- VSV connectors
- A/C compressor connector
  M/T only:
  Starter relay connector
- Solenoid resister connector
- DLC1
- w/ ADD:
  ADD switch connector

(b) Disconnect these hoses:

- PS air hoses from gas filter and air pipe
- Brake booster hose
- w/ Cruise Control System:
  Cruise control vacuum hose
- Charcoal canister hose from canister
- VSV vacuum hoses

(c) Disconnect these cables:

- Accelerator cable
- A/T only:
  Throttle cable
- w/ Cruise Control System:
  Cruise control cable

15. DISCONNECT HEATER HOSES

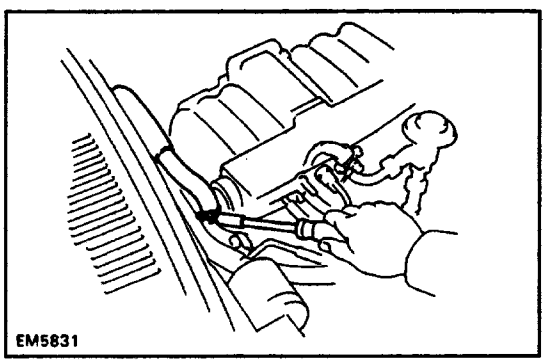

16. DISCONNECT FUEL INLET AND OUTLET HOSES

17. DISCONNECT A/C COMPRESSOR FROM ENGINE

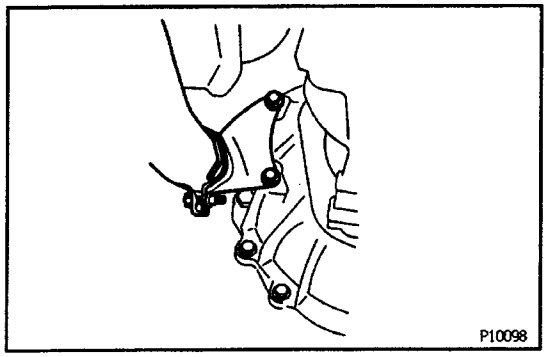

18. REMOVE FRONT EXHAUST PIPE

(a) Disconnect the heated oxygen sensor connector.

(b) Loosen the pipe clamp bolt.

(c) Remove the 2 bolts and pipe bracket.

(d) Remove the 3 nuts, and disconnect the exhaust pipe from the exhaust manifold. Remove the gasket.

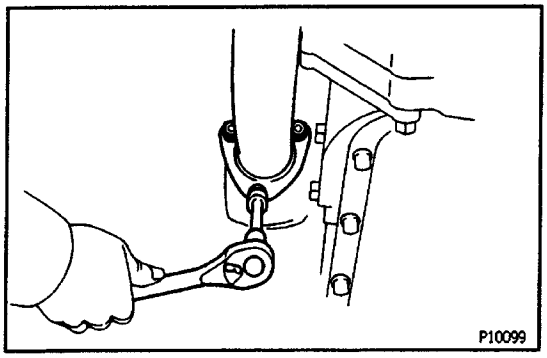

(e) Remove the 2 bolts, joint retainer, exhaust pipe and gasket from the catalytic converter.

19. M/T only:
REMOVE SHIFT LEVERS

20. REMOVE REAR PROPELLER SHAFT
(See propeller shaft removal in Propeller shaft)

21. 4WD only:
REMOVE FRONT PROPELLER SHAFT
(See propeller shaft removal in Propeller shaft)

22. 2WD A/T only:
DISCONNECT MANUAL SHIFT LINKAGE

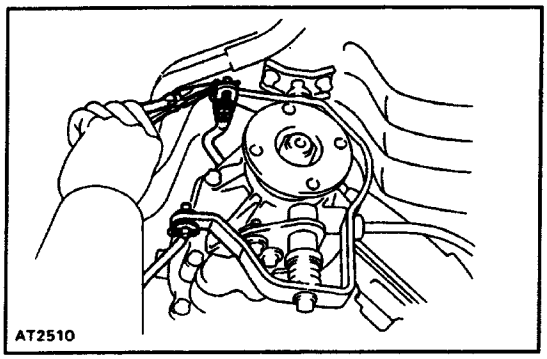

23. 4WD A/T only:
DISCONNECT TRANSFER SHIFT LINKAGE

(a) Disconnect the No.1 and No.2 transfer shift linkages from the cross shaft.

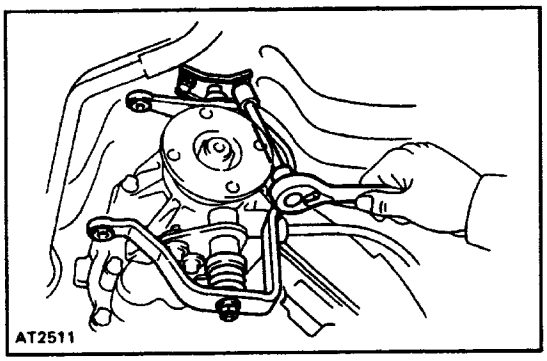

(b) Remove the cross shaft from the body.

24. DISCONNECT SPEEDOMETER CONNECTOR

NOTICE: Do not lose the felt dust protector and washers.

25. 4WD only:

REMOVE TRANSFER UNDER COVER

26. 4WD only:

REMOVE STABILIZER BAR

27. REMOVE NO.1 FRONT FLOOR HEAT INSULATOR AND BRAKE TUBE HEAT INSULATOR (4WD)

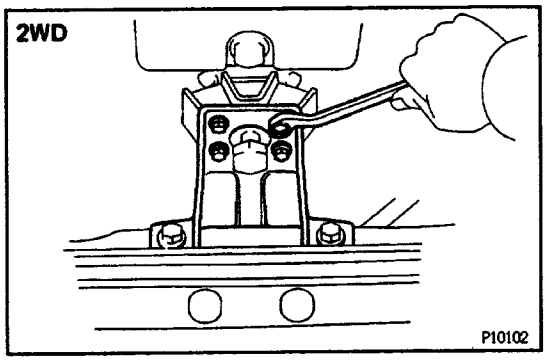

28. 2WD:

REMOVE ENGINE REAR MOUNTING BRACKET

(a) Remove the 4 bolts holding the mounting bracket to the mounting insulator.

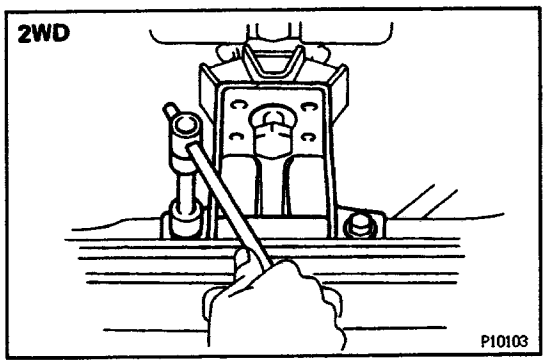

(b) Raise the transmission slightly by raising the engine with a jack.

(c) Remove the 4 bolts holding the mounting bracket to the support member, and remove the mounting bracket.

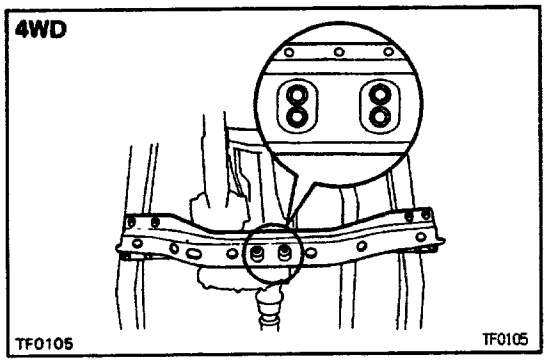

29. 4WD:

REMOVE NO.2 FRAME CROSSMEMBER

(a) Remove the 4 bolts holding the engine rear mounting insulator to the frame crossmember.

(b) Raise the transmission slightly with a jack.

(c) Remove the 8 bolts holding the frame crossmember tc the side frame. Remove the frame crossmember.

30. REMOVE ENGINE AND TRANSMISSION ASSEMBLY FROM VEHICLE

(a) Attach the engine chain hoist to the engine hangers.

(b) Remove the 4 bolts holding the RH and LH engine mounting insulators to the body mountings.

(c) Lift the engine and transmission assembly out of the vehicle slowly and carefully.

HINT: Make sure the engine is clear of all wiring, hoses and cables.

NOTICE: Be careful not hit the PNP switch.

(d) Place the engine and transmission assembly onto the stand.

31. REMOVE TRANSMISSION FROM ENGINE

32. M/T only:

REMOVE CLUTCH COVER AND DISC

PREPARATION FOR DISASSEMBLY

(See Components for Removal and Installation)

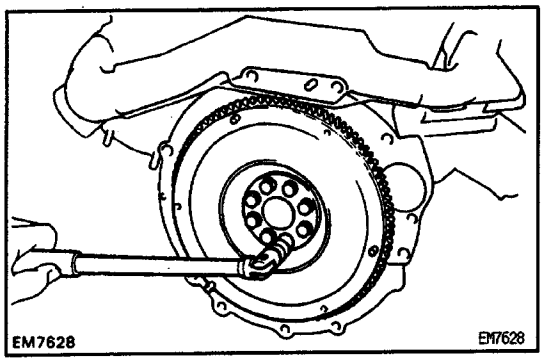

1. REMOVE FLYWHEEL OR DRIVE PLATE

(a) Remove the 8 bolts.

(b) M/T:

Remove the flywheel.

(c) A/T:

Remove the rear plate, drive plate and front spacer.

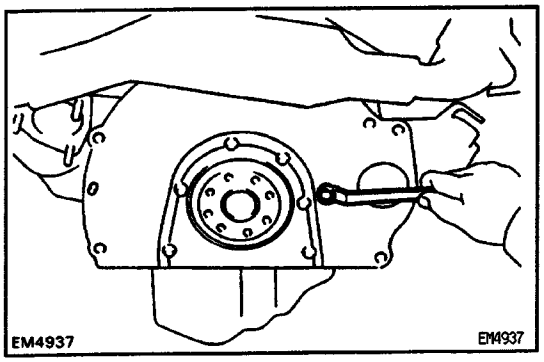

2. REMOVE REAR END PLATE

Remove the bolt and rear end plate.

3. INSTALL ENGINE STAND FOR DISASSEMBLY

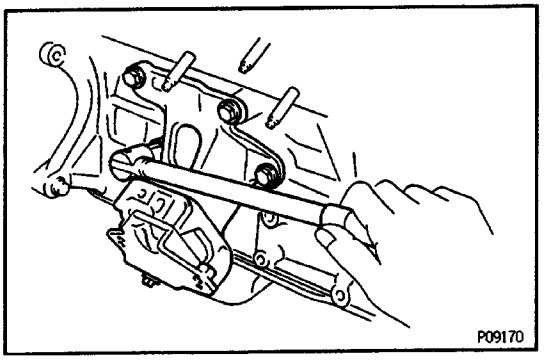

4. REMOVE RH AND !.H ENGINE MOUNTING BRACKETS

Remove the 4 bolts and mounting bracket. Remove the 2 mounting brackets.

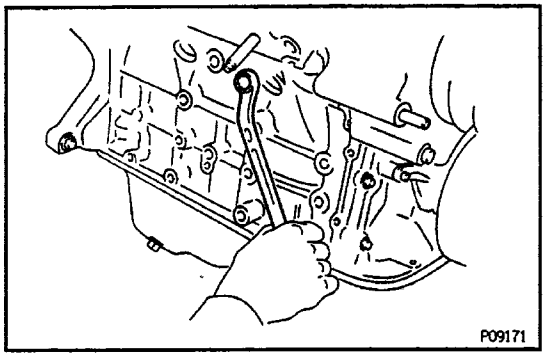

5. REMOVE ENGINE COOLANT DRAIN PLUGS

6. REMOVE TIMING BELT

(See steps 13 to 24 timing belt removal in timing belt)

7. REMOVE CYLINDER HEADS

(See steps 15 to 37 cylinder head removal in cylinder head)

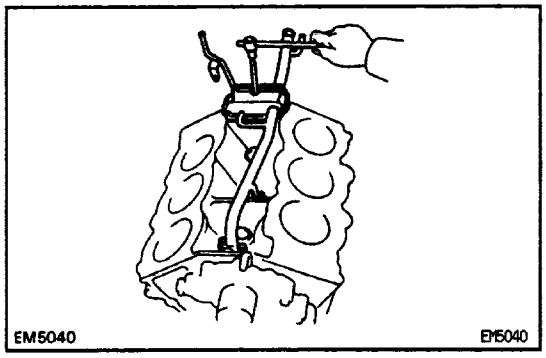

8. REMOVE NO.1 WATER BYPASS PIPE

Remove the 2 nuts, 2 bolts and water bypass pipe.

9. REMOVE WATER INLET AND THERMOSTAT

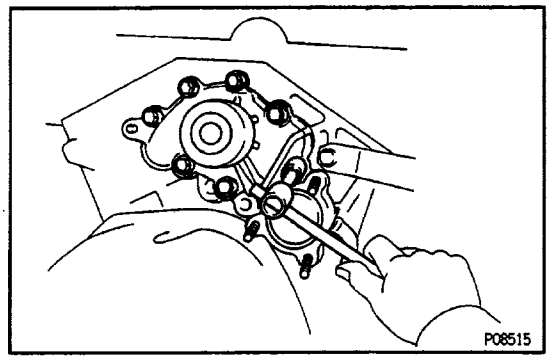

10. REMOVE WATER PUMP

Remove the 7 bolts and water pump.

11. REMOVE GENERATOR ADJUSTING BAR

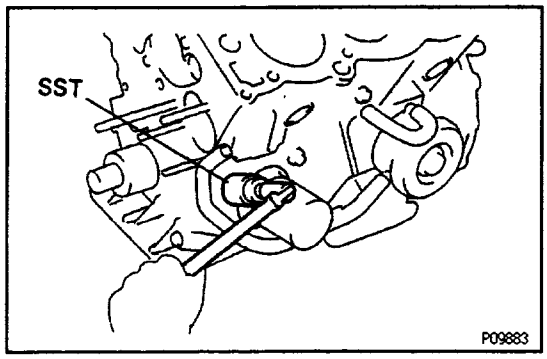

12. REMOVE OIL PRESSURE SENDER GAUGE

Using SST, remove the oil pressure sender gauge.

SST 09816 – 30010

13. REMOVE OIL FILTER

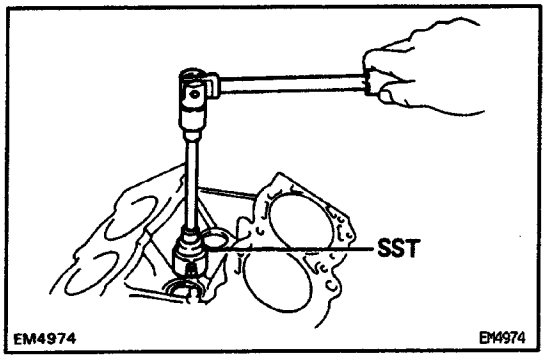

14. REMOVE KNOCK SENSOR

Using SST, remove the knock sensor.
SST 09817–16011

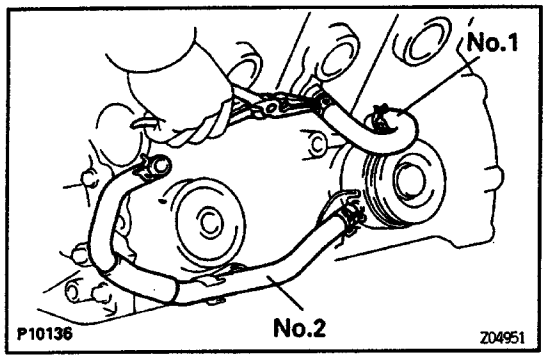

16. REMOVE OIL COOLER

(a) Remove the No.1 and No.2 oil cooler hoses.

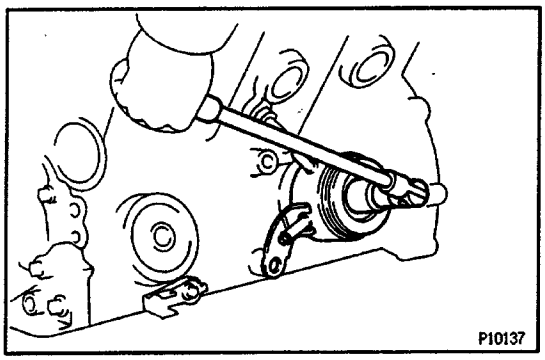

(b) Remove the bolt holding the bracket to the cylinder block.
(c) Remove the relief valve, seal washer, oil cooler and seal washer.
(d) Remove the O–ring and gasket from the oil cooler.

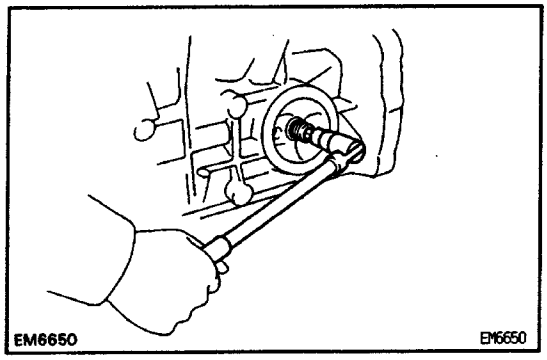

16. REMOVE OIL FILTER UNION

Using a 12 mm hexagon wrench, remove the oil filter union.

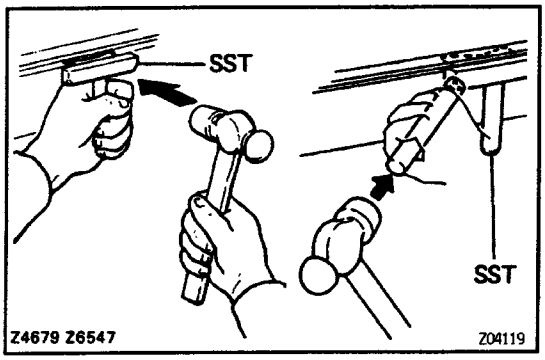

17. REMOVE OIL PAN

(a) Remove the 17 bolts and 2 nuts.
(b) Insert the blade of SST between the baffle plate and oil pan, cut oft applied sealer and remove the oil pan.
SST 09032–00100
NOTICE: Be careful not to damage the oil pan and baffle plate flanges.

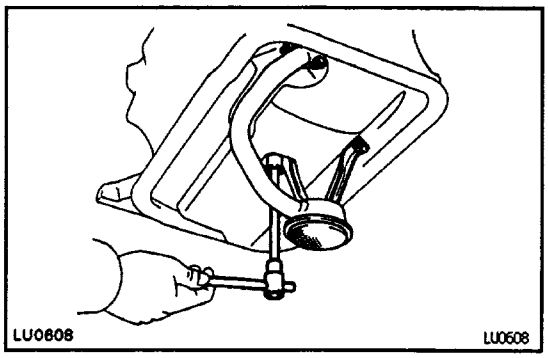

18. REMOVE OIL STRAINER

Remove the 2 bolts, 2 nuts, oil strainer and gasket.

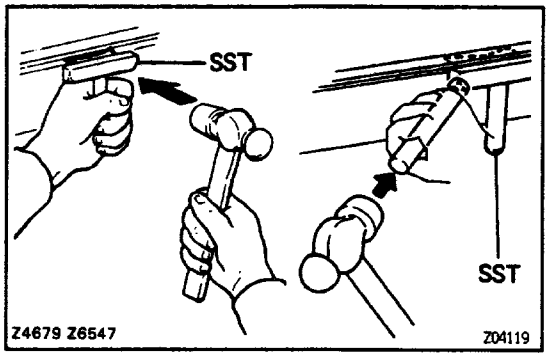

19. REMOVE OIL PAN BAFFLE PLATE

. Insert the blade of SST between the cylinder block and baffle plate, cut off applied sealer and remove the baffle plate.

SST 09032 – 00100

NOTICE:

- **Do not use SST for the oil pump and rear oil seal retainer.**
- **Be careful not to damage the baffle plate flange.**

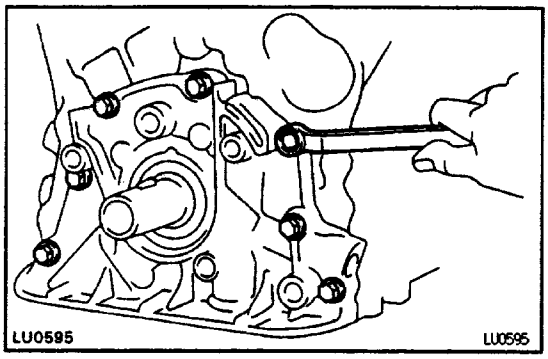

20. REMOVE OIL PUMP

(a) Remove the 7 bolts.

(b) Using a plastic–faced hammer, carefully tap oft the oil pump.

(c) Remove the O–ring from the cylinder block.

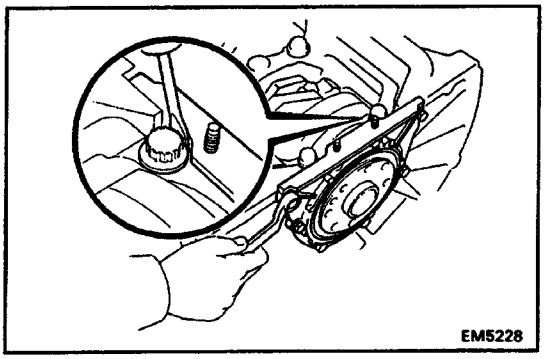

CYLINDER BLOCK DISASSEMBLY

(See Components for Removal and installation)

1. REMOVE REAR OIL SEAL RETAINER

Remove the 6 bolts and retainer.

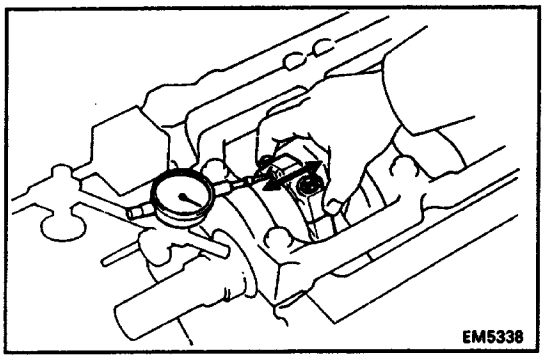

2. CHECK CONNECTING ROD THRUST CLEARANCE

Using a dial indicator, measure the thrust clearance while moving the connecting rod back and forth.

Standard thrust clearance:

0.150 – 0.330 mm (0.0059 – 0.0130 in.)

Maximum thrust clearance:

0.38 mm (0.0150 in.)

If the thrust clearance is greater than maximum, replace the connecting rod assembly. If necessary, replace the crankshaft.

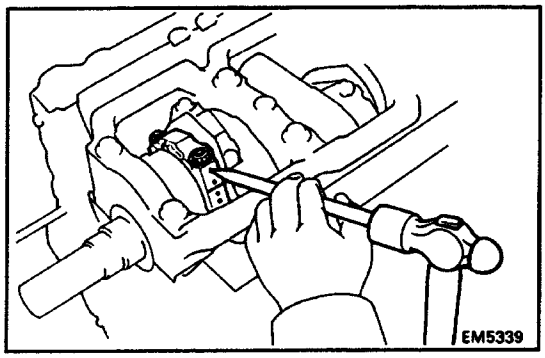

3. REMOVE CONNECTING ROD CAPS AND CHECK OIL CLEARANCE

(a) Using a punch or numbering stamp, mark the connecting rod and cap to ensure correct reassembly.

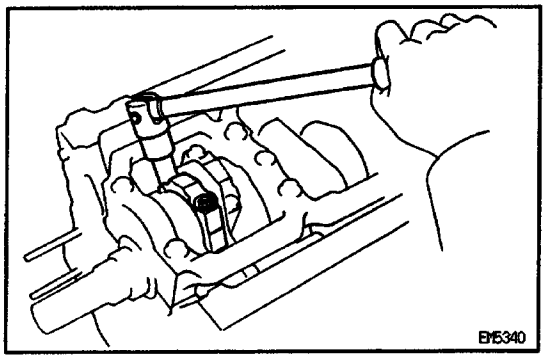

(b) Remove the connecting rod cap nuts.

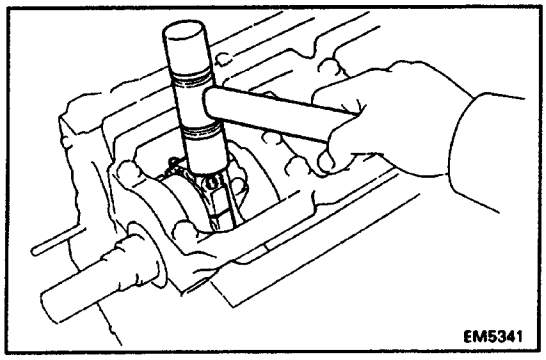

(c) Using a plastic–faced hammer, lightly tap the connecting rod bolts and lift off the connecting rod cap.

HINT: Keep the lower bearing inserted with the connecting rod cap.

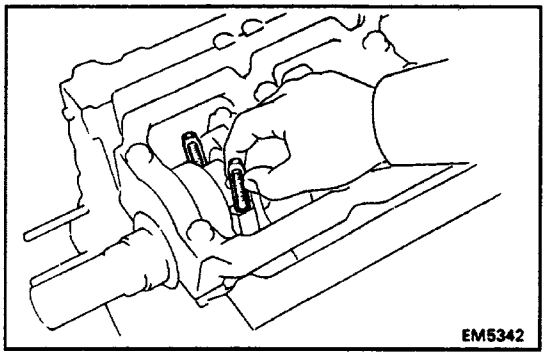

(d) Cover the connecting rod bolts with a short piece of hose to protect the crankshaft from damage.

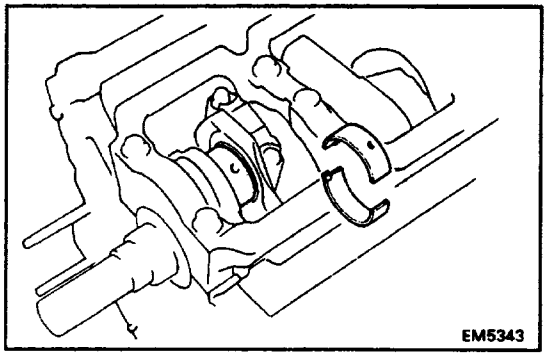

(e) Clean the crank pin and bearing.
(f) Check the crank pin and bearing for pitting and scratches.
If the crank pin or bearing is damaged, replace the bearings. If necessary, grind or replace the crankshaft.

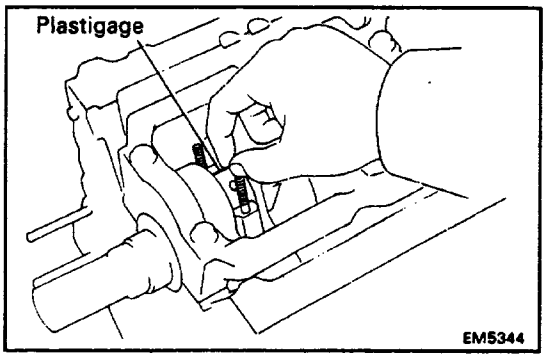

(g) Lay a strip of Plastigage across the crank pin.

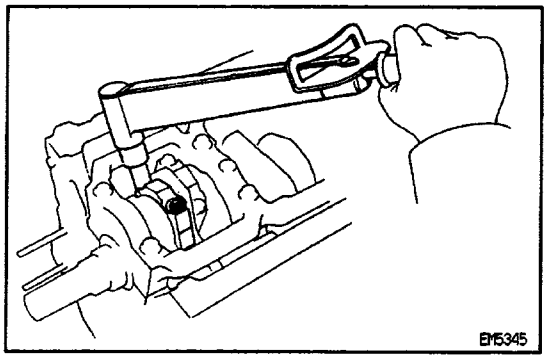

(h) Install the connecting rod cap with the 2 nuts.
(See step 7 in cylinder block assembly)
Torque:
1st 25 N–m (250 kgf–cm, 18 ft–lbf)
2nd Turn extra 90°
NOTICE: Do not turn the crankshaft.

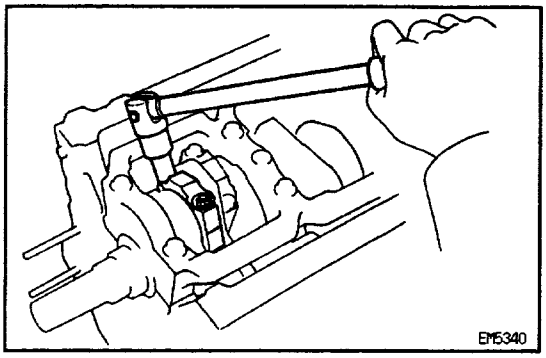

(i) Remove the 2 nuts and connecting rod cap.
(See procedure (b) and (c) above)

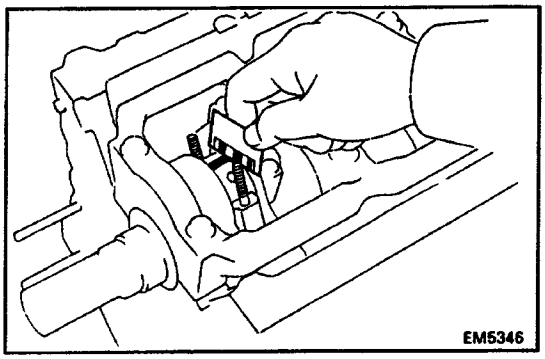

(j)Measure the Plastigage at its widest point.
Standard oil clearance:

STD

0.024 – 0.053 mm (0.0009 – 0.0021 in.)

U/S 0.25 and U/S 0.50

0.023 – 0.069 mm (0.0009 – 0.0027 in.)

Maximum oil clearance:

0.08 mm (0.0031 in.)

If the oil clearance is greater than maximum, replace the bearings. If necessary, grind or replace the crankshaft.

HINT: If using a standard bearing, replace with one having the same number marked on the connecting rod cap. There are 3 sizes of standard bearings, marked ”1”, ”2” and ”3” accordingly.

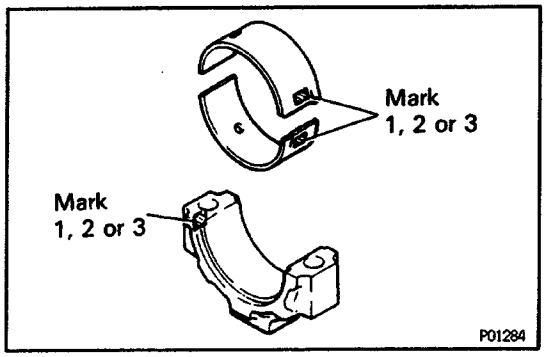

– Reference –

Standard sized bearing center wall thickness	"1"	1.484 – 1.488 mm (0.0584 – 0.0586 in.)
	"2"	1.488 – 1.492 mm (0.0586 – 0.0587 in.)
	"3"	1.492 – 1.496 mm (0.0587 – 0.0589 in.)
Connecting rod big end inside diameter	"1"	58.000 – 58.008 mm (2.2835 – 2.2838 in.)
	"2"	58.008 – 58.016 mm (2.2838 – 2.2841 in.)
	"3"	58.016 – 58.024 mm (2.2841 – 2.2844 in.)
Crank pin diameter	–	54.987 – 55.000 mm (2.1648 – 2.1654 in.)

(k) Completely remove the Plastigage.

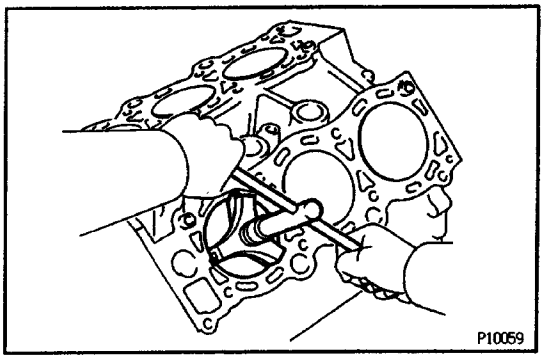

4. REMOVE PISTON AND CONNECTING ROD ASSEMBLIES

(a) Using a ridge reamer, remove the all carbon from the top of the cylinder.

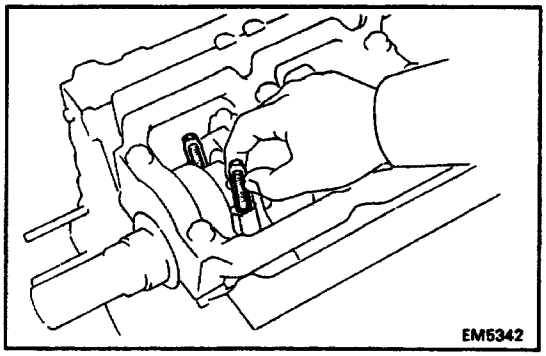

(b) Cover the connecting rod bolts with a short piece of hose to protect the crankshaft from damage.
(c) Push the piston, connecting rod assembly and upper bearing through the top of the cylinder block.

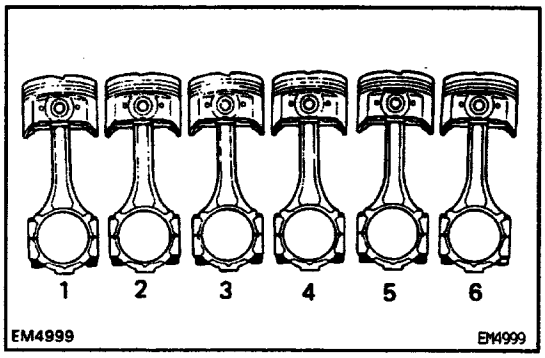

HINT:

- Keep the bearings, connecting rod and cap together.
- Arrange the piston and connecting rod assemblies in correct order.

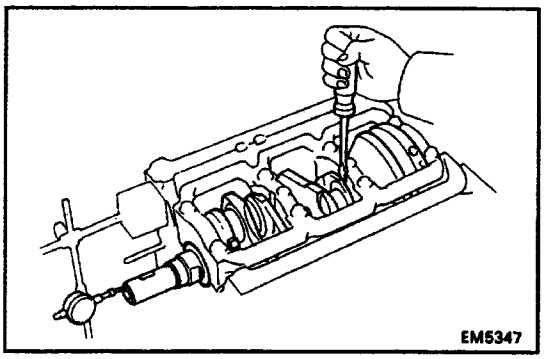

5. CHECK CRANKSHAFT THRUST CLEARANCE

Using a dial indicator, measure the thrust clearance while prying the crankshaft back and forth with a screwdriver.

Standard thrust clearance:

0.020 – 0.220 mm (0.0008 – 0.0087 in.)

Maximum thrust clearance:

0.30 mm (0.0118 in.)

If the thrust clearance is greater than maximum, replace the thrust washers as a set.

Thrust washer thickness:

2.440 – 2.490 mm (0.0961 – 0.0980 in.)

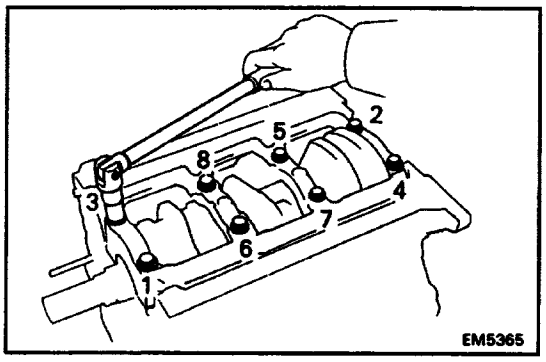

6. REMOVE MAIN BEARING CAP AND CHECK OIL CLEARANCE

(a) Uniformly loosen and remove the main bearing cap bolts, in several passes, in the sequence shown.

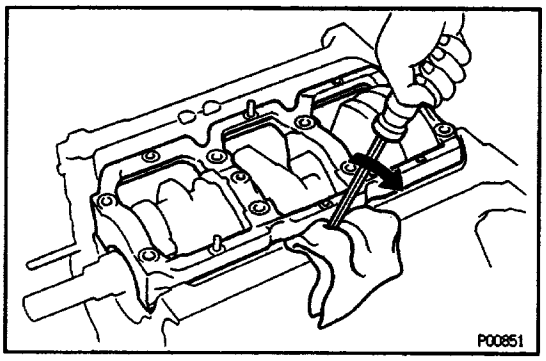

(b) Using a screwdriver, pry up the main beating cap, and remove the main bearing cap, lower main bearings and lower thrust washers (No.2 journal position of main bearing cap only).

HINT: Keep the lower main bearings and lower thrust washers together with the main bearing cap.

(c) Lift out the crankshaft.

HINT: Keep the upper main bearings and upper thrust washers together with the cylinder block.

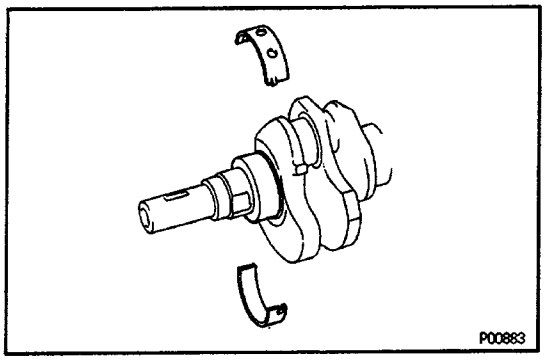

(d) Clean each main journal and bearing.
(e) Check each main journal and bearing for pitting and scratches.
If the journal or bearing is damaged, replace the bearings. (f necessary, grind or replace the crankshaft.

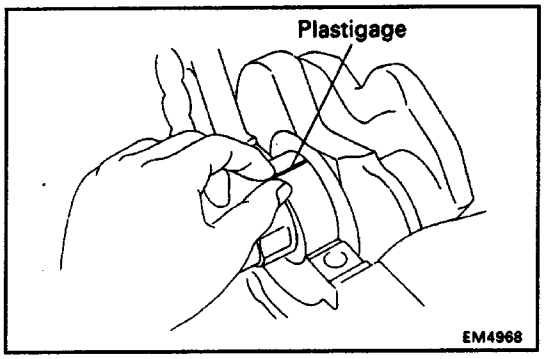

(f) Place the crankshaft on the cylinder block.
(g) Lay a strip of Plastigage across each journal.

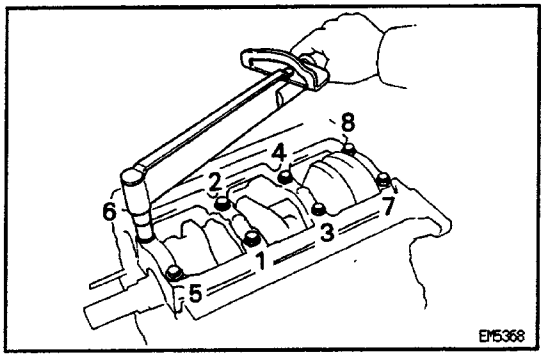

(h) Install the main bearing cap with the 8 bolts.
(See step 4 in cylinder block assembly)
Torque:
1st 61 N–m (625 kgf–cm, 45 ft–lbf)
2nd Turn extra 90°
NOTICE: Do not turn the crankshaft.

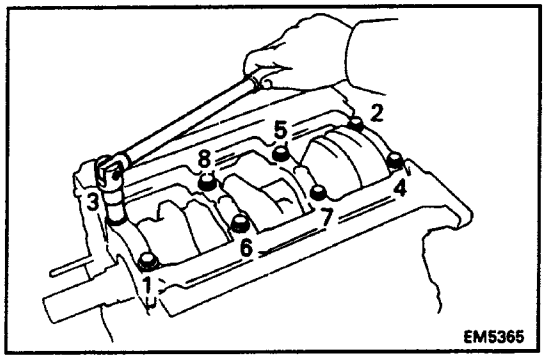

(i) Remove the 8 bolts and main bearing cap.
(See procedure (a) and (b) above)

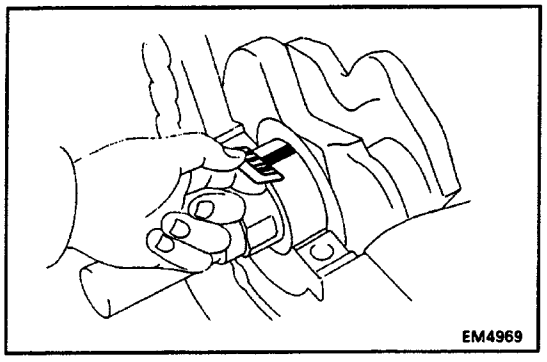

(j) Measure the Plastigage at its widest point.
Standard clearance:
No.1
STD
0.025 – 0.052 mm (0.0008 – 0.0020 in.)
U/S 0.25 and U/S 0.50
0.024 – 0.080 mm (0.0009 – 0.0031 in.)

Others

STD

0.029 – 0.056 mm (0.0011 – 0.0022 in.)

U/S 0.25 and U/S 0.50

0.028 – 0.077 mm (0.0011 – 0.0030 in.)

Maximum clearance:

0.08 mm (0.0031 in.)

HINT: If replacing the cylinder block subassembly, the bearing standard clearance will be:

No.1

0.027 – 0.063 mm (0.0011 – 0.0025 in.)

others

0.031 – 0.067 mm (0.0012 – 0.0026 in.)

If the oil clearance is greater than maximum, replace the bearings. If necessary, grind or replace the crankshaft.

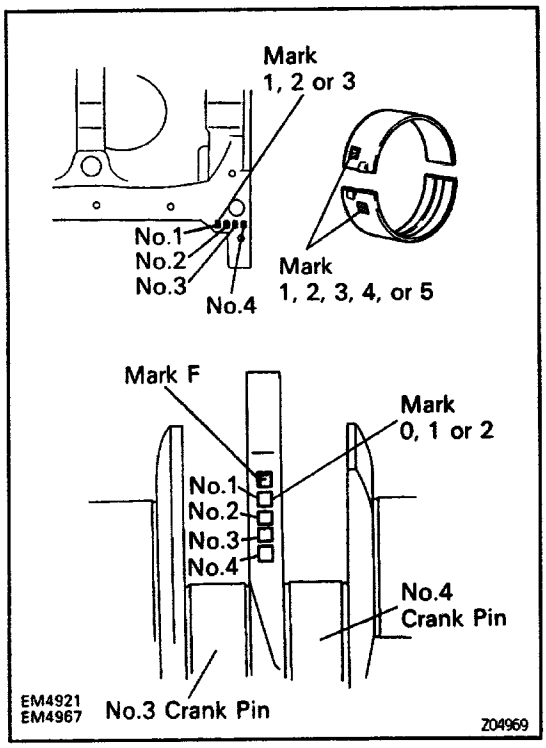

HINT: If using a standard bearing, replace with one having the same number. If the number of the bearing cannot be determined, select the correct bearing by adding together the numbers imprinted on the cylinder block and crankshaft, then selecting the bearing with the same number as the total. There are 5 sizes of standard bearings, marked ”1 ”, ”2”, ”3”, ”4” and ”5” accordingly.

	Number marked								
Cylinder block	1			2			3		
Crankshaft	0	1	2	0	1	2	0	1	2
Use bearing	1	2	3	2	3	4	3	4	5

EXAMPLE: Cylinder block ”2” + Crankshaft ”ll”
= Total number 3 (Use bearing ”3”)

– Reference –

Standard sized bearing center wall thickness No.1	"1"	1.991 – 1.994 mm (0.0784 – 0.0785 in.)
	"2"	1.994 – 1.997 mm (0.0785 – 0.0786 in.)
	"3"	1.997 – 2.000 mm (0.0786 – 0.0787 in.)
	"4"	2.000 – 2.003 mm (0.0787 – 0.0789 in.)
	"5"	2.003 – 2.006 mm (0.0789 – 0.0790 in.)
Others	"1"	1.989 – 1.992 mm (0.0783 – 0.0784 in.)
	"2"	1.992 – 1.995 mm (0.0784 – 0.0785 in.)
	"3"	1.995 – 1.998 mm (0.0785 – 0.0787 in.)
	"4"	1.998 – 2.001 mm (0.0787 – 0.0788 in.)
	"5"	2.001 – 2.004 mm (0.0788 – 0.0789 in.)
Cylinder block main journal bore diameter	"1"	68.010 – 68.061 mm (2.6776 – 2.6778 in.)
	"2"	68.016 – 68.022 mm (2.6778 – 2.6780 in.)
	"3"	68.022 – 68.028 mm (2.6780 – 2.6783 in.)
Crankshaft main journal diameter	"0"	63.996 – 64.000 mm (2.5195 – 2.5197 in.)
	"1"	63.990 – 63.996 mm (2.5193 – 2.5195 in.)
	"2"	63.985 – 63.990 mm (2.5191 – 2.5193 in.)

(k) Completely remove the Plastigage.

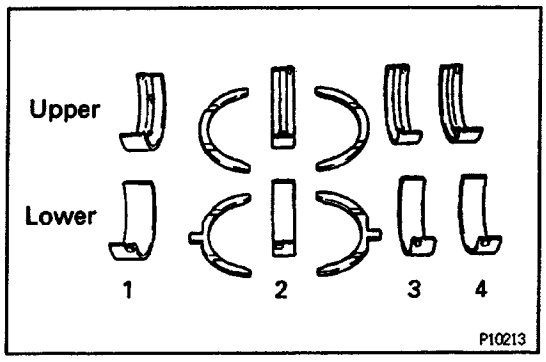

7. REMOVE CRANKSHAFT

(a) Lift out the crankshaft.

(b) Remove the upper main bearings and upper thrust washers from the cylinder block.

HINT: Arrange the main bearings and thrust washers in correct order.

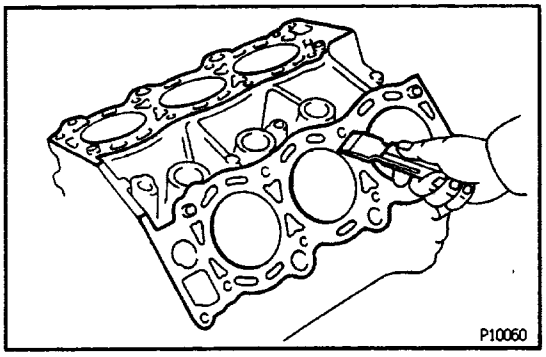

CYLINDER BLOCK INSPECTION

1. CLEAN CYLINDER BLOCK

A. Remove gasket material

Using a gasket scraper, remove all the gasket material from the top surface of the cylinder block.

B. Clean cylinder block

Using a soft brush and solvent, thoroughly clean the cylinder block.

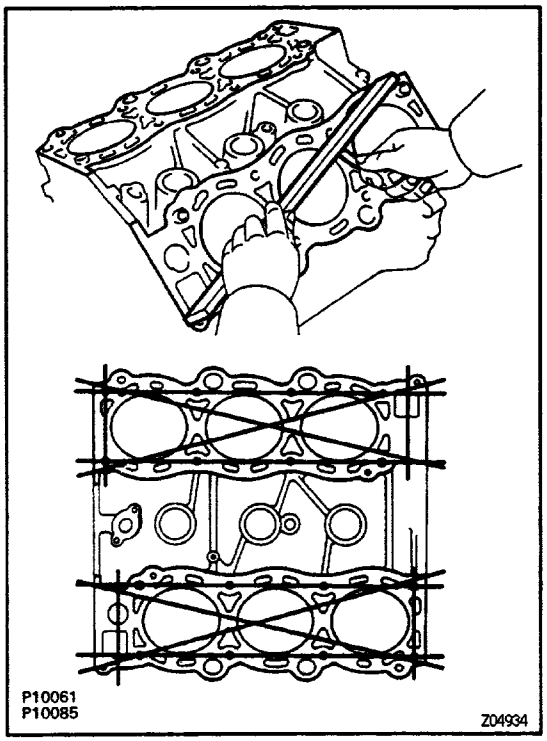

2. INSPECT TOP SURFACE OF CYLINDER BLOCK FOR FLATNESS

Using a precision straight edge and feeler gauge, measure the surfaces contacting the cylinder head gasket for warpage.

Maximum warpage:

0.05 mm (0.0020 in.)

If warpage is greater than maximum, replace the cylinder block.

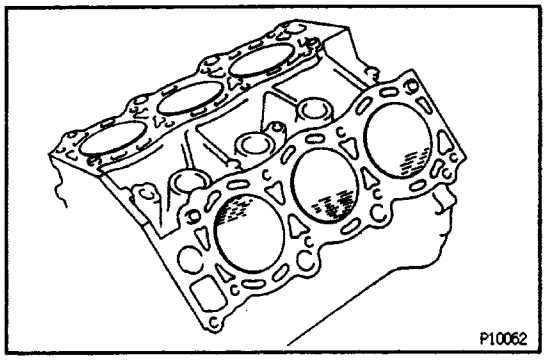

3. INSPECT CYLINDER FOR VERTICAL SCRATCHES

Visually check the cylinder for vertical scratches.

If deep scratches are present, rebore all the6 cylinders. If necessary, replace the cylinder block.

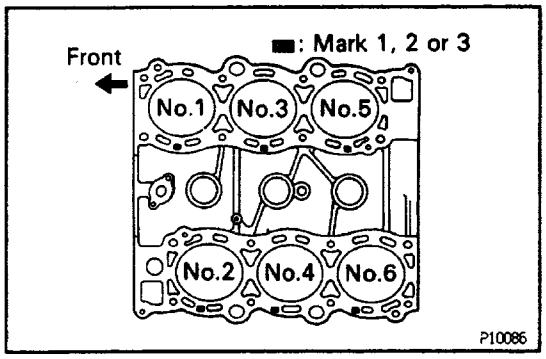

4. INSPECT CYLINDER BORE DIAMETER

HINT: There are 3 sizes of the standard cylinder bore diameter, remarked ”1’, ”2” and ”3” accordingly. The mark is stamped on the top of the cylinder block.

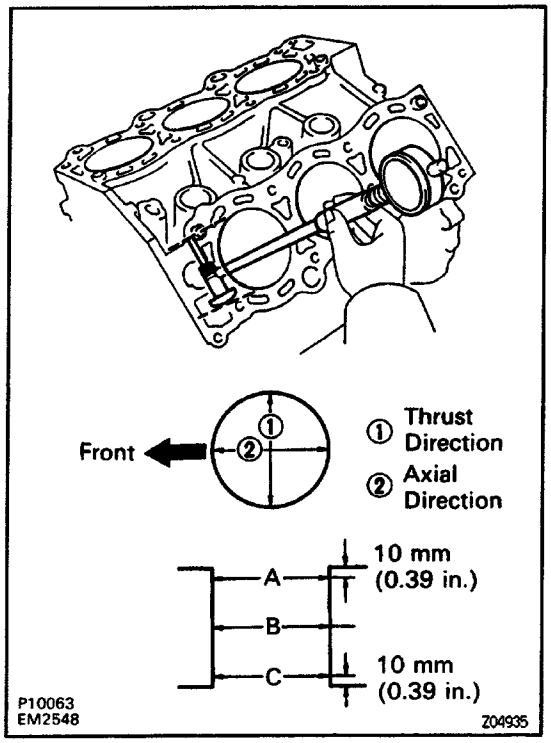

Using a cylinder gauge, measure the cylinder bore diameter at positions A, B and C in the thrust and axial directions.

Standard diameter:

STD

Mark '1'

87.500 – 87.510 mm (3.4449 – 3.4453 in.)

Mark '2'

87.510–87.520 mm (3.4453–3.4457 in.)

Mark '3"

87.520–87.530 mm (3.4457–3.4461 in.)

Maximum diameter:

STD

87.73 mm (3.4539 in.)

O/S 0.50

88.23 mm (3.4736 in.)

If the diameter is greater than maximum, rebore all the 6 cylinders. If necessary, replace the cylinder block.

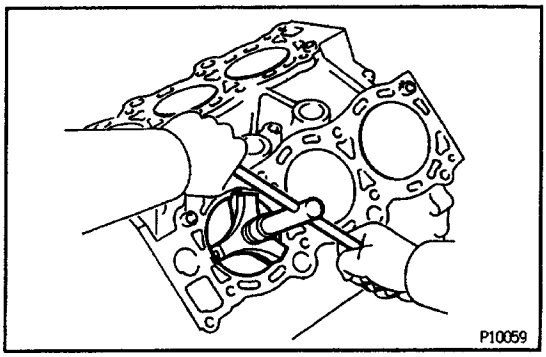

5. REMOVE CYLINDER RIDGE

If the wear is less than 0.2 mm (0.008 in.), using a ridge reamer, grind the top of the cylinder.

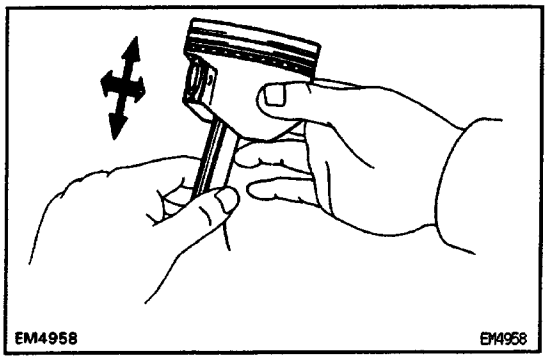

PISTON AND CONNECTING ROD DISASSEMBLY

1. CHECK FIT BETWEEN PISTON AND PISTON PIN

Try to move the piston back and forth on the piston pin. If any movement is felt, replace the piston and pin as a set.

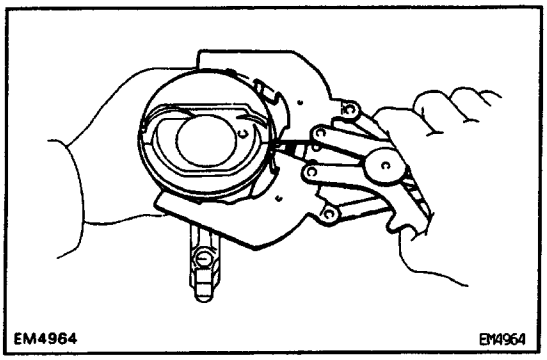

2. REMOVE PISTON RINGS

(a) Using a piston ring expander, remove the 2 compression rings.

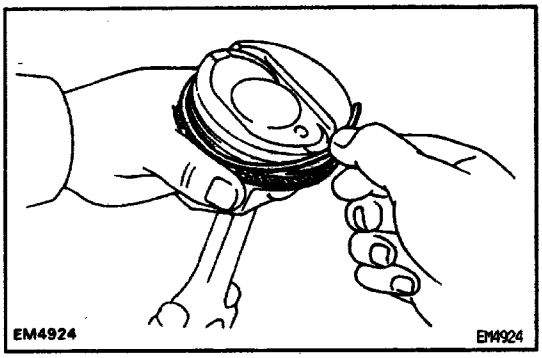

(b) Remove the 2 side rails and oil ring by hand.
HINT: Arrange the piston rings in correct order only.

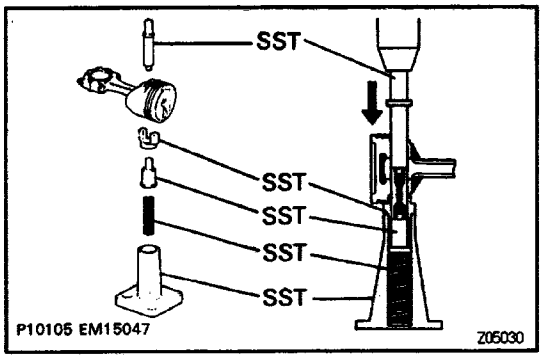

3. DISCONNECT CONNECTING ROD FROM PISTON
Using SST and a press, press out the piston pin from the piston. Remove the connecting rod.
SST 09221–25024 (09221–00020, 09221– 00030, 09221–00181, 09221– 00190, 09221 –00200)

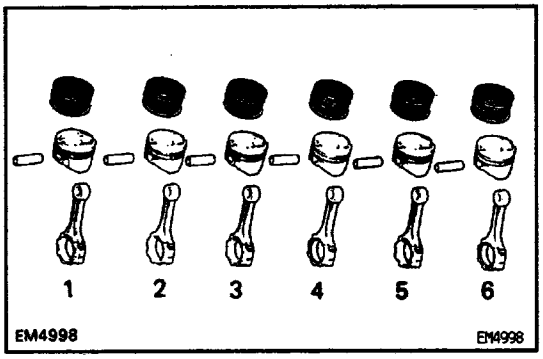

HINT:
- The piston and pin are a matched set.
- Arrange the pistons, pins, rings, connecting rods and bearings in correct order.

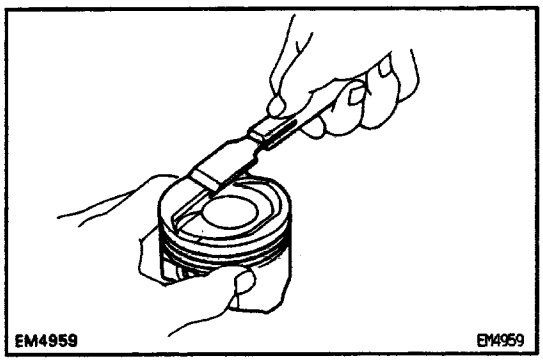

PISTON AND CONNECTING ROD INSPECTION

1. CLEAN PISTON

(a) Using a gasket scraper, remove the carbon from the piston top.

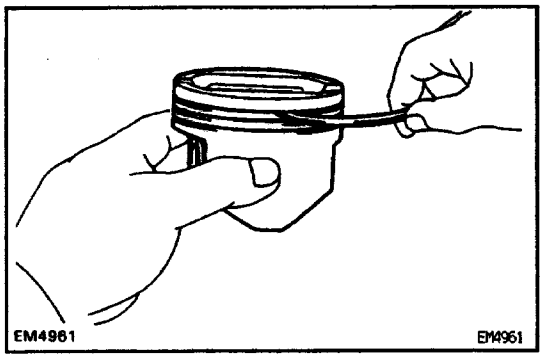

(b) Using a groove cleaning tool or broken ring, clean the piston ring grooves.

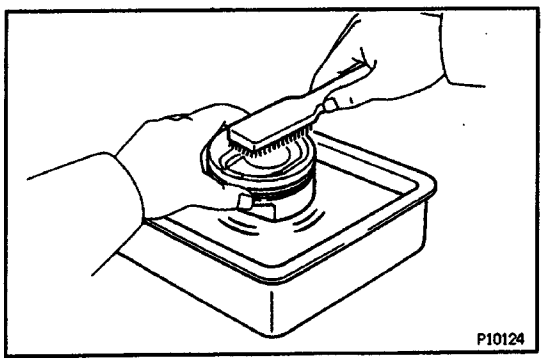

(c) Using solvent and a brush, thoroughly clean the piston.

NOTICE: Do not use a wire brush.

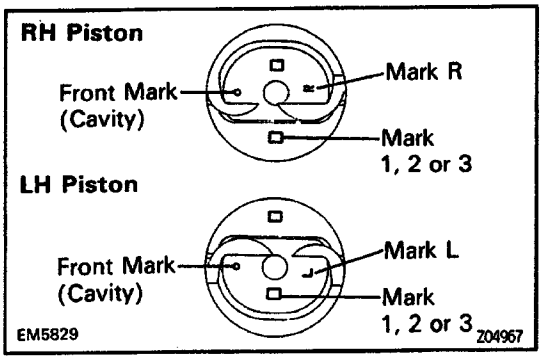

2. INSPECT PISTON

A. Inspect piston oil clearance

HINT: There are 3 sizes of the standard piston diameter, marked ”1, ”2” and ”3” accordingly. The mark is stamped on the piston top.

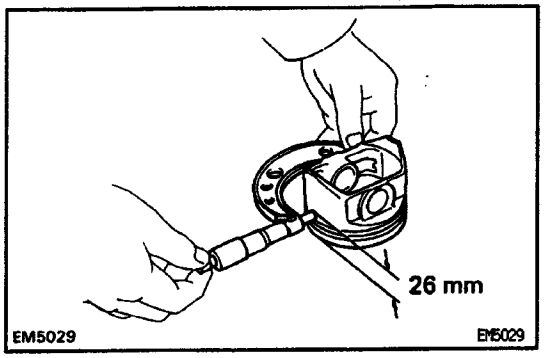

(a) Using a micrometer, measure the piston diameter at right angles to the piston pin center line, 26 mm (1.02 in.) from the piston head.

Piston diameter:

STD

Mark ’1’

87.360 – 87.370 mm (3.4394 – 3.4398 in.)

Mark ’2’

87.370 – 87.380 mm (3.4398 – 3.4.402 in.)

Mark ’3’

87.380 – 87.390 mm (3.4402 – 3.4405 in.)

O/S 0.50

87.860 – 87.890 mm (3.4590 – 3.4602 in.)

(b) Measure the cylinder bore diameter in the thrust directions. (See step 4 on page EG2–107)

(c) Subtract the piston diameter measurement from the cylinder bore diameter measurement.

Standard oil clearance:

0.130 – 0.150 mm (0.0051 – 0.0059 in.)

Maximum oil clearance:

0.17 mm (0.0067 in.)

If the oil clearance is greater than maximum, replace all the 6 pistons. If necessary, rebore all the 6 cylinders or replace the cylinder block.

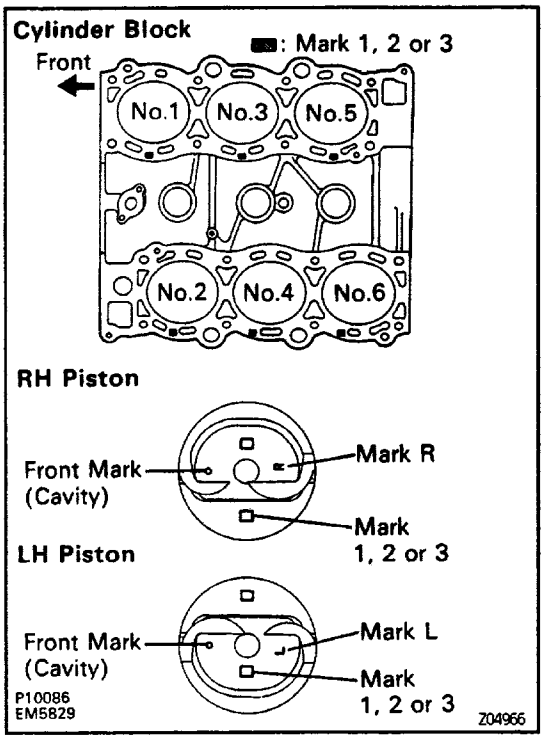

HINT (Use new cylinder block):

- Use a piston with the same number mark as the cylinder diameter marked on the cylinder block.
- The shape of the piston varies for the RH and LH banks. The RH piston is marked with ”R”, the LH piston with ”L”.

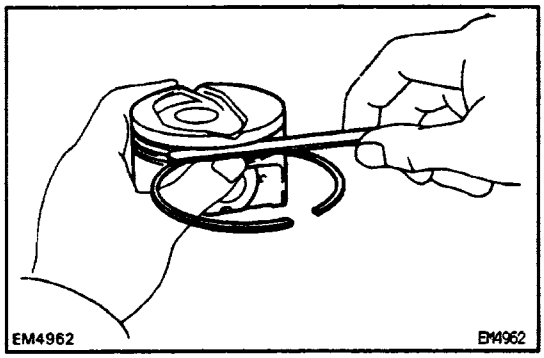

B. Inspect piston ring groove clearance

Using a feeler gauge, measure the clearance between new piston ring and the wall of the piston ring groove.

Standard ring groove clearance:

No.1

0.020 – 0.060 mm (0.0008 – 0.0024 in.)

No.2

0.030 – 0.070 mm (0.0012 – 0.0028 in.)

Maximum ring groove clearance:

0.20 mm (0.0079 in.)

If the clearance is greater than maximum, replace the piston.

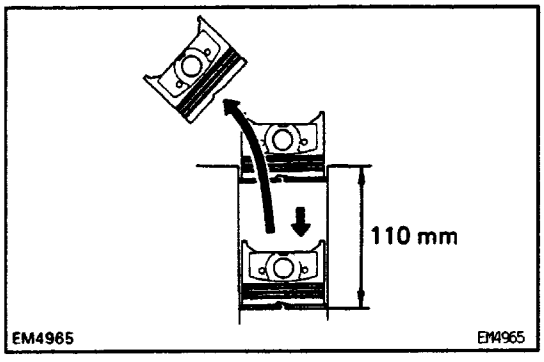

C. Inspect piston ring end gap

(a) Insert the piston ring into the cylinder bore.

(b) Using a piston, push the piston ring a little beyond the bottom of the ring travel, 110 mm (4.33 in.) from the top of the cylinder block.

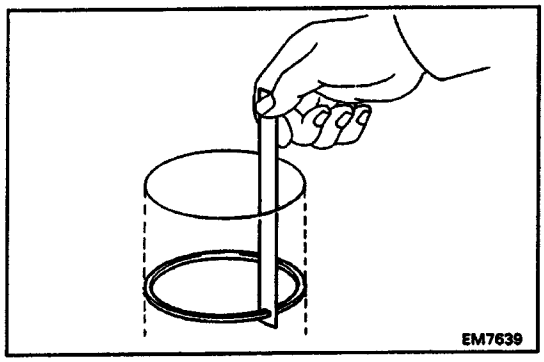

(c) Using a feeler gauge, measure the ring end gap.

Standard ring end gap:

No.1

0.280 – 0.500 mm (0.0110 – 0.0197 in.)

No.2

0.380 – 0.600 mm (0.0150 – 0.0236 in.)

Oil (Side rail)

0.150 – 0.500 mm (0.0059 – 0.0197 in.)

Maximum ring end gap:

No.1

1.10 mm (0.0433 in.)

No.2

1.20 mm (0.0472 in.)

Oil (Side tail)

1.10 mm (0.0433 in.)

If the end gap is greater than maximum, replace the piston ring. If the end gap is greater than maximum, even with a new piston ring, rebore all the6 cylinders or replace the cylinder block.

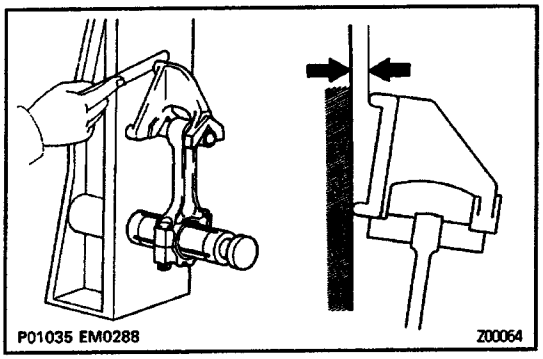

3. INSPECT CONNECTING ROD

A. Inspect connecting rod alignment

Using a rod aligner and feeler gauge, check the connecting rod alignment.

- Check for out–of –alignment.

Maximum out–of–alignment:

0.05 mm (0.0020 in.) per 100 mm (3.94 in.)

If out–of–alignment is greater than maximum, replace the connecting rod assembly.

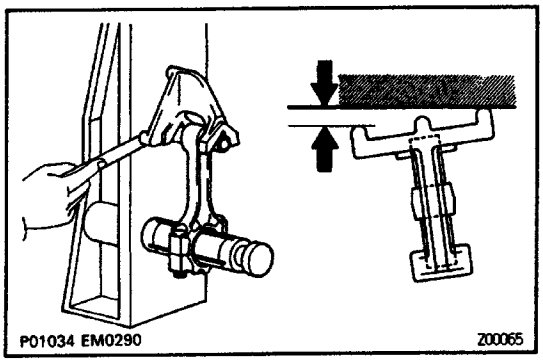

- Check for twist.

Maximum twist:

0.15 mm (0.0059 in.) per 100 mm (3.94 in.)

If twist is greater than maximum, replace the connecting rod assembly.

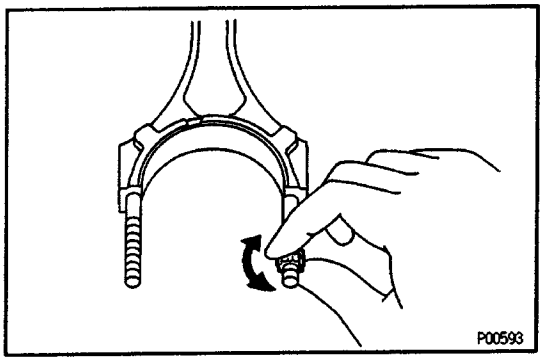

B. Inspect connecting rod bolts

(a) Install the cap nut to the connecting rod bolt. Check that the rod cap nut can be turned easily by hand to the end of the thread.

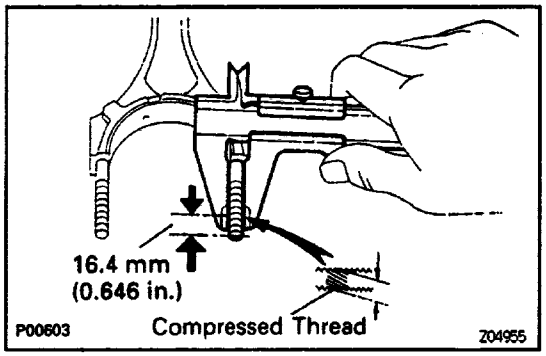

(b) If the cap nut cannot be turned easily, measure the outer diameter of the compressed thread with a vernier caliper.

Standard outer diameter:

7.860 – 8.000 mm (0.3094 – 0.3150 in.)

Minimum outer diameter:

7.60 mm (0.2992 in.)

HINT: If the location of this area cannot be judged by visual inspection, measure the outer diameter at the location shown in the illustration.

If the outer diameter is less than minimum, replace the connecting rod and rod cap nut as a set.

CYLINDER BORING

HINT:

- Bore all the 6 cylinders for the oversized piston outside diameter.
- Replace all the piston rings with ones to match the oversized pistons.

1. KEEP OVERSIZED PISTONS

Oversized piston diameter:

O/S 0.50

87.860 – 87.890 mm (3.4590 – 3.4602 in.)

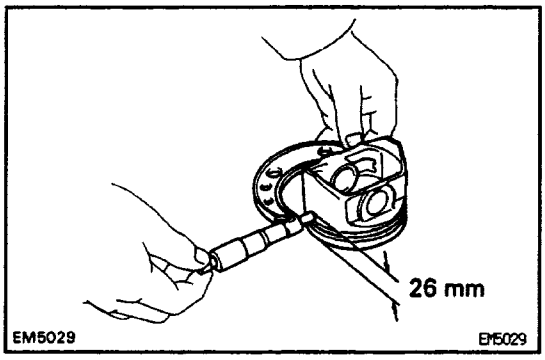

2. CALCULATE AMOUNT TO BORE CYLINDERS

(a) Using a micrometer, measure the piston diameter at right angles to the piston pin center line. 26 mm (1.02 in.) from the piston head.

(b) Calculate the amount of each cylinder is to be rebored as follows:

Size to be rebored = P + C – H

P = Piston diameter

C = Piston oil clearance

0.130 – 0.150 mm (0.0051 – 0.0059 in.)

H = Allowance for honing

0.02 mm (0.0008 in.) or less

3. BORE AND HONE CYLINDER TO CALCULATED DIMENSIONS

Maximum honing:

0.02 mm (0.0048 in.)

NOTICE: Excess honing will destroy the finished roundness.

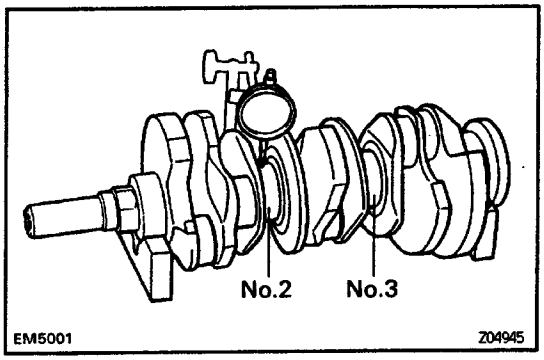

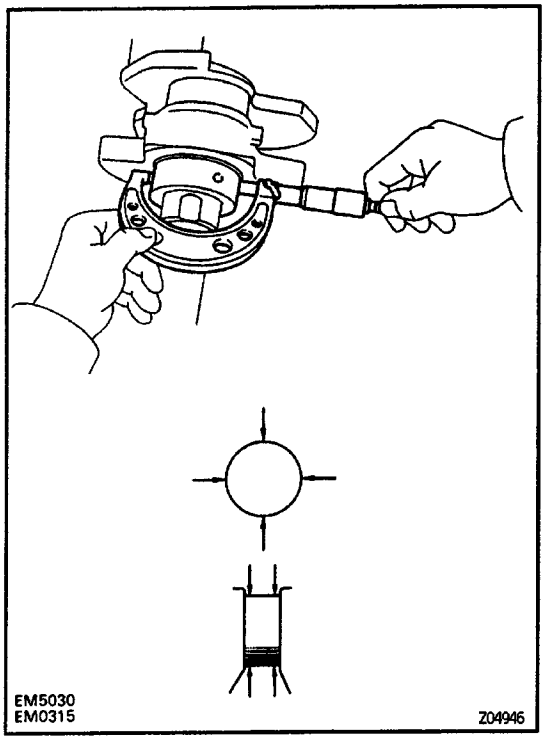

CRANKSHAFT INSPECTION AND REPAIR

1. INSPECT CRANKSHAFT FOR RUNOUT

(a) Place the crankshaft on V–blocks.

(b) Using a dial indicator, measure the circle runout at the No.2 and No.3 journals.

Maximum circle runout:

0.06 mm (0.0024 in.)

If the circle runout is greater than maximum, replace the crankshaft.

2. INSPECT MAIN JOURNALS AND CRANK PINS

(a) Using a micrometer, measure the diameter of each main journal and crank pin.

Main journal diameter:

STD

63.985 –64.000 mm (2.5191 – 2.5197 in.)

U/S 0.25

63.745 –63.755 mm (2.5096 – 2.5100 in.)

U/S 0.50

63.495 –63.505 mm (2.4998 – 2.5002 in.)

Crank pin diameter:

STD

54.987 – 55.000 mm (2.1648 – 2.1654 in.)

U/S 0.25

54.745 – 54.755 mm (2.1553 – 2.1557 in.)

U/S 0.50

54.495 – 54.505 mm (2.1455 – 2.1459 in.)

If the diameter is not as specified, check the oil clearance. (See 3 or 6 in cylinder block disassembly)

(b) Check each main journal and crank pin for taper and out–of–round as shown.

Maximum taper and out–of–round:

0.02 mm (0.0008 in.)

If the taper or out–of–round is greater than maximum, grind or replace the crankshaft.

3. IF NECESSARY, GRIND AND HONE MAIN JOURNALS AND/OR CRANK PINS

Grind and hone the main journals and/or crank pins to the finished undersized diameter (See procedure step 2).

Install new main journal and/or crank pin undersized bearings.

CRANKSHAFT OIL SEALS REPLACEMENT

HINT: There are 2 methods (A and B) to replace the oil seal which are as follows:

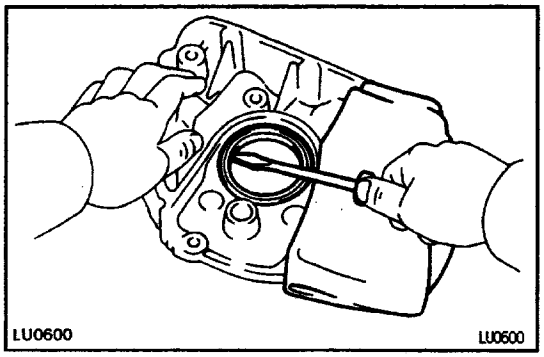

1. REPLACE CRANKSHAFT FRONT OIL SEAL

A. If oil pump is removed from cylinder block:

(a) Using a screwdriver, pry out the oil seal.

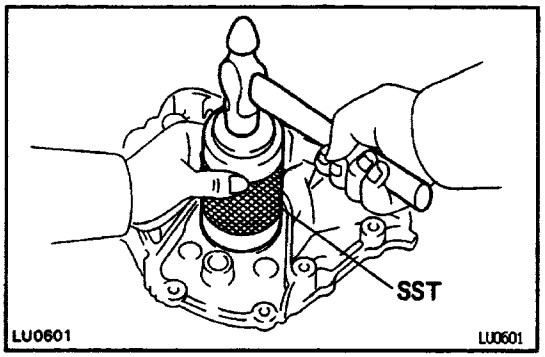

(b) Using SST and a hammer, tap in a new oil seal until its surface is flush with the oil pump body edge.
SST 09309–37010

(c) Apply MP grease to the oil seal lip.

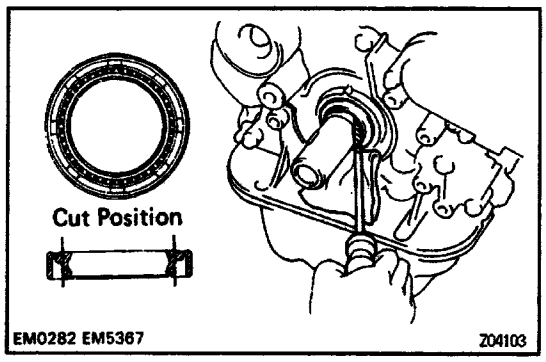

B. If oil pump is installed to the cylinder block:

(a) Using a knife, cut off the oil seal lip.

(b) Using a screwdriver, pry out the oil seal.

NOTICE: Be careful not to damage the crankshaft. Tape the screwdriver tip.

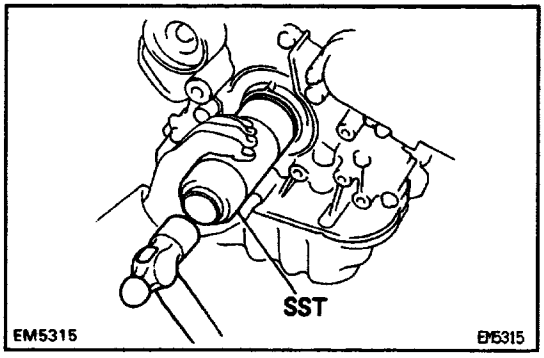

(c) Apply NIP grease to a new oil seal lip.

(d) Using SST and a hammer, tap in the oil seal until its surface is flush with the oil pump body edge.
SST 09306–37010

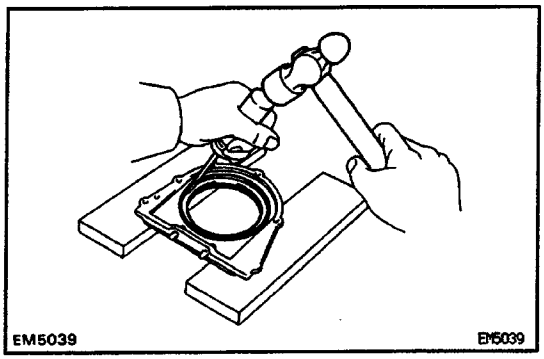

2. REPLACE CRANKSHAFT REAR OIL SEAL

A. If rear oil seal retainer is removed from cylinder block:

(a) Using a screwdriver and hammer, tap out the oil seal.

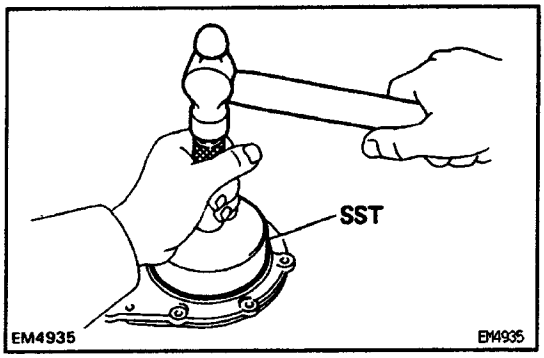

(b) Using SST and a hammer, tap in a new oil seal until its surface is flush with the rear oil seal retainer edge.
SST 09223–15030, 09608–35014 (09608–06020)

(c) Apply MP grease to the oil seal lip.

B. If rear oil seal retainer is installed to cylinder block:

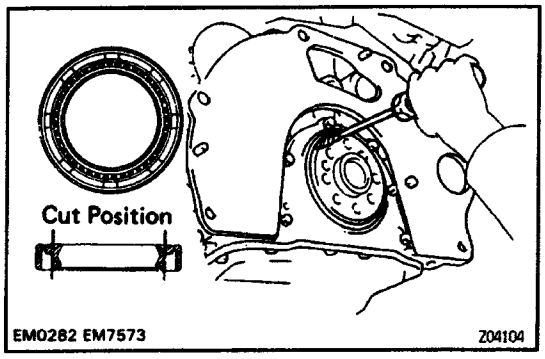

(a) Using a knife, cut oft the oil seal lip.

(b) Using a screwdriver, pry out the oil seal.

NOTICE: Be careful not to damage the crankshaft. Tape the screwdriver tip.

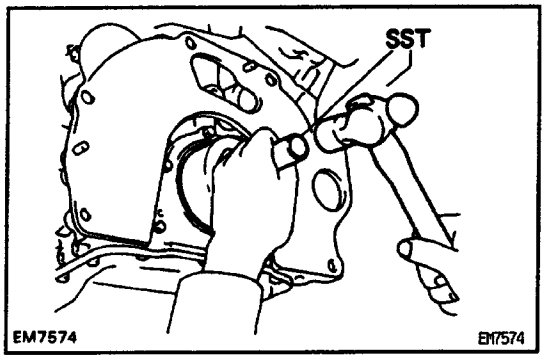

(c) Apply MP grease to a new oil seal lip.

(d) Using SST and a hammer, tap in the oil seal until its surface is flush with the rear oil seal retainer edge.
SST 09223–15030, 09608–35014 (09608–06020)

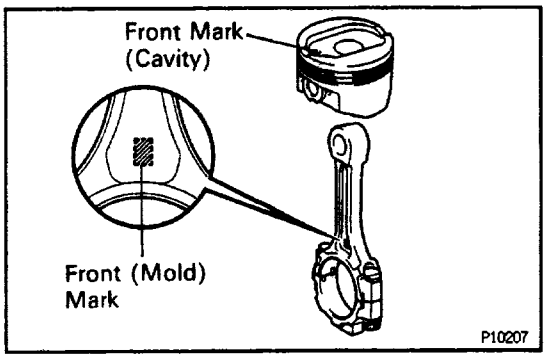

PISTONS AND CONNECTING RODS ASSEMBLY

1. ASSEMBLE PISTON AND CONNECTING ROD

(a) Coat the piston pin and piston pin holes with engine oil.

(b) Align the front marks of the piston and connecting rod.

Connecting rod front (mold) mark:

A1, B6. 1 B, 8A, C3 or etc.

(c) Using SST, press in the piston pin.

SST 09221–25024 (09221–00020, 09221–00030, 09221–00181, 09221–00190, 09221–00200)

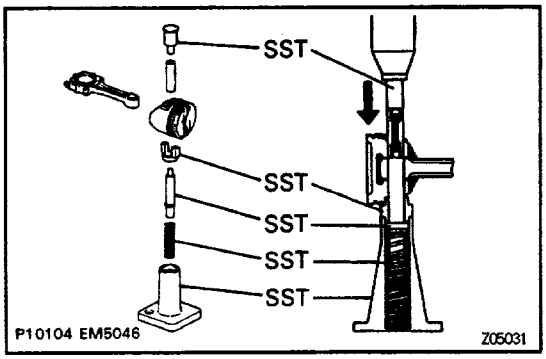

2. INSTALL PISTON RINGS

(a) Install the oil expander and 2 side rails by hand.

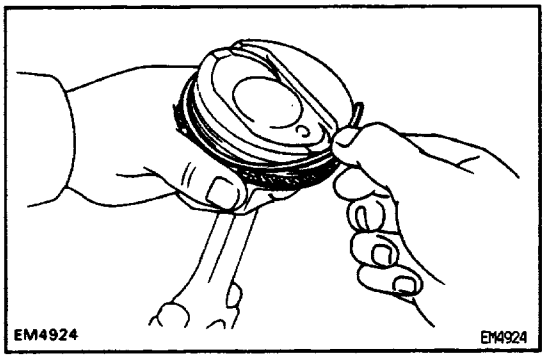

(b) Using a piston ring expander, install the 2 compression rings with the code marks facing upward.

Code mark:

No.1

1R or T

No.2

2R or T2

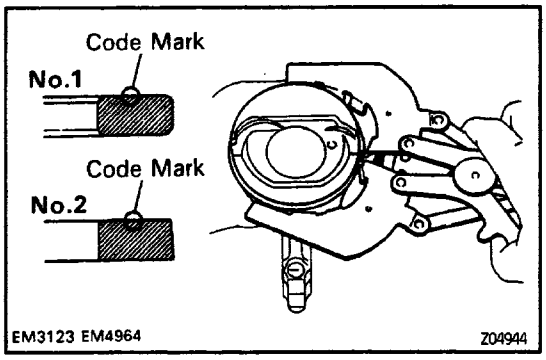

(c) Position the piston rings so that the ring ends are as shown.

NOTICE: Do not align the ring ends.

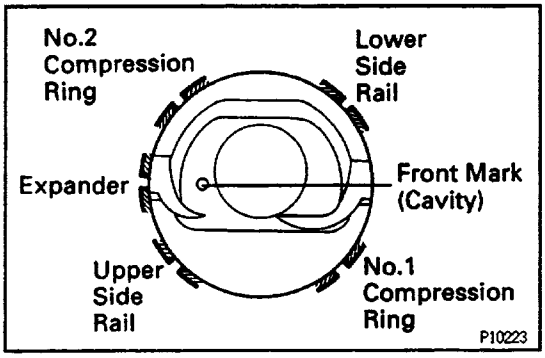

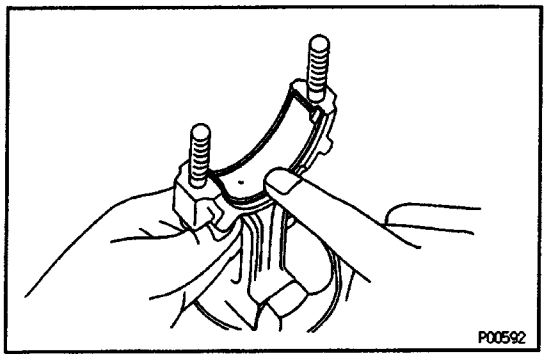

3. INSTALL BEARINGS

(a) Align the bearing claw with the groove of the connecting rod or connecting cap.

(b) Install the bearings in the connecting rod and connecting rod cap.

CYLINDER BLOCK ASSEMBLY

(See Components for Removal and Installation)

HINT:

- Thoroughly clean all parts to be assembled.
- Before installing the parts, apply new engine oil to all sliding and rotating surfaces.
- Replace all gaskets, 0–rings and oil seals with new parts.

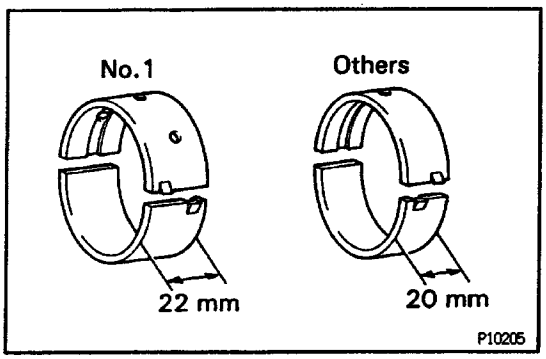

1. INSTALL MAIN BEARINGS

HINT:

- Main bearings come in widths of 20 mm (0.79 in.) and 22 mm (0.87 in.). Install the 22 mm (0.87 in.) bearings in the No.1 cylinder block journal position with the main bearing caps. Install the 20 mm (0.79 in.) bearings in the other positions.
- Upper bearings have oil holes lower bearings do not.

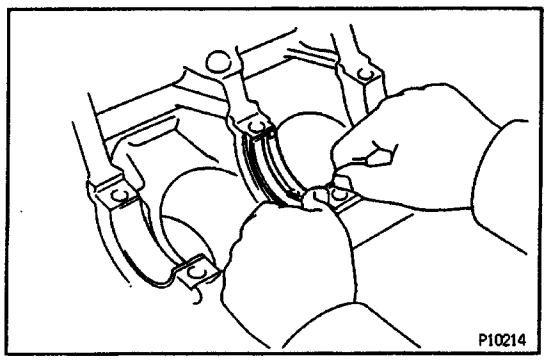

(a) Align the bearing claw with the claw groove of the main bearing cap or cylinder block.

(b) Install the bearings in the cylinder block and main bearing cap.

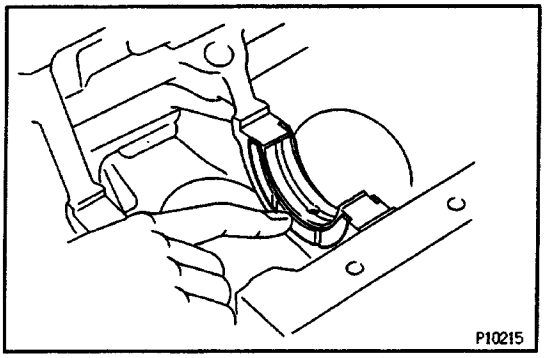

2. INSTALL UPPER THRUST WASHERS

Install the thrust washers under the No.2 journal position of the cylinder block with the oil grooves facing outward.

3. PLACE CRANKSHAFT ON CYLINDER BLOCK

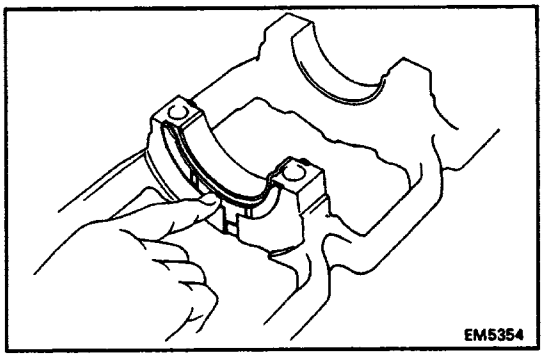

4. INSTALL MAIN BEARING CAP AND LOWER THRUST WASHERS

A. Place main bearing cap and lower thrust washers on cylinder block

(a) Install the thrust washers on the No.2 journal position of the bearing cap with the grooves facing outward.

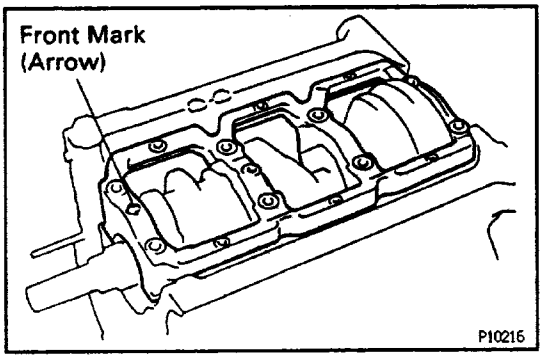

(b) Install the main bearing cap with the front mark facing forward.

B. Install main bearing cap bolts

HINT:

The main bearing cap bolts are tightened in 2

- progressive steps (steps (b) and (d)).
- If any main bearing cap bolt is broken or deformed, replace it.

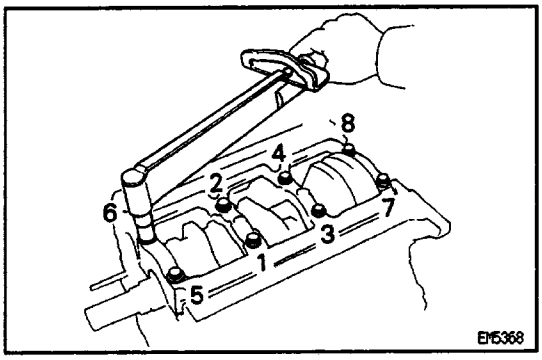

(a) Apply a light coat of engine oil on the threads and under the heads of the main bearing cap bolts.

(b) Install and uniformly tighten the 8 main bearing cap bolts in several passes, in the sequence shown.

Torque: 81 N–m (625 kgf–cm, 45 ft–lbf)

If any one of the main bearing cap bolts does not meet the torque specification, replace the cap bolt.

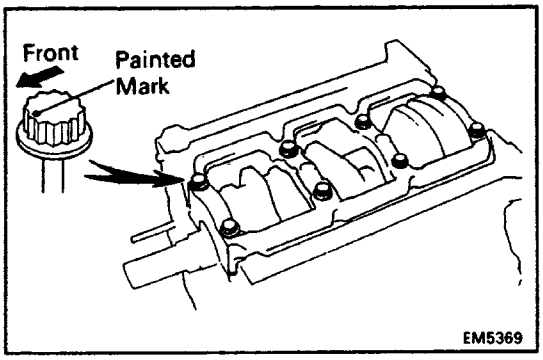

(c) Mark the front of the main bearing cap bolt with paint.

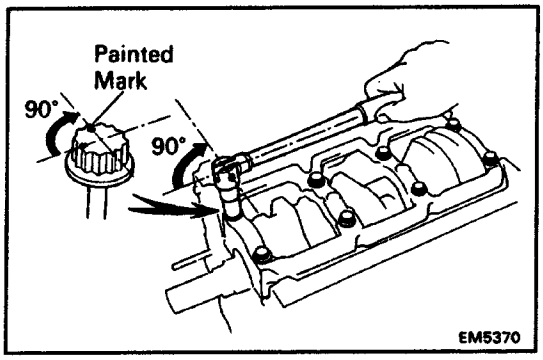

(d) Retighten the main bearing cap bolts by 90° in the numerical order shown.
(e) Check that the painted mark is now at a 90° angle to the front.
(f) Check that the crankshaft turns smoothly.

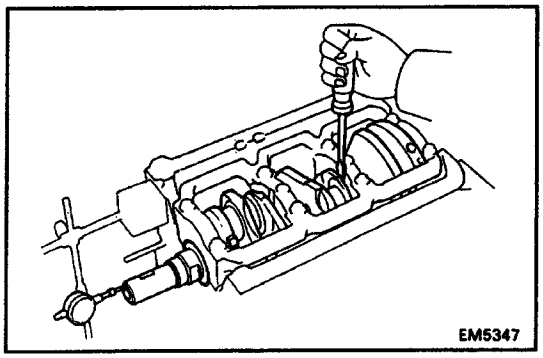

5. CHECK CRANKSHAFT THRUST CLEARANCE

Using a dial indicator, measure the thrust clearance while prying the crankshaft back and forth with a screwdriver.

Standard thrust clearance:

0.020 – 0.220 mm (0.0008 – 0.0087 in.)

Maximum thrust clearance:

0.30 mm (0.0118 in.)

If the thrust clearance is greater than maximum, replace the thrust washers as a set.

Thrust washer thickness:

2.440 – 2.490 mm (0.0981 – 0.0980 in.)

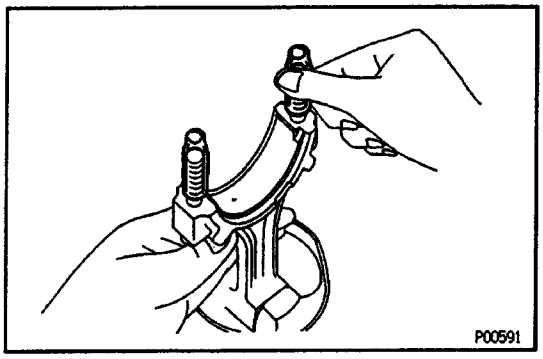

6. INSTALL PISTON AND CONNECTING ROD ASSEMBLIES

(a) Cover the connecting rod bolts with a short piece of hose to protect the crankshaft from damage.

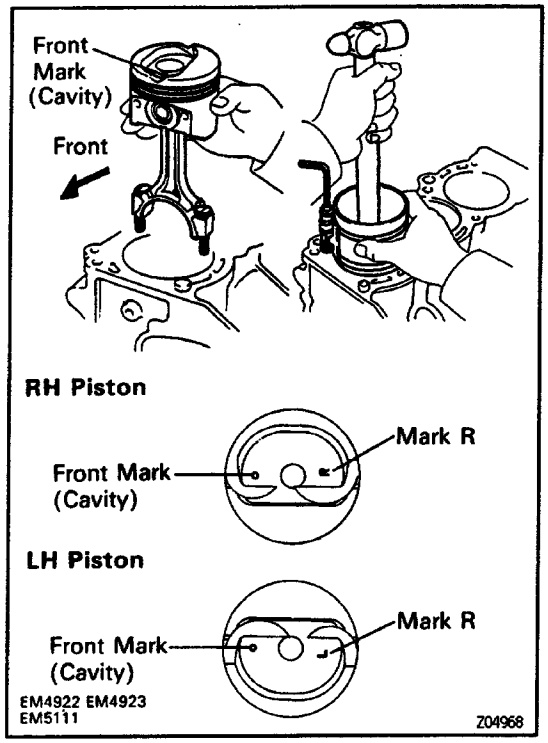

(b) Using a piston ring compressor, push the correctly numbered piston and connecting rod assemblies into each cylinder with the front mark of the piston facing forward.

NOTICE: The shape of the piston varies for the RH and LH banks. The RH piston is marked with 'R', The LH piston with 'L'.

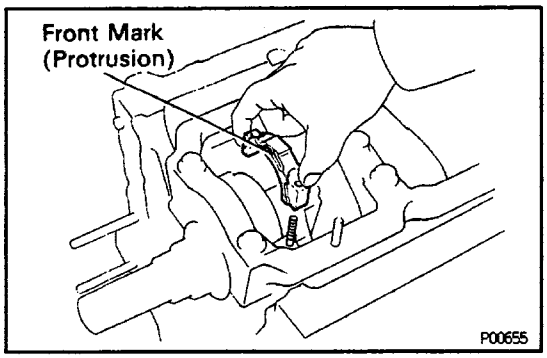

7. INSTALL CONNECTING ROD CAPS

A. Place connecting rod cap on connecting rod

(a) Match the numbered connecting rod cap with the connecting rod.

(b) Install the connecting rod cap with the front mark facing forward.

B. Install connecting rod cap nuts

HINT:

The connecting rod cap nuts are tightened in 2

- progressive steps (steps (b) and (d)).
- If any connecting rod bolt is broken or deformed, replace it.

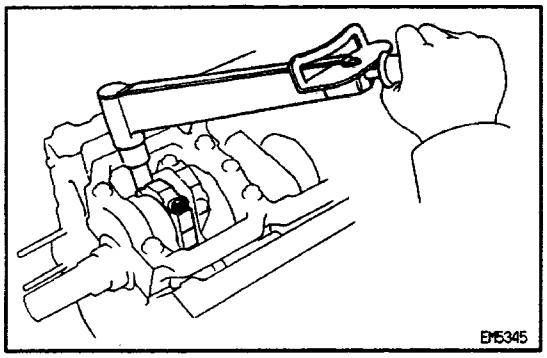

(a) Apply a light of engine oil on the threads and under the nuts of the connecting rod cap.

(b) Install and alternately tighten the nuts of the connecting rod cap in several passes.

Torque: 25 N–m (250 kgf–cm, 18 ft–lbf)

If any one of the connecting rod cap nuts does not meet the torque specification, replace the cap nut.

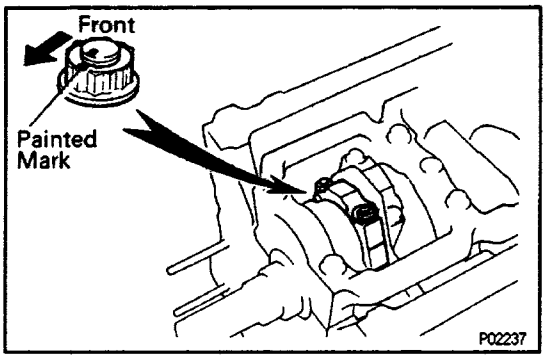

(c) Mark the front of the connecting rod cap nut and bolt with paint.

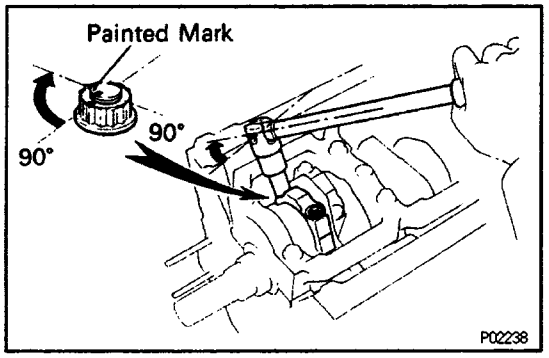

(d) Retighten the connecting rod cap nuts 90° as shown.

(e) Check that the painted mark is now at a 90° angle to the front.

(f) Check that the crankshaft turns smoothly.

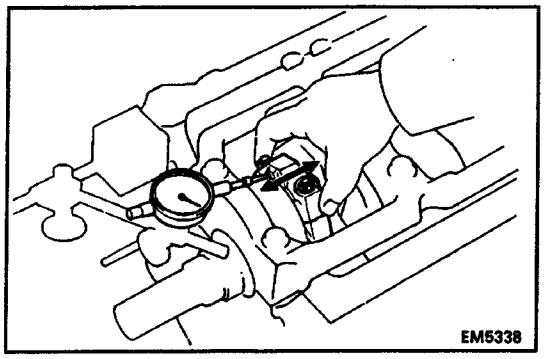

8. CHECK CONNECTING ROD THRUST CLEARANCE

Using a dial indicator, measure the thrust clearance while moving the connecting rod back and forth.

Standard thrust clearance:

0.150 – 0.330 mm (0.0059 – 0.0130 in.)

Maximum thrust clearance:

0.38 mm (0.0150 in.)

If the thrust clearance is greater than maximum, replace the connecting rod assembly. If necessary, replace the crankshaft.

9. INSTALL REAR OIL SEAL RETAINER

(a) Remove any old packing (FIPG) material and be careful not to drop any oil on the contact surfaces of the retainer and cylinder block.

- Using a razor blade and gasket scraper, remove all the old packing (FIPG) material from the gasket surfaces and sealing groove.
- Thoroughly clean all components to remove all the loose material.
- Using a non–residue solvent, clean both sealing surfaces.

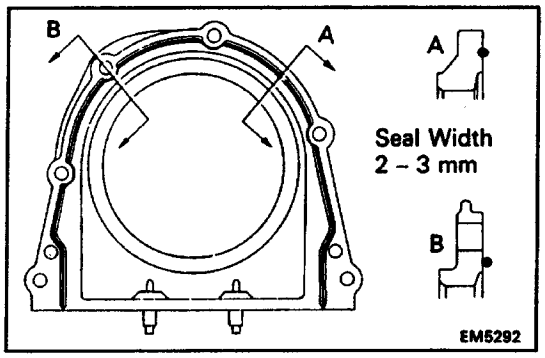

(b) Apply seal packing to the oil seal retainer as shown in the illustration.

Seal packing:

Part No.08826 – 00080 or equivalent

- Install a nozzle that has been cut to a 2 – 3 mm (0.08 – 0.12 in.) opening.
- Parts must be assembled within 5 minutes of application. Otherwise the material must be removed and reapplied.
- Immediately remove nozzle from the tube and reinstall cap.

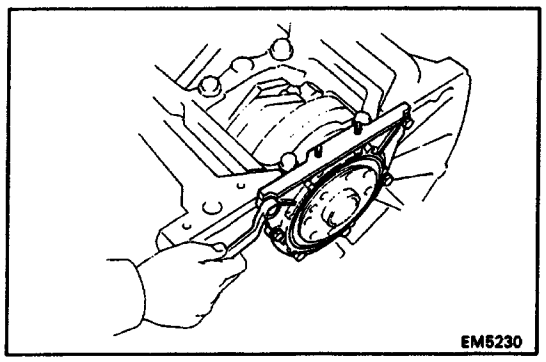

(c) Install the oil seal retainer with the 6 bolts.

Torque: 7.8 N–m (80 kgf–cm, 69 in.–lbf)

AFTER ASSEMBLY

1. INSTALL OIL PUMP

(a) Remove any old packing (FIPG) material and be careful not to drop any oil on the contact surfaces of the oil pump and cylinder block.

Using a razor blade and gasket scraper, remove all the old packing (FIPG) material from the gasket surfaces and sealing groove.

Thoroughly clean all components to remove all the loose material.

Using a non–residue solvent, clean both sealing surfaces.

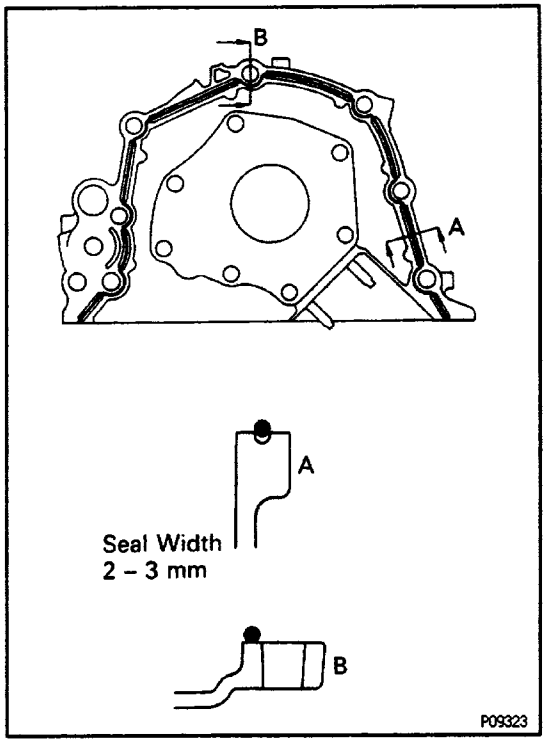

(b) Apply seal packing to the oil pump as shown in the illustration.

Seal packing:

Part No. 08826–00080 or equivalent

NOTICE: Avoid applying an excessive amount to the surface. Be particularly careful near oil passage.

- Install a nozzle that has been cut to a 2 – 3 mm (0.08 – 0.12 in.) opening.
- Parts must be assembled within 5 minutes of application. Otherwise the material must be removed and reapplied.
- Immediately remove nozzle from the tube and reinstall cap.

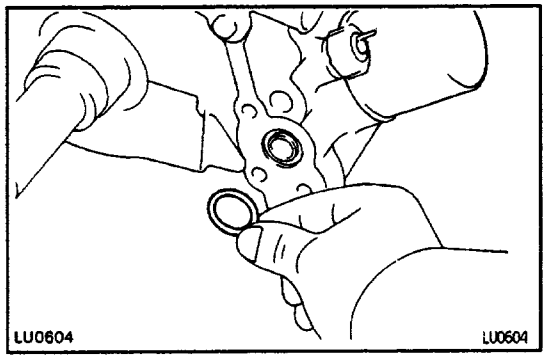

(c) Install a new O–ring to the cylinder block.

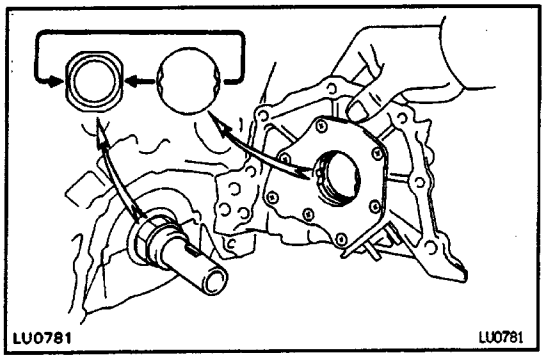

(d) Engage the spline teeth of the oil pump drive gear with the large teeth of the crankshaft, and slide the oil pump on the crankshaft.

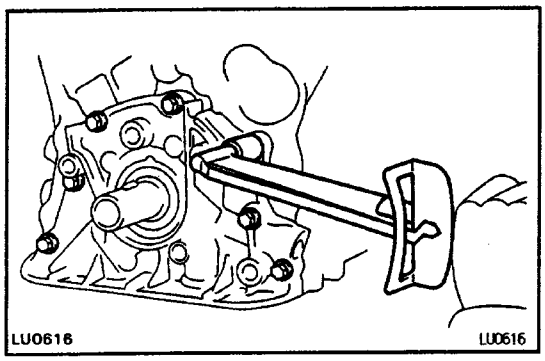

(e) Install the oil pump with the 8 bolts. Uniformly tighten the bolts in several passes.
Torque: 20 N–m (200 kgf–cm, 14 ft–lbf)

2. INSTALL OIL PAN BAFFLE PLATE

(a) Remove any old packing (FIPG) material and be careful not to drop any oil on the contact surfaces of the baffle plate and cylinder block.

- Using a razor blade and gasket scraper, remove all the old packing (FIPG) material from the gasket surfaces and sealing groove.
- Thoroughly clean all components to remove all the loose material.
- Using a non–residue solvent, clean both sealing surfaces.

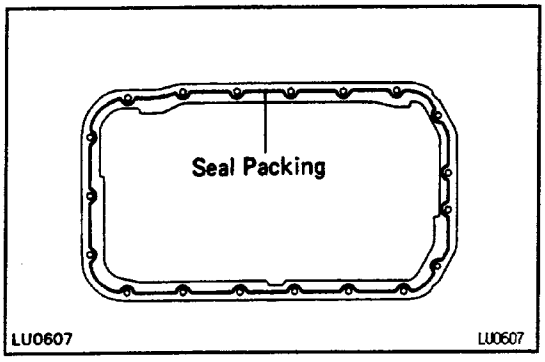

(b) Apply seal packing to the baffle plate as shown in the illustration.
Seal packing:
Part No. 08826–00080 or equivalent

- Install a nozzle that has been cut to a 3 – 4 mm (0. 12 – 0.16 in.) opening.
- Parts must be assembled within 5 minutes of application. Otherwise the material must be removed and reapplied.
- Immediately remove nozzle from the tube and reinstall cap.

(c) Attach the baffle plate to the cylinder block.

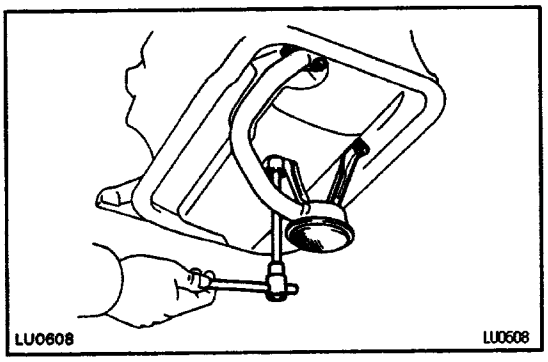

3. INSTALL OIL STRAINER

Install a new gasket and the oil strainer with the 2 nuts and 2 bolts.

Torque: 6.9 N–m (70 kgf–cm, 61 in.–lbf)

4. INSTALL OIL PAN

(a) Remove any old packing (FIPG) material and be careful not to drop any oil on the contact surfaces of the oil pan and baffle plate.

- Using a razor blade and gasket scraper, remove all the old packing (FIPG) material from the gasket surfaces and sealing groove.
- Thoroughly clean all components to remove all the loose material.
- Using a non–residue solvent, clean both sealing surfaces.

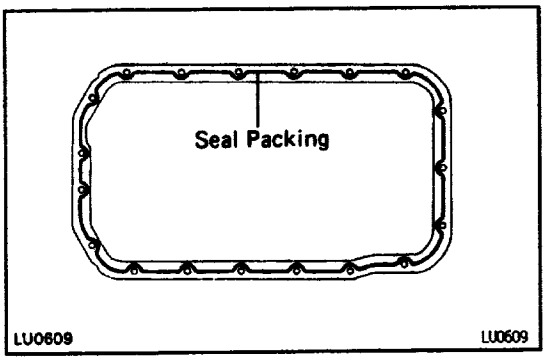

(b) Apply seal packing to the oil pan as shown in the illustration.

Seal packing:

Part No. 08826–00080 or equivalent

- Install a nozzle that has been cut to a 3 – 4 mm (0.12 – 0.16 in.) opening.
- Parts must be assembled within 5 minutes of application. Otherwise the material must be removed and reapplied.
- Immediately remove nozzle from the tube and reinstall cap.

(c) Install the oil pan with the 2 nuts and 17 bolts.

Torque: 5.9 N–m (60 kgf–cm. 52 in.–lbf)

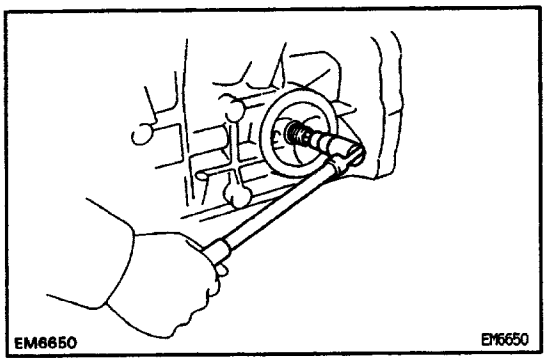

5. INSTALL OIL FILTER UNION

Using a 12 mm hexagon wrench, install and torque the oil filter union.

Torque: 25 N–m (250 kgf–cm, 18 ft–lbf)

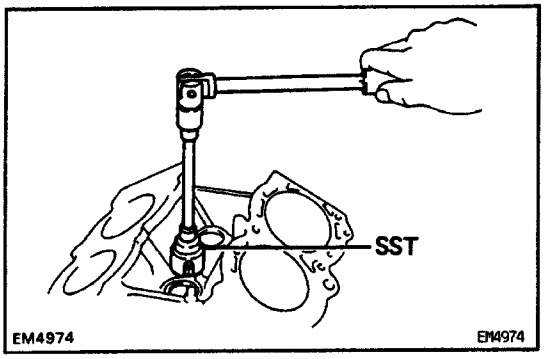

6. INSTALL KNOCK SENSOR

Using SST, install the knock sensor.
SST 09817–16011

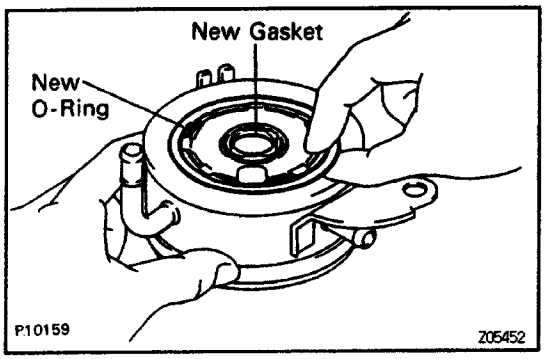

7. INSTALL OIL COOLER

(a) Install new O–ring and gasket to the oil cooler.
(b) Apply a light coat of engine oil on the threads of the relief valve.

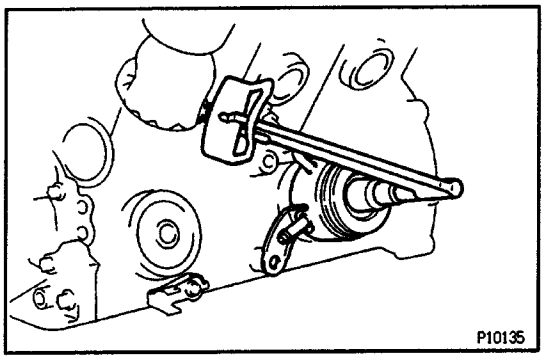

(c) Temporarily install the seal washer, oil cooler and seal washer with the relief valve and bolt.
(d) Tighten the relief valve.
Torque: 59 N–m (600 kgf–cm, 43 ft–lbf)
(e) Install the bolt.
Torque: 39 N–m (400 kgf–cm, 29 ft–lbf)

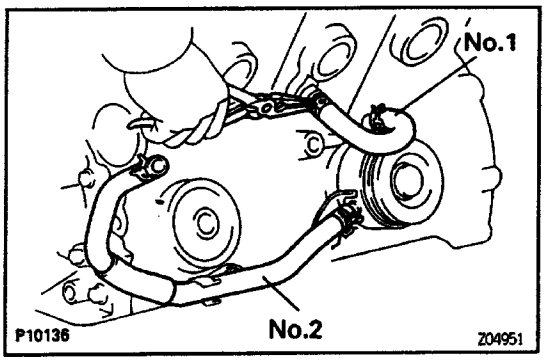

(f) Install the No.1 and No.2 oil cooler hoses.

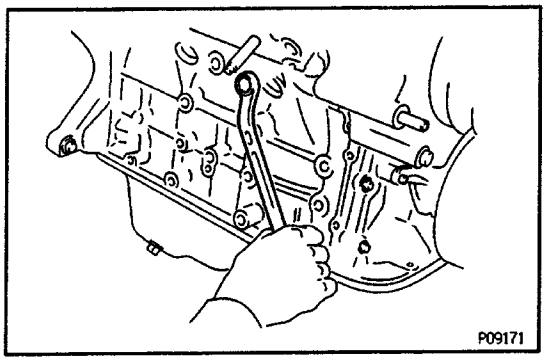

8. INSTALL ENGINE COOLANT DRAIN PLUGS

Torque: 29 N–m (300 kgf–cm, 22 ft–lbf)

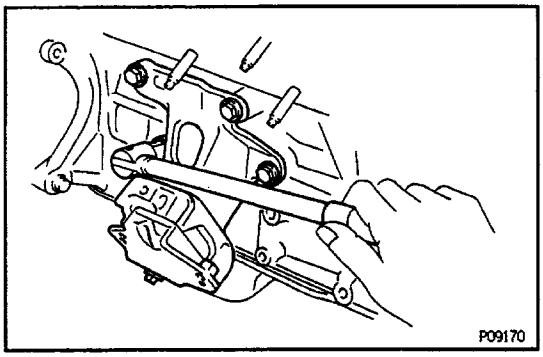

9. INSTALL LH AND RH ENGINE MOUNTING BRACKETS

Install the mounting bracket with the 4 bolts. Install the 2 mounting brackets.

Torque: 39 N–m (400 kgf–cm, 29 ft–lbf)

10. INSTALL OIL FILTER

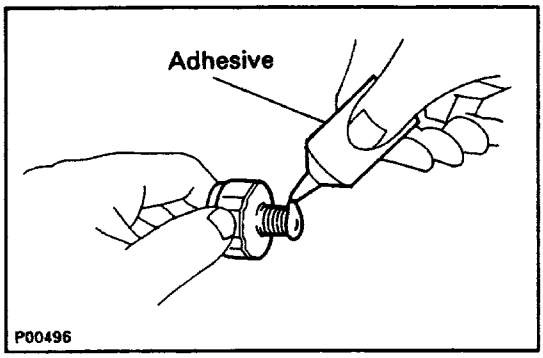

11. INSTALL OIL PRESSURE SENDER GAUGE

(a) Apply adhesive to 2 or 3 threads.

Adhesive:

Part No.08833–00080. THREE BOND 1344, LOCTITE 242 or equivalent

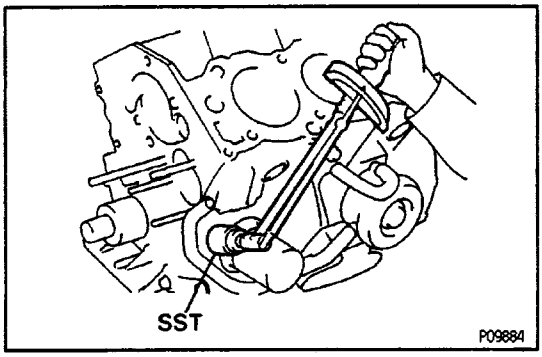

(b) Using SST, install the oil pressure sender gauge.

SST 09816–30010

Torque: 15 N–m (150 kgf–cm, 11 ft–lbf)

12. INSTALL GENERATOR ADJUSTING BAR

13. INSTALL WATER PUMP

(a) Remove any old packing (FIPG) material and be careful not to drop any oil on the contact surfaces of the water pump and cylinder block.

- Using a razor blade and gasket scraper, remove all the old packing (FIPG) material from the gasket surfaces and sealing groove.
- Thoroughly clean all components to remove all the loose material.
- Using a non–residue solvent, clean both sealing surfaces.

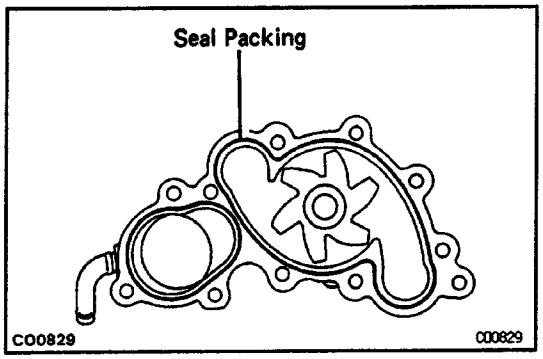

(b) Apply seal packing to the sealing groove of the water pump as shown in the illustration.

Seal packing:

Part No. 08826–00100 or equivalent

- Install a nozzle that has been cut to a 2 – 3 mm (0.08 – 0.12 in.) opening.
- Parts must be assembled within 5 minutes of application. Otherwise the material must be removed and reapplied.
- Immediately remove nozzle from the tube and reinstall cap.

(c) Install the water pump with the 7 bolts.

Torque:

Bolt (A): 18 N–m (185 kgf–cm, 13 ft–lbf)

Bolt (D): 20 N–m (200 kgf–cm. 14 ft–lbf)

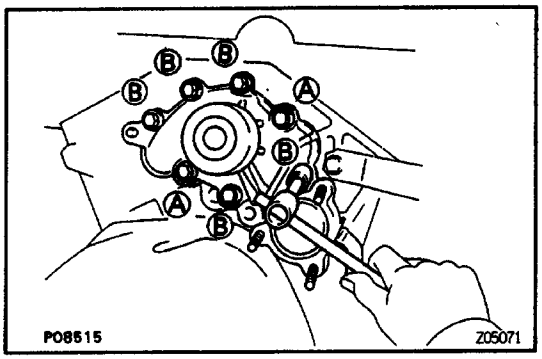

14. INSTALL THERMOSTAT AND WATER INLET

16. INSTALL NO.1 WATER BYPASS PIPE

(a) Remove any old packing (FIPG) material and be careful not to drop any oil on the contact surfaces of the water bypass pipe and cylinder block.

- Using a razor blade and gasket scraper, remove all the old packing (FIPG) material from the gasket surfaces and sealing groove.
- Thoroughly clean all components to remove all the loose material.
- Using a non–residue solvent, clean both sealing surfaces.

(b) Apply seal packing to the sealing groove of the water bypass pipe as shown in the illustration.

Seal packing:

Part No. 08826–00100 or equivalent

- Install a nozzle that has been cut to a 2 – 3 mm (0.08 – 0.12 in.) opening.
- Parts must be assembled within 5 minutes of application. Otherwise the material must be removed and reapplied.
- Immediately remove nozzle from the tube and reinstall cap.

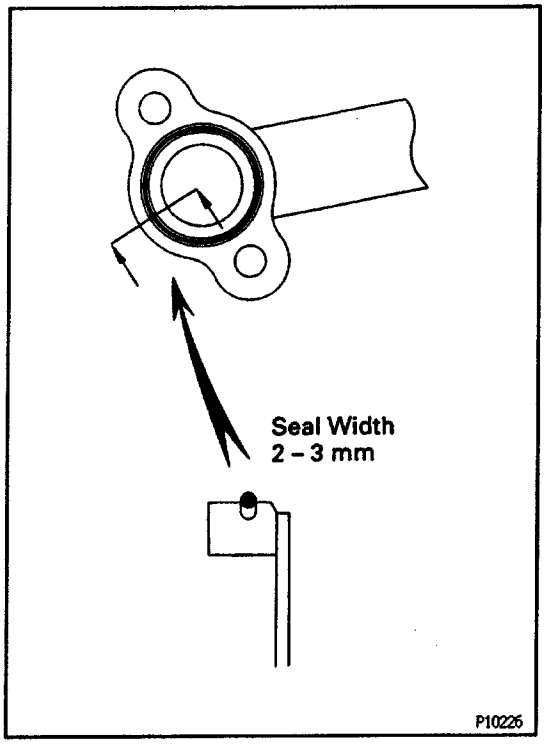

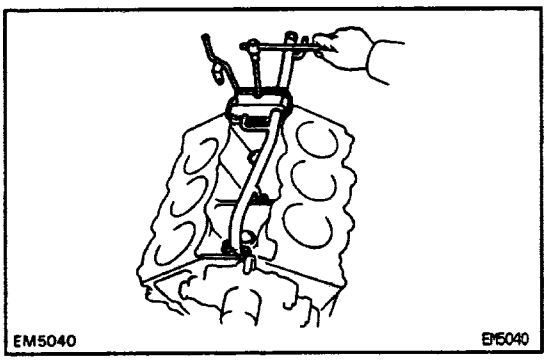

(c) Install the water bypass pipe with the 2 bolts and 2 nuts.

Torque:

Bolt: 4.9 N–m (50 kgf–cm, 43 in.–lbf)

Nut: 6.9 N–m (70 kgf–cm, 61 in.–lbf)

18. INSTALL CYLINDER HEADS

(See steps 4 to 24 in cylinder head installation cylinder head)

17. INSTALL TIMING BELT

(See steps 1 to 17 in timing belt installation timing belt)

18. REMOVE ENGINE STAND

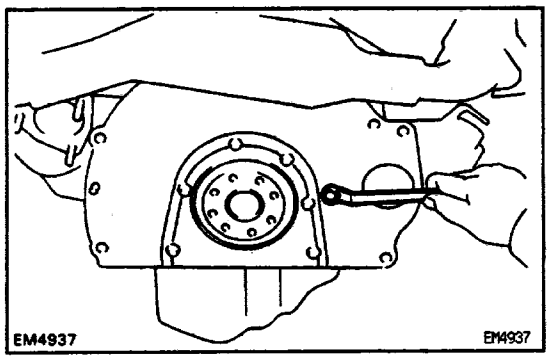

19. INSTALL REAR END PLATE

Install the rear end plate with the bolt.

Torque: 7.4 N–m (75 kgf–cm, 65 in.–lbf)

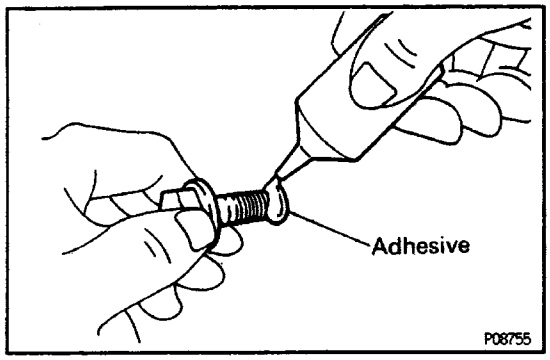

20. INSTALL FLYWHEEL OR DRIVE PLATE

(a) Apply adhesive to 2 or 3 threads of the mounting bolt end.

Adhesive:

Part No. 08833–00070, THREE BOND 1324 or equivalent

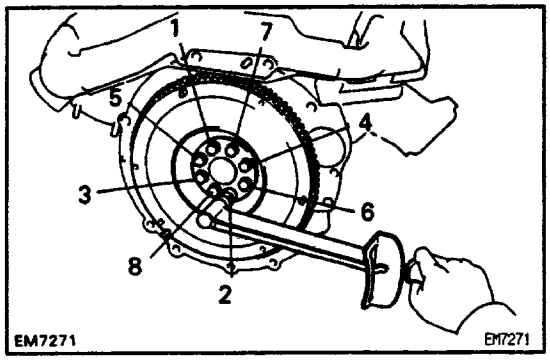

(b) M/T:

Install the flywheel on the crankshaft.

(c) A/T:

install the front spacer, drive plate and rear plate on the crankshaft.

(d) Install and uniformly tighten the mounting bolts in several passes, in the sequence shown.

Torque:

M/T: 88 N–m (900 kgf–cm,6^ ft–lbf)

A/T: 83 N–m (850 kgf–cm, 61 ft–lbf)

ENGINE INSTALLATION

1. M/T only.

INSTALL CLUTCH DISC AND COVER

2. INSTALL TRANSMISSION TO ENGINE

3. INSERT ENGINE AND TRANSMISSION ASSEMBLY IN VEHICLE

(a) Attach the engine chain hoist to the engine hangers.

(b) Slowly lower the engine and transmission assembly into the engine compartment.

NOTICE: Be careful not to hit the PNP switch.

(c) Keep the engine level, and align the RH and LH mountings and body mountings.

(d) Attach the RH and LH mounting insulators to the body mountings, and temporarily install the 4 bolts.

(e) Jack up and put the transmission onto the member.

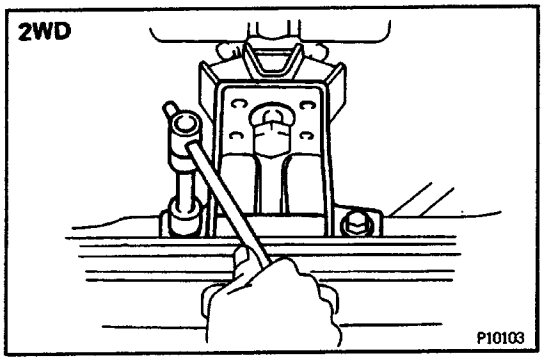

4. 2WD:

INSTALL ENGINE REAR MOUNTING BRACKET

(a) Raise the transmission slightly by raising the engine with a jack and a wooden block under the transmission.

(b) Install the engine rear mounting bracket to the support member.

Torque: 25 N–m (260 kgf–cm. 19 ft–lbf)

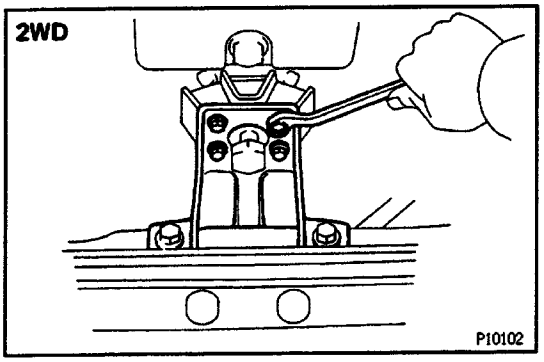

(c) Lower the transmission and rest it on the extension housing.

(d) Install the mounting bracket to the mounting insulator.

Torque: 13 N–m (130 kgf–cm, 9 ft–lbf)

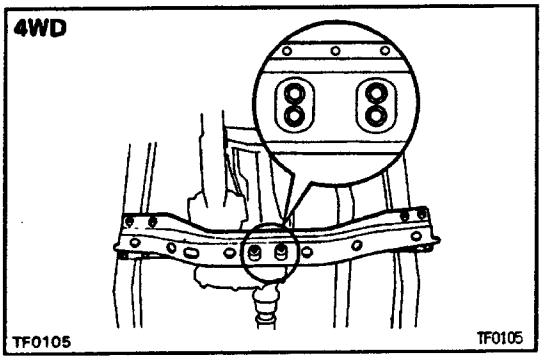

5. 4WD:

INSTALL NO.2 FRAME CROSSMEMBER

(a) Raise the transmission slightly with a jack.

(b) Install the frame crossmember to the side frame with the 8 bolts.

Torque: 95 N–m (970 kgf–cm, 70 ft–lbf)

(c) Lower the transmission and transfer.

(d) Install the frame crossmember to the engine rear mounting insulator.

Torque: 13 N–m (130 kgf–cm, 9 ft–lbf)

6. TIGHTEN RH AND LH ENGINE MOUNTING INSULATOR BOLTS

Tighten the 4 bolts holding the mounting insulators to the body mountings.

Torque: 37 N–m (380 kgf/cm. 27 ft–lbf)

7. 4WD only:
INSTALL NO.1 FRONT FLOOR AND BRAKE TUBE HEAT INSULATOR

8. 4WD only:
INSTALL STABILIZER BAR

9. 4WD only:
INSTALL TRANSFER UNDER COVER

10. CONNECT SPEEDOMETER CONNECTOR

11. 2WD A/T only:
CONNECT MANUAL SHIFT LINKAGE

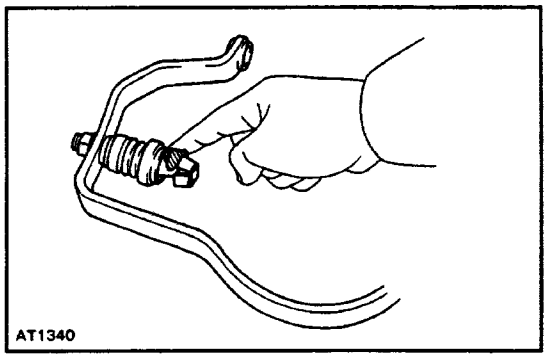

12. 4WD A/T only:
CONNECT TRANSFER SHIFT LINKAGE

(a) Apply MP grease to the shaft joint.

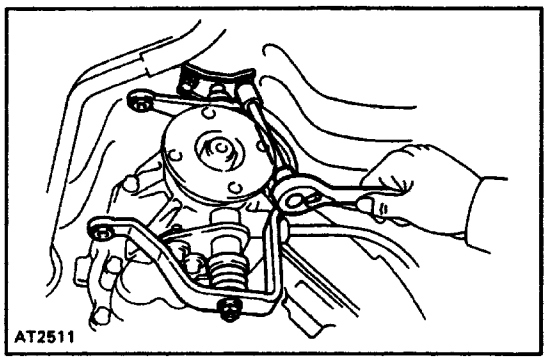

(b) Install the cross shaft to the body.

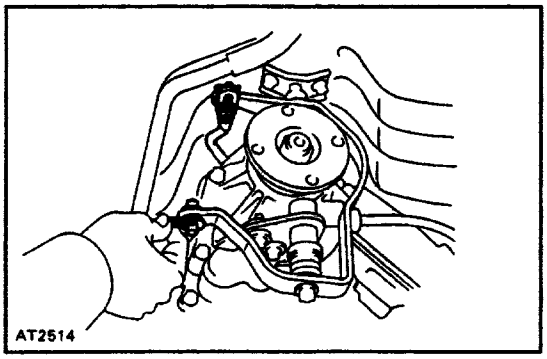

(c) Connect the No.1 and No.2 transfer shift linkage to the cross shaft.

13. 4WD only:
INSTALL FRONT PROPELLER SHAFT
(See propeller shaft installation in Propeller Shaft)
14. INSTALL REAR PROPELLER SHAFT
(See propeller shaft installation in Propeller Shaft)
15. M/T only:
INSTALL SHIFT LEVERS

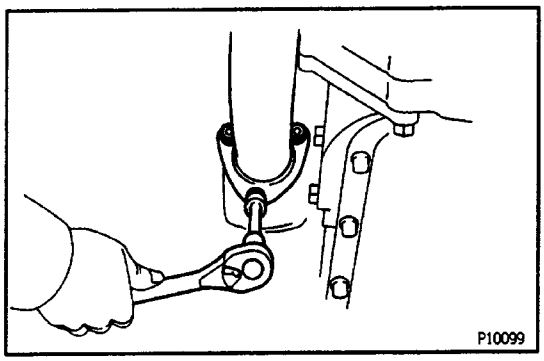

16. INSTALL FRONT EXHAUST PIPE
(a) Connect the exhaust pipe to the LH exhaust manifold with new gasket and 3 new nuts.
Torque: 62 N–m (630 kgf–cm, 46 ft–lbf)
(b) Connect the exhaust pipe to the catalytic converter with new gasket and the 2 bolts.
Torque: 39 N–m (400 kgf–cm, 29 ft–lbf)

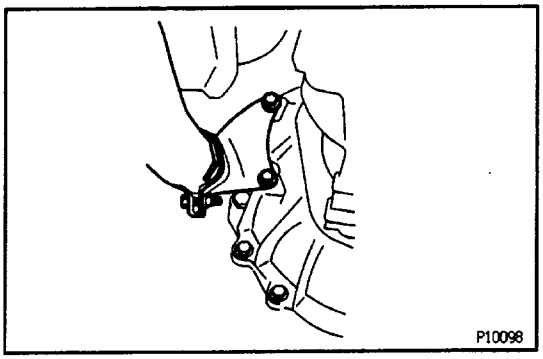

(c) Install the pipe bracket to the transmission with the 2 bolts.
(d) Install the pipe bracket to the exhaust pipe with the pipe clamp.
(e) Connect the heated oxygen sensor connector.

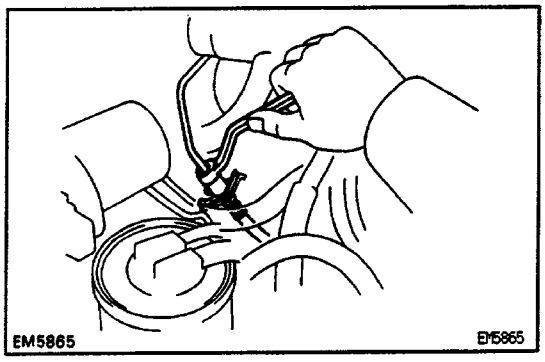

17. M/T only:
CONNECT CLUTCH RELEASE CYLINDER HOSE
18. INSTALL A/C COMPRESSOR

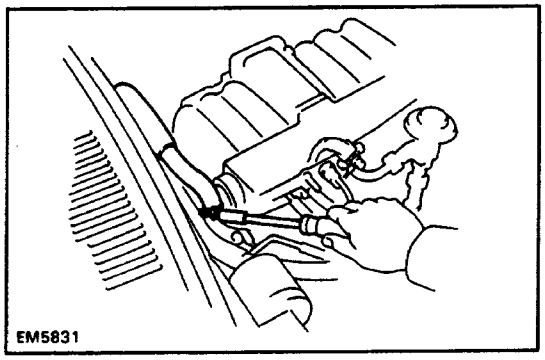

19. CONNECT HEATER HOSES
20. CONNECT FUEL INLET AND OUTLET HOSES

21. CONNECT STRAP, WIRES, CONNECTORS, HOSES AND CABLES

(a) Connect these cables:

- Accelerator cable
- A/T only:
  Throttle cable
- w/ Cruise Control System:
  Cruise control cable

(b) Connect these hoses:

- PS air hoses to gas filter and air pipe
- Brake booster hose
- w/ Cruise Control System:
  Cruise control vacuum hose
- Charcoal canister hose to canister
- VSV vacuum hoses

(c) Connect these strap, wires and connectors:

- Ground strap to LH fender apron
- Generator connector and wire
- Igniter connector
- Oil pressure sender gauge connector
- Ground strap to engine rear side
- ECM connectors
- VSV connectors
- A/C compressor connector
- M/T only:
  Starter relay connector
- Solenoid resister connector
- DLC1
- w/ ADD:
  ADD switch connector

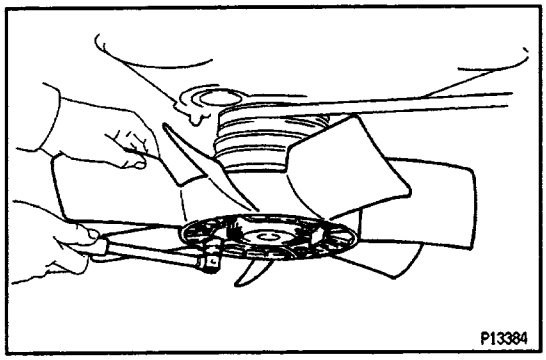

22. INSTALL GENERATOR DRIVE BELT

23. INSTALL COOLING FAN

Install the cooling fan with the 4 nuts.

Torque: 5.4 N–m (55 kgf–cm, 48 in.–lbf)

24. INSTALL A/C DRIVE BELT

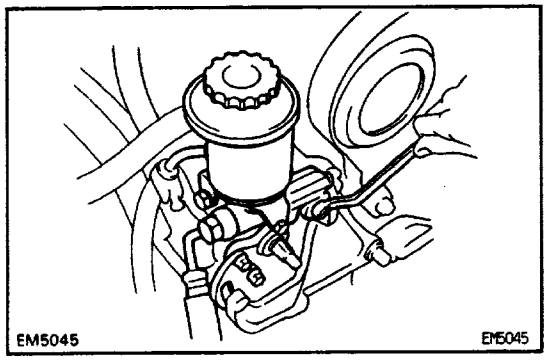

25. INSTALL PS PUMP

26. INSTALL PS PUMP PULLEY AND DRIVE BELT

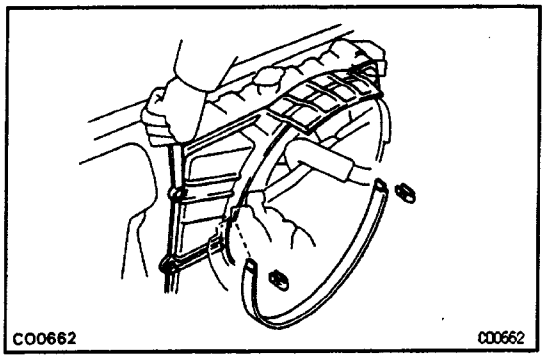

27. INSTALL RADIATOR

(a) Install the radiator with the 4 bolts.
(b) Install the No.1 fan shroud with the 4 bolts.
(c) Install the No.2 fan shroud with the 2 clips.

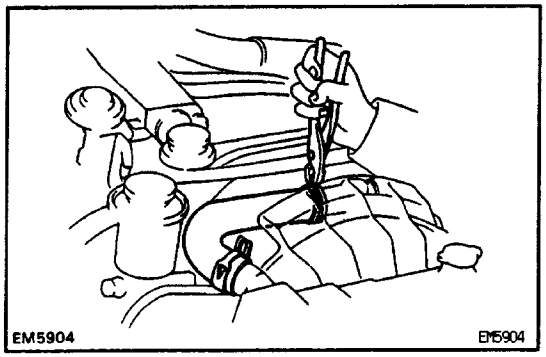

(d) Install the radiator hoses.
(e) A/T:
Connect the oil cooler hoses.
(f) Connect the radiator reservoir hose.

28. INSTALL AIR CLEANER AND HOSE
29. INSTALL BATTERY
30. FILL WITH ENGINE COOLANT
31. FILL WITH ENGINE OIL
32. START ENGINE AND CHECK FOR LEAKS
33. PERFORM ENGINE ADJUSTMENT
(See tune–up)
34. INSTALL ENGINE UNDER COVER
35. INSTALL HOOD
36. ROAD TEST VEHICLE
Check for abnormal noise, shock slippage, correct shift points and smooth operation.
37. RECHECK ENGINE COOLANT AND OIL LEVELS

CYLINDER HEAD

COMPONENTS FOR REMOVAL AND INSTALLATION

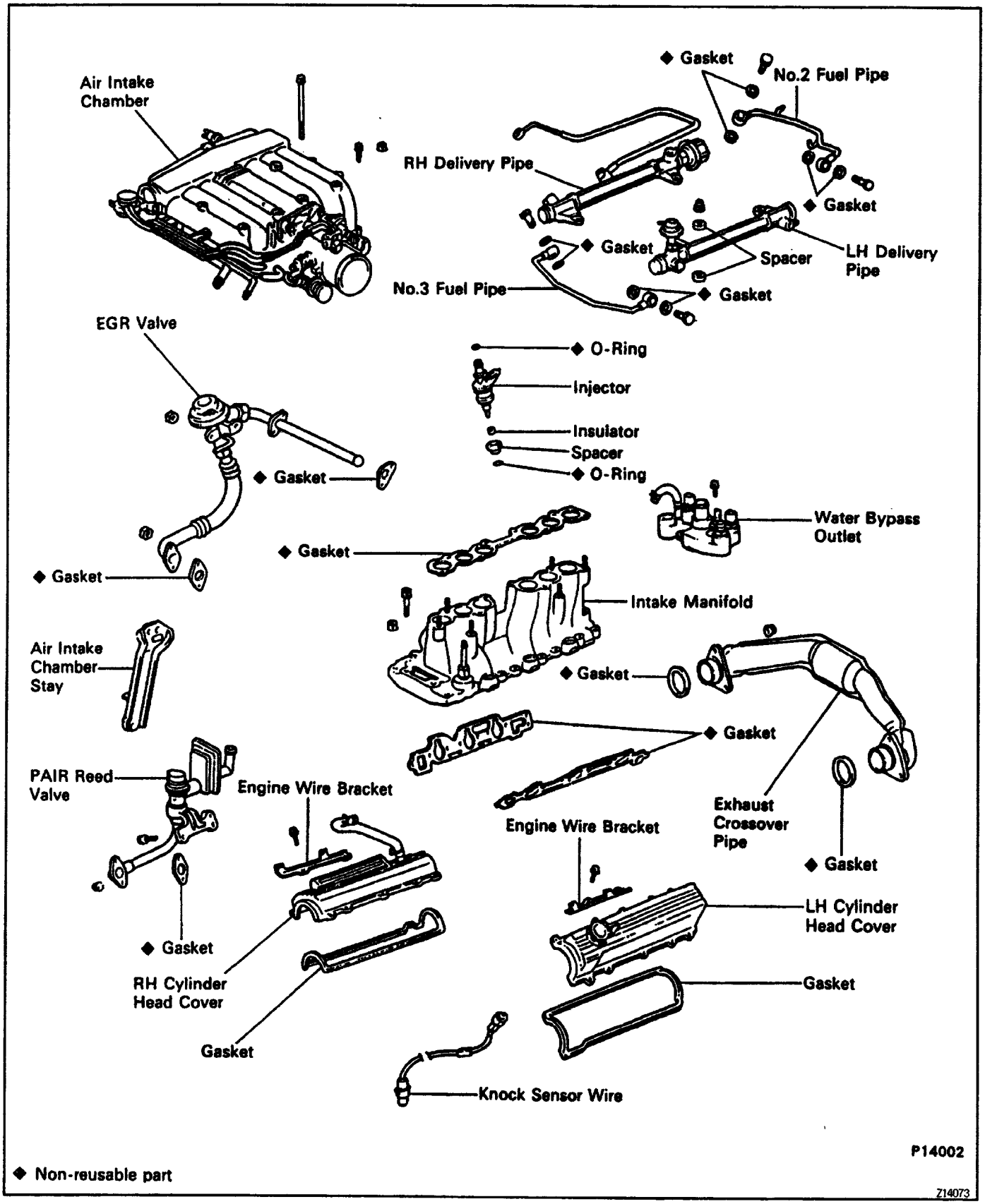

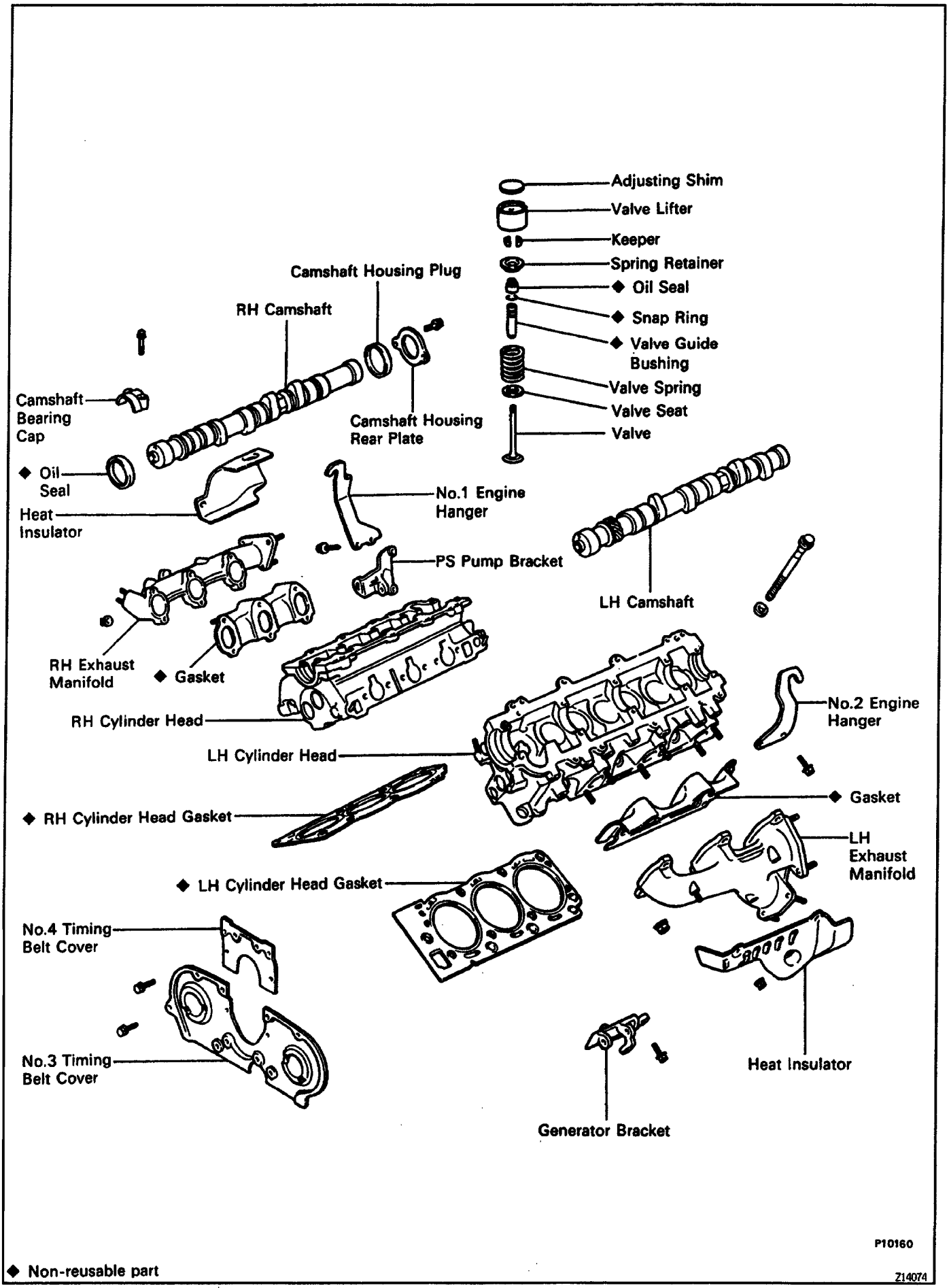

◆ Non-reusable part

Z14074

CYLINDER HEADS REMOVAL

1. REMOVE AIR CLEANER AND HOSE

2. DRAIN ENGINE COOLANT

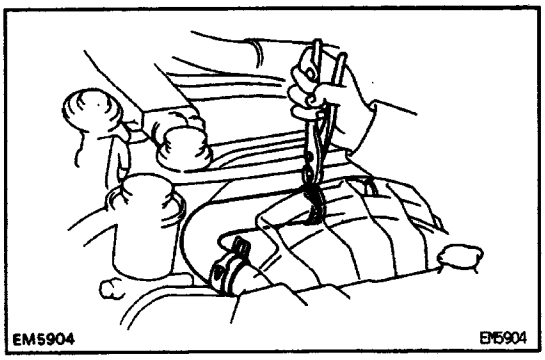

3. REMOVE RADIATOR

(a) Disconnect the reservoir hose.

(b) A/T only:

Disconnect the oil cooler hoses.

(c) Remove the radiator hoses.

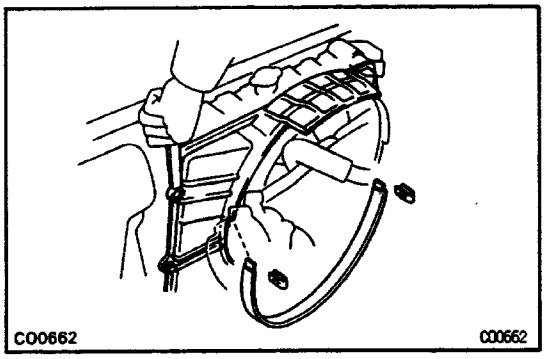

(d) Remove the 2 clips and No.2 fan shroud.

(e) Remove the 4 bolts and No.1 fan shroud.

(f) Remove the 4 bolts and radiator.

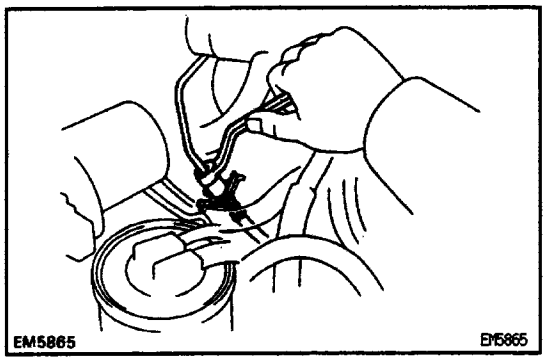

4. M/T only:

DISCONNECT CLUTCH RELEASE CYLINDER HOSE

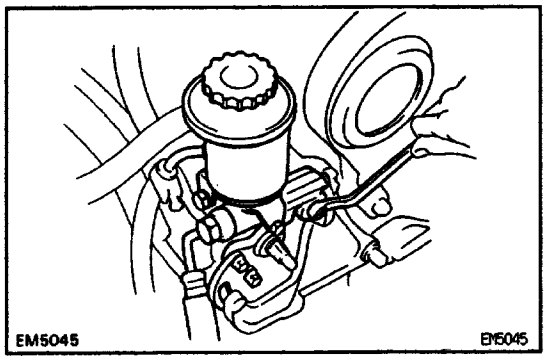

5. REMOVE PS DRIVE BELT AND PUMP PULLEY

6. DISCONNECT PS PUMP FROM ENGINE

7. REMOVE A/C DRIVE BELT

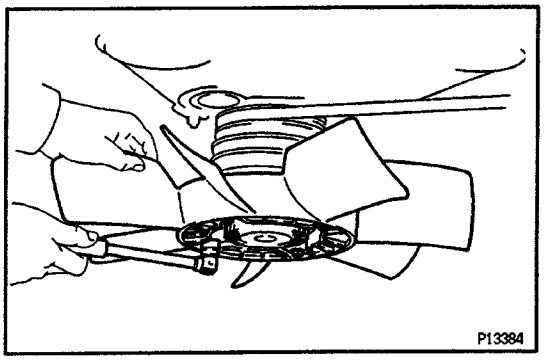

8. REMOVE COOLING FAN

Remove the 4 nuts and cooling fan.

9. REMOVE GENERATOR DRIVE BELT

10. DISCONNECT STRAP, WIRES, CONNECTORS, HOSES AND CABLES

(a) Disconnect the strap, wires and connectors:

- Ground strap from LH fender apron
- Generator connector and wire
- Igniter connector
- Oil pressure sender gauge connector
- Ground strap from engine rear side
- ECM connectors
- VSV connectors
- A/C compressor connector
- M/T only:
- Starter relay connector
- Solenoid resister connector
  w/ ADD:
  ADD switch connector

(b) Disconnect these hoses:

PS air hoses from gas filter and air pipe
Brake booster hose
w/ Cruise Control System:
Cruise control vacuum hose

- Charcoal canister hose from canister
  VSV vacuum hoses

(c) Disconnect these cables:

Accelerator cable
A/T only:
Throttle cable
w/ Cruise Control System:
Cruise control cable

11. DISCONNECT HEATER HOSES

12. DISCONNECT FUEL INLET AND OUTLET HOSES

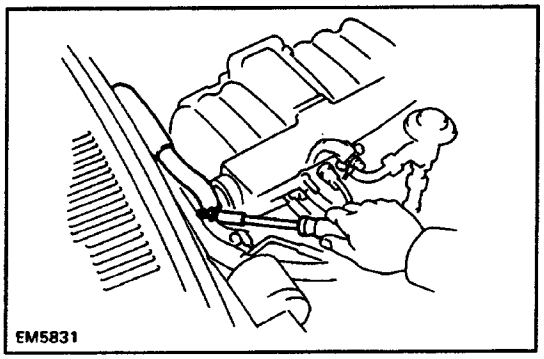

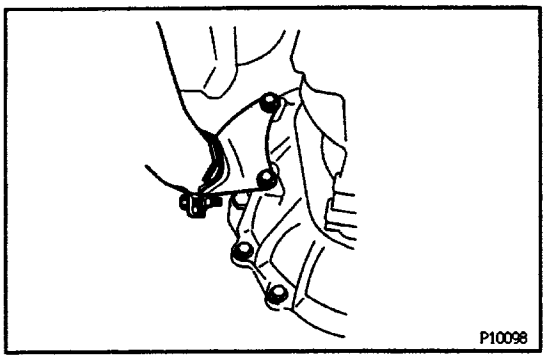

13. REMOVE FRONT EXHAUST PIPE

(a) Disconnect the heated oxygen sensor connector.
(b) Loosen the pipe clamp bolt.
(c) Remove the 2 bolts and pipe bracket.

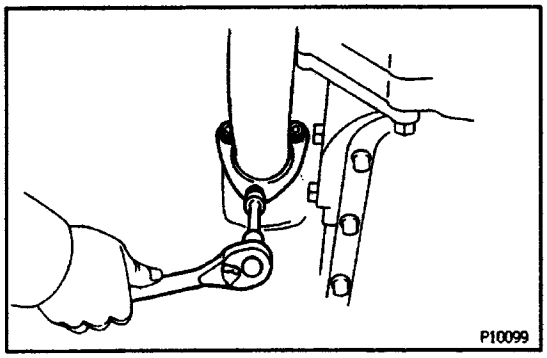

(d) Remove the 3 nuts, and disconnect the exhaust pipe from the exhaust manifold. Remove the gasket.
(e) Remove the 2 bolts, joint retainer, exhaust pipe and gasket from the catalytic converter.

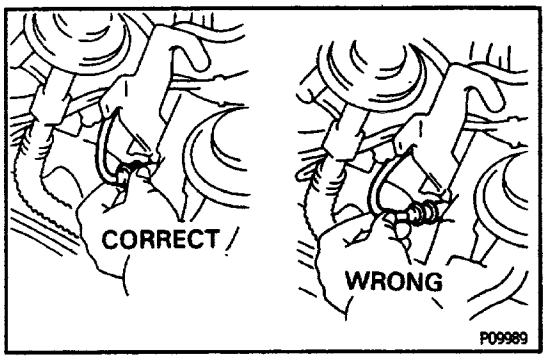

14. DISCONNECT HIGH–TENSION CORDS FROM SPARK PLUGS

Disconnect the high – tension cords at the rubber boot. Do not pull on the cords.

NOTICE: Pulling on or bending the cords may damage the conductor Inside.

15. REMOVE DISTRIBUTOR

16. REMOVE TIMING BELT

(See steps 4 to6, 12 to 19 and 24 in timing belt removal in timing belt)

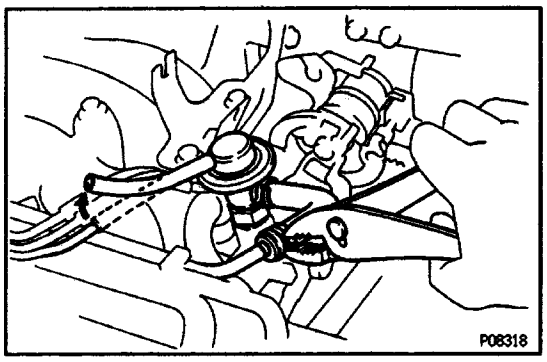

17. REMOVE AIR INTAKE CHAMBER

(a) Disconnect the throttle position sensor connector.
(b) Disconnect the charcoal canister vacuum hose from the throttle body.
(c) Disconnect the vacuum and fuel hoses from the pressure regulator.

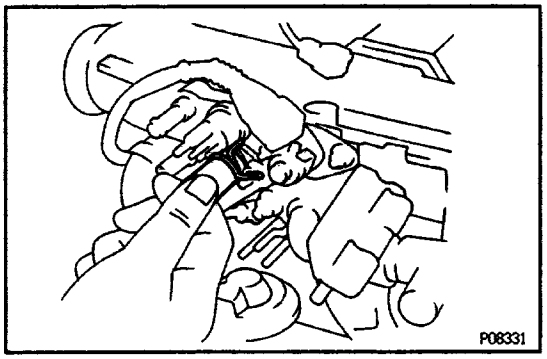

(d) Disconnect the PCV hose from the union.

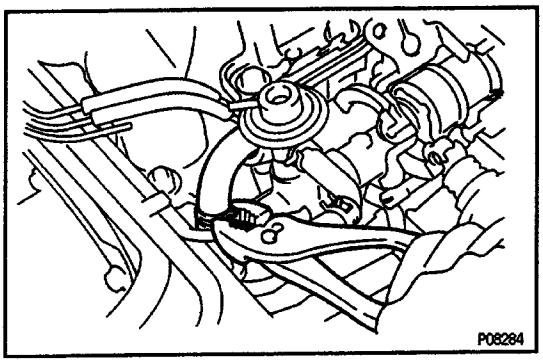

(e) Disconnect the No.4 water bypass hose from the union of intake manifold.

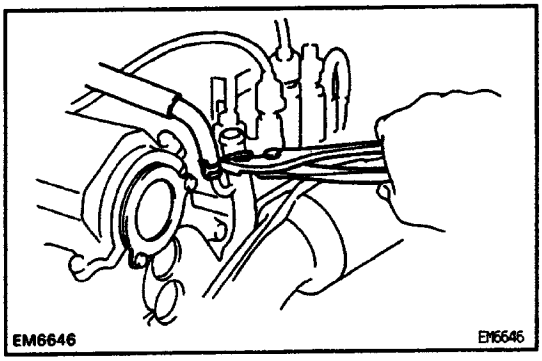

(f) Remove the No.5 water bypass hose from the water bypass pipe.

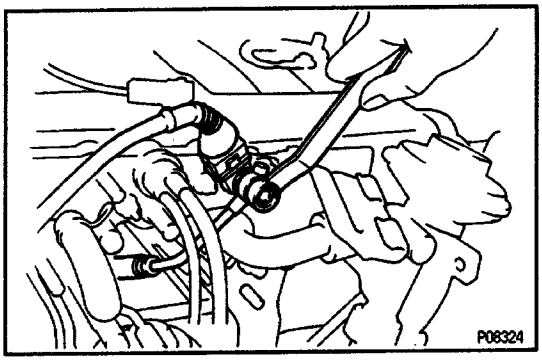

(g) Disconnect the cold start injector connector.
(h) Disconnect the vacuum hose from the gas filter.
(i) Remove the union bolt, 2 gaskets and cold start injector tube.
(j) Disconnect the EGR gas temperature sensor connector.
(k) Disconnect the EGR vacuum hoses from the air pipe and EGR vacuum modulator.

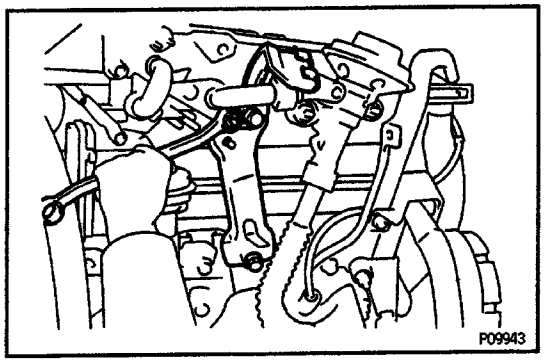

(l) Remove the nut. 2 bolts, intake chamber stay and throttle cable bracket.

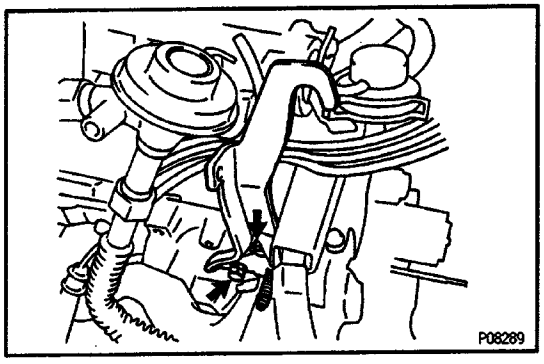

(m) Remove the 2 bolts and No.1 engine hanger.

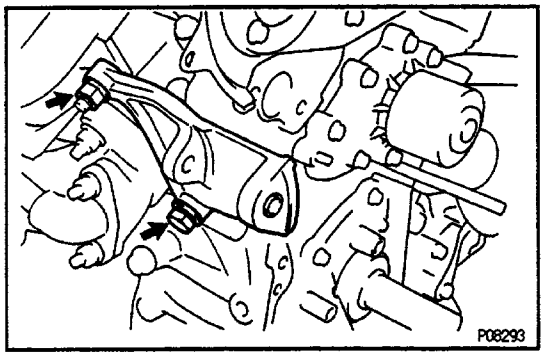

(n) Remove the nut, bolt and PS pump bracket.

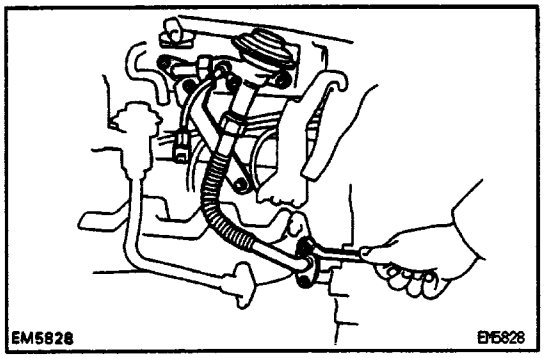

(o) Remove the 5 nuts, the EGR valve and pipes assembly and 2 gaskets.

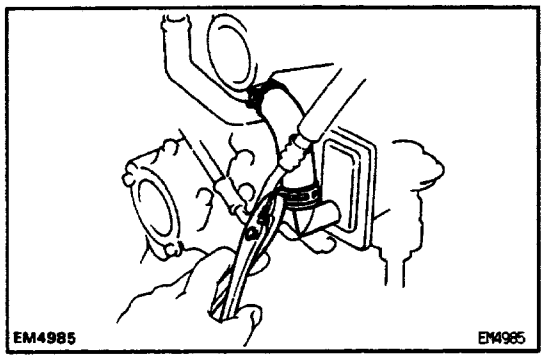

(p) Disconnect the No.1 air hose from the PAIR reed valve.

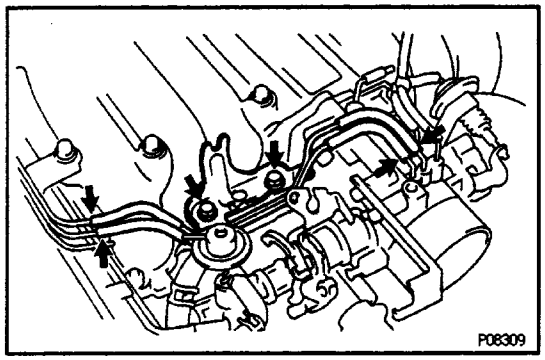

(q) Disconnect the 4 vacuum hoses from the air pipes.
(r) Remove the 2 bolts and accelerator cable bracket.

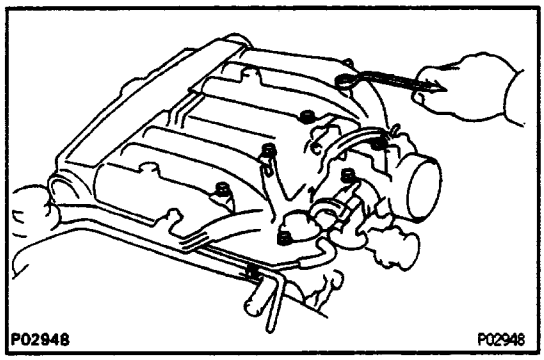

(s) Remove the 6 bolts, 2 nuts, intake chamber and gasket.

18. REMOVE ENGINE WIRE

(a) Disconnect these connectors and wire:

- Knock sensor connector
- Cold start injector time switch connector
- ECT sensor connector
- ECT sender gauge connector
- No.1 ECT switch connector
- RH ground strap from No.3 camshaft bearing cap
- Injector connectors

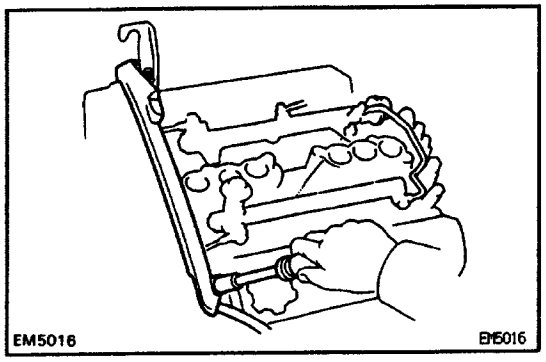

(b) Remove the 2 bolts and engine wire.

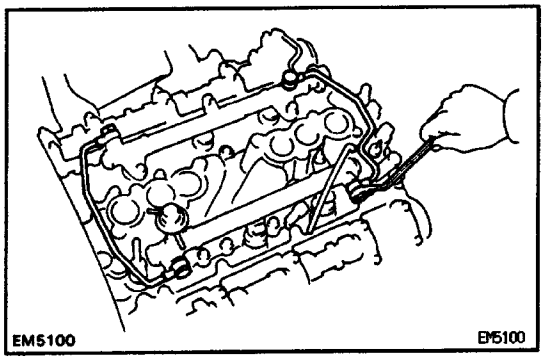

19. REMOVE NO.2 AND NO.3 FUEL PIPES

(a) Disconnect the vacuum hose from the TVV.

(b) Remove the 4 union bolts, 8 gaskets, No.2 and No.3 fuel pipes.

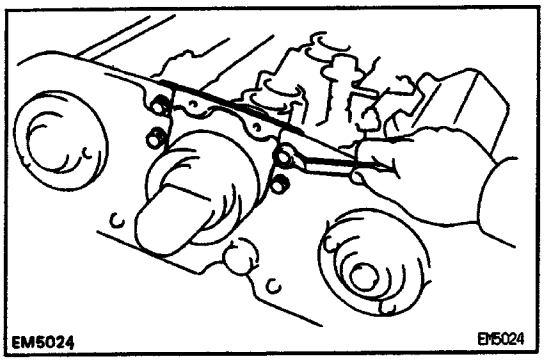

20. REMOVE NO.4 TIMING BELT COVER

Remove the 4 bolts and timing belt cover.

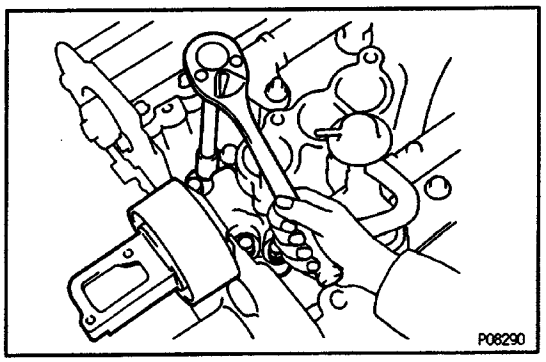

21. REMOVE NO.2 IDLER PULLEY

Remove the 4 bolts and idler pulley.

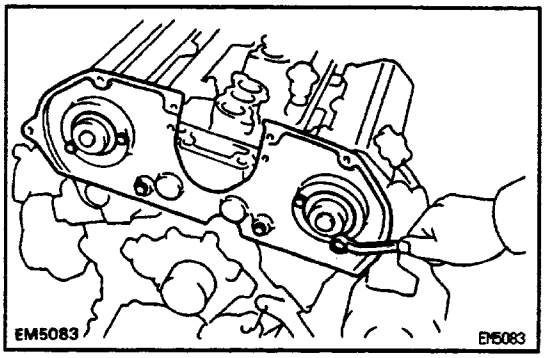

22. REMOVE NO.3 TIMING BELT COVER

Remove the 6 bolts and timing belt cover.

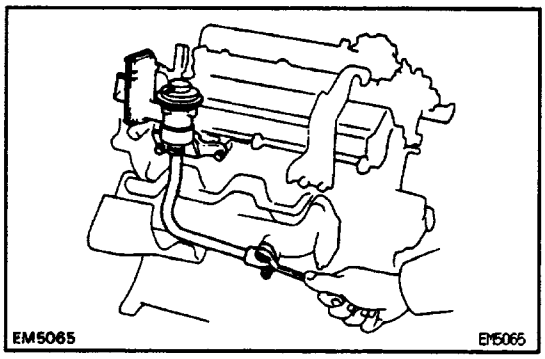

23. REMOVE VSV BRACKET AND VSV PROM PAIR REED VALVE

24. REMOVE PAIR REED VALVE AND NO.1 AIR INJECTION MANIFOLD

Remove the 2 bolts, 2 nuts, the PAIR reed valve, injection manifold assembly and gasket.

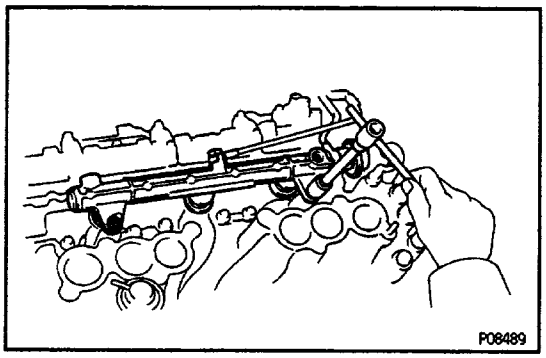

25. REMOVE DELIVERY PIPES AND INJECTORS

(a) Remove the 4 nuts holding the delivery pipes to the intake manifold.

(b) Remove the 2 delivery pipes and 6 injectors assemblies.

NOTICE: Be careful not to drop the injectors when removing the delivery pipes.

(c) Remove the 4 insulators, 10 spacers and 4 0 –rings from the cylinder head.

(d) Pull out the 6 injectors from the delivery pipes.

(e) Remove the O–ring and grommet from each injector.

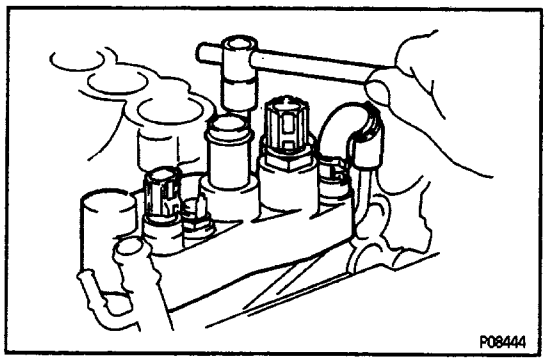

26. REMOVE WATER BYPASS OUTLET

(a) Disconnect the No.3 water hose from the No. 1 water bypass pipe.

(b) Remove the 2 nuts, water bypass outlet and gasket.

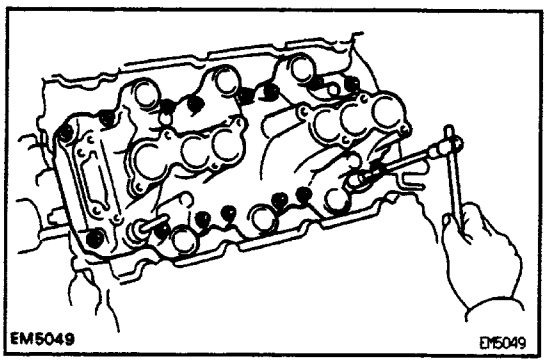

27. REMOVE INTAKE MANIFOLD

Remove the 12 bolts, 4 nuts, intake manifold and 2 gaskets.

28. REMOVE KNOCK SENSOR WIRE

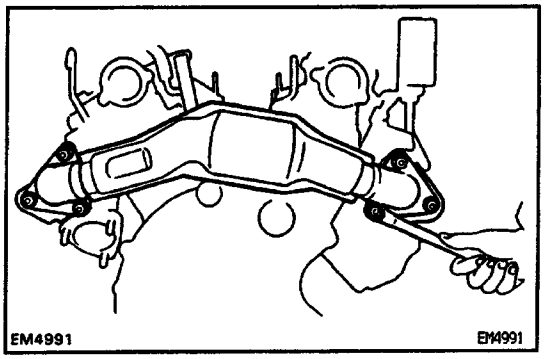

29. REMOVE EXHAUST CROSSOVER PIPE

Remove the 6 nuts, crossover pipe and 2 gaskets.

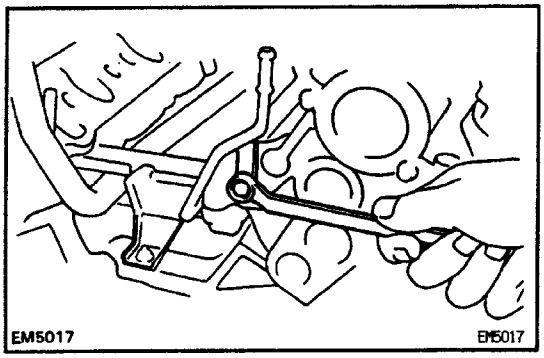

30. DISCONNECT WATER BYPASS PIPE FROM RH CYLINDER HEAD

Remove the bolt, and disconnect the water bypass pipe from the RH cylinder head.

31. REMOVE GENERATOR

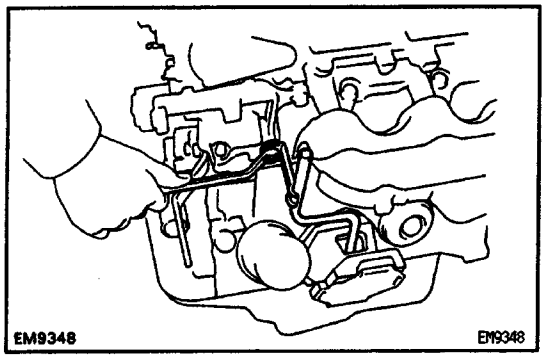

32. REMOVE OIL DIPSTICK GUIDE AND DIPSTICK

(a) Remove the oil dipstick.

(b) Remove the bolt and oil dipstick guide.

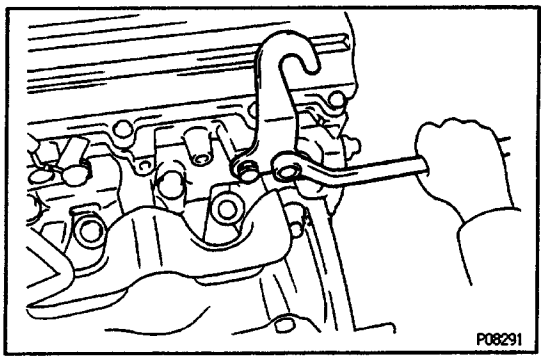

33. REMOVE NO.2 ENGINE HANGER FROM LH CYLINDER HEAD

Remove the 2 bolts and engine hanger.

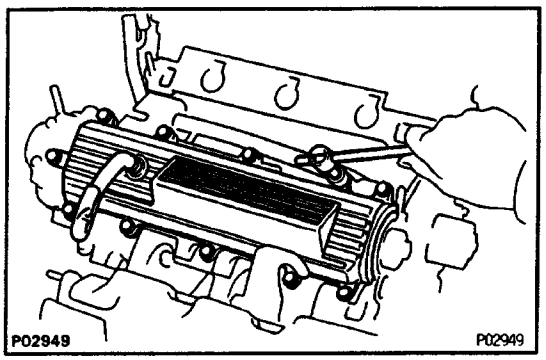

34. REMOVE CYLINDER HEAD COVERS

Remove the 11 bolts, engine wire bracket, cylinder head cover and gasket. Remove the 2 cylinder head covers.

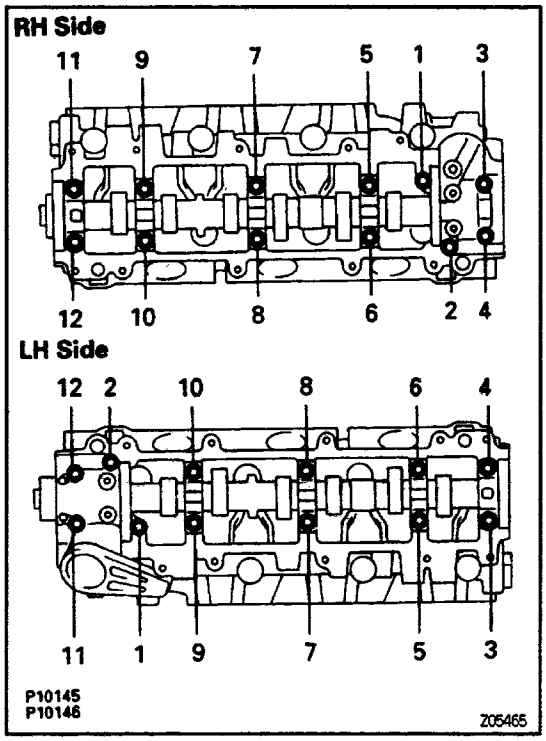

35. REMOVE CAMSHAFTS

(a) Uniformly loosen and remove the 12 bearing cap bolts on each cylinder head, in several passes, in the sequence shown, then repeat for the other side, as shown.

(b) Remove the 10 camshaft bearing caps, 2 oil seals and 2 camshafts.

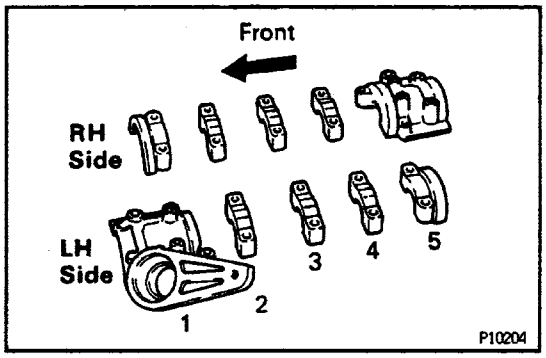

HINT: Arrange the bearing caps in correct order.

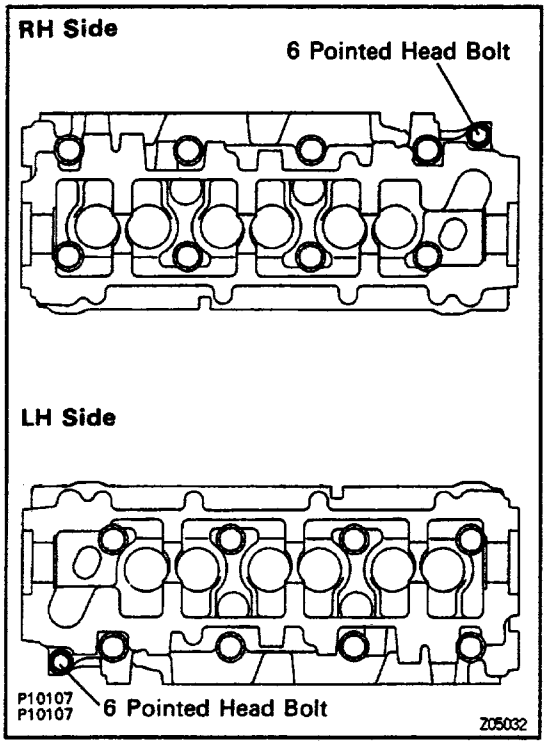

36. REMOVE CYLINDER HEADS

(a) Remove the cylinder head (6 pointed head) bolt from each cylinder head.

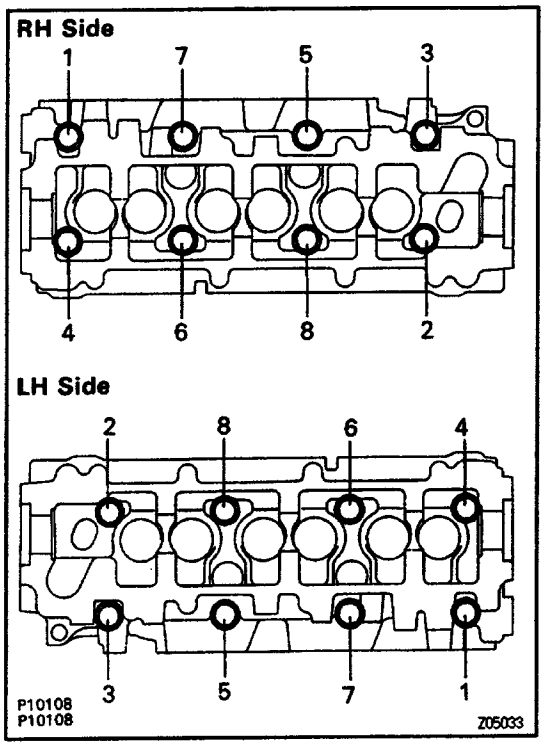

(b) Uniformly loosen the 8 cylinder head bolts on each cylinder head in several passes, in the sequence shown, then repeat for the other side, as shown.
Remove the 18 cylinder head bolts and plate washers.
NOTICE: Head warpage or cracking could result from removing bolts in Incorrect order.

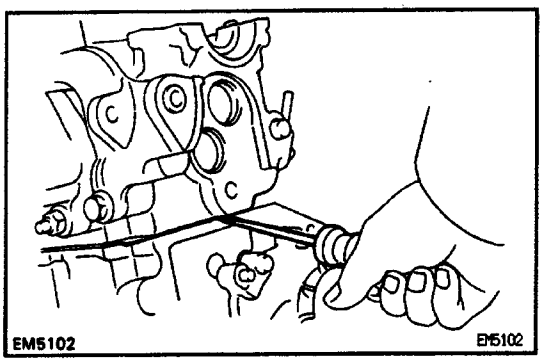

(c) Lift the cylinder head from the dowels on the cylinder block, and place the 2 cylinder heads on wooden blocks on a bench.
If the cylinder head is off, pry between the cylinder head and cylinder block with a screwdriver.
NOTICE: Be careful not to damage the contact surfaces of the cylinder head and cylinder block.

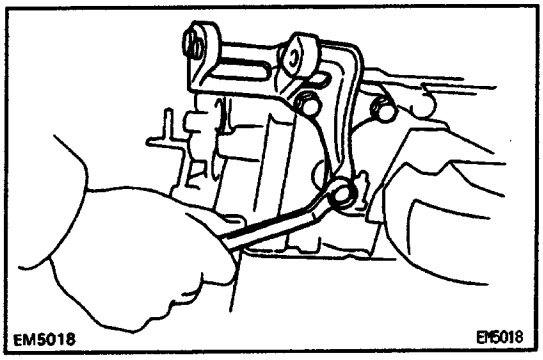

37. REMOVE GENERATOR BRACKET
Remove the 3 bolts and brackets.

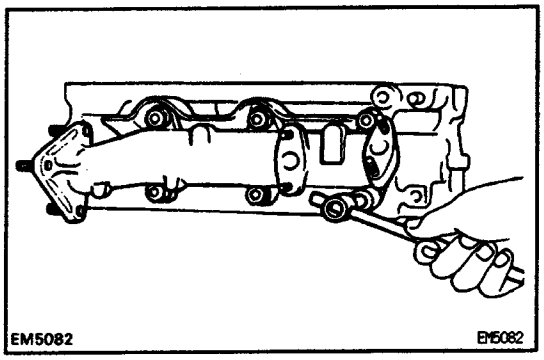

38. REMOVE EXHAUST MANIFOLD FROM RH CYLINDER HEAD
(a) Remove the bolt, nut and exhaust manifold heat insulator.
(b) Remove the 6 nuts, exhaust manifold and gasket.

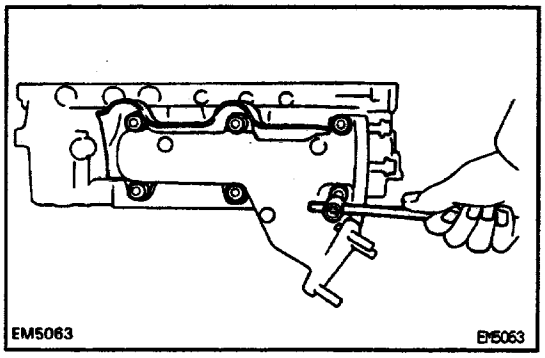

39. REMOVE EXHAUST MANIFOLD FROM LH CYLINDER HEAD

(e) Remove the 3 nuts and exhaust manifold heat insulator.

(b) Remove the 6 nuts, exhaust manifold and gasket.

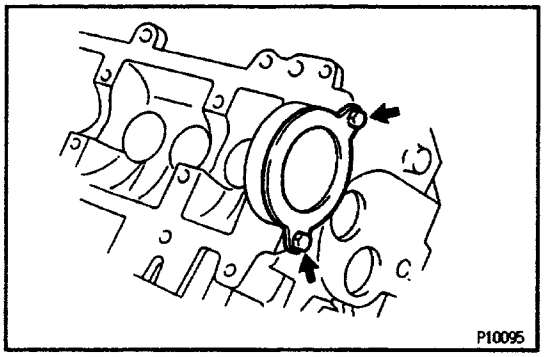

CYLINDER HEADS DISASSEMBLY

(See Components for Removal and Installation)

1. REMOVE CAMSHAFT HOUSING PLUGS

(a) Remove the 2 bolts and housing rear cover.

(b) Remove the housing plug.

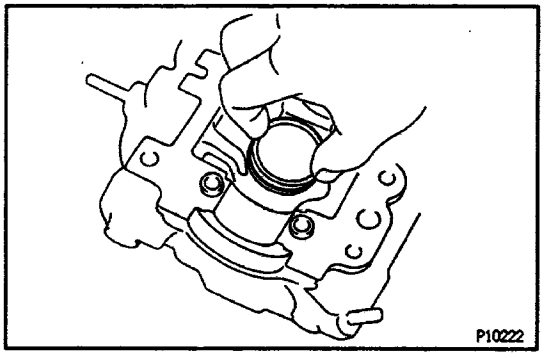

2. REMOVE VALVE LIFTERS AND SHIMS

Pull out the valve lifter and shim by hand.

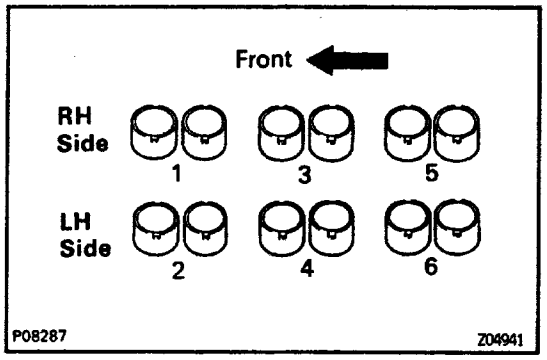

HINT: Arrange the valve lifters and shims in correct order.

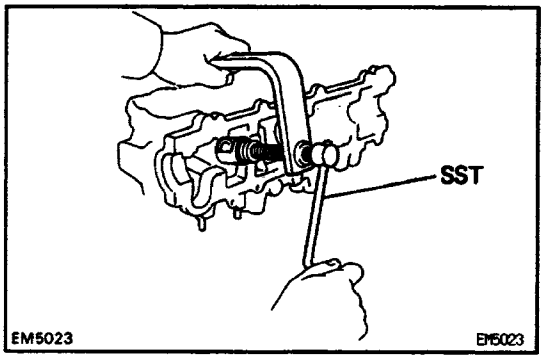

3. REMOVE VALVES

(a) Using SST, compress the valve spring and remove the 2 keepers.

SST 09202–43013

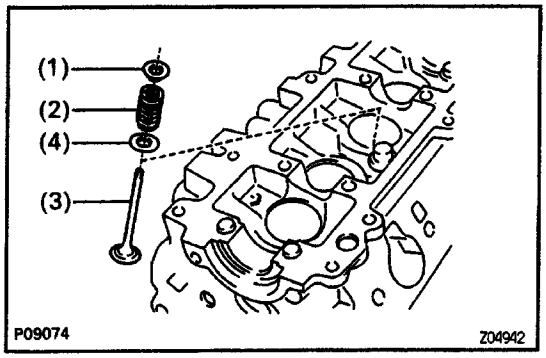

(b) Remove these parts:
(1) Spring retainer
(2) Valve spring
(3) Valve
(4) Spring seat

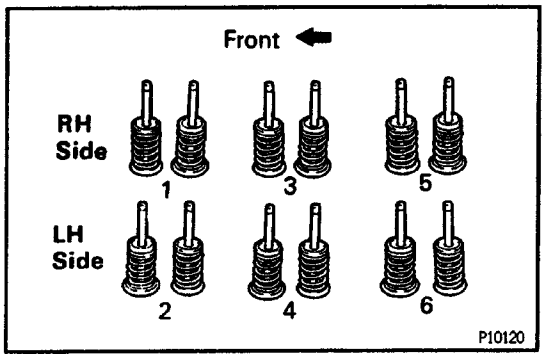

HINT: Arrange the valves, valve springs, spring seats and spring retainers in correct order.

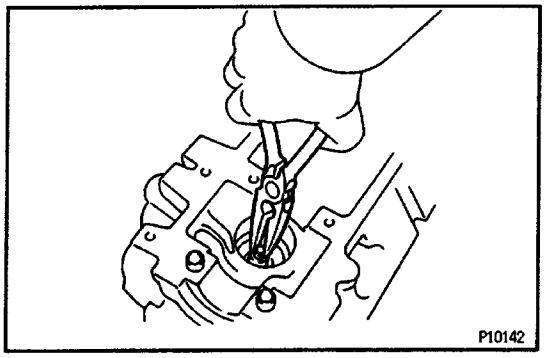

(c) Using needle–nose pliers, remove the oil seal.

CYLINDER HEAD COMPONENTS INSPECTION AND REPAIR

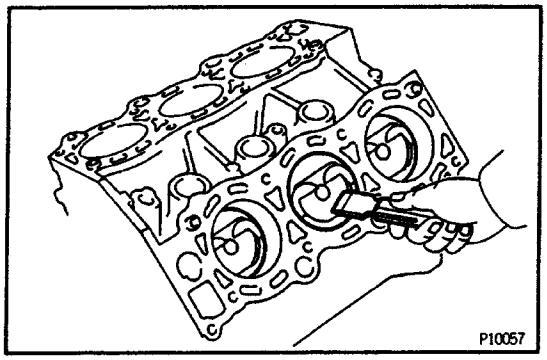

1. CLEAN TOP SURFACES OF PISTONS AND CYLINDER BLOCK

(a) Turn the crankshaft, and bring each piston to top dead center (TDC). Using a gasket scraper, remove all the carbon from the piston top surface.

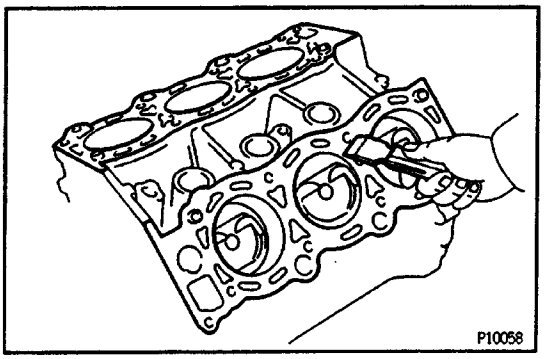

(b) Using a gasket scraper, remove all the gasket material from the cylinder block surface.
(c) Using compressed air, blow carbon and oil from the bolt holes.

CAUTION: Protect your eyes when using high–pressure compressed sir.

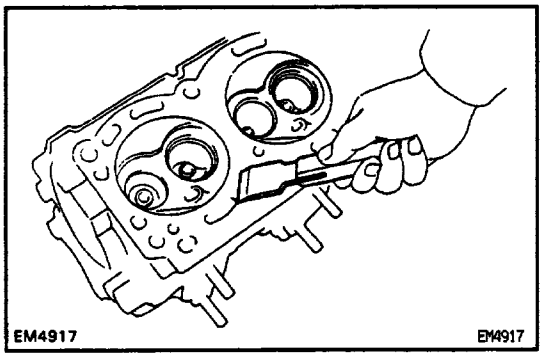

2. CLEAN CYLINDER HEAD

A. Remove gasket material

Using a gasket scraper, remove all the gasket material from the cylinder block contact surface.

NOTICE: Be careful not to scratch the cylinder block contact surface.

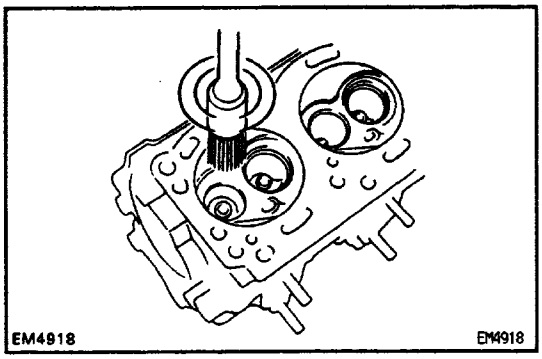

B. Clean combustion chambers

Using a wire brush, remove all the carbon from the combustion chambers.

NOTICE: Be careful not to scratch the cylinder block contact surface.

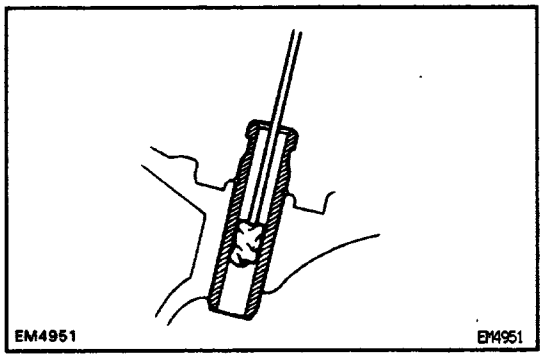

C. Clean valve guide bushings

Using a valve guide bushing brush and solvent, clean all the guide bushings.

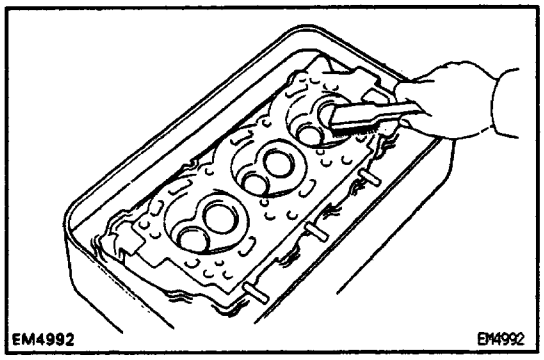

D. Clean cylinder head

Using a soft brush and solvent, thoroughly clean the cylinder head.

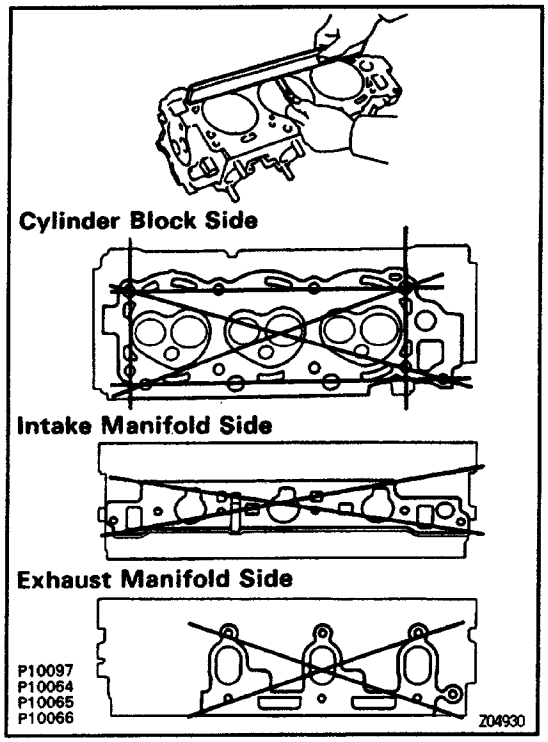

3. INSPECT CYLINDER HEAD

A. Inspect for flatness

Using a precision straight edge and feeler gauge, measure the surfaces contacting the cylinder block and the manifolds for warpage.

Maximum warpage:

4 0.10 mm (0.0039 in.)

If warpage is greater than maximum, replace the cylinder head.

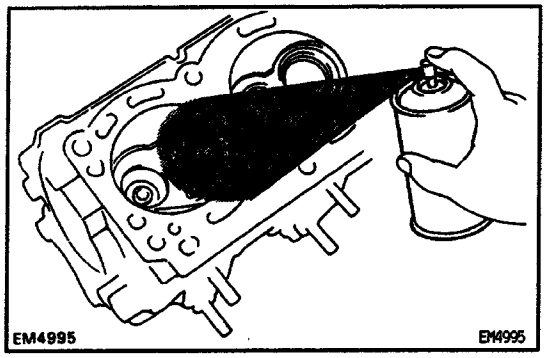

B. Inspect for cracks

Using a dye penetrant, check the combustion chamber, intake ports, exhaust ports and cylinder block surface for cracks.

If cracked, replace the cylinder head.

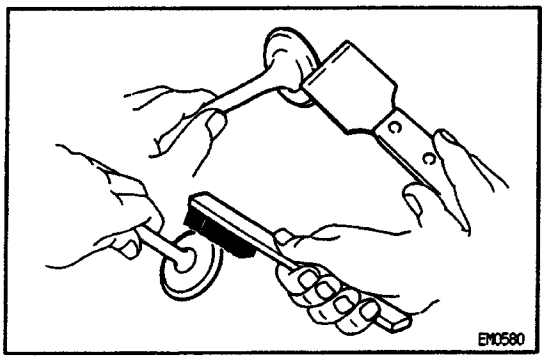

4. CLEAN VALVES

(a) Using a gasket scraper, chip oft any carbon from the valve head.

(b) Using a wire brush, thoroughly clean the valve.

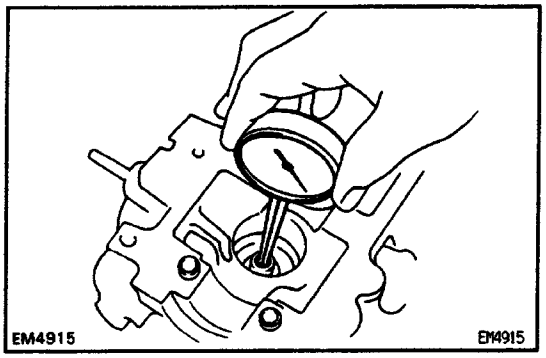

5. INSPECT VALVE STEMS AND GUIDE BUSHINGS

(a) Using a caliper gauge, measure the inside diameter of the guide bushing.

Bushing inside diameter:

8.0 10 – 8.030 mm (0.3154 – 0.3.16 1 in.)

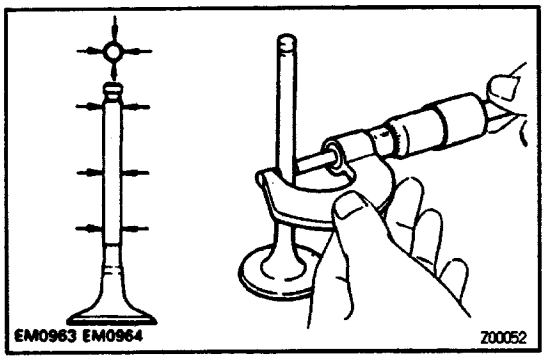

(b) Using a micrometer, measure the diameter of the valve stem.

Valve stem diameter:

Intake

7.970 – 7.985 mm (0.3138 – 0.3144 in.)

Exhaust

7.965 – 7.980 mm (0.3138 – 0.3142 in.)

(c) Subtract the valve stem diameter measurement from the guide bushing inside diameter measurement.

Standard oil clearance:

Intake

0.025 – 0.060 mm (0.0010 – 0.0024 in.)

Exhaust

0.030 – 0.065 mm (0.0012 – 0.0026 in.)

Maximum oil clearance:

Intake

0.08 mm (0.0031 in.)

Exhaust

0.10 mm (0.0039 in.)

If the clearance is greater than maximum, replace the valve and guide bushing.

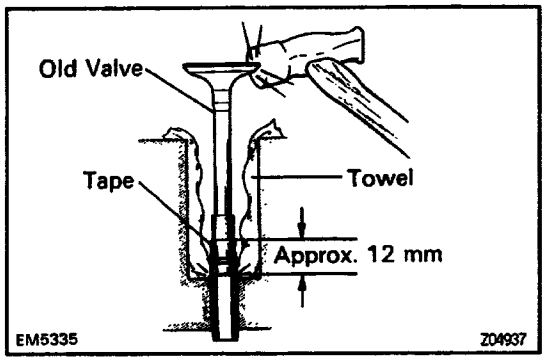

6. IF NECESSARY, REPLACE VALVE GUIDE BUSHINGS

(a) Insert an old valve wrapped with tape into the valve guide bushing, and break oft the valve guide bushing by hitting it with a hammer. Remove the snap ring.

HINT: Wrap the tape approx. 12 mm (0.47 in.) from the valve stem end.

NOTICE: Be careful not to damage the valve lifter hole.

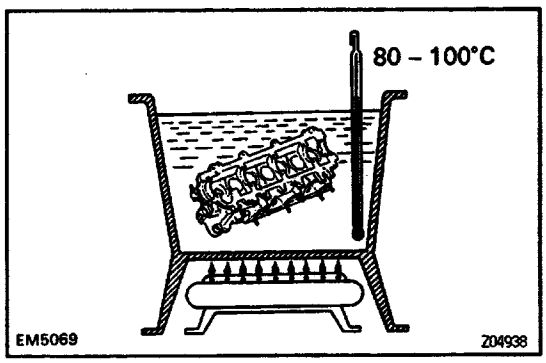

(b) Gradually heat the cylinder head to 80 – 100°C (176 – 212° F).

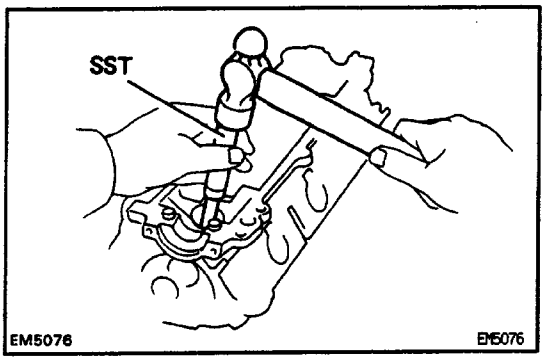

(c) Using SST and a hammer, tap out the guide bushing.
SST 09201–10000, 09608–35014(09608–06020)

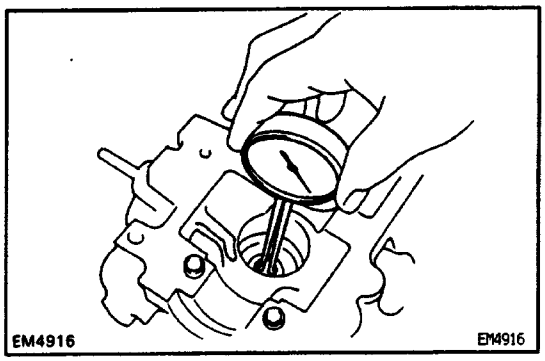

(d) Using a caliper gauge, measure the bushing bore diameter of the cylinder head.

(e) Select a new guide bushing (STD or O/S 0.05).
If the bushing bore diameter of the cylinder head is greater than 13.027 mm (0.5129 in.), machine the bushing bore to the following dimension:
13.050 – 13.077 mm (0.5138 – 0.5148 in.)
If the bushing bore diameter of the cylinder head is greater than 13.077 mm (0.5148 in.), replace the cylinder head.

Both intake and exhaust

Bushing bore mm (in.)	Bushing size
13.000 – 13.027 (0.5118 – 0.5129)	Use STD
13.050 – 13.077 (0.5138 – 0.5148)	Use O/S 0.05

V02465

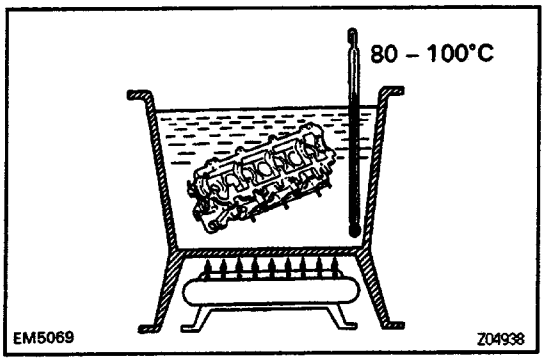

(f) Gradually heat the cylinder head to 80 – 100˚C (1176 – 212˚ F).

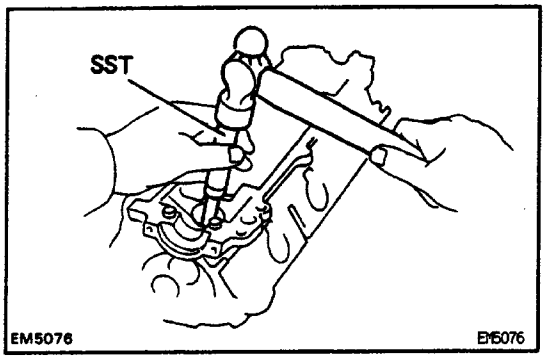

(g) Using SST and a hammer, tap in a new guide bushing until the snap ring makes contact with the cylinder head.
SST 09201–60011

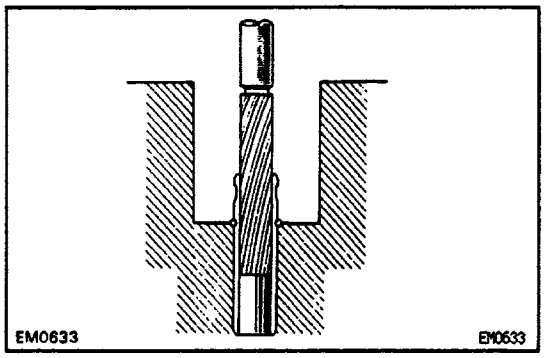

(h) Using a sharp 8 mm reamer, ream the guide bushing to the obtain standard specified clearance (See step 5 above) between the guide bushing and valve stem.

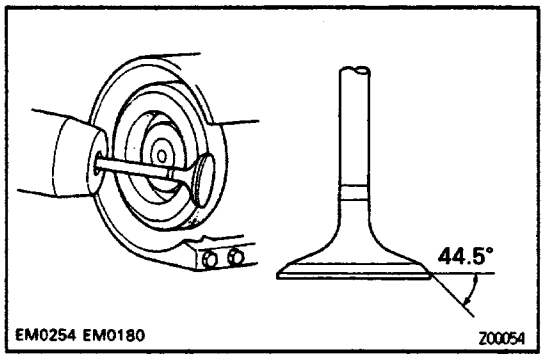

7. INSPECT AND GRIND VALVES

(a) Grind the valve enough to remove pits and carbon.

(b) Check that the valve is ground to the correct valve face angle.

Valve face angle:

44.50

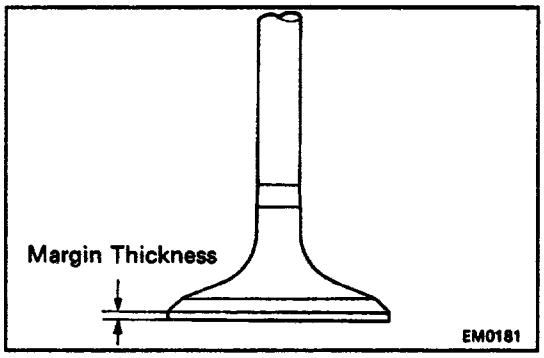

(c) Check the valve head margin thickness.

Standard margin thickness:

1.3 – 1.7 mm (0.051 – 0.067 in.)

Minimum margin thickness:

1.0 mm l0.039 in.)

If the margin thickness is less than minimum, replace the valve.

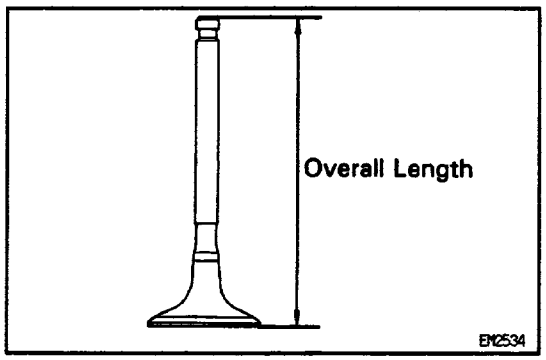

(d) Check the valve overall length.

Standard overall length:

104.3 mm (4.106 in.)

Minimum overall length:

103.8 mm (4.087 in.)

if the overall length is less than minimum, replace the valve.

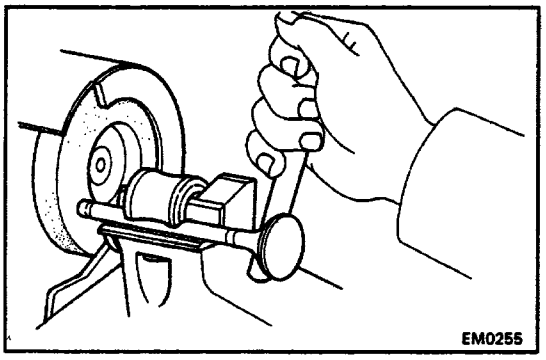

(e) Check the surface of the valve stem tip for wear.

If the valve stem tip is worn, resurface the tip with a grinder or replace the valve.

NOTICE: Do not grind off more than minimum.

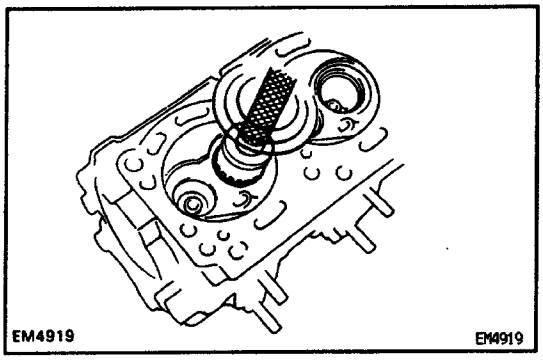

8. INSPECT AND CLEAN VALVE SEATS

(a) Using a 45˚ carbide cutter, resurface the valve seats.
Remove only enough metal to clean the seats.

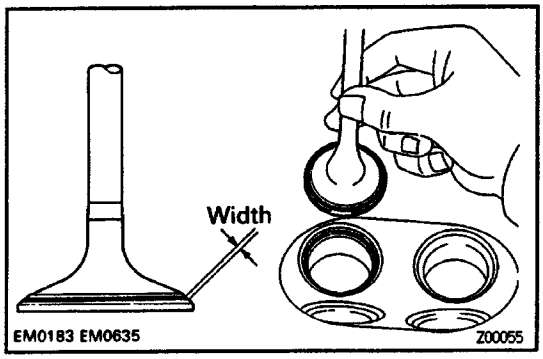

(b) Check the valve seating position.
Apply a light coat of prussian blue (or white lead) to the valve face. Lightly press the valve against the seat. Do not rotate valve.

(c) Check the valve face and seat for the following:

- If blue appears 360˚ around the face, the valve is concentric. If not, replace the valve.
- If blue appears 360˚ around the valve seat, the guide and face are concentric. If not, resurface the seat.
- Check that the seat contact is in the middle of the valve face with the following width:
  1.2 – 1.6 mm (0.047 – 0.063 In.)

If not, correct the valve seats as follows:

(1) If the seating is too high on the valve face, use 30˚ and 45˚ cutters to correct the seat.

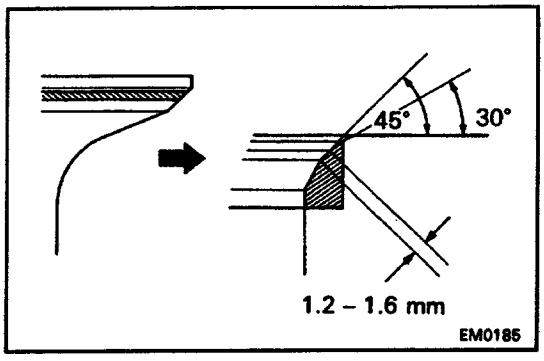

(2) If the seating is too low on the valve face, use 60˚ and 45˚ cutters to correct the seat.

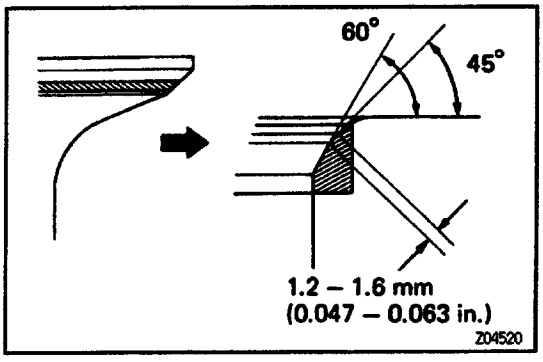

(d) Hand–lap the valve and valve seat with an abrasive compound.

(e) After hand–lapping, clean the valve and valve seat.

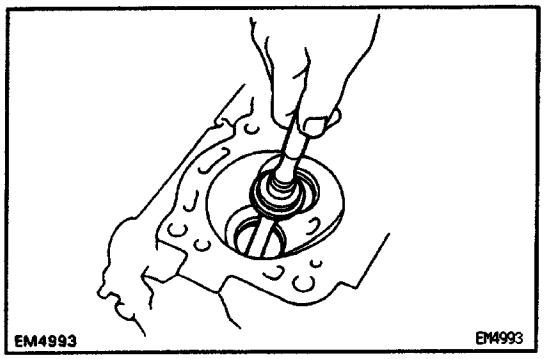

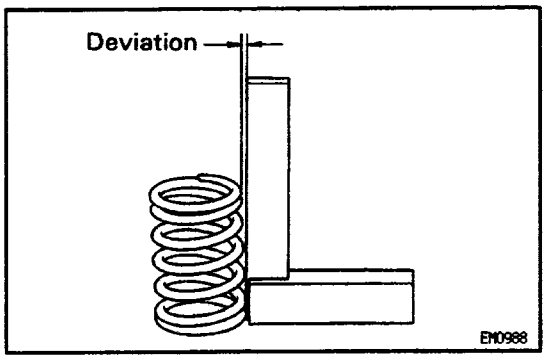

9. INSPECT VALVE SPRINGS

(a) Using a steel square, measure the deviation of the valve spring.

Maximum deviation:

1.23 mm (0.0484 in.)

If the deviation is greater than maximum, replace the valve spring.

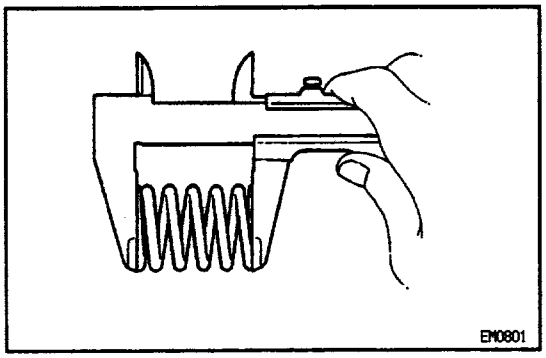

(b) Using a vernier caliper, measure the free length of the valve spring.

Free length:

White painted mark: 46.50 mm (1.8307 in.)

Green painted mark: 47.01 mm (1.8508 In.)

If the free length is not as specified, replace the valve spring.

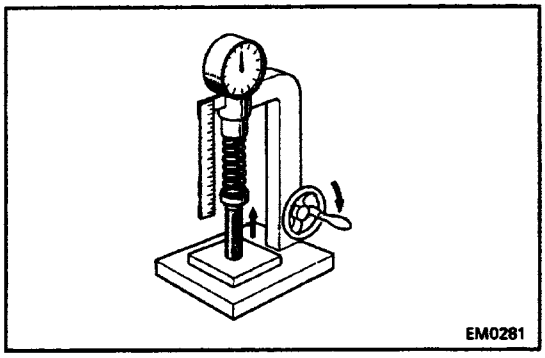

(c) Using a spring tester, measure the tension of the valve spring at the specified installed length.

Installed tension:

At 40.0 mm (1.575 In.)

242 – 268 N (24.7 – 27.3 kgf, 54.5 – 60.2 lbf)

If the installed tension is not as specified, replace the valve spring.

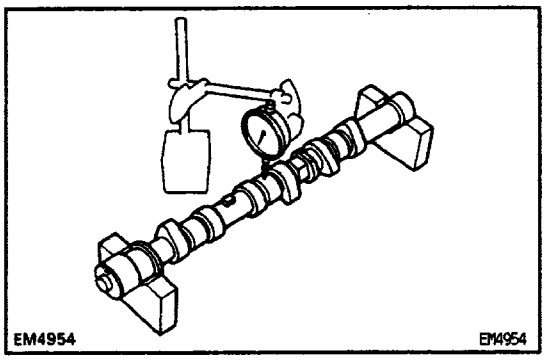

10. INSPECT CAMSHAFTS AND BEARINGS

A. Inspect camshaft for runout

(a) Place the camshaft on V–blocks.

(b) Using a dial indicator, measure the circle runout at the center journal.

Maximum circle runout:

0.06 mm (0.0024 in.)

If the circle runout is greater than maximum, replace the camshaft.

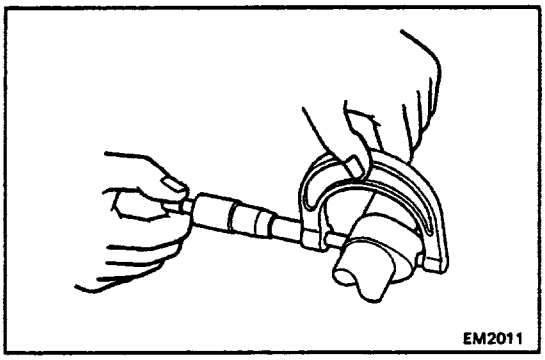

B. Inspect cam lobes

Using a micrometer, measure the cam lobe height.

Standard cam lobe height:

47.830 – 47.930 mm (1.8830 – 1.8870 in.)

Minimum cam lobe height:

47.50 mm (1.8701 In.)

If the cam lobe height is less than minimum, replace the camshaft.

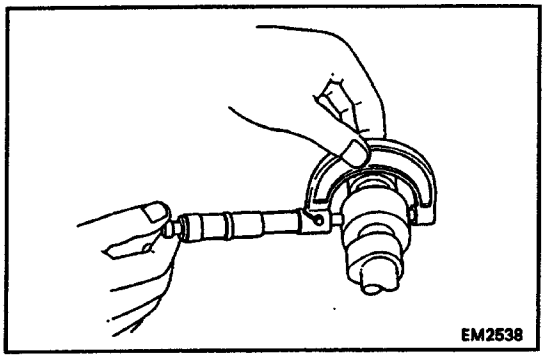

C. Inspect camshaft journals

Using a micrometer, measure the journal diameter.

Journal diameter:

33.959 – 33.975 mm (1.3370 – 1.3376 in.)

If the journal diameter is not as specified, check the oil clearance.

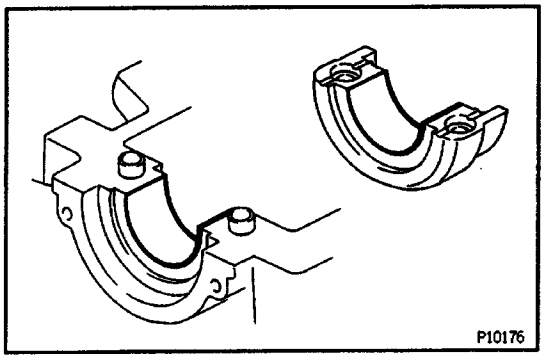

D. Inspect camshaft bearings

Check that bearings for flaking and scoring.

If the bearings are damaged, replace the bearing caps and cylinder head as a set.

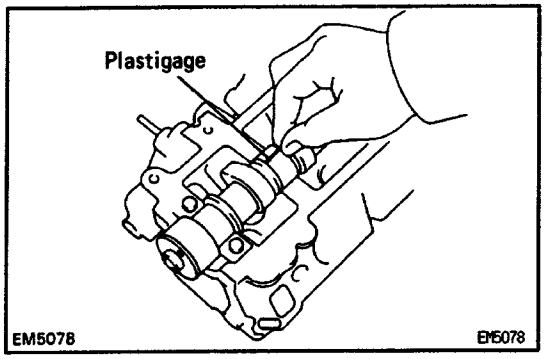

E. Inspect camshaft journal oil clearance

(a) Clean the bearing caps and camshaft journals.

(b) Place the camshafts on the cylinder head.

(c) Lay a strip of Plastigage across each of the camshaft journals.

(d) Install the bearing caps.

(See step 5 in cylinder heads installation)

Torque: 16 N–m (160 kgf–cm, 12 ft–lbf)

NOTICE: Do not turn the camshaft.

(e) Remove the bearing caps.

(f) Measure the Plastigage at its widest point.

Standard oil clearance:

0.025 – 0.066 mm (0.0010 – 0.0026 in.)

Maximum oil clearance:

0.10 mm (0.0039 in.)

If the oil clearance is greater than maximum, replace the camshaft. If necessary, replace the bearing caps and cylinder head as a set.

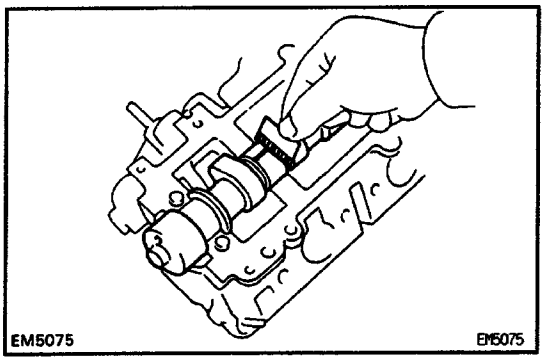

(g) Completely remove the Plastigage.

(h) Remove the camshafts.

F. Inspect camshaft thrust clearance

(a) Install the camshaft.

(See step 5 in cylinder heads installation)

(b) Using a dial indicator, measure the thrust clearance while moving the camshaft back and forth.

Standard thrust clearance:

0.080 – 0.190 mm (0.0031 – 0.0075 in.)

Maximum thrust clearance:

0.25 mm (0.0098 in.)

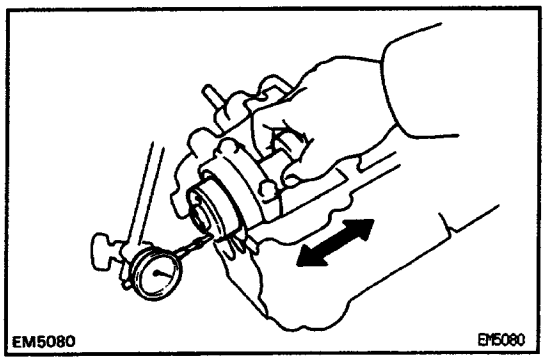

If the thrust clearance is greater than maximum, replace the camshaft. If necessary, replace the bearing caps and cylinder head as a set.

(c) Remove the camshafts.

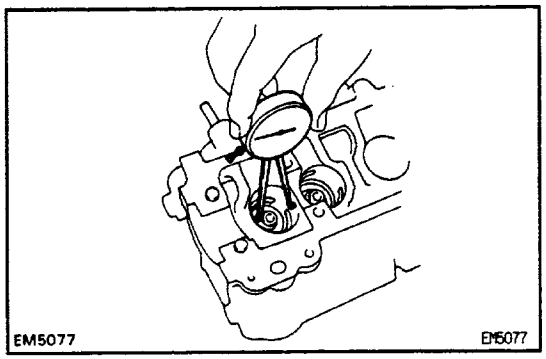

11. INSPECT VALVE LIFTERS AND LIFTER BORES

(a) Using a caliper gauge, measure the lifter bore diameter of the cylinder head.

Lifter bore diameter:

37.960 – 37.975 mm (1.4945 – 1.4951 in.)

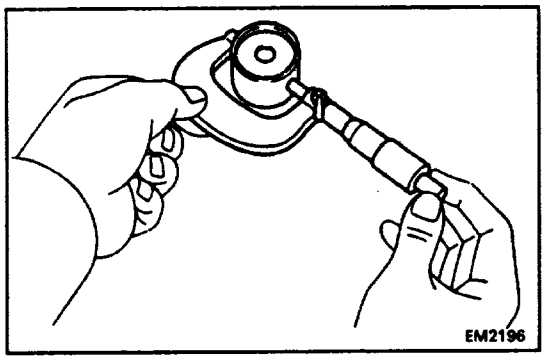

(b) Using a micrometer, measure the lifter diameter.

Lifter diameter:

37.922 – 37.932 mm (1.4930 – 1.4934 in.)

(c) Subtract the lifter diameter measurement from the lifter bore diameter measurement.

Standard oil clearance:

0.028 – 0.053 mm (0.0011 – 0.0021 in.)

Maximum oil clearance:

0.10 mm (0.0039 in.)

If the oil clearance is greater than maximum, replace the lifter. If necessary, replace the cylinder head.

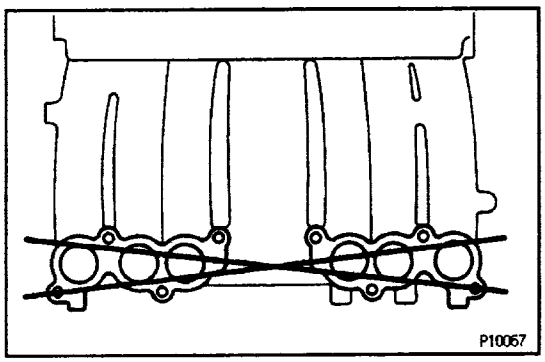

12. INSPECT AIR INTAKE CHAMBER

Using a precision straight edge and feeler gauge, measure the surface contacting the intake manifold for warpage.

Maximum warpage:

0.10 mm (0.0039 in.)

If warpage is greater than maximum, replace the chamber.

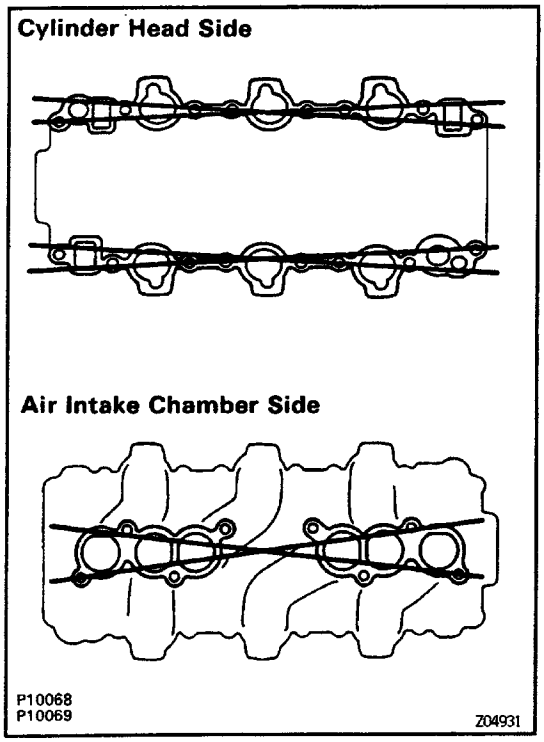

13. INSPECT INTAKE MANIFOLD

Using a precision straight edge and feeler gauge, measure the surface contacting the cylinder head and air intake chamber for warpage.

Maximum warpage:

0.10 mm (0.0039 in.)

If warpage is greater than maximum, replace the manifold.

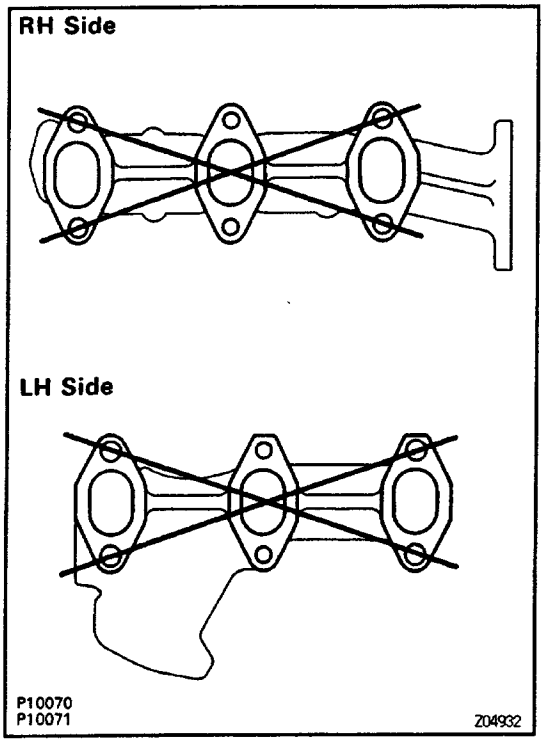

14. INSPECT EXHAUST MANIFOLD

Using a precision straight edge and feeler gauge, measure the surface contacting the cylinder head for warpage.

Maximum warpage:

0.70 mm (0.0276 in.)

If warpage is greater than maximum, replace the manifold.

E61ZY–02

CYLINDER HEADS ASSEMBLY

(See Components for Removal and Installation)

HINT:

- Thoroughly clean all parts to be assembled.
- Before installing the parts, apply new engine oil to all sliding and rotating surfaces.
- Replace all gaskets and oil seals with new ones.

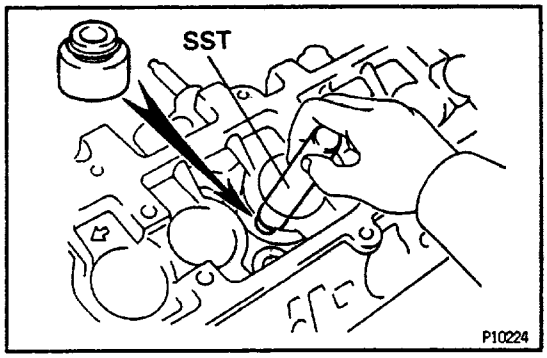

1. INSTALL VALVES

(a) Using SST, push in a new oil seal.
SST 09201–41020

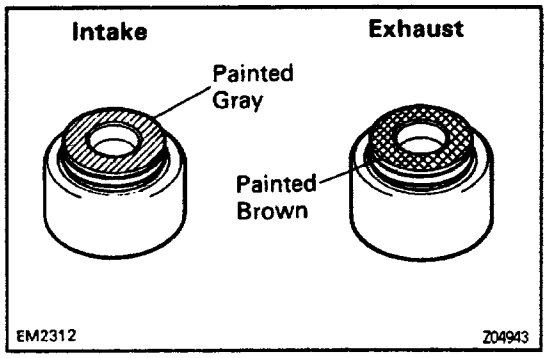

HINT: The intake valve oil seal is gray and the exhaust valve oil seal is brown.

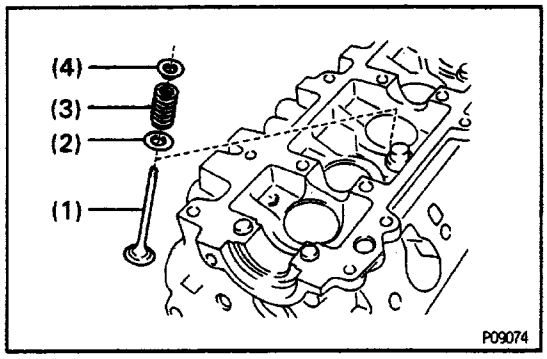

(b) Install these parts:
(1) Valve
(2) Spring seat
(3) Valve spring
(4) Spring retainer

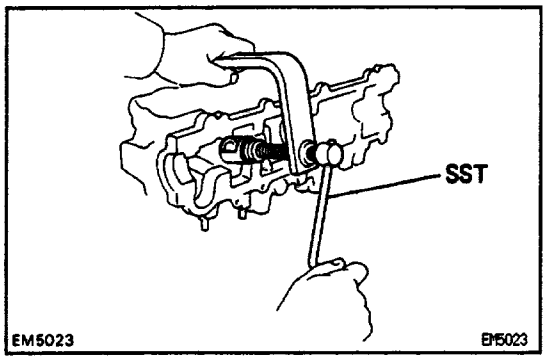

(c) Using SST, compress the valvespring and place the 2 keepers around the valve stem.
SST 09202–43013

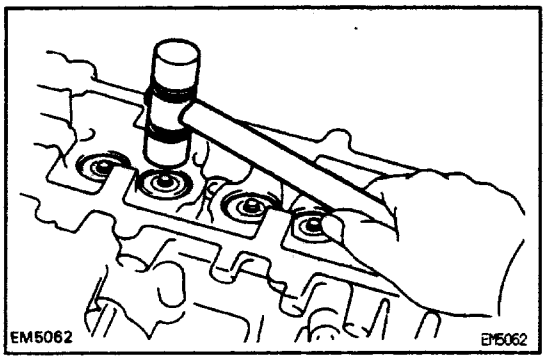

(d) Using a plastic–faced hammer, lightly tap the valve stem tip to assure proper fit.

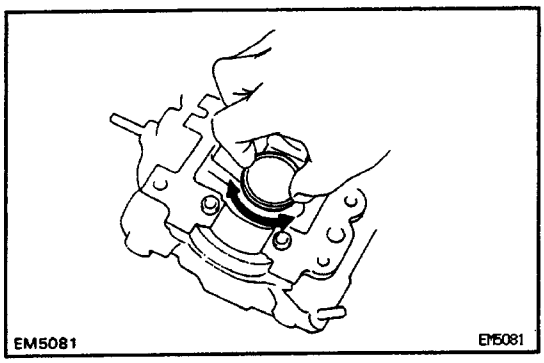

2. INSTALL VALVE LIFTERS AND SHIMS

(a) Install the valve lifter and shim.

(b) Check that the valve lifter rotates smoothly by hand.

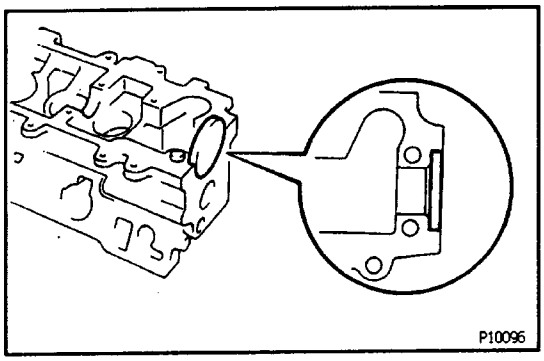

3. INSTALL CAMSHAFT HOUSING PLUGS

(a) Place a new housing plug in position on the cylinder head, facing the cup side inward.

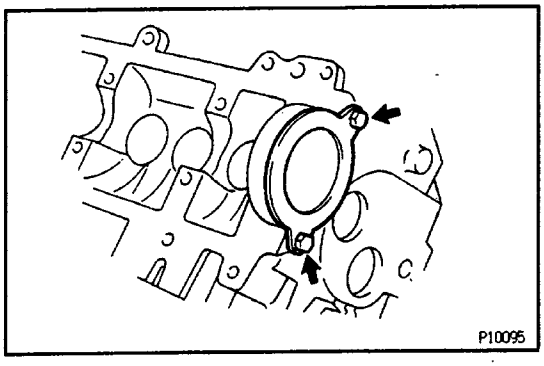

(b) Install the housing rear plate with the 2 bolts.

Torque: 4.9 N–m (50 kgf–cm, 43in.–bf)

CYLINDER HEADS INSTALLATION

(See Components for Removal and Installation)

1. INSTALL RH EXHAUST MANIFOLD TO RH CYLINDER HEAD

(a) Install a new gasket and the exhaust manifold with the 6 nuts.

Torque: 39 N–m (400 kgf–cm, 29 ft–lbf)

(b) Install the exhaust manifold heat insulator with the bolt and nut.

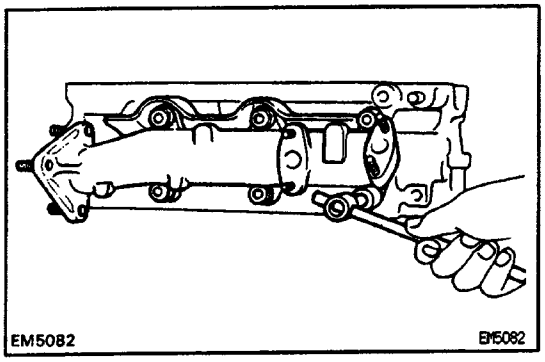

2. INSTALL RH EXHAUST MANIFOLD TO LH CYLINDER HEAD

(a) Install a new gasket and the exhaust manifold with the 6 nuts.

Torque: 39 N–m (400 kgf–cm, 29 ft–lbf)

(b) Install the exhaust manifold heat insulator with the 3 bolts.

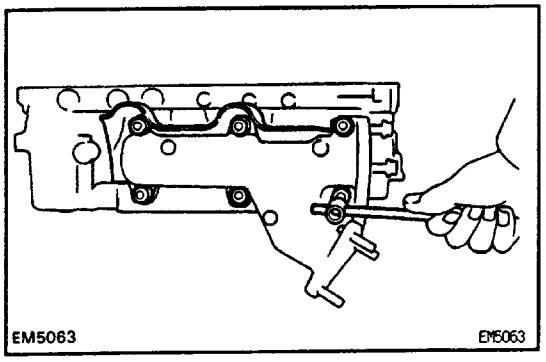

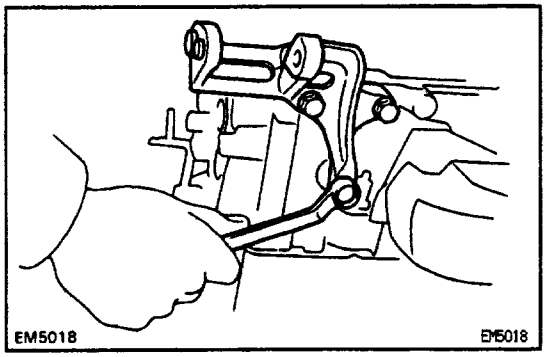

3. INSTALL GENERATOR BRACKET

Install the bracket with the 3 bolts.

Torque: 37 N–m (380 kgf–cm. 27 ft–lbf)

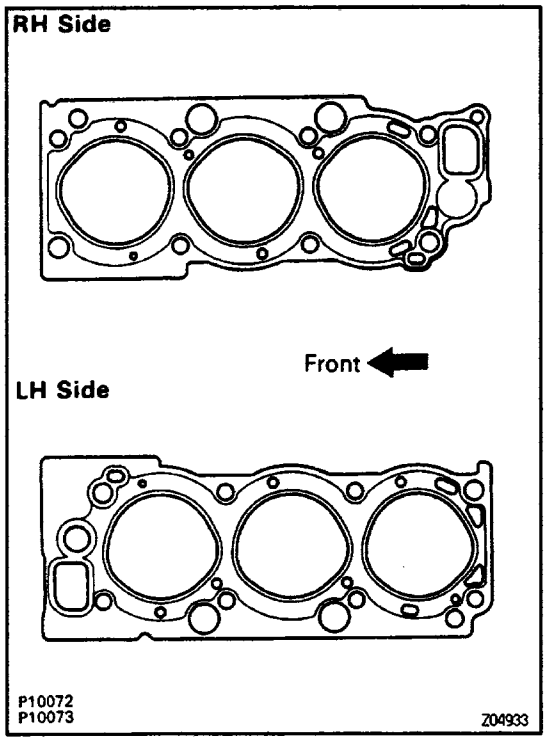

4. INSTALL CYLINDER HEADS

A. Place cylinder head on cylinder block

(a) Place 2 new cylinder head gaskets in position on the cylinder block.

NOTICE: Be careful of the installation direction.

(b) Place the 2 cylinder heads in position on the cylinder head gasket.

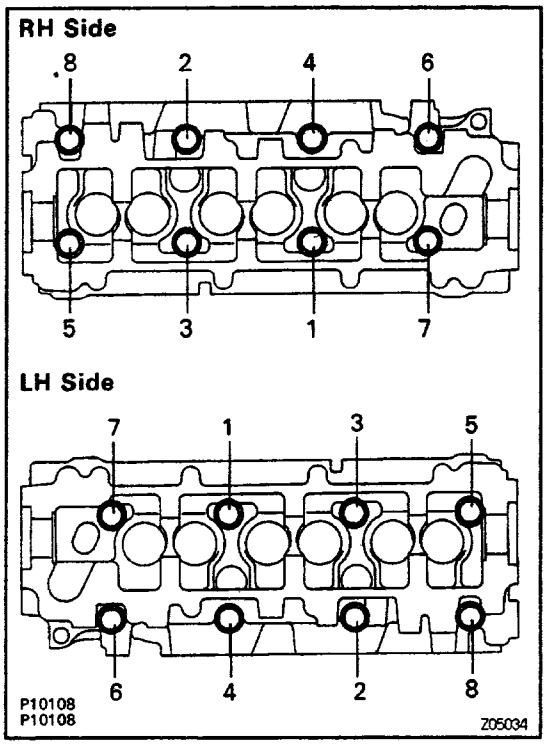

B. Install cylinder head (12 pointed head) bolts

HINT:

- The cylinder head bolts are tightened in 3 progressive steps (steps (c), (e) and (f)).
- If any bolts is broken or deformed, replace it.

(a) Apply a light coat of engine oil on the threads and under the heads of the cylinder head bolts.

(b) Install the plate washer to the cylinder head bolt.

(c) Install and uniformly tighten the 8 cylinder head bolts on each the cylinder head, in several passes, in the sequence shown, then repeat for the other side, as shown.

Torque: 44 N–m (450 kgf–cm, 33 ft–lbf)

If any of the bolts do not meet the torque specification, replace the bolt(s).

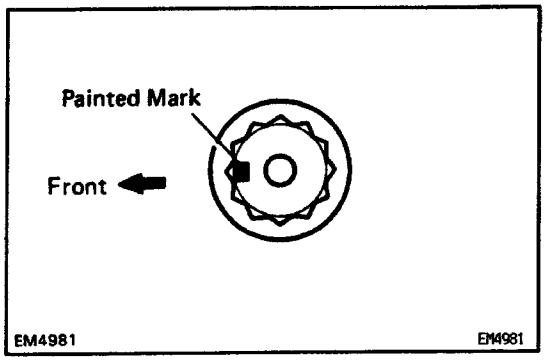

(d) Mark the front of the cylinder head bolt head with paint.

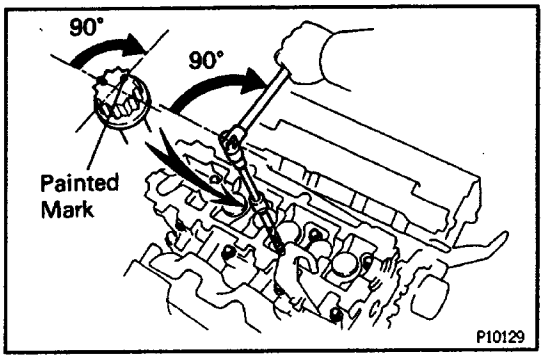

(e) Retighten the cylinder head bolts by 90° in the numerical order shown.

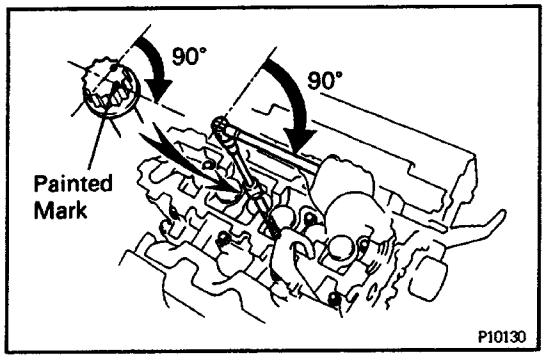

(f) Retighten cylinder head bolts by an additional 90°.
(g) Check that the painted mark is now facing rearward.

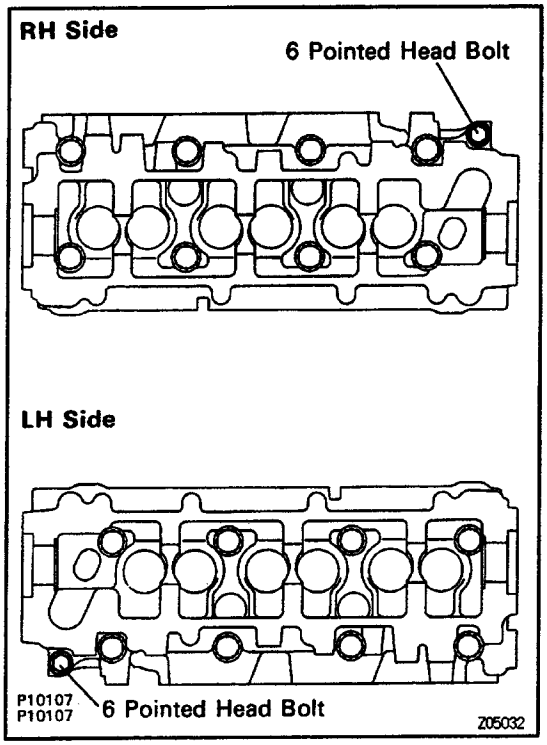

C. Install cylinder head (6 pointed head) bolts

(a) Apply a light coat of engine oil on the threads and under the heads of the cylinder head bolts.
(b) Install the cylinder head bolt to each cylinder head.
Torque: 41 N–m (420 kgf–cm, 30 ft–lbf)

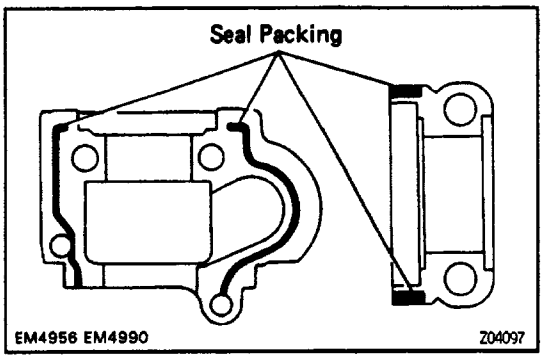

5. INSTALL CAMSHAFTS

(a) Place the camshaft on the cylinder head.

(b) Apply seal packing to the No. 1 and No.5 bearing caps as shown.

Seal packing:

Part No. 08826–00080 or equivalent

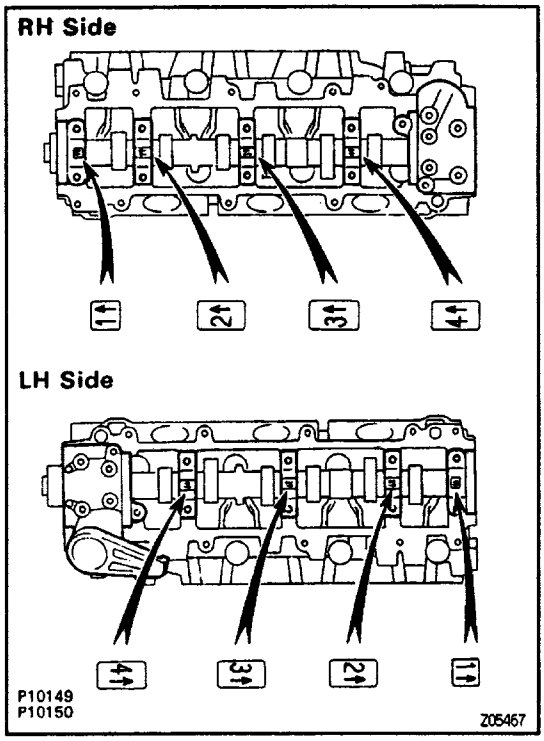

(c) Install the bearing caps in their proper locations.

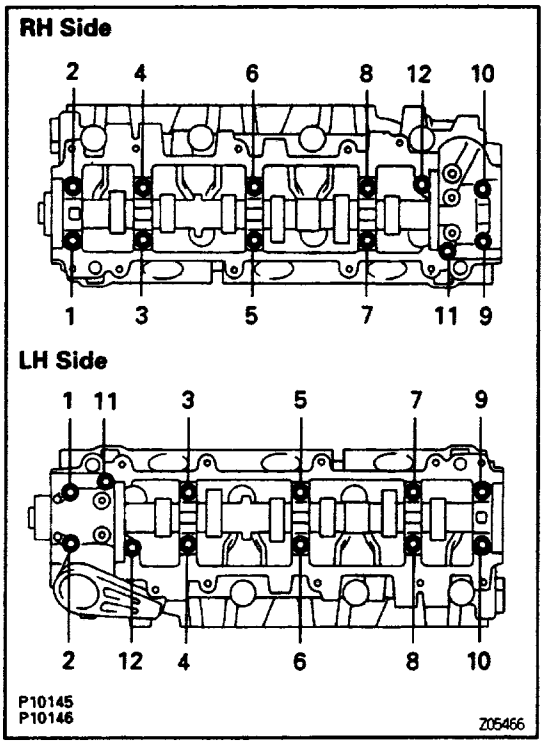

(d) Apply a light coat of engine oil on the threads and under the heads of the bearing cap bolts.

(e) Install and uniformly tighten the 12 bearing cap bolts on each cylinder head, in several passes, in the sequence shown, then repeat for the other side, as shown.

Torque: 16 N–m (160 kgf–em, 12 ft–lbf)

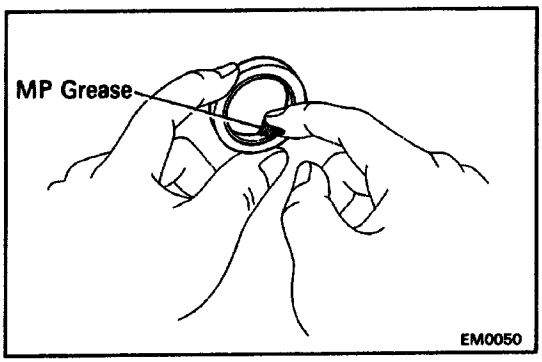

(f) Apply MP grease to a new oil seal lip.

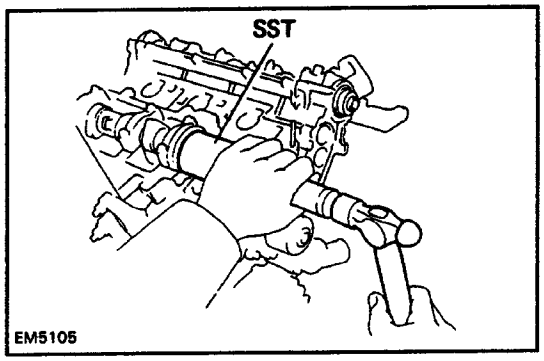

(g) Using SST, tap in the 2 camshaft oil seals.
SST 09214 – 60010

6. CHECK AND ADJUST VALVE CLEARANCE

(See steps 7 and 8 in valve clearance inspection and adjustment in tune – up)

Turn the camshaft and position the cam lobe upward, check and adjust the valve clearance.

Valve clearance (Cold):

Intake

0.18 – 0.28 mm (0.007 – 0.011 in.)

Exhaust

0.22 – 0.32 mm (0.009 – 0.013 in.)

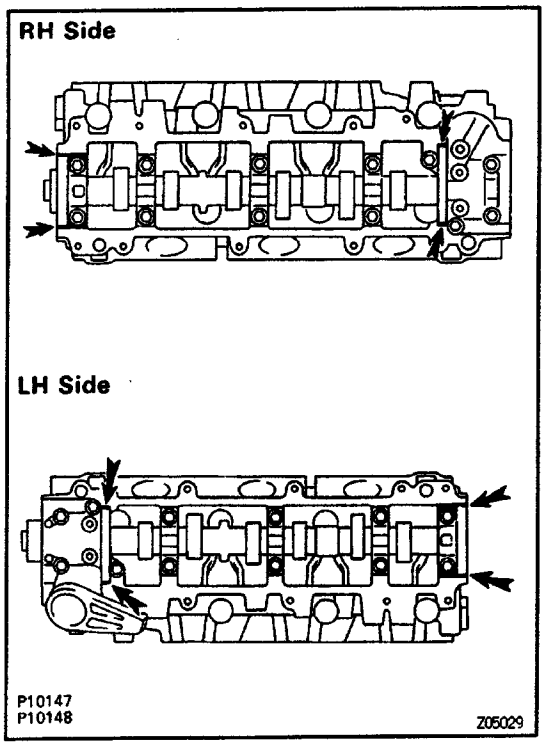

7. INSTALL CYLINDER HEAD COVERS

(a) Remove the old packing (FIPG) material.

(b) Apply seal packing to the cylinder head, as shown in the illustration.

Seal packing:

Part No. 08826–00080 or equivalent

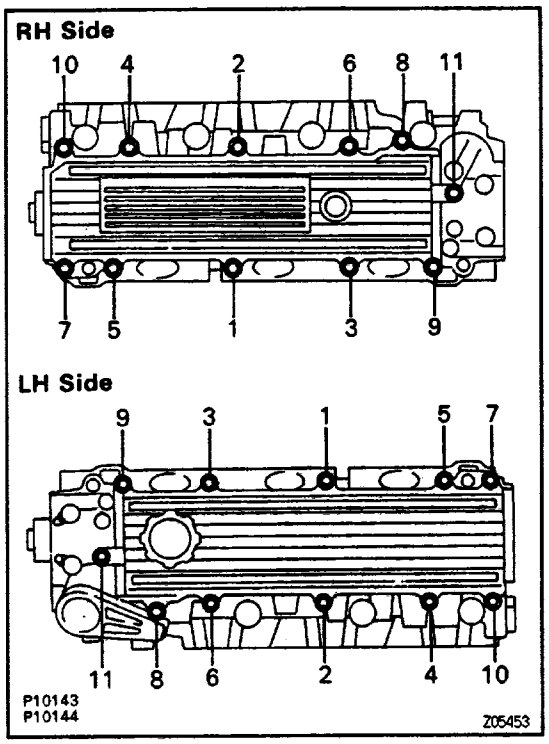

(c) Install the gasket to the head cover.
(d) Install the cylinder head cover with the 11 bolts.
Uniformly tighten the bolts one each cylinder head cover, in several passes, in the sequence shown, then repeat for the other side, as shown. Install the 2 cylinder head covers.
Torque: 5.4 N–m (55 kgf–cm, 48 in.–lbf)

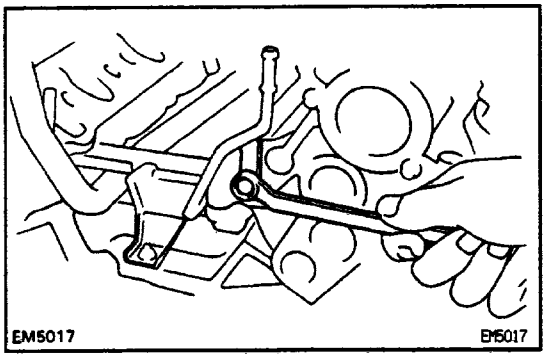

8. INSTALL WATER BYPASS PIPE TO RH CYLINDER HEAD
Install the water bypass pipe with the bolt.

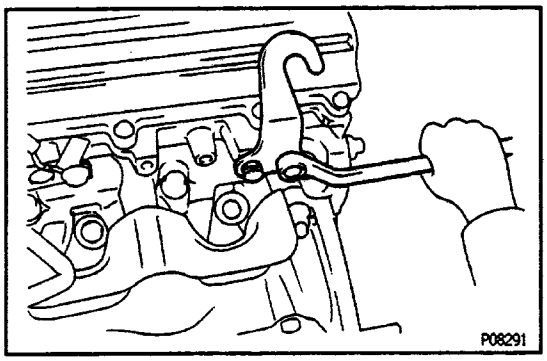

9. INSTALL No.2 ENGINE HANGER
Install the engine hanger with the 2 bolts.
Torque: 40 N–m (410 kgf–cm, 30 ft–lbf)

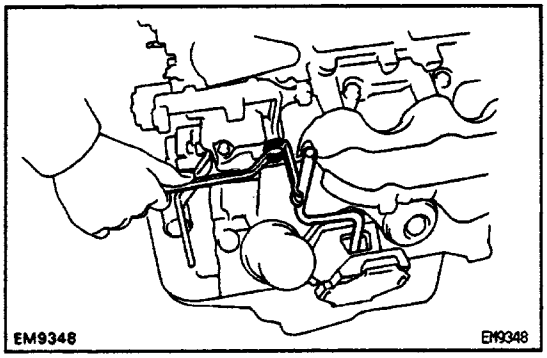

10. INSTALL OIL DIPSTICK GUIDE AND DIPSTICK
(a) Install a new 0–ring on the oil dipstick.
(b) Install the oil dipstick guide with the bolt.
Torque: 37 N–m (380 kgf–cm, 27 ft–lbf)
(c) Install the oil dipstick.
11. INSTALL GENERATOR

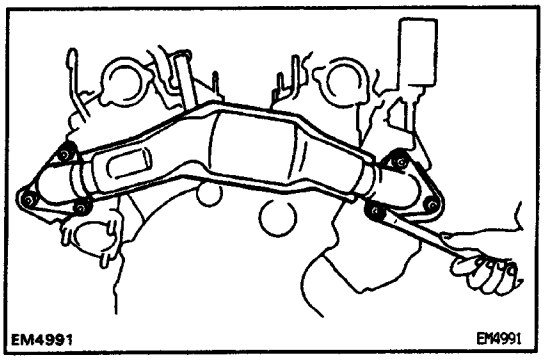

12. INSTALL EXHAUST CROSSOVER PIPE

Install 2 new gaskets and the crossover pipe with the 6 nuts.

Torque: 39 N–m (400 kgf–cm, 29 ft–lbf)

13. INSTALL KNOCK SENSOR WIRE

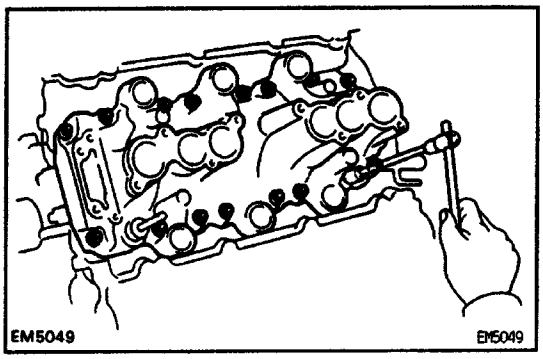

14. INSTALL INTAKE MANIFOLD

install 2 new gaskets and the intake manifold with the 12 bolts and 4 nuts.

Torque: 18 N–m (185 kgf–cm, 13 ft–lbf)

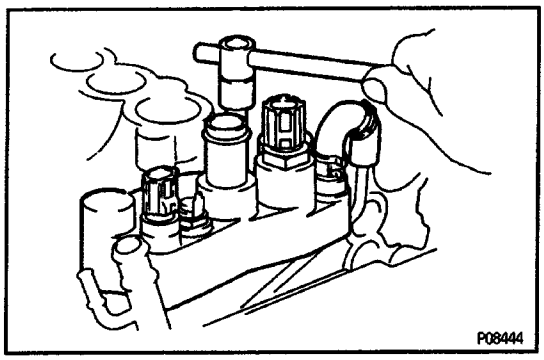

15. INSTALL WATER BYPASS OUTLET

(a) Install a new gasket and the water bypass outlet with the 2 nuts.

Torque: 18 N–m (185 kgf–cm, 13 ft–lbf)

(b) Connect the No.3 water bypass hose to the No.1 water bypass pipe.

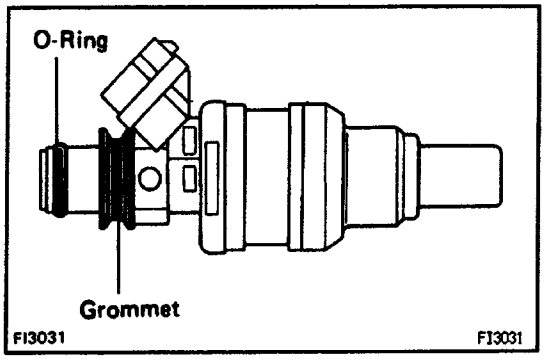

16. INSTALL INJECTORS AND DELIVERY PIPE

(a) Install a new grommet to the injector.

(b) Apply a light coat of gasoline to a new O–ring, and install it to the injector.

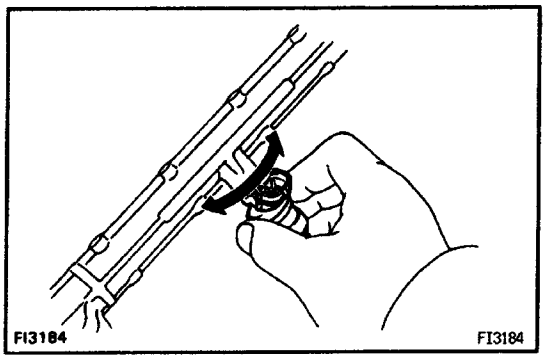

(c) While turning the injector clockwise and counter–clockwise, push it to the delivery pipe. Install the 6 injectors.

(d) Position the injector connector outward.

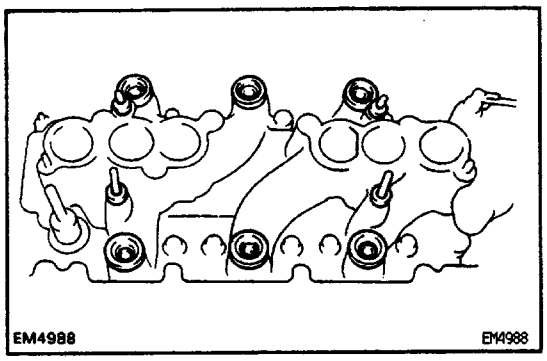

(e) Install a O–ring to the spacer.
(f) Place the 6 spacers and insulators into the injector holes.
(g) Place the 4 spacers on the stud bolts.

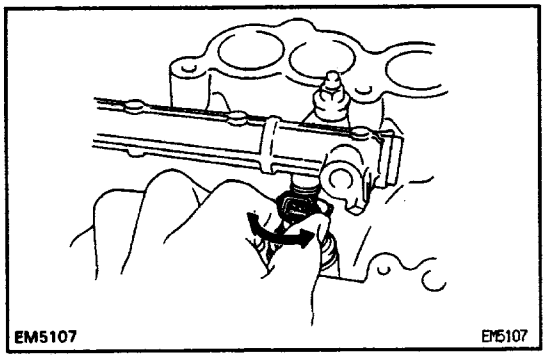

(h) Place the 2 delivery pipes together with the 6 injectors in position on the intake manifold.
(i) Temporarily install the 4 spacers and nuts.
(j) Check that the injectors rotate smoothly.
HINT: If injectors do not rotate smoothly, the probable cause is incorrect installation of O –rings. Replace the O–rings.
(k) Position the injector connector upward.

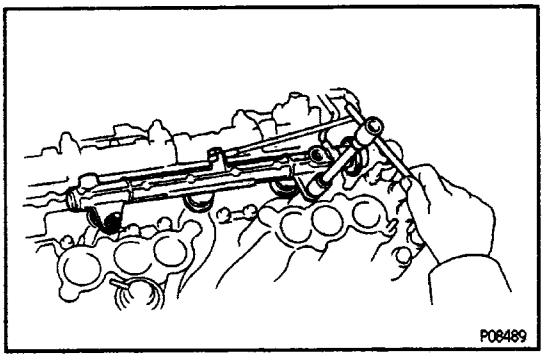

(l) Tighten the 4 nuts holding the delivery pipes to the intake manifold.
Torque: 13 N–m (130 kgf–cm. 9 ft–lbf)
(m) Install the No. 1 fuel pipe to the No.3 bearing cap with the bolt.

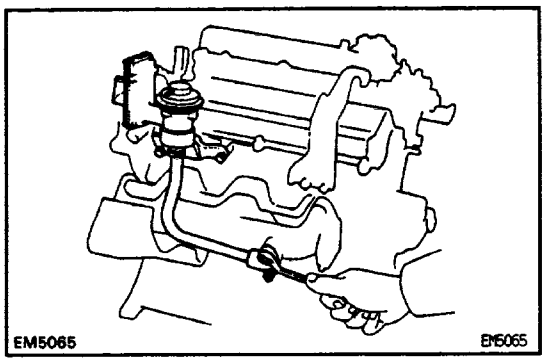

17. INSTALL PAIR REED VALVE AND NO.1 INJECTION MANIFOLD
(a) Position a new gasket on the RH exhaust manifold.
(b) Install the PAIR reed valve and injection manifold assembly with the 2 nuts and 2 bolts.
Torque:
Bolt: 37 N–m (380 kgf –cm, 27 ft–lbf)
Nut: 29 N–m (300 kgf–cm, 22 ft–lbf)

18. INSTALL VSV BRACKET AND VSV TO PAIR REED VALVE

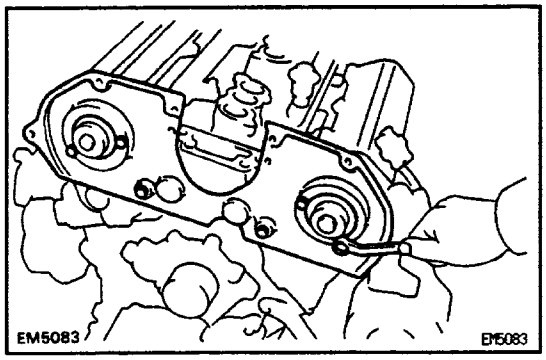

19. INSTALL NO.3 TIMING BELT COVER
Install the timing belt cover with the6 bolts.
Torque: 8.3 N–m (85 kgf–cm, 74 in.–lbf)

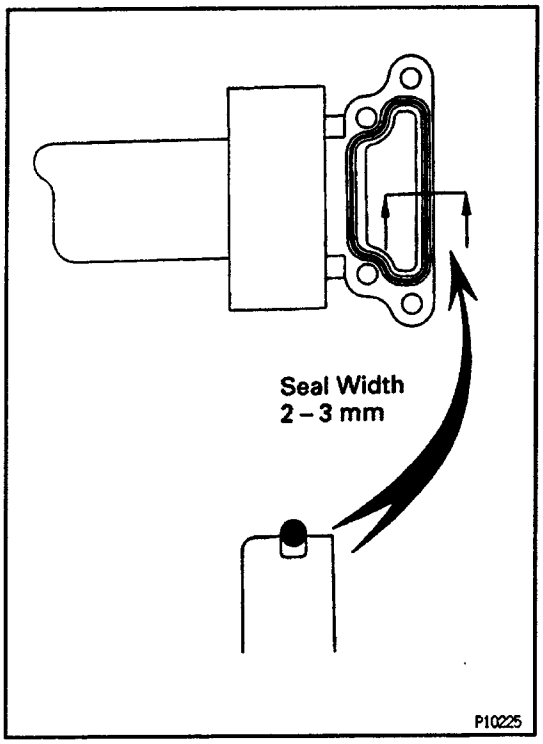

20. INSTALL NO.2 IDLER PULLEY

(a) Remove any old packing (FIPG) material and be careful not to drop any oil on the contact surfaces of the water outlet housing on the No.2 idler pulley and the intake manifold.

- Using a razor blade and gasket scraper, remove all the old packing (FIPG) material from the gasket surfaces and sealing groove.
- Thoroughly clean all components to remove all the loose material.
- Using a non–residue solvent, clean both sealing surfaces.

(b) Apply seal packing to the sealing groove of the water outlet housing on the idler pulley as shown in the illustration.

Seal packing:

Part No. 08826–00100 or equivalent

- Install a nozzle that has been cut to a 2 – 3 mm (0.08 – 0.12 in.) opening.
- Parts must be assembled within 5 minutes of application. Otherwise the material must be removed and reapplied.
- Immediately remove nozzle from the tube and reinstall cap.

(c) Install the idler pulley with the 4 bolts. Uniformly tighten the bolts in several passes.

Torque: 18 N–m (185 kgf–cm, 13 ft–lbf)

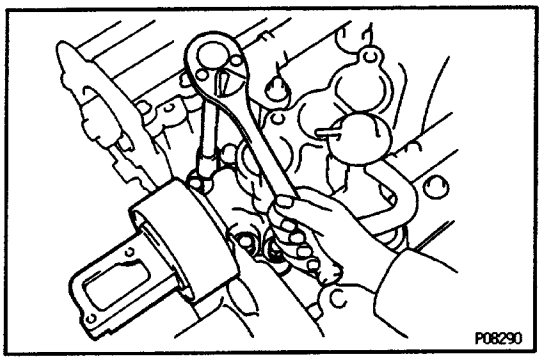

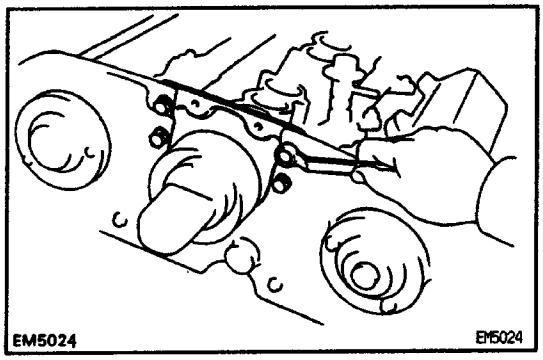

21. INSTALL NO.4 TIMING BELT COVER

Install the timing belt cover with the 4 bolts.

Torque: 8.3 N–m (85 kgf–cm 74 in.–lbf)

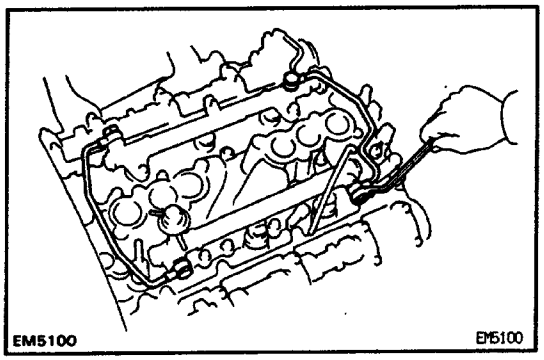

22. INSTALL NO.2 AND NO.3 FUEL PIPES

(a) Install the No.2 fuel pipe with 4 new gaskets and 2 union bolts.

Torque: 34 N–m (350 kgf–cm, 25 ft–lbf)

(b) Install the No.3 fuel pipe with 4 new gaskets and 2 union bolts.

Torque: 34 N–m (350 kgf–cm. 25 ft–lbf)

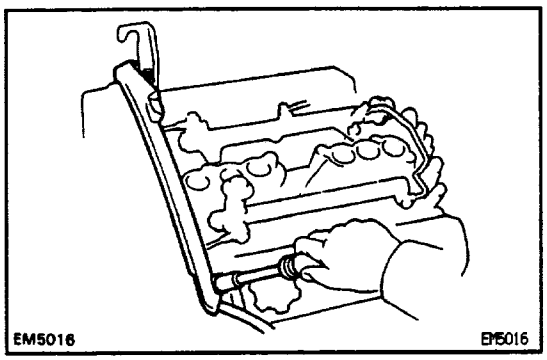

23. INSTALL ENGINE WIRE

(a) Install the engine wire with the 2 bolts.

(b) Connect these connectors and strap:

- Injector connectors
- RH ground strap
- ECT sender gauge connector
- ECT sensor connector
- No.2 ECT switch connector
- Cold start injector time switch connector
- Knock sensor connector

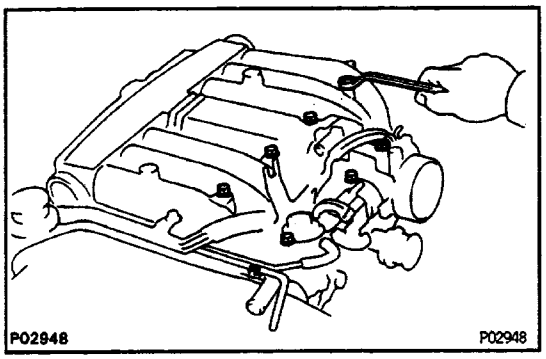

24. INSTALL AIR INTAKE CHAMBER

(a) Install a new gasket and the intake chamber with the 6 bolts and 2 nuts.
Torque: 18 N–m (185 kgf–cm, 13 ft–lbf)

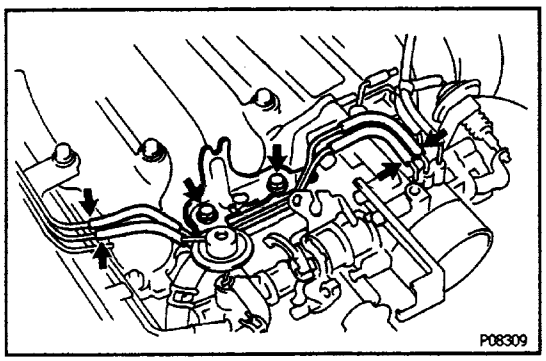

(b) Install the accelerator cable bracket with the 2 bolts.

(c) Connect the 4 vacuum hoses to the air pipes.

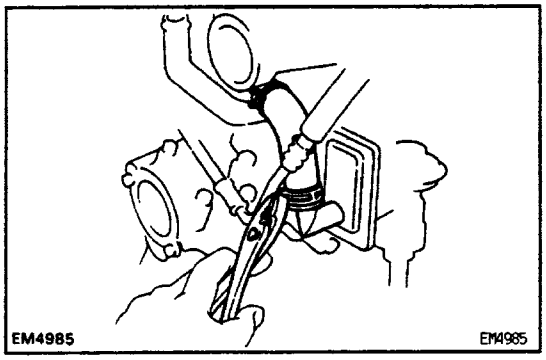

(d) Connect the No. 1 air hose to the reed valve.

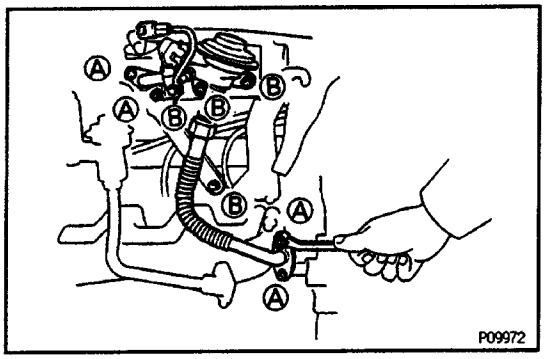

(e) Install 2 new gaskets, the EGR valve, pipes assembly, air intake chamber stay and throttle cable bracket with the6 nuts and 2 bolts.

Torque:

(A): 29 N–m (300 kgf–cm, 22 ft–lbf)

(B): 18 N–m (185 kgf.cm, 13 ft–lbf)

(f) Connect the EGR hoses to the air pipe and EGR vacuum modulator.

(g) Connect the EGR gas temperature sensor connector.

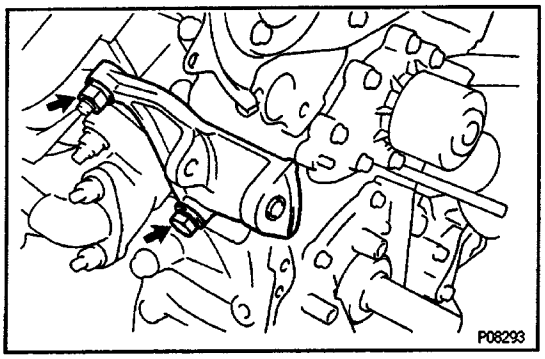

(h) Install the PS pump bracket with the bolt and nut.

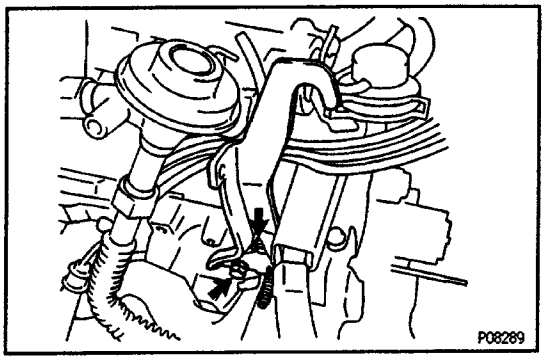

(i) Install No.1 engine hanger.

Torque: 40 N–m (410 kgf–cm, 30 ft–lbf)

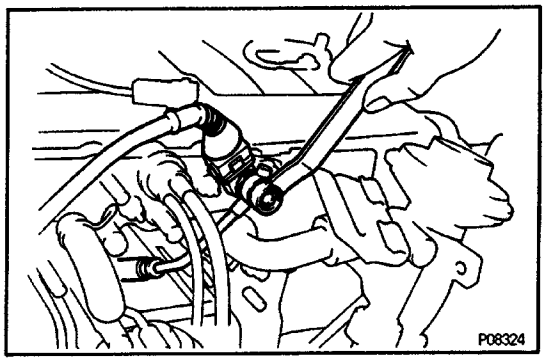

(j) Connect the cold start injector tube with 2 new gaskets and the union bolt.

Torque: 15 N–m (150 kgf–cm. 11 ft–lbf)

(k) Connect the vacuum hose to the gas filter.

(1) Connect the cold start injector connector.

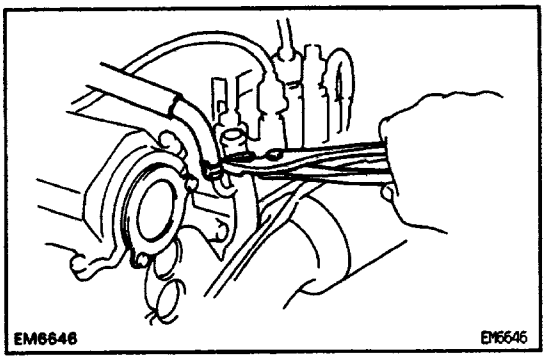

(m) Install the No. 5 water bypass hose to the water bypass pipe.

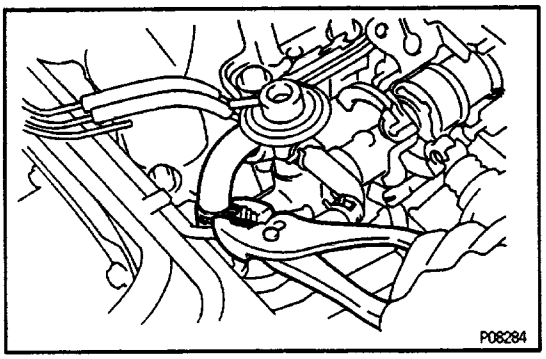

(n) Connect the No.4 water bypass hose to the union of intake manifold.

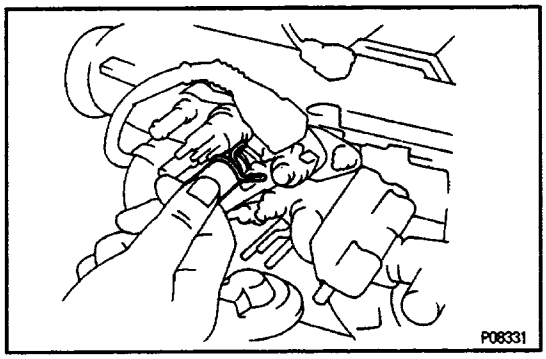

(o) Connect the PCV hose to the union.

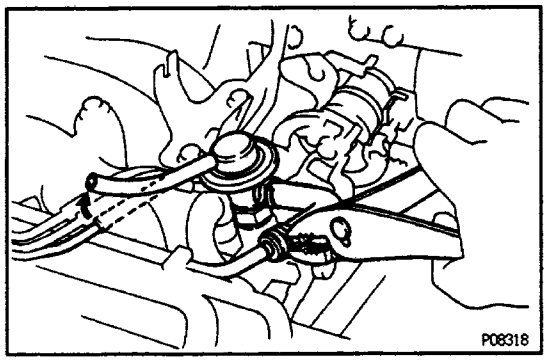

(p) Connect the vacuum and fuel hoses to the pressure regulator.
(q) Connect the charcoal canister vacuum hose to the throttle body.
(r) Connect the throttle position sensor connector.

26. INSTALL TIMING BELT
(See timing belt installation in timing belt)
26. INSTALL DISTRIBUTOR
(See steps 1 and 2 in distributor installation ”in distributor in Ignition System (3VZ–E))
27. CONNECT HIGH–TENSION CORDS TO SPARK PLUGS

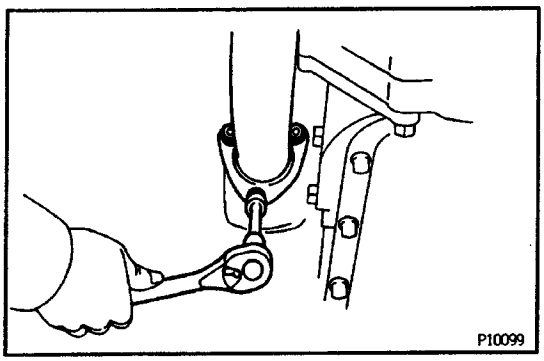

28. INSTALL FRONT EXHAUST PIPE

(a) Connect the exhaust pipe to the LH exhaust manifold with new gasket and 3 new nuts.
Torque: 62 N–m (630 kgf–cm, 46 ft–lbf)

(b) Connect the exhaust pipe to the catalytic converter with new gasket and the 2 bolts.
Torque: 39 N–m (400 kgf–cm, 29 ft–lbf)

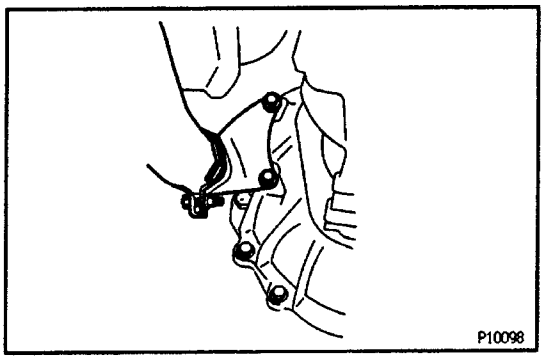

(c) Install the pipe bracket to the transmission with the 2 bolts.

(d) Install the pipe bracket to the exhaust pipe with the pipe clamp.

(e) Connect the heated oxygen sensor connector.

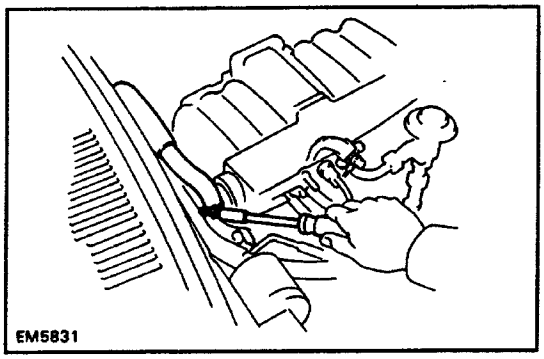

29. CONNECT FUEL INLET AND OUTLET HOSES

30. CONNECT HEATER HOSES

31. CONNECT CABLES, HOSES, CONNECTORS, STRAP AND WIRES

(a) Connect these cables:

- Accelerator cable
- A/T only:
  Throttle cable
- w/ Cruise Control System:
  Cruise control cable

(b) Connect these hoses:

- PS air hoses to gas filter and air pipe
- Brake booster hose
- w/ Cruise Control System:
  Cruise control vacuum hose
- Charcoal canister hose from canister
- VSV vacuum hoses

(c) Connect the strap, wires and connectors:

- Ground strap to LH fender apron
- Generator connector and wire
- Igniter connector

- Oil pressure sender gauge connector
- Ground strap to engine rear side
- ECM connectors
- VSV connectors
- A/C compressor connector
- M/T only:
  Starter relay connector
- Solenoid resister connector
- DLC1
- w/ ADD:
  ADD switch connector

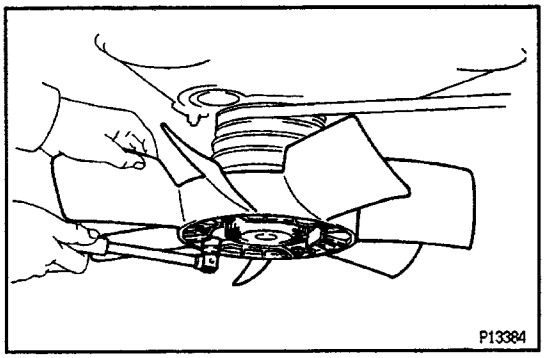

32. INSTALL GENERATOR DRIVE BELT

33. INSTALL COOLING FAN

Install the cooling fan with the 4 nuts.

Torque: 5.4 N–m (55 kgf.cm, 48 in.–lbf)

34. INSTALL A/C DRIVE BELT

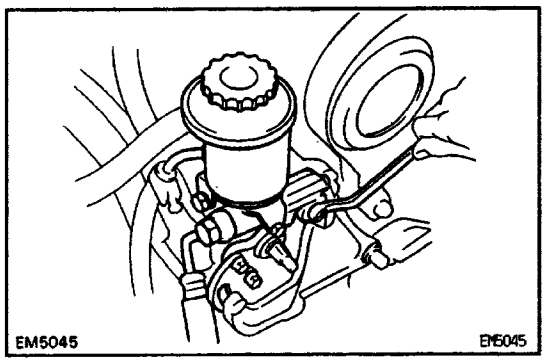

35. INSTALL PS PUMP

36. INSTALL PS PUMP PULLEY AND DRIVE BELT

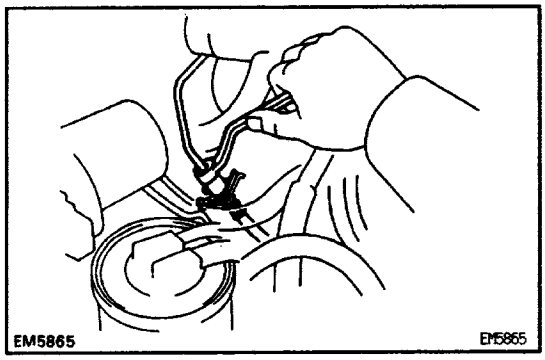

37. M/T only:

CONNECT CLUTCH RELEASE CYLINDER HOSE

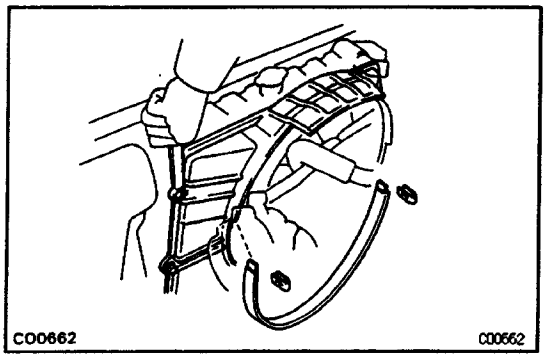

38. INSTALL RADIATOR

(a) Install the radiator with the 4 bolts.
(b) Install the No. 1 fan shroud with the 4 bolts.
(c) Install the No.2 fan shroud with the 2 clips.

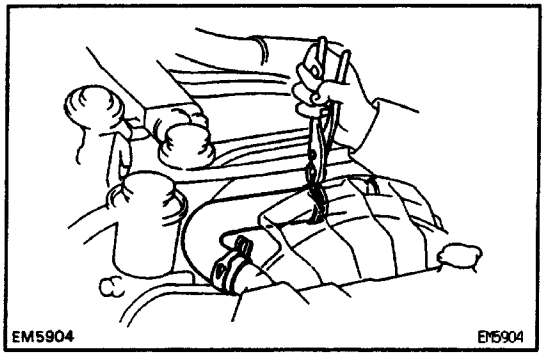

(d) Install the radiator hoses.
(e) A/T only:
Connect the oil cooler hoses.
(f) Connect the reservoir hose.

39. INSTALL AIR CLEANER AND HOSE
40. FILL WITH ENGINE COOLANT
41. START ENGINE AND CHECK FOR LEAKS
42. PERFORM ENGINE ADJUSTMENT
(See tune–up)
43. ROAD TEST VEHICLE
Check for abnormal noise, shock, slippage, correct shift points and smooth operation.
44. RECHECK ENGINE COOLANT LEVEL AND OIL LEVEL

3VZ–E ENGINE

ENGINE MECHANICAL

DESCRIPTION

EG1ZS–02

The 3VZ–E engine is a V–6 3.0 liter OHC 12–valve engine.

OPERATION

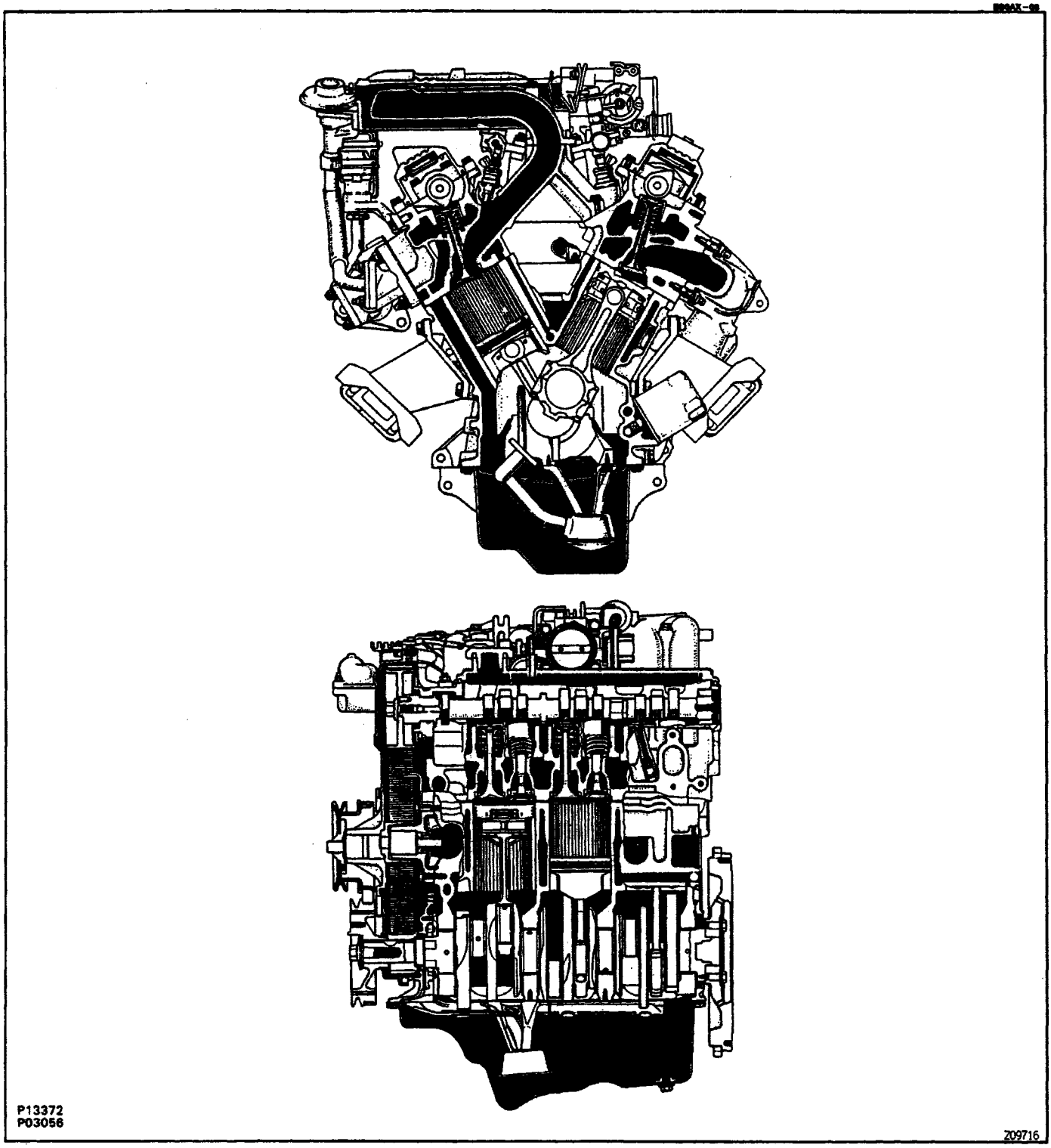

EXHAUST SYSTEM

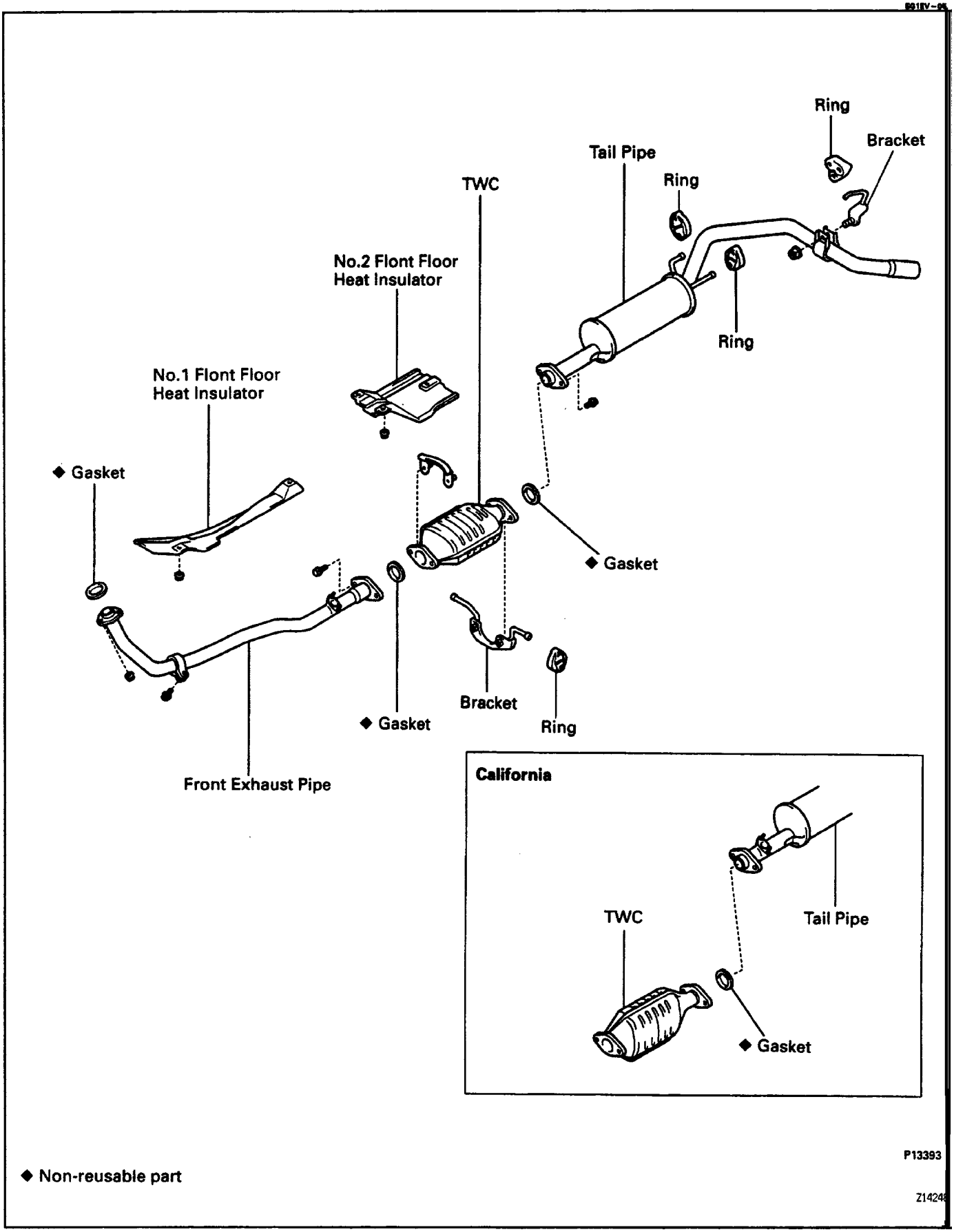

IDLE AND OR 2500 RPM CO HC CHECK

HINT: This check is used only to determine whether or not the idle CO/HC complies with regulations.

1. INITIAL CONDITIONS

(a) Engine at normal operating temperature
(b) Air cleaner installed
(c) All pipes and hoses of air induction system connected
(d) All accessories switched OFF
(e) All vacuum lines properly connected

HINT: All vacuum hoses for EGR systems, etc. should be properly connected.

(f) MFI system wiring connectors fully plugged
(g) Ignition timing set correctly
(h) Idle speed set correctly
(i) Transmission in neutral position
(j) Tachometer and CO/HC meter calibrated by hand

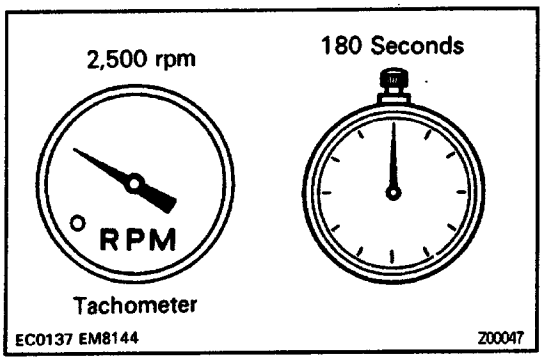

2. START ENGINE

3. RACE ENGINE AT 2,500 RPM FOR APPROX. 180 SECONDS

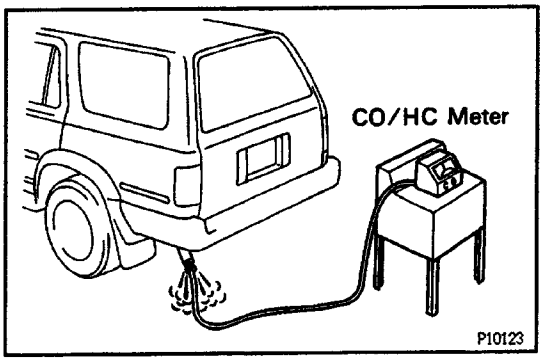

4. INSERT CO/HC METER TESTING PROBE AT LEAST 40 cm (1.3 ft) INTO TAILPIPE DURING IDLING

5. IMMEDIATELY CHECK CO/HC CONCENTRATION AT IDLE AND/OR 2,500 RPM

HINT: When doing the 2 mode (2,500 rpm and idle) test, follow the measurement order prescribed by the applicable local regulations.

Troubleshooting

If the CO/HC concentration does not comply with regulations, troubleshoot in the order given below.

(a) Check heated oxygen sensor operation.
(See heated oxygen sensor in MFI System)

(b) See the table below for possible causes, and then inspect and correct the applicable causes if necessary.

CO	HC	Phenomenon	Causes
Normal	High	Rough idle	1. Faulty ignitions: • Incorrect timing • Fouled, shorted or improperly gapped plugs • Open or crossed high–tension cords • Cracked distributor cap 2. Incorrect valve clearance 3. Leaky EGR valve 4. Leaky intake and exhaust valves 5. Leaky cylinder
Low	High	Rough idle (Fluctuating HC reading)	1. Vacuum leaks: • PCV hose • EGR valve • Intake manifold • Air intake chamber • Throttle body • Brake booster line 2. Lean mixture causing misfire
High	High	Rough idle (Black smoke from exhaust)	1. Restricted air filter 2. Plugged PCV valve 3. PAIR system problems 4. Faulty MFI systems: • Faulty pressure regulator • Clogged fuel return line • Defective ECT sensor • Defective intake air temperature sensor • Faulty ECM • Faulty injector • Faulty cold start injector • Faulty throttle position sensor • Faulty volume air flow meter

V04005

ENGINE MECHANICAL

DESCRIPTION

EG1ZS–02

The 3VZ–E engine is a V–6 3.0 liter OHC 12–valve engine.

OPERATION

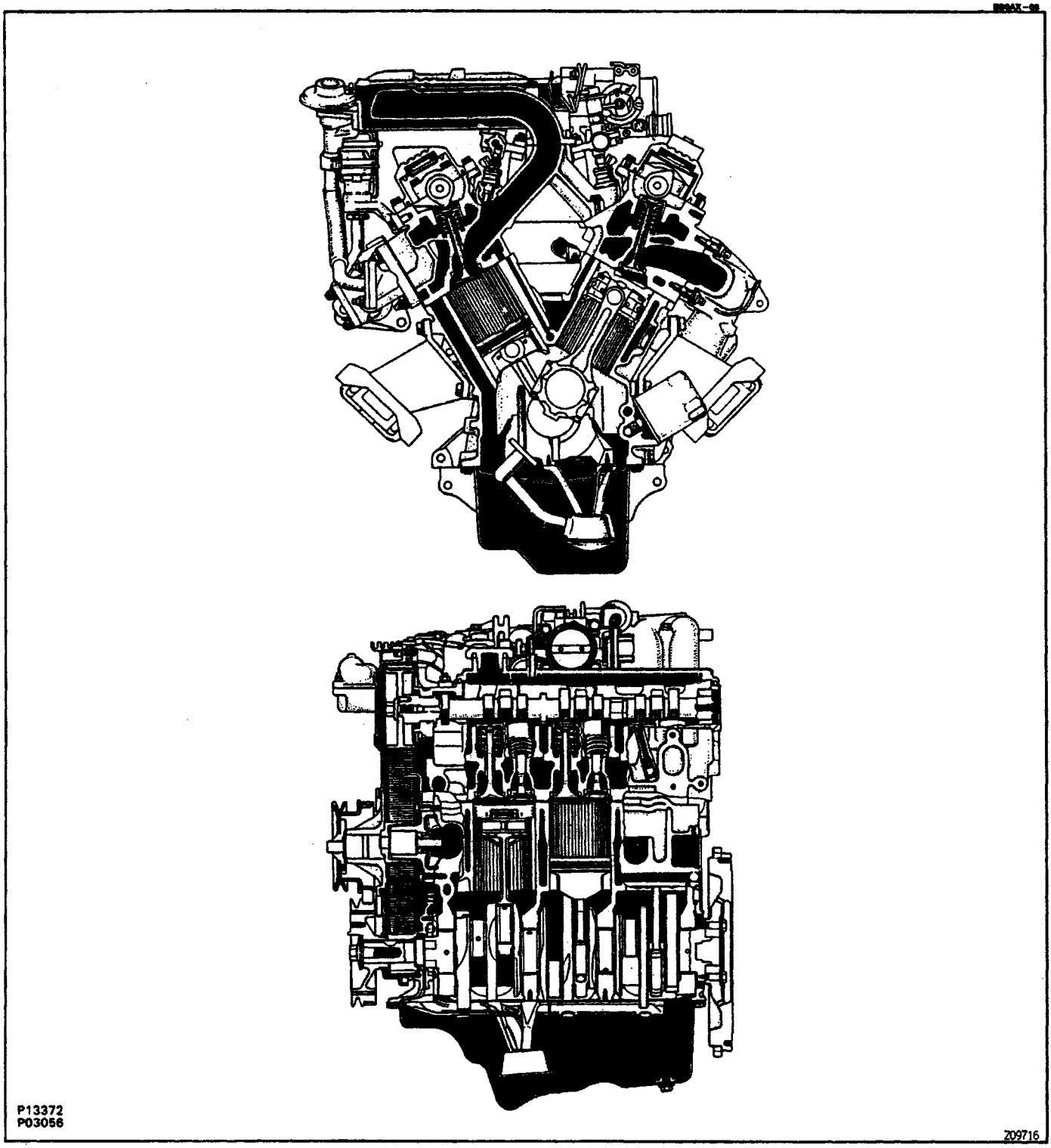

The 3VZ–E engine has 6–cylinders in a V arrangement at a bank angle of 60˚. From the front of the right bank the cylinders are numbered 1 – 3 – 5, and from the front of the left bank the cylinders are numbered 2 – 4 – 6.
The crankshaft is supported by 4 bearings inside the crankcase. The bearings are made of aluminum alloy.
The crankshaft is integrated with 5 weights which are cast with it for balance. There are oil holes in the center of the crankshaft to supply oil to the connecting rods and bearings, etc.
The firing order is 1 – 2 – 3 – 4 – 5 – 6. The cylinder head is made of aluminum alloy, with a cross flow type intake and exhaust layout, and semi–heron type combustion chambers.
At the front and rear of the intake port of the intake manifold, a water passage has been provided which connects the left and right cylinder heads.
Each intake and exhaust valve is equipped with irregular pitch springs made of special valve spring carbon steel which are capable–of following the cam profile at all engine speeds.
The left and right camshafts are driven by a single timing belt. The cam journal is supported at 5
places, between the valve lifters of each cylinder and on the front end of the cylinder head.
The cam journal and the cam are lubricated by oil supplied through the oiler port in the center of the camshaft.
Adjustment of the valve clearance is done by means of an outer shim type system with the valve adjusting shims located above the valve lifters so that the shims can be replaced without removing the camshafts.
No.1 and No.2 timing belt covers are made of resin above and below the fan bracket. No.3 and No.4 timing belt covers are made of sheet steel to make removal of the intake manifold easier.
The pistons are made of high temperature resistant aluminum alloy, and the piston head is concaved to prevent interference with the valves.
The piston pins are the semi–floating type, with the connecting rods and pins pressure fitted so that the piston and pin float.
The No. 1 compression– ring is made of stainless steel and the No.2 compression ring is made of cast iron. The oil ring is made of a combination of steel and stainless steel. The outer diameter of each piston ring is slightly larger than the diameter of the piston, and when the piston ring is attached to the cylinder, the expansion of the piston ring produces a close fit with the cylinder wails.
The No.1 and No.2 compression rings work to prevent gas leakage, and the oil ring works to scrape oil off the cylinders and prevent it from entering the combustion chambers.
The cylinder block is made of cast iron with a bank angle of 60˚. It has 6 cylinders which are approximately twice the length of the piston stroke. The top of each cylinder is closed off by the cylinder head and the lower end becomes the crankcase where the crankshaft is installed. In addition, the cylinder block contains a water jacket to cool the cylinders.
The –oil pan is bolted onto the bottom of the cylinder block. The oil pan is an oil reservoir made of pressed sheet steel. A baffle plate has been installed between the oil pan and cylinder block to reduce oil stir from the crankshaft and connecting rod.
Plastic region tighten bolts are used for the cylinder head, main bearing cap and connecting rod.

PREPARATION

SST (SPECIAL SERVICE TOOLS)

	**09032–00100** Oil Pan Seal Cutter	Oil pan Oil pan baffle plate
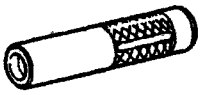	**09201–41020** Valve Stem 09 Seal Replacer	
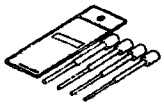	**09201–10000** Valve Guide Bushing Remover & Replacer Set	
	**09202–43013** Valve Spring Compressor	
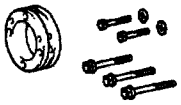	**09213–58012** Crankshaft Pulley Holding Tool	
	**(90201–08131)** Washer	
	**(91111–50845)** Bolt	
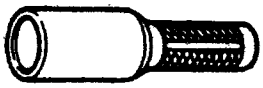	**09214–60010** Crankshaft Pulley & Gear Replacer	Crankshaft timing pulley Camshaft oil seal
	**09221–25024** Piston Pin Remover & Replacer	
	**(09221–00020)** Body	
	**(09221–00030)** Spring	
	**(09221–00181)** Bushing 'E'	
	**(09221–00190)** Guide 'K'	

	(09221–00200) Guide “L”	
	09223–15030 Oil Seal & Bearing Replacer	
	09248–55040 Valve Clearance Adjust Tool Set	
	(09248–05410) Valve Lifter Press	
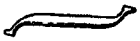	(09248–05420) Valve Lifter Stopper	
	09309–37010 Transmission Bearing Replacer	Crankshaft front oil seat
	09330–00021 Companion Flange Holding Tool	Crankshaft pulley
	09608–35014 Axis Hub & Drive Pinion Bearing Tool Set	
	(09608–06020) Handle	Valve guide bushing Crankshaft rear oil seal
	09816–30010 Oil Pressure Switch Socket	Oil pressure sender gauge
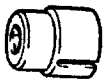	09817–16011 Back–up Light Switch Tool	Knock sensor
	09843–18020 Diagnosis Check Wire	
	09950–50010 Puller C Set	
	09960–10010 Variable Pin Wrench Set	Camshaft timing pulley

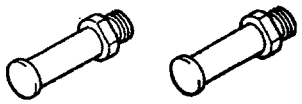	(09963–01000) Pin 10	

RECOMMENDED TOOLS

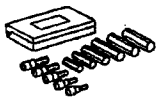	09040–00010 Hexagon Wrench Set.	
	09090–04010 Engine Sling Device.	For suspending engine
	09200–00010 Engine Adjust Kit.	
	09258–00030 Hose Plug Set.	Plug for the vacuum hose, fuel hose etc.
	09904–00010 Expander Set.	

EQUIPMENT

Battery specific gravity gauge	
Belt tension gauge	
Caliper gauge	
C4/HC meter	
Compression gauge	
Connecting rod aligner	
Cylinder gauge	
Dial indicator	
Dye penetrant	
Engine tune –up tester	
Heater	
Magnetic finger	

Micrometer	
Piston ring compressor	
Piston ring expander	
Plastigage	
Precision straight edge	
Soft brush	
Spring tester	Valve spring
Steel square	Valve spring
Thermometer	
Torque wrench	
Valve seat cutter	
Vernier calipers	

COOLANT

Item		Capacity	Classification
Coolant (w/ Heater)	M/T	**10.0 liters (10.6 US qts, 8.8 Imp. qts)**	Ethylene–glycol base
	A/T	**9.8 liters (10.4 US qts, 8.6 Imp. qts)**	

LUBRICANT

Item	Capacity	Classification
Engine oil Dry fill	**5.4 liters (5.7 US qts, 4.8 Imp. qts)**	API grade SH, Energy–Conserving II or ILSAC multigrade and recommended viscosity oil.
Drain and refill w/o Oil filter change	**4.2 liters (4.4 US qts, 3.7 Imp. qts)**	
w/ Oil filter change	**4.5 liters (4.8 US qts, 4.0 Imp. qts)**	

SSM (SPECIAL SERVICE MATERIALS)

08826–00080	Sea! Packing Black or equivalent (FIPG)	Camshaft bearing cap Cylinder head cover Rear oil seal retainer Oil pump
08826–00080	Seal Packing Black or equivalent (FIPG)	Oil pan baffle plate Oil pan Oil pressure sender gauge
08826–00100	Seal Packing 1282B. THREE BOND 1282B or equivalent (FIPG)	Water outlet No–2 idler pulley Water pump No.1 water bypass pipe
08833–00070	Adhesive 1324, THREE BOND 1324 or equivalent	Flywheel bolt Drive plate bolt

SERVICE SPECIFICATIONS

SERVICE DATA

Tune–up	Battery		
	Voltage (Except Delco Battery)	at 20°C (68°F)	12.7 – 12.9 V
	High–tension cord resistance	Maximum	25 kΩ per cord
	Spark plug		
	Recommended spark plug		
		ND	K16R–U
		NGK	BKR5EYA
	Correct electrode gap		0.8 mm (0.031 in.)
	Drive belt tension	New belt	160 ± 20 lbf
		Used belt	100 ± 20 lbf
	Valve clearance (Cold)	Intake	0.18 – 0.28 mm (0.007 – 0.011 in.)
		Exhaust	0.22 – 0.32 mm (0.009 – 0.013 in.)
	Valve clearance adjusting shim (for repair part)		
		Mark 2.200	2.200 mm (0.0866 in.)
		Mark 2.250	2.250 mm (0.0886 in.)
		Mark 2.300	2.300 mm (0.0906 in.)
		Mark 2.350	2.350 mm (0.0925 in.)
		Mark 2.400	2.400 mm (0.0945 in.)
		Mark 2.450	2.450 mm (0.0965 in.)
		Mark 2.500	2.500 mm (0.0984 in.)
		Mark 2.550	2.550 mm (0.1004 in.)
		Mark 2.600	2.600 mm (0.1024 in.)
		Mark 2.650	2.650 mm (0.1043 in.)
		Mark 2.700	2.700 mm (0.1063 in.)
		Mark 2.750	2.750 mm (0.1083 in.)
		Mark 2.800	2.800 mm (0.1102 in.)
		Mark 2.850	2.850 mm (0.1122 in.)
		Mark 2.900	2.900 mm (0.1142 in.)
		Mark 2.950	2.950 mm (0.1161 in.)
		Mark 3.000	3.000 mm (0.1181 in.)
		Mark 3.050	3.050 mm (0.1201 in.)
		Mark 3.100	3.100 mm (0.1220 in.)
		Mark 3.150	3.150 mm (0.1240 in.)
		Mark 3.200	3.200 mm (0.1260 in.)
		Mark 3.250	3.250 mm (0.1280 in.)
		Mark 3.300	3.300 mm (0.1299 in.)
		Mark 3.350	3.350 mm (0.1319 in.)
		Mark 3.400	3.400 mm (0.1339 in.)
	Ignition timing		10° BTDC @ idle (w/ Terminals TE1 and E1 connected of DLC1)
	Idle speed		800 ± 50 rpm
Compression pressure	at 250 rpm	STD	1,177 kPa (12.0 kgf/cm², 171 psi) or more
		Minimum	981 kPa (10.0 kgf/cm², 142 psi)
	Difference of pressure between each cylinder		98 kPa (1.0 kgf/cm², 14 psi) or less
Timing belt tensioner	Protrusion from housing end		10.0 – 10.5 mm (0.394 – 0.413 in.)

Cylinder head	Warpage	Maximum	0.10 mm (0.0039 in.)
	Valve seat Refacing angle		30°, 45°, 60°
	Contacting angle		45°
	Contacting width		1.2 – 1.6 mm (0.047 – 0.063 in.)
Valve guide bushing	Inside diameter		8.010 – 8.030 mm (0.3154 – 0.3161 in.)
	Outside diameter	STD	13.040 – 13.051 mm (0.5134 – 0.5138 in.)
		O/S 0.05	13.090 – 13.101 mm (0.5154 – 0.5158 in.)
Valve	Valve overall length	STD	104.3 mm (4.106 in.)
		Minimum	103.8 mm (4.087 in.)
	Valve face angle		44.5°
	Stem diameter	STD Intake	7.970 – 7.985 mm (0.3138 – 0.3144 in.)
		Exhaust	7.965 – 7.980 mm (0.3136 – 0.3142 in.)
	Stem oil clearance	STD Intake	0.025 – 0.060 mm (0.0010 – 0.0024 in.)
		Exhaust	0.030 – 0.065 mm (0.0012 – 0.0026 in.)
		Maximum Intake	0.08 mm (0.0031 in.)
		Exhaust	0.10 mm (0.0039 in.)
	Margin thickness	STD	1.3 – 1.7 mm (0.051 – 0.067 in.)
		Minimum	1.0 mm (0.039 in.)
Valve spring	Deviation	Maximum	1.23 mm (0.0484 in.)
	Free length	White painted mark	46.50 mm (1.8307 in.)
		Green painted mark	47.01 mm (1.8508 in.)
	Installed tension at 40.0 mm (1.575 in.)		242 – 268 N (24.7 – 27.3 kgf, 54.5 – 60.2 lbf)
Camshaft	Thrust clearance	STD	0.080 – 0.190 mm (0.0031 – 0.0075 in.)
		Maximum	0.25 mm (0.0098 in.)
	Journal oil clearance	STD	0.025 – 0.066 mm (0.0010 – 0.0026 in.)
		Maximum	0.10 mm (0.0039 in.)
	Journal diameter		33.959 – 33.975 mm (1.3370 – 1.3376 in.)
	Circle runout	Maximum	0.06 mm (0.0024 in.)
	Cam lobe height	STD	47.830 – 47.930 mm (1.8830 – 1.8870 in.)
		Minimum	47.50 mm (1.8701 in.)
Valve lifter	Lifter bore diameter		37.922 – 37.932 mm (1.4930 – 1.4934 in.)
	Lifter diameter		37.960 – 37.975 mm (1.4945 – 1.4951 in.)
	Oil clearance	STD	0.028 – 0.053 mm (0.0011 – 0.0021 in.)
		Maximum	0.10 mm (0.0039 in.)
Air intake chamber	Warpage	Maximum	0.10 mm (0.0039 in.)
Intake Manifold	Warpage	Maximum	0.10 mm (0.0039 in.)
Exhaust Manifold	Warpage	Maximum	0.70 mm (0.0276 in.)

Cylinder block	Cylinder head surface warpage		Maximum	0.05 mm (0.0020 in.)
	Cylinder bore diameter	STD	Mark 1	87.500 – 87.510 mm (3.4449 – 3.4453 in.)
			Mark 2	87.510 – 87.520 mm (3.4453 – 3.4457 in.)
			Mark 3	87.520 – 87.530 mm (3.4457 – 3.4461 in.)
		Maximum	STD	87.73 mm (3.4539 in.)
			O/S 0.50	88.23 mm (3.4736 in.)
	Main journal bore diameter		Mark 1	68.010 – 68.016 mm (2.6776 – 2.6778 in.)
			Mark 2	68.016 – 68.022 mm (2.6778 – 2.6780 in.)
			Mark 3	68.022 – 68.028 mm (2.6780 – 2.6783 in.)
Piston and piston ring	Piston diameter	STD	Mark 1	87.360 – 87.370 mm (3.4394 – 3.4398 in.)
			Mark 2	87.370 – 87.380 mm (3.4398 – 3.4402 in.)
			Mark 3	87.380 – 87.390 mm (3.4402 – 3.4405 in.)
			O/S 0.50	87.860 – 87.890 mm (3.4590 – 3.4602 in.)
	Piston oil clearance		STD	0.130 – 0.150 mm (0.0051 – 0.0059 in.)
			Maximum	0.17 mm (0.0067 in.)
	Piston ring groove clearance	STD	No.1	0.020 – 0.060 mm (0.0008 – 0.0024 in.)
			No.2	0.030 – 0.070 mm (0.0012 – 0.0028 in.)
			Maximum	0.20 mm (0.0079 in.)
	Piston ring end gap	STD	No.1	0.280 – 0.500 mm (0.0110 – 0.0197 in.)
			No.2	0.380 – 0.600 mm (0.0150 – 0.0236 in.)
			Oil	0.150 – 0.500 mm (0.0059 – 0.0197 in.)
		Maximum	No.1	1.10 mm (0.0433 in.)
			No.2	1.20 mm (0.0472 in.)
			Oil	1.10 mm (0.0433 in.)
Connecting rod	Thrust clearance		STD	0.150 – 0.330 mm (0.0059 – 0.0130 in.)
			Maximum	0.38 mm (0.0150 in.)
	Connecting rod big end inner diameter Reference	STD	Mark 1	58.000 – 58.008 mm (2.2835 – 2.2838 in.)
			Mark 2	58.008 – 58.016 mm (2.2838 – 2.2841 in.)
			Mark 3	58.016 – 58.024 mm (2.2841 – 2.2844 in.)
	Connecting rod bearing center wall thickness Reference	STD	Mark 1	1.484 – 1.488 mm (0.0584 – 0.0586 in.)
			Mark 2	1.488 – 1.492 mm (0.0586 – 0.0587 in.)
			Mark 3	1.492 – 1.496 mm (0.0587 – 0.0589 in.)
	Connecting rod oil clearance		STD	0.024 – 0.053 mm (0.0009 – 0.0021 in.)
			U/S 0.25, U/S 0.50	0.023 – 0.069 mm (0.0009 – 0.0027 in.)
			Maximum	0.08 mm (0.0031 in.)
	Rod alignment	Maximum per 100 mm (3.94 in.)		0.05 mm (0.0020 in.)
	Rod twist	Maximum per 100 mm (3.94 in.)		0.15 mm (0.0059 in.)
	Connecting rod bolt thread outside diameter		STD	7.860 – 8.000 mm (0.3094 – 0.3150 in.)
			Minimum	7.60 mm (0.2992 in.)

Crankshaft	Thrust clearance		STD	0.020 – 0.220 mm (0.0008 – 0.0087 in.)
			Maximum	0.30 mm (0.0118 in.)
	Thrust washer thickness			2.440 – 2.490 mm (0.0961 – 0.0980 in.)
	Main journal oil clearance		No.1 for STD	0.0025 – 0.0052 mm (0.0010 – 0.0020 in.)
			No.1 for U/S 0.25, U/S 0.50	0.0024 – 0.0080 mm (0.0009 – 0.0031 in.)
			Others for STD	0.0029 – 0.0056 mm (0.0011 – 0.0022 in.)
			Others for U/S 0.25, U/S 0.50	0.0028 – 0.0077 mm (0.0011 – 0.0030 in.)
			Maximum	0.80 mm (0.0031 in.)
	Main journal diameter		STD	63.985 – 64.000 mm (2.5190 – 2.5197 in.)
			U/S 0.25	63.745 – 63.755 mm (2.5096 – 2.5100 in.)
			U/S 0.50	63.495 – 63.505 mm (2.4998 – 2.5002 in.)
	Main journal diameter Reference	STD	Mark 0	63.996 – 64.000 mm (2.5195 – 2.5197 in.)
			Mark 1	63.990 – 63.996 mm (2.5193 – 2.5195 in.)
			Mark 2	63.985 – 63.990 mm (2.5191 – 2.5193 in.)
	Main bearing center wall thickness Reference	STD	No.1 Mark 1	1.991 – 1.994 mm (0.0784 – 0.0785 in.)
			Mark 2	1.994 – 1.997 mm (0.0785 – 0.0786 in.)
			Mark 3	1.997 – 2.000 mm (0.0786 – 0.0787 in.)
			Mark 4	2.000 – 2.003 mm (0.0787 – 0.0789 in.)
			Mark 5	2.003 – 2.006 mm (0.0789 – 0.0790 in.)
			Others Mark 1	1.989 – 1.992 mm (0.0783 – 0.0784 in.)
			Mark 2	1.992 – 1.995 mm (0.0784 – 0.0785 in.)
			Mark 3	1.995 – 1.998 mm (0.0785 – 0.0787 in.)
			Mark 4	1.998 – 2.001 mm (0.0787 – 0.0788 in.)
			Mark 5	2.001 – 2.004 mm (0.0788 – 0.0789 in.)
	Crank pin diameter		STD	54.987 – 55.000 mm (2.1648 – 2.1654 in.)
			U/S 0.25	54.745 – 54.755 mm (2.1553 – 2.1557 in.)
			U/S 0.50	54.495 – 54.505 mm (2.1455 – 2.1459 in.)
	Circle runout		Maximum	0.06 mm (0.0024 in.)
	Main journal taper and out–of –round		Maximum	0.02 mm (0.0008 in.)
	Crank pin journal taper and out–of–round		Maximum	0.02 mm (0.0008 in.)

TORQUE SPECIFICATIONS

Part tightened	N·m	kgf·cm	ft·lbf
Spark plug x Cylinder head	18	180	13
No.1 idler pulley x Cylinder head	34	350	25
Crankshaft pulley x Crankshaft	245	2,500	181
Camshaft timing pulley x Camshaft	108	1,100	80
Fan bracket x Cylinder block	41	420	30
Timing belt tensioner x Fan bracket	28	280	20
Water outlet x No.2 idler pulley	15	150	11
Cooling fen x Fluid coupling	5.4	55	48 in.·lbf
Exhaust manifold x Cylinder head	39	400	29
Generator bracket x Cylinder head	37	380	27

Cylinder head x Cylinder block	for 12 pointed head (1st)	44	450	33
	(2nd)	Turn 90°		
	(3rd)	Turn 90°		
	for 6 pointed head	41	420	30
Camshaft bearing cap x Cylinder head		16	160	12
Cylinder head cover x Cylinder head		5.4	55	48 in.·lbf
Engine hanger x Cylinder head		40	410	30
Oil dipstick guide x Cylinder head		37	380	27
Exhaust crossover pipe x Exhaust manifold		39	400	29
Intake manifold x Cylinder head		18	185	13
Water bypass outlet x Intake manifold		18	185	13
Delivery pipe x Cylinder head		13	130	9
No. 1 injection manifold x Exhaust manifold		29	300	22
PAIR reed valve x Cylinder head		37	380	27
No.3 timing belt cover x Cylinder head		8.3	85	74 in.·lbf
No.2 idler pulley x Intake manifold		18	185	13
No.4 timing belt cover x No.3 timing belt cover		8.3	85	74 in.·lbf
No.2 fuel pipe x Delivery pipe		34	350	25
No.3 fuel pipe x Delivery pipe		34	350	25
Air intake chamber x Intake manifold		18	185	13
EGR pipe x Exhaust manifold		29	300	22
EGR pipe x Air intake chamber		29	300	22
EGR valve x Air intake chamber		18	185	13
Air intake chamber stay x Air intake chamber		18	185	13
Air intake chamber stay x Cylinder head		18	185	13
Cold start injector tube x Cold start injector		15	150	13
Main bearing cap x Cylinder block	for 1st	61	625	45
	for 2nd	Turn 90°		
Connecting rod cap x Connecting rod	1st	25	250	18
	2nd	Turn 90°		
Rear oil seal retainer x Cylinder block		7.8	80	69 in.·lbf
Oil pump x Cylinder block		20	200	14
Oil strainer X Main bearing cap		6.9	70	61 in.·lbf
Oil strainer x Oil pump		6.9	70	61 in.·lbf
Oil pan x Cylinder block		5.9	60	52 in.·lbf
Oil pan x Oil pump		5.9	60	52 in.·lbf
Oil pan x Rear oil seal retainer		5.9	60	52 in.·lbf
Oil filter union x Cylinder block		25	250	18
Oil cooler x Cylinder block	for union bolt (2WD)	59	600	43
	for relief valve (4WD)	59	600	43
	for bolt	39	400	29
Engine coolant drain plug x Cylinder block		29	300	22
RH engine mounting bracket x Cylinder block		40	410	30
LH engine mounting bracket x Cylinder block		40	410	30
Oil pressure sender gauge x Cylinder block		15	150	11
Water pump x Cylinder block	for short bolt	20	200	14
	for long bolt	18	185	13
No. 1 water bypass pipe x Cylinder block	for bolt	4.9	50	43 in.·lbf
	for nut	6.9	70	61 in.·lbf

Rear end plate x Cylinder block	7.4	75	65 in.·lbf
Crankshaft x Flywheel (M/T)	88	900	65
Crankshaft x Drive plate (A/T)	83	850	61
Cylinder block x Oil cooler relief valve	59	600	43
Rear engine mounting bracket x Support member (2WD)	25	260	19
Rear engine mounting bracket x Mounting insulator (2WD)	13	130	9
No.2 frame crossmember x Side frame (4WD)	95	970	70
No.2 frame crossmember x Rear engine mounting insulator (4WD)	13	130	9
RH engine mounting insulator x Body	37	380	27
LH engine mounting insulator x Body	37	380	27
Front exhaust pipe x Exhaust manifold	62	630	46
Front exhaust pipe x Three–way catalytic converter	39	400	29
Tailpipe x Three–way catalytic converter	39	400	29

TIMING BELT

COMPONENTS FOR REMOVAL AND INSTALLATION

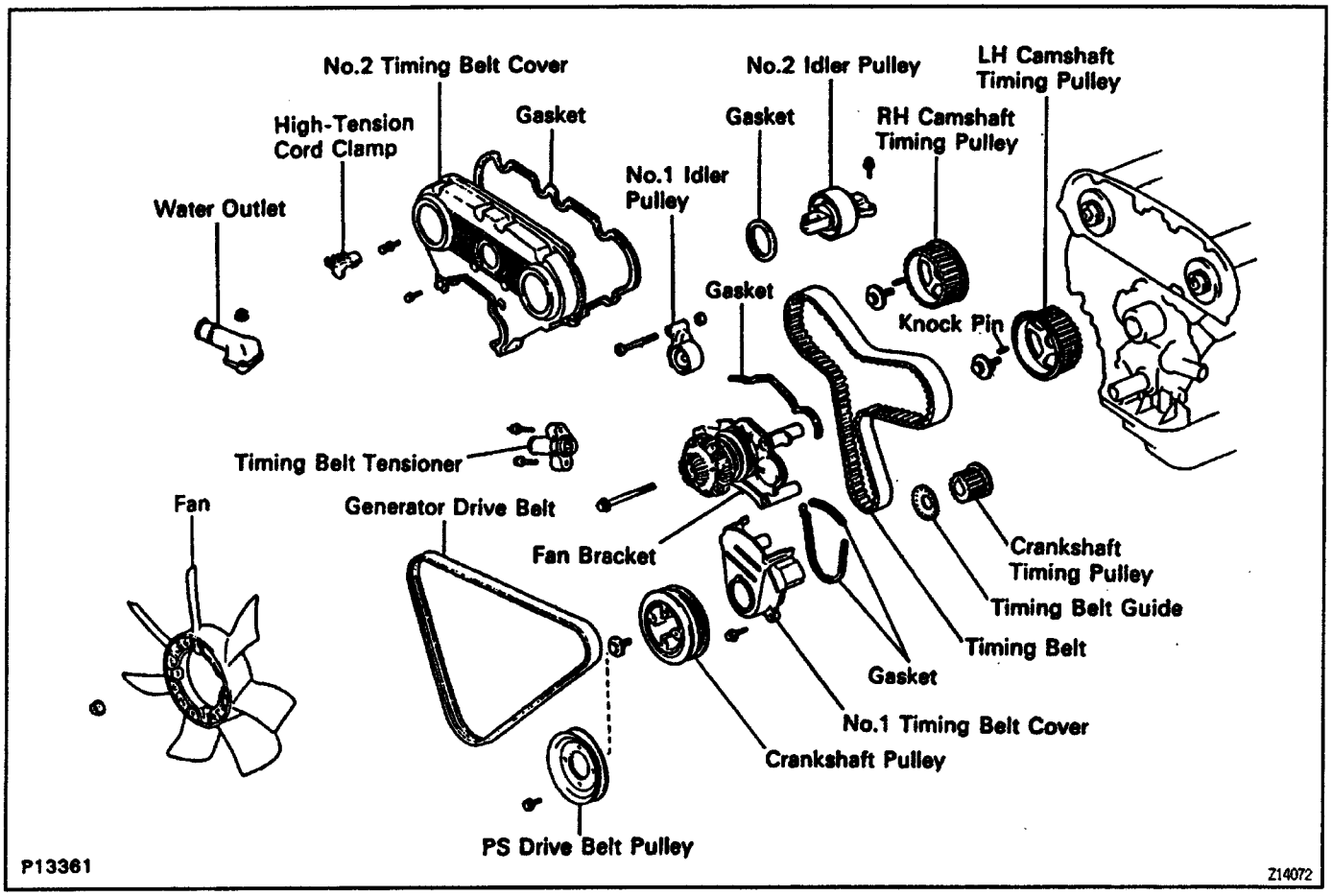

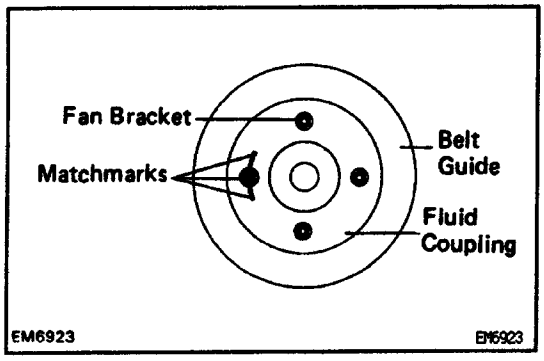

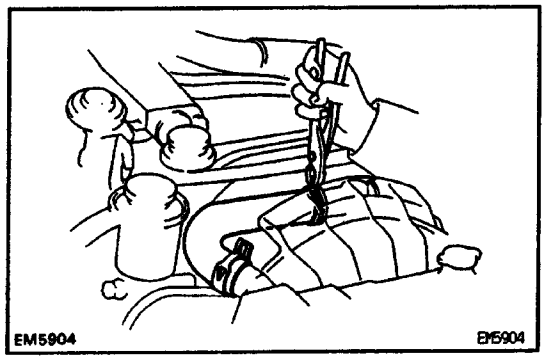

TIMING BELT REMOVAL

(See Components for Removal and Installation)

NOTICE: If removing and later reinstalling the fluid coupling from the fan bracket, place matchmarks on the fluid coupling and fan bracket so that the fluid coupling can be replaced exactly as before.

1. REMOVE ENGINE UNDER COVER

2. DRAIN ENGINE COOLANT

3. REMOVE RADIATOR

(a) Disconnect the reservoir hose.

(b) A/T only:

Disconnect the oil cooler hoses.

(c) Remove the radiator hoses.

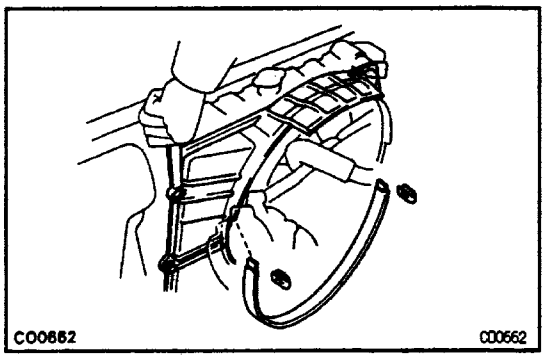

(d) Remove the 2 clips and No.2 fan shroud.
(e) Remove the 4 bolts and No.1 fan shroud.
(f) Remove the 4 bolts and radiator.

4. DISCONNECT NO.2 AND NO.3 AIR HOSES FROM AIR PIPE

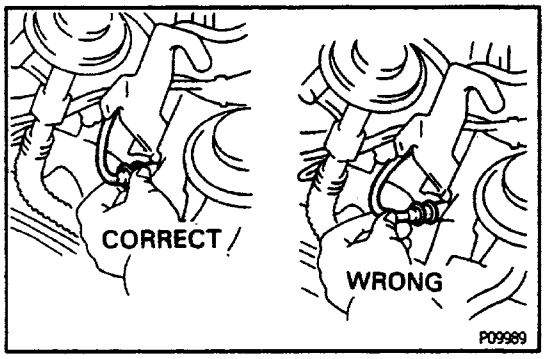

5. DISCONNECT HIGH–TENSION CORDS FROM SPARK PLUGS

Disconnect the high – tension cords at the rubber boot. Do not pull on the cords.

NOTICE: Pulling on or bending the cords may damage the conductor inside.

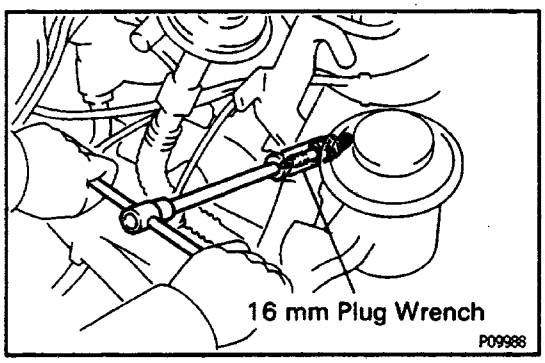

6. REMOVE SPARK PLUGS

Using a 16 mm plug wrench, remove the6 spark plugs.

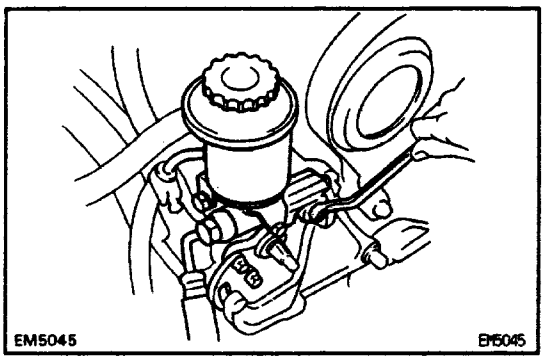

7. REMOVE PS DRIVE BELT AND PUMP PULLEY
8. DISCONNECT PS PUMP FROM ENGINE
9. REMOVE A/C DRIVE BELT

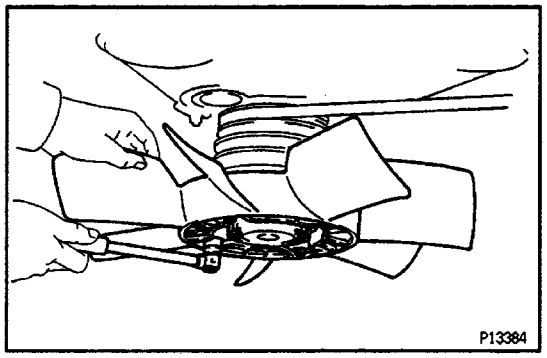

10. REMOVE COOLING FAN

Remove the 4 nuts and cooling fan.

11. REMOVE GENERATOR DRIVE BELT

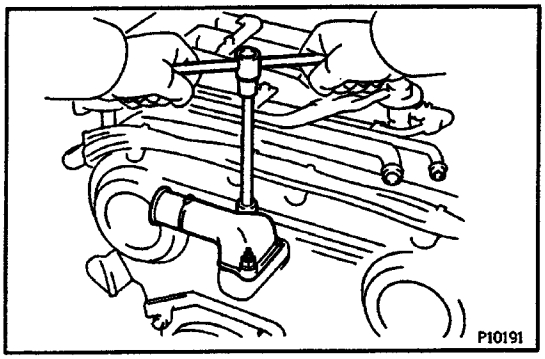

12. REMOVE WATER OUTLET

Remove the 2 nuts and water outlet.

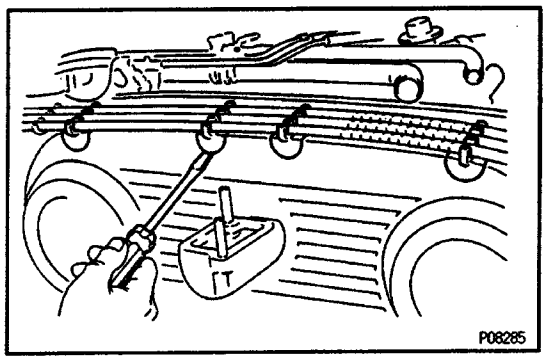

13. REMOVE NO.2 TIMING BELT COVER

(a) Using a screwdriver, disconnect the 4 high–tension cord clamps from the mounting bolts of the No.2 timing belt cover.

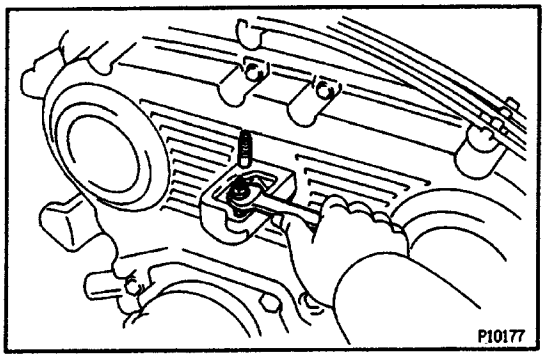

(b) Using the 2 water inlet nuts, remove the 2 stud bolts.

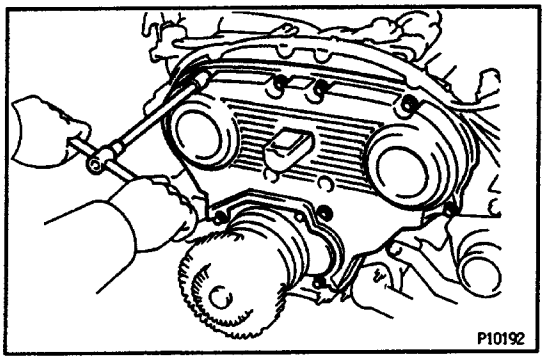

(c) Remove the 11 bolts, timing belt cover and 3 gaskets.

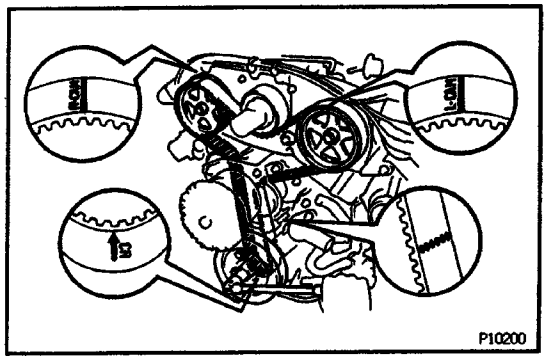

14. IF RE–USING TIMING BELT, CHECK INSTALLATION MARKS ON TIMING BELT

Check that there are 4 installation marks on the timing belt by turning the crankshaft pulley as shown in the illustration.

HINT: If the installation marks have disappeared, place a new installation mark on the timing belt before removing each part.

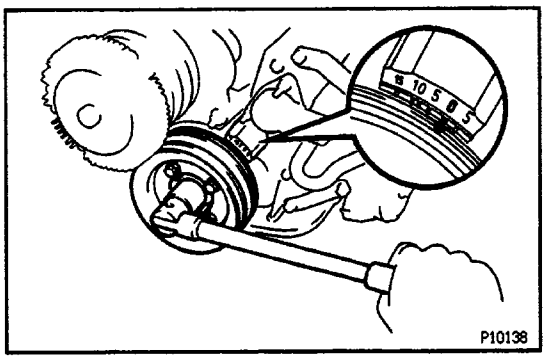

15. SET NO.1 CYLINDER AT TDC/COMPRESSION

(a) Turn the crankshaft pulley and align its groove with timing mark ”0” of the No.1 timing belt cover.

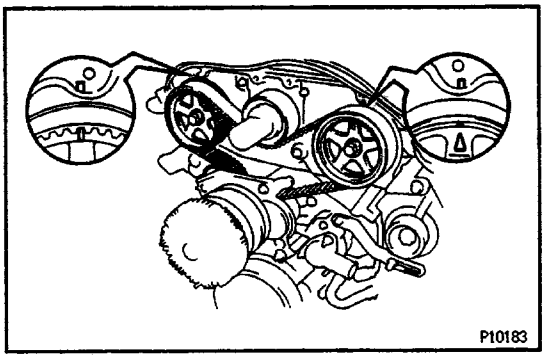

(b) Check that the timing marks of the camshaft timing pulleys and No.3 timing belt cover are aligned.
If not, turn the crankshaft pulley 1 revolution (360˚).

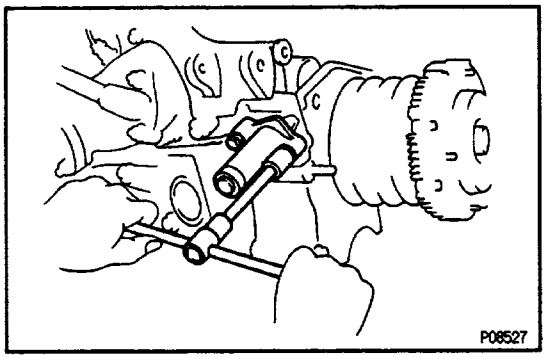

16. REMOVE TIMING BELT TENSIONER

Alternately loosen the 2 bolts, and remove them, the belt tensioner and dust boot.

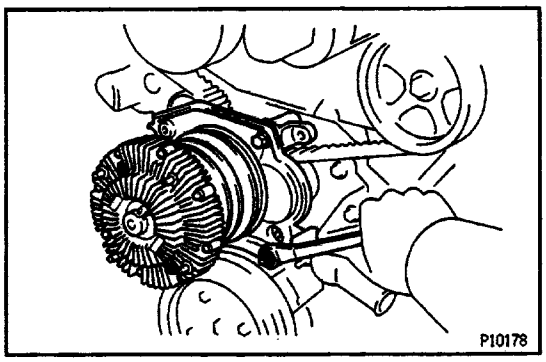

17. REMOVE FAN BRACKET

Remove the 2 bolts, nut, fan bracket and gasket.

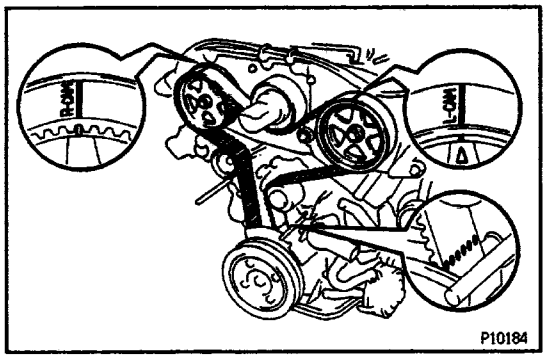

18. DISCONNECT TIMING BELT FROM CAMSHAFT TIMING PULLEYS

HINT (When re–using timing belt): if the installation marks have disappeared, before disconnecting the timing belt from the camshaft timing pulleys, place new installation marks on the timing belt to match the timing marks of the camshaft timing pulleys, and place the a new installation mark on the timing belt to match the end of the No.1 timing belt cover.

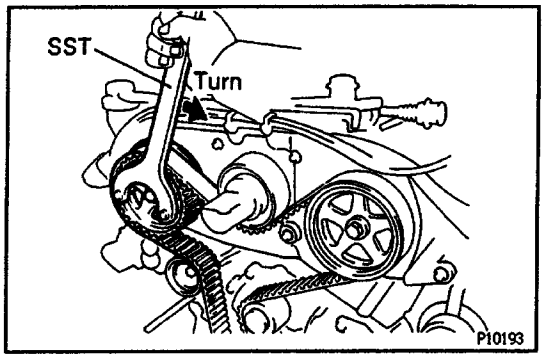

(a) Using SST, loosen the tension spring between the LH and RH camshaft timing pulleys by slightly turning the LH camshaft timing pulley clockwise.
SST 09960–10010 (09963–01000)

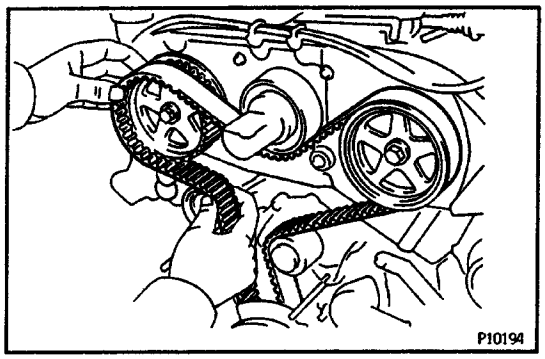

(b) Disconnect the timing belt from the camshaft timing pulleys.

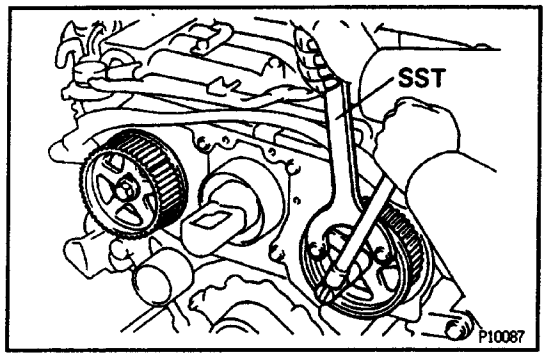

19. REMOVE CAMSHAFT TIMING PULLEYS

Using SST, remove the pulley bolt, timing pulley and knock pin. Remove the 2 timing pulleys.
SST 09960–10010 (09963–01000)

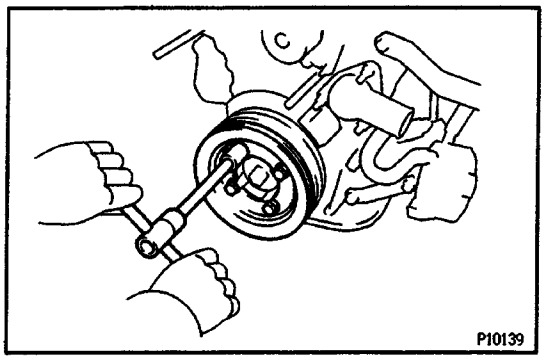

20. REMOVE CRANKSHAFT PULLEY

(a) Remove the 4 bolts and PS drive belt pulley.

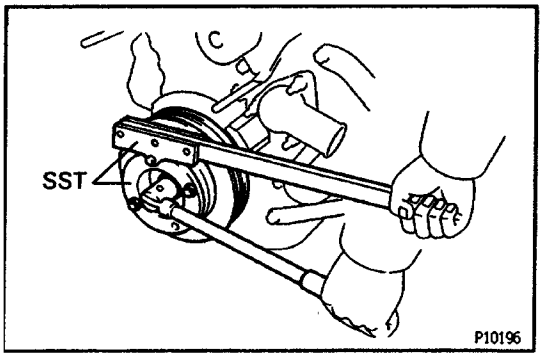

(b) Using SST, loosen the pulley bolt.
SST 09213–58012 (90201–08131, 91111–50845), 09330–00021

(c) Remove the SST and pulley bolt.

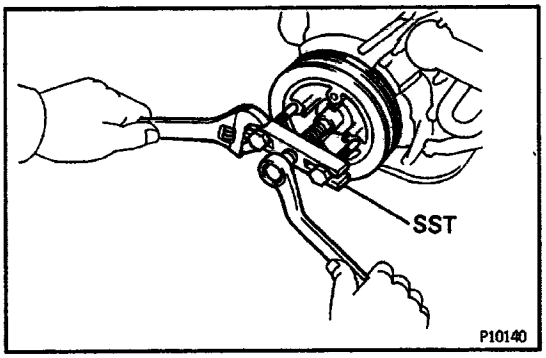

(d) Using SST, remove the pulley.
SST 09950 – 50010

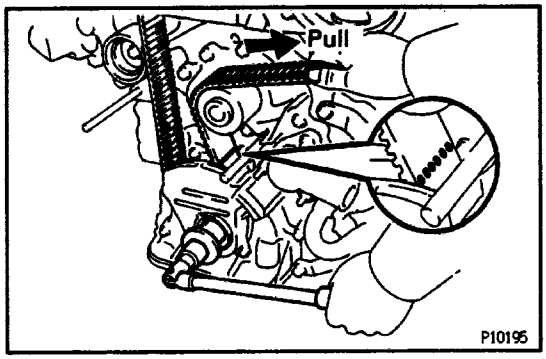

21. REMOVE No.1 TIMING BELT COVER

HINT (When re–using timing belt): Before removing the timing belt cover, using the crankshaft pulley bolt, turn the crankshaft and align the installation mark of the timing belt with the end of the timing belt cover.

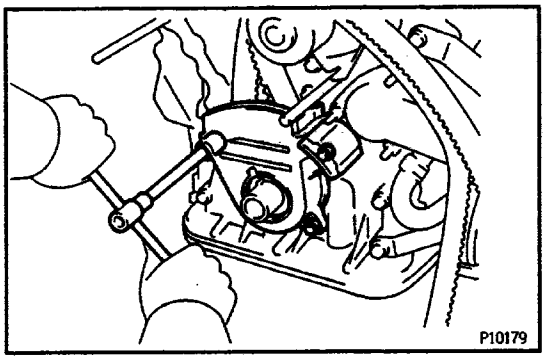

Remove the 3 bolts, timing belt cover and gasket.

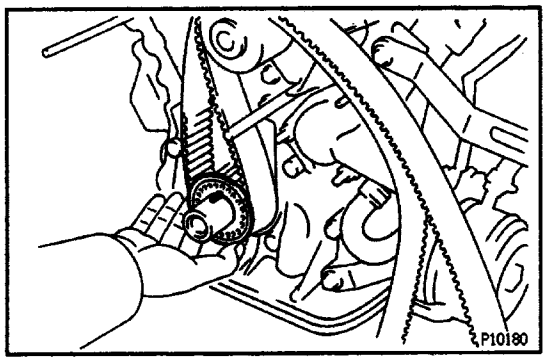

22. REMOVE TIMING BELT GUIDE

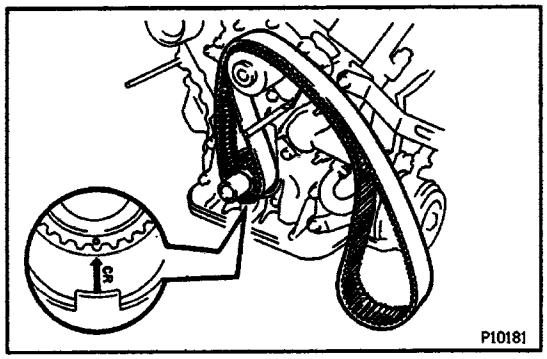

23. REMOVE TIMING BELT

HINT (When re–using timing belt): If the installation marks have disappeared, place a new installation mark
on the timing belt to the match the dot mark of the crankshaft timing pulley.

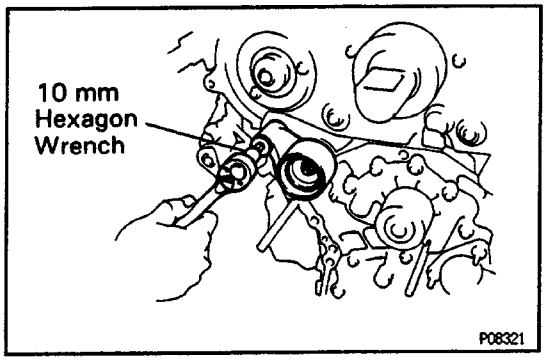

24. REMOVE No.1 IDLER PULLEY

Using a 10 mm hexagon wrench, remove the pivot bolt, idler pulley and plate washer.

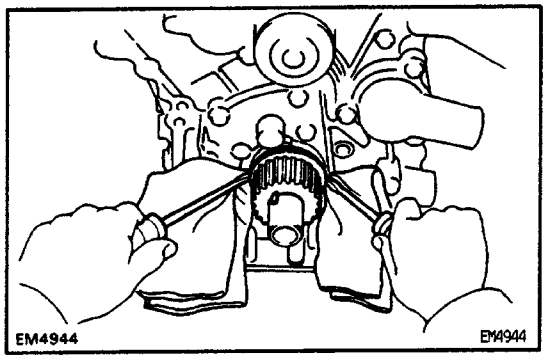

25. REMOVE CRANKSHAFT TIMING PULLEY

If the timing pulley cannot be removed by hand, use 2 screwdrivers.

HINT: Position shop rags as shown to prevent damage.

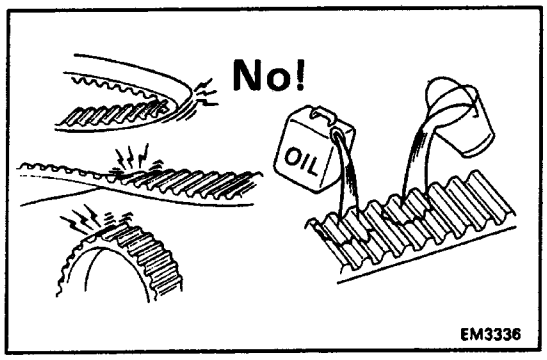

TIMING BELT COMPONENTS INSPECTION

1. INSPECT TIMING BELT

NOTICE:

- **Do not bend, twist or turn the timing belt inside out.**
  Do not allow the timing belt to come into contact with oil, water or steam.
- **Do not utilize timing belt tension when installing or removing the mounting bolt of the camshaft timing pulley.**
- **If there are any defects as shown in the illustration, check the following points:**

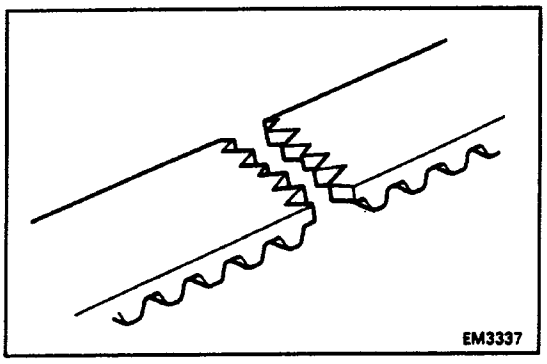

(a) Premature parting

- Check the proper installation.
- Check the timing cover gasket for damage and proper installation.

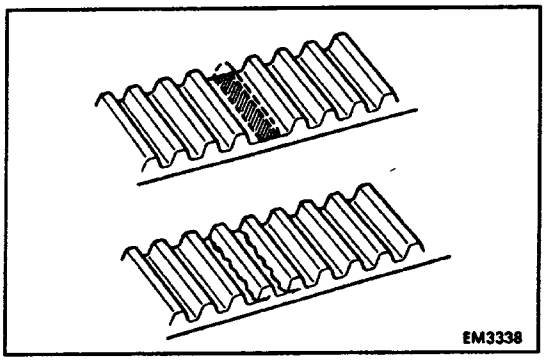

(b) If the belt teeth are cracked or damaged, check to see if either camshaft or water pump is locked.

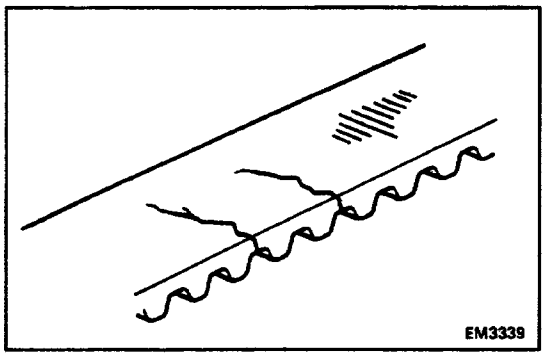

(c) If there is noticeable wear or cracks on the belt face, check to see if there are nicks on the side of the idler pulley lock.

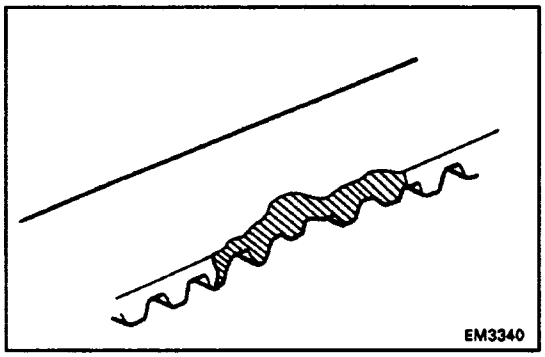

(d) If there is wear or damage on only one side of the belt, check the belt guide and the alignment of each pulley.

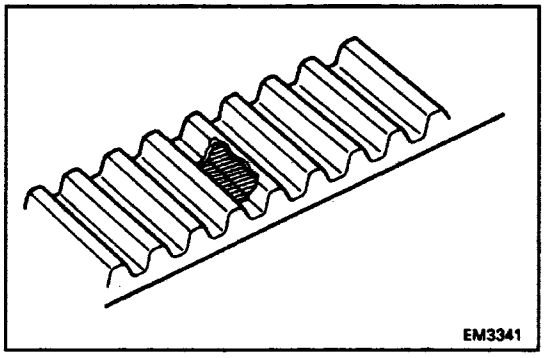

(e) If there is noticeable wear on the belt teeth, check the timing cover for damage, gasket has been installed correctly and foreign material on the pulley teeth.
If necessary, replace the timing belt.

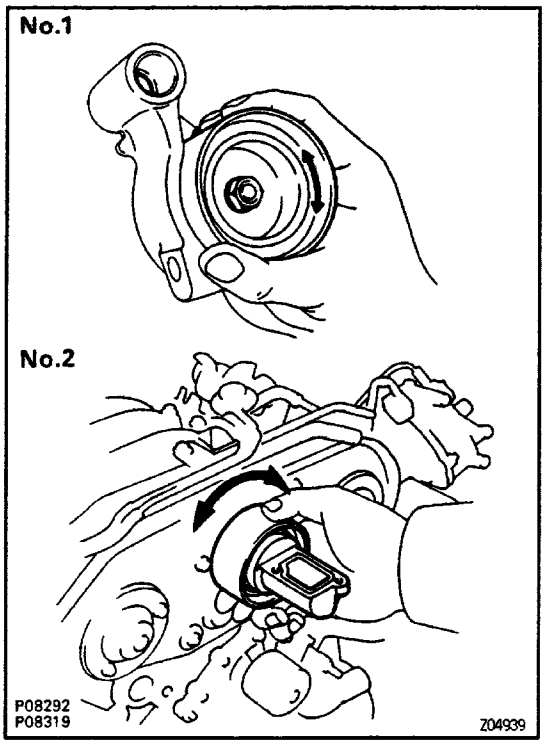

2. INSPECT IDLER PULLEYS

Check that the idler pulley turns smoothly.
If necessary, replace the idler pulley.

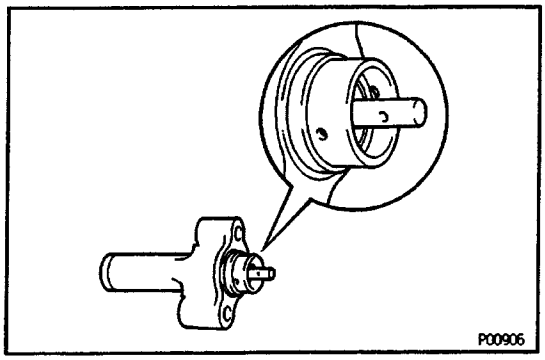

3. INSPECT TIMING BELT TENSIONER

(a) Visually check tensioner for oil leakage.

HINT: If there is only the faintest trace of oil on the seal on the push rod side, the tensioner is all right.

If leakage is found, replace the tensioner.

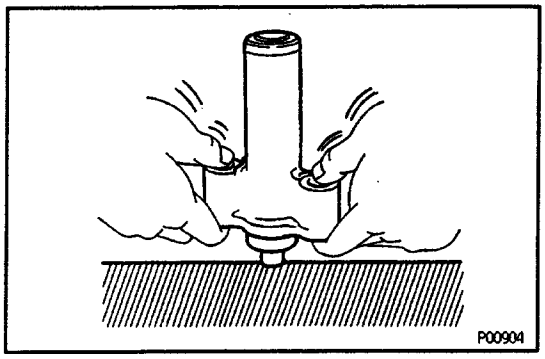

(b) Hold the tensioner with both hands, and push the push rod firmly against the floor or wall to check that it doesn't move.

If the push rod moves, replace the tensioner.

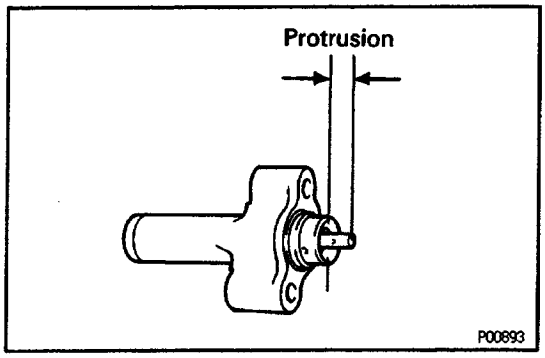

(c) Measure the protrusion of the push rod from the housing end.

Protrusion:

10.0 – 10.5 mm (0.394 – 0.413 in.)

if the protrusion is not as specified, replace the tensioner.

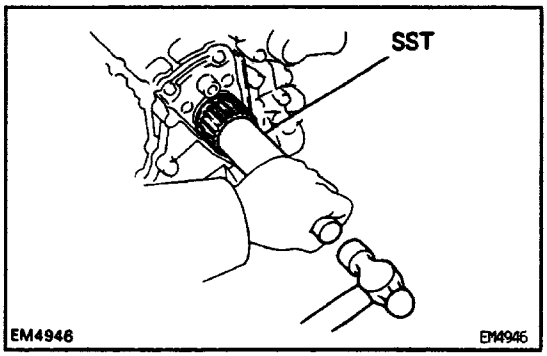

TIMING BELT INSTALLATION

(See Components for Removal and Installation)

1. INSTALL CRANKSHAFT TIMING PULLEY

(a) Align the timing pulley set key with the key groove of the pulley.

(b) Using SST and a hammer, tap in the timing pulley, facing the flange side inward.
SST 49214–60010

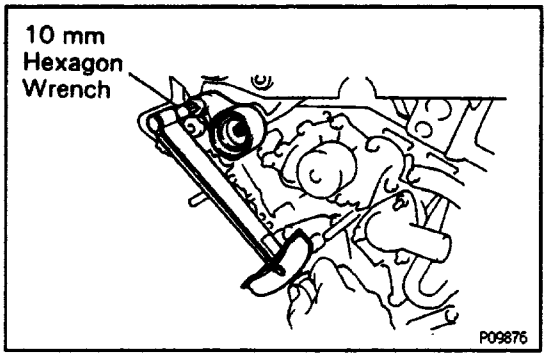

2. INSTALL NO.1 IDLER PULLEY

(a) Using a 10 mm hexagon wrench, install the plate washer and idler pulley with the pivot bolt.
Torque: 34 N–m (350 kgf–cm, 25 ft–lbf)

(b) Check that the pulley bracket moves smoothly.

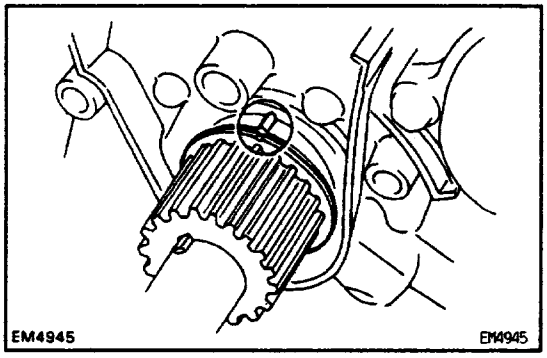

3. TEMPORARILY INSTALL TIMING BELT

NOTICE: The engine should be cold.

(a) Using the crankshaft pulley bolt, turn the crankshaft and align the timing marks of the crankshaft timing pulley and oil pump body.

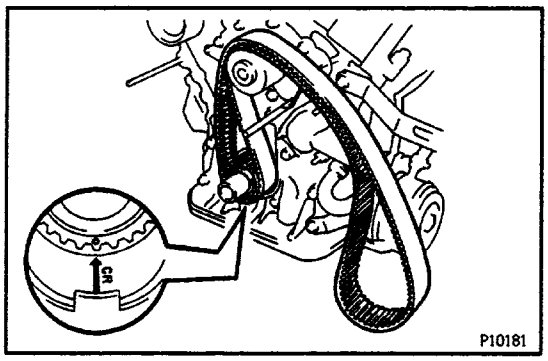

(b) Remove any oil or water on the crankshaft timing pulley and water pump pulley, and keep them clean.

(c) Align the installation mark on the timing belt with the dot mark of the crankshaft timing pulley.

(d) Install the timing belt on the crankshaft timing pulley and water pump pulley.

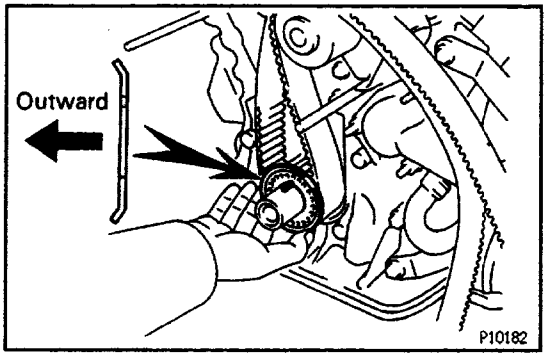

4. INSTALL TIMING BELT GUIDE

Install the belt guide, facing the cup side outward.

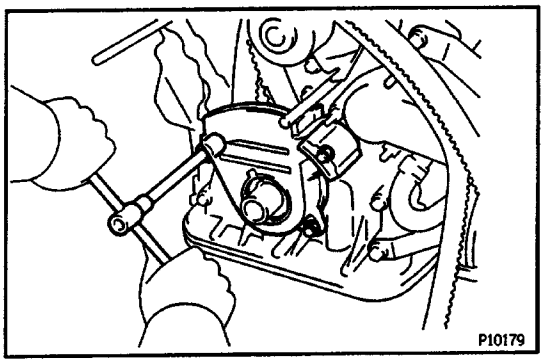

5. INSTALL NO.1 TIMING BELT COVER

(a) Install the gasket to the timing belt cover.

(b) Install the timing belt cover with the 3 bolts.

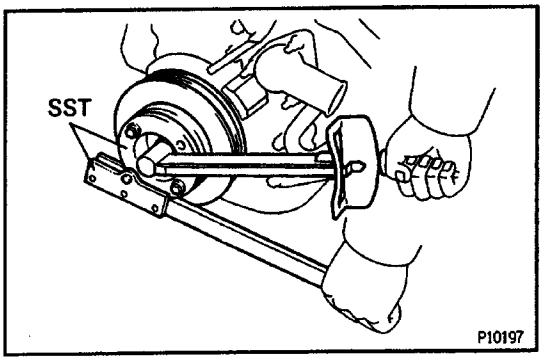

6. INSTALL CRANKSHAFT PULLEY

(a) Align the pulley set key with the key groove of the crankshaft pulley.

(b) Temporarily install the pulley bolt.

(c) Using SST, tighten the pulley bolt.

SST 09213–58012 (90201– 08131, 91111– 50845), 09330–00021

Torque: 245 N–m (2,500 k9f–cm, 181 ft–!bf)

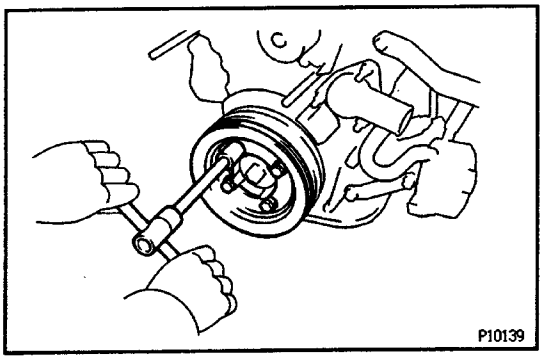

(d) Install the PS drive belt pulley with the 4 bolts.

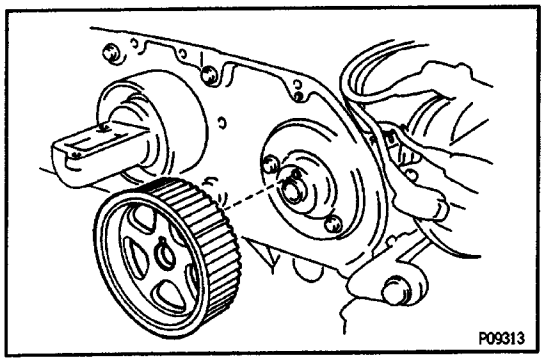

7. INSTALL LH CAMSHAFT TIMING PULLEY

(a) Install the knock pin to the camshaft.

(b) Align the knock pin hole of the camshaft with the knock pin groove of the timing pulley.

(c) Slide the timing pulley on the camshaft, facing the flange side outward.

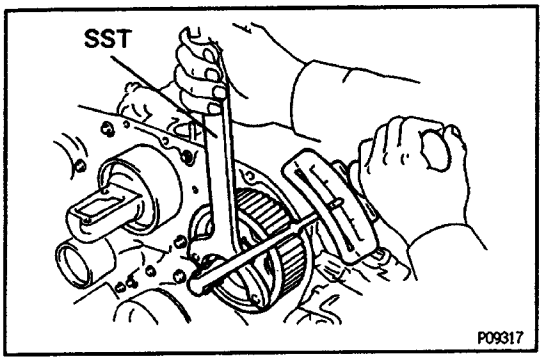

(d) Using SST, install the pulley bolt.

SST 09960–10010 (09963–01000)

Torque: 108 N–m (1,100 kgf–cm, 80 ft–lbf)

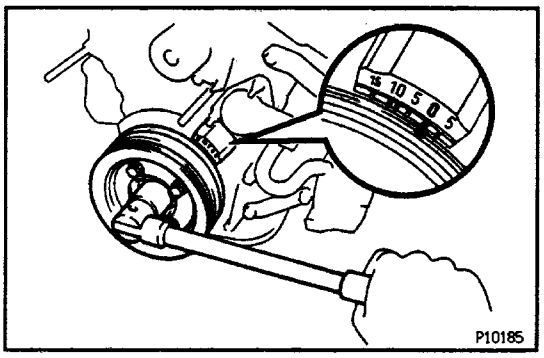

8. SET NO.1 CYLINDER TO TDC/COMPRESSION

(a) Crankshaft Position:

Turn the crankshaft pulley, and align its groove with timing mark ”0” of the No.1 timing belt cover.

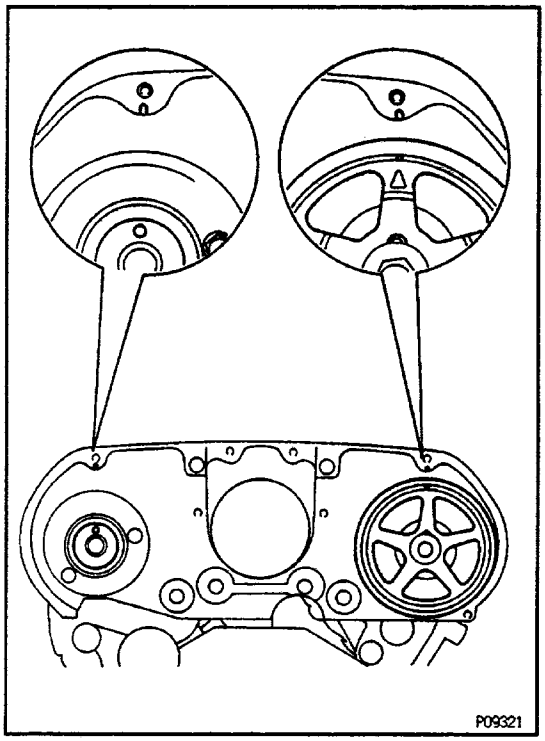

(b) RH Camshaft Pulley Position:

Turn the camshaft, align the knock pin hole of the camshaft with the timing mark of the No.3 timing belt cover.

(c) LH Camshaft Pulley Position:

Turn the camshaft timing pulley, align the timing marks of the camshaft timing pulley and No.3 timing belt cover.

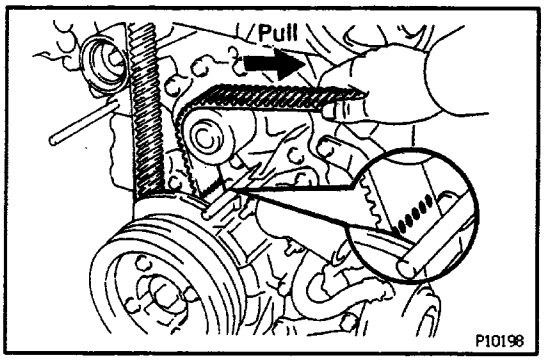

9. CONNECT TIMING BELT TO LH CAMSHAFT TIMING PULLEY

(a) Check that the installation mark on the timing belt is aligned with the end of the No.1 timing belt cover.

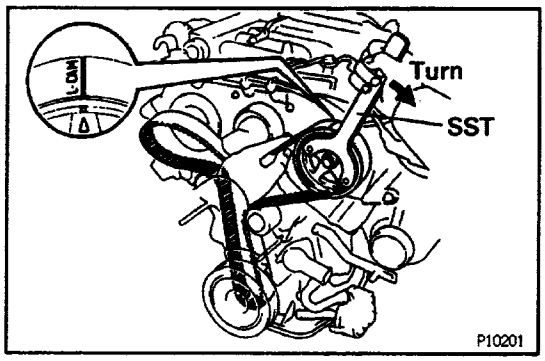

(b) Remove any oil or water on the LH camshaft timing pulley, and keep it clean.

(c) Using SST, slightly turn the LH camshaft timing pulley clockwise. Align the installation mark on the timing belt with the timing mark of the camshaft timing pulley, and hang the timing belt on the LH camshaft timing pulley.

SST 09860–10010 (09963–01000)

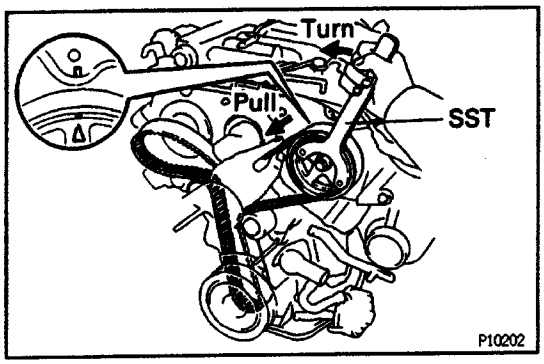

(d) Using SST, align the timing marks of the LH camshaft pulley and No.3 timing belt cover.
SST 09960–10010 (09963–01000)
(e) Check that the timing belt has tension between the crankshaft timing pulley and LH camshaft timing pulley.

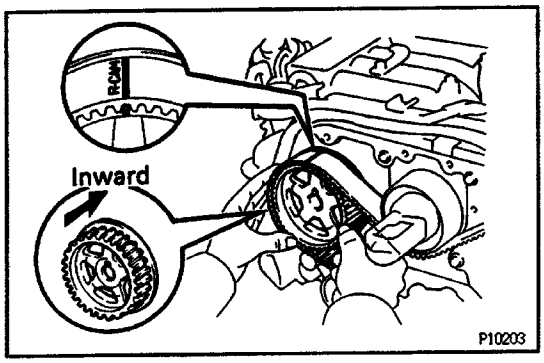

10. INSTALL RH CAMSHAFT TIMING PULLEY AND TIMING BELT

(a) Remove any oil or water on the RH camshaft timing pulley, No.1 idler pulley and No.2 idler pulley, and keep them clean.
(b) Align the installation mark on the timing belt with the timing mark of the RH camshaft timing pulley, and hang the timing belt on the RH camshaft timing pulley, facing the flange side inward.

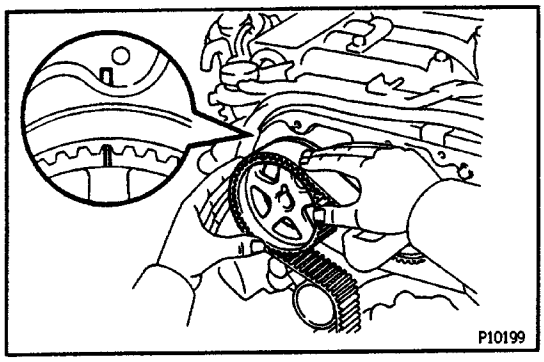

(c) Slide the RH camshaft timing pulley on the camshaft.
(d) Align the timing marks of the RH camshaft timing pulley and No.3 timing belt cover.

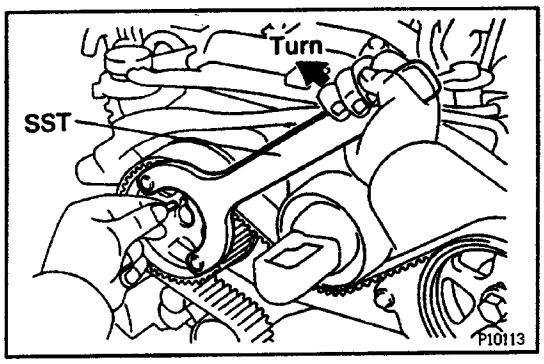

(e) Using SST, align the knock pin hole of the camshaft with the knock pin groove of the pulley and install the knock pin.
SST 09960–10010 (09963 – 01000)

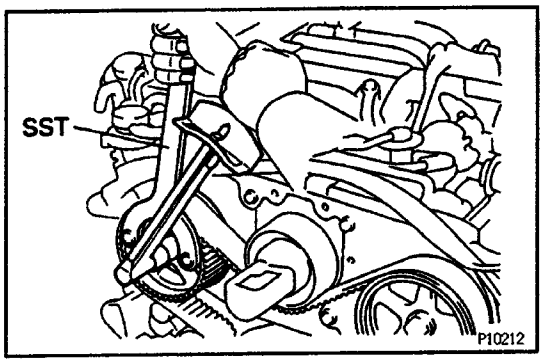

Using SST, install the pulley bolt.
SST 09960–10010 (09963–01000)
Torque: 108 N–m (1,100 kgf–cm, 80 ft–lbf)

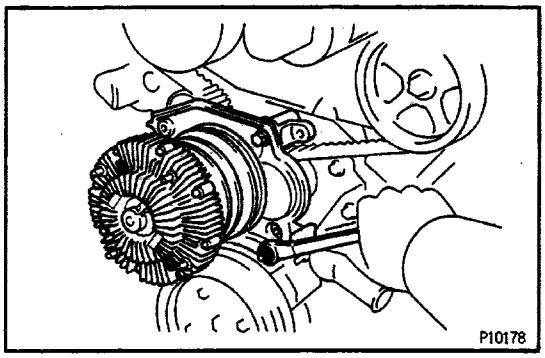

11. INSTALL FAN BRACKET

(a) Install the gasket to the fan pulley bracket.

(b) Install the fan bracket with the 2 bolts and nut.

Torque: 41 N–m (420 kgf–cm, 30 ft–lbf)

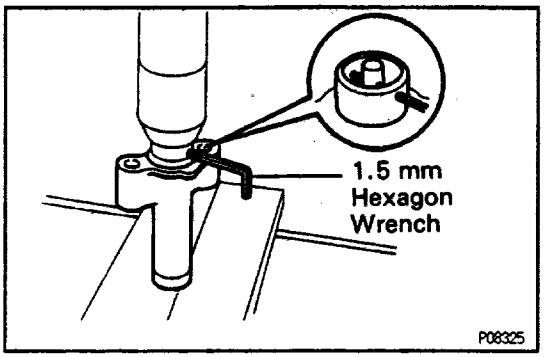

12. SET TIMING BELT TENSIONER

(a) Using a press, slowly press in the push rod using 981 – 8,807 N (100 – 1,000 kgf, 200 – 2,205 lbf) of force.

(b) Align the holes of the push rod and housing, pass a 1.5 mm hexagon wrench through the holes to keep the setting position of the push rod.

(c) Release the press.

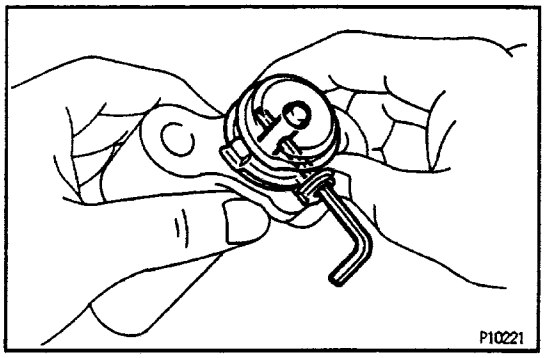

(d) Install the dust boot to the tensioner.

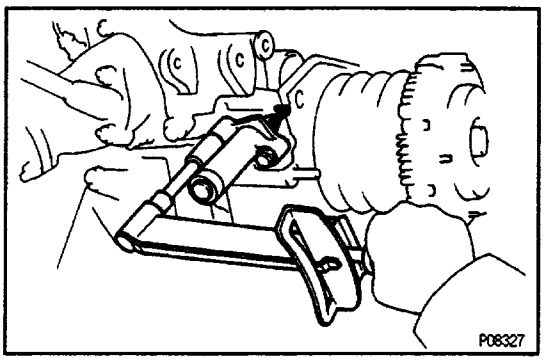

13. INSTALL TIMING BELT TENSIONER

(a) Temporarily install the belt tensioner with the 2 bolts.

(b) Alternately tighten the 2 bolts.

Torque: 28 N–m (280 kgf–cm, 20 ft–lbf)

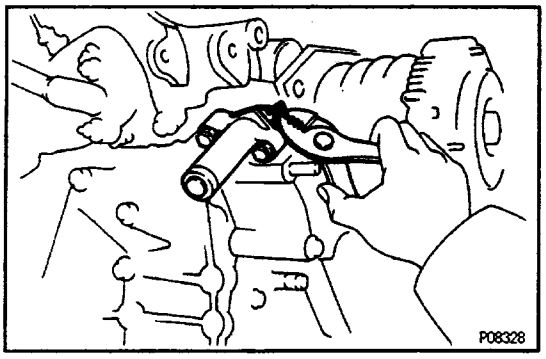

(c) Using pliers, remove the 1.5 mm hexagon wrench from the belt tensioner.

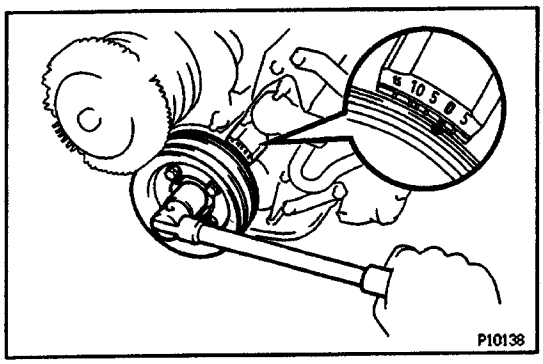

14. CHECK VALVE TIMING

(a) Slowly turn the crankshaft pulley 2 revolutions from TDC to TDC.

NOTICE: Always turn the crankshaft pulley clockwise.

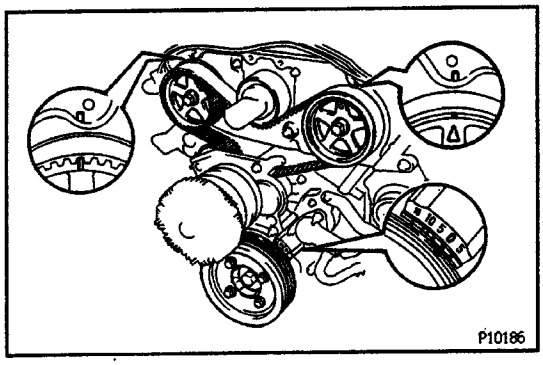

(b) Check that each pulley aligns with the timing marks as shown in the illustration.

If the timing marks do not align, remove the timing belt and reinstall it.

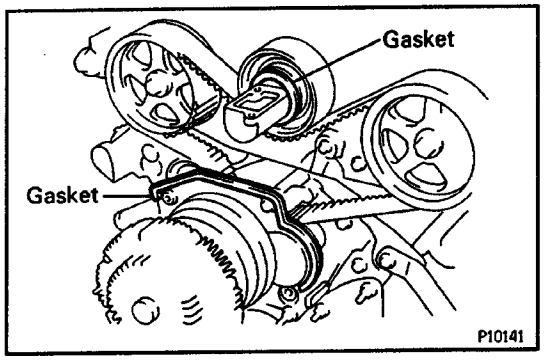

15. INSTALL NO.2 TIMING BELT COVER

(a) Install the gasket to the No.2 idler pulley.
(b) Install the gasket to the fan bracket.
(c) Install the gasket to the timing belt cover.

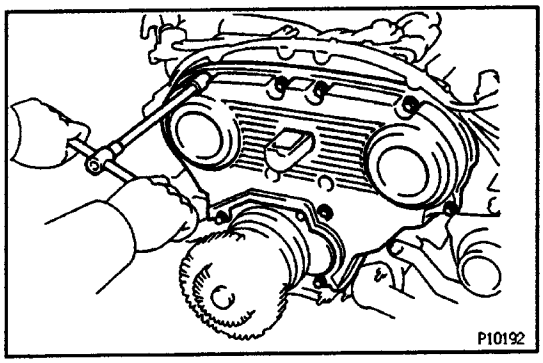

(d) Install the timing belt cover with the 11 bolts.

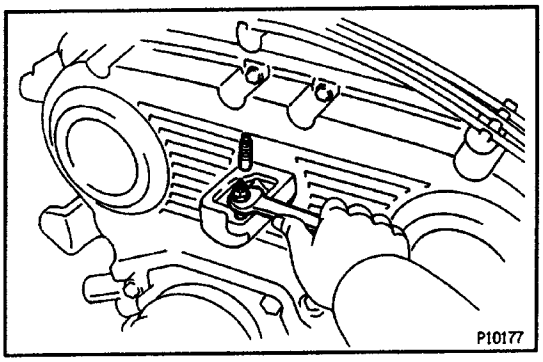

(e) Using the 2 water outlet nuts, install the 2 stud bolts.
(f) Connect the 4 clamps on the high–tension cords to the mounting bolts of the No.2 timing belt cover.

16. INSTALL WATER OUTLET

(a) Remove any old packing (FIPG) material and be careful not to drop any oil on the contact surfaces of the water outlet and the water outlet housing on the No.2 idler pulley.

- Using a razor blade and gasket scraper, remove ail the old packing (FIPG) material from the gasket surfaces and sealing groove.
- Thoroughly clean all components to remove all the loose material.
- Using a non–residue solvent, clean both sealing surfaces.

(b) Apply seal packing to the sealing groove of the water outlet as shown in the illustration.

Seal packing:

Part No. 08826–00100 or equivalent

- Install a nozzle that has been cut to a 2 – 3 mm (0.08 – 0.12 in.) opening.
- Parts must be assembled within 5 minutes of application. Otherwise the material must be removed and reapplied.
- Immediately remove nozzle from the tube and reinstall cap.

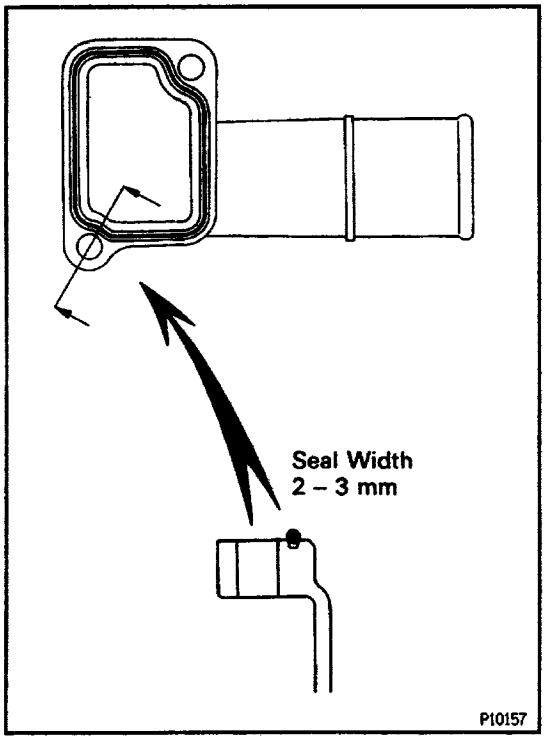

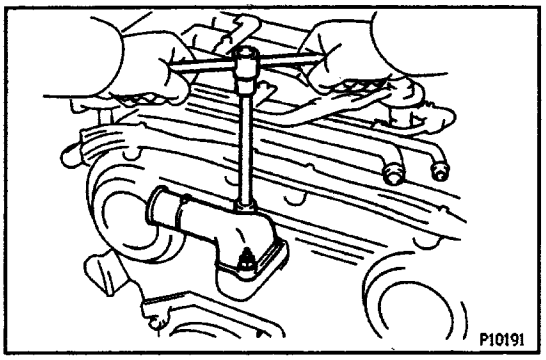

(c) Install the water outlet with the 2 nuts. Alternately tighten the nuts.

Torque: 15 N–m (150 kgf–cm, 11 ft–lbf)

17. INSTALL GENERATOR DRIVE BELT

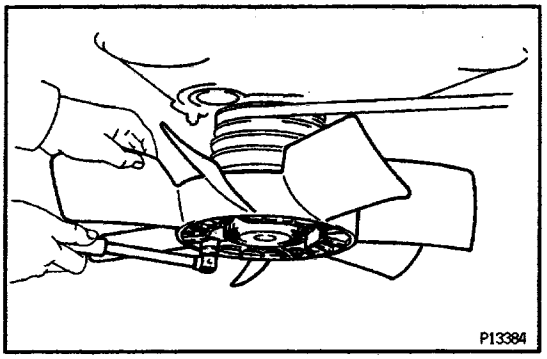

18. INSTALL COOLING FAN

Install the cooling fan with the 4 nuts.

Torque: 5.4 N–m (55 kgf–cm, 48 in.–lbf)

19. INSTALL A/C DRIVE BELT

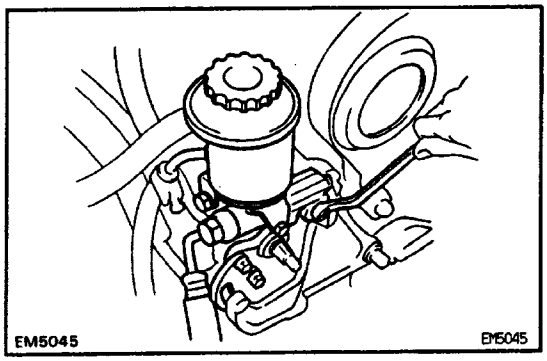

20. INSTALL PS PUMP

21. INSTALL PS PUMP PULLEY AND DRIVE BELT

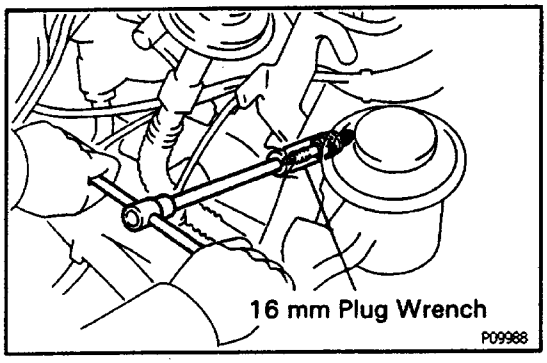

22. INSTALL SPARK PLUGS

Using a 16 mm plug wrench, install the 6 spark plugs.

Torque: 18 N–m (180 kgf.cm, 13 ft–lbf)

23. CONNECT HIGH–TENSION CORDS TO SPARK PLUGS

24. CONNECT NO.2 AND NO.3 AIR HOSES TO AIR PIPE

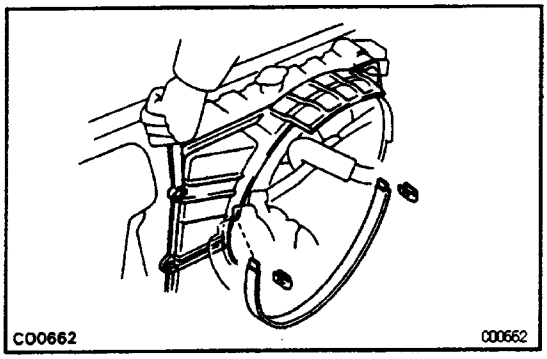

25. INSTALL RADIATOR

(a) Install the radiator with the 4 bolts.

(b) Install the No. 1 fan shroud with the 4 bolts.

(c) Install the No.2 fan shroud with the 2 clips.

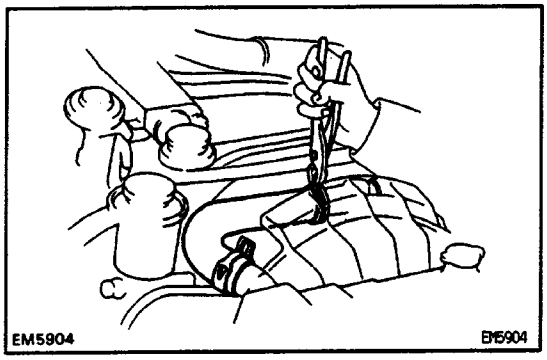

(d) Install the radiator hoses.

(e) A/T only:

Connect the oil cooler hoses.

(f) Connect the reservoir tank hose.

26. FILL WITH ENGINE COOLANT

27. START ENGINE AND CHECK FOR LEAKS

28. RECHECK ENGINE COOLANT LEVEL

TROUBLESHOOTING

Use the table below to help you find the cause of the problem. The numbers indicate the priority of the likely cause of the problem. Check each part in order. If necessary, replace these parts.

	See page	EG2–17	1G–17	EG2–199	EG2–246	EG2–190	EG2–190	EG2–188	EG2–193	I	EG2–193	I	EG2–203	EG2–211	EG2–229	EG2–218	EG2–208	I
	Suspect area / Symptom	RPM Signal Circuit	Ignition Circuit	Heated Oxygen Sensor Circuit	ECT Sensor Circuit	Intake Air Temp. Sensor Circuit	Volume Air Flow Meter Circuit	Throttle Position Sensor Circuit	STA Signal Circuit	Knock Sensor Circuit	PNP Signal Circuit	A/C Signal Circuit	Fuel Pump	Fuel Pressure Regulator	Fuel Lines	Injectors	Cold Start System	Idle Speed Control Valve
Does not start	Engine does not crank																	
	Starter runs – engine does not crank																	
	No Initial combustion	12	2				5						6				13	8
	No combustion				4		1							3		9	10	2
Difficult to start	Engine cranks slowly											2						
	Engine cranks normally	12	13		4	14							7	6	8	16	17	3
	Cold engine				1	6			2				8	7	9	10	5	4
	Hot engine				1	5							8	7	9	10	6	3
Poor idling	Incorrect first idle				3													4
	Nigh engine idle speed				4	6		7			9	8				10	11	5
	Low engine idle speed				1		4									5		2
	Rough idling		18		2		12						7	6	8	16	17	9
	Misfire		4		6		8									9	10	
Poor drivability	Hesitant acceleration			12	10	11	9	8					14	13	15	18	19	
	Backfire			6	3	7	5	4					9	8	10	11		
	Muffler explosion (after fire)			8	3	7	5	6						4		9	10	
	Surging													1		4		
	Knocking									1								
Engine stall	Soon after starting				8		7						3	2	4	9	10	6
	After accelerator pedal depressed						1	3						5	6	7		
	After accelerator pedal released						3											1
	During A/C operation											1						2
	When shifting N to D										1							2
Others	Poor fuel economy			21	16	22	18	17			19	20				14	15	
	Engine overheat									9								
	Engine overcool																	
	Excessive oil consumption																	
	Low oil pressure																	
	High oil pressure																	
	Starter keeps running																	
	Battery often discharges																	

HINT When inspecting a wire harness or circuit, the electrical wiring diagrams at the end of this repair manual should be referred to and the circuits of related systems also should be checked.

	See page	EG2–243	EG2–244	EG2–256	EG2–211	EG2–253	–	–	–	–	ST–15	CL Sec.	ST–4	IG–21	IG–25	EG2–148	–	–
	Suspect area / Symptom	EFI Main Realy	Circuit Opening Relay	Fuel Cut System	Fuel Pressure Control System	Engine Control Module	Fuel Quality	Fuel Leakage	Engine Coolant Leakage	Oil Leakage	Starter Relay	PNP SW or Clutch Start SW	Sterter	Spark Plug	Distributor	EGR System	Accelerator Pedal Link	Brakes Drag Eve When Released
Does not start	Engine does not crank										1	3	2					
	Starter runs – engine does not crank												1					
	No combustion	3	4			14	7								1			
	No complete combustion					11												
Difficult to start	Engine cranks slowly												1					
	Engine cranks normally					18	1							2	15	5		
	Cold engine					11	3											
	Hot engine				4	11	2											
Poor idling	Incorrect first idle					5											1	
	High engine idle speed					12											1	
	Low engine idle speed					6										1		
	Rough idling					19	1							4	5	3		
	Misfire					11	1							3	5	2		
Poor drivability	Hesitant acceleration					20	3							5	6	4		2
	Backfire					12										1		
	Muffler explosion (after fire			1		11												
	Surging					5								2	3			
	Knocking					10	2							3		4		
Engine stall	Soon after starting					11	1									5		
	After accelerator pedal depressed					8								4		2		
	After accelerator pedal released					4										2		
	During A/C operation					3												
	When shifting N to D					3												
Others	Poor fuel economy			8			2	1						9	10	7	3	6
	Engine overheat								1					1				
	Engine overcool																	
	Excessive oil consumption									1								
	Low oil pressure									1								
	High oil pressure																	
	Starter keeps running .										1		2					
	Battery often discharges																	

V05952

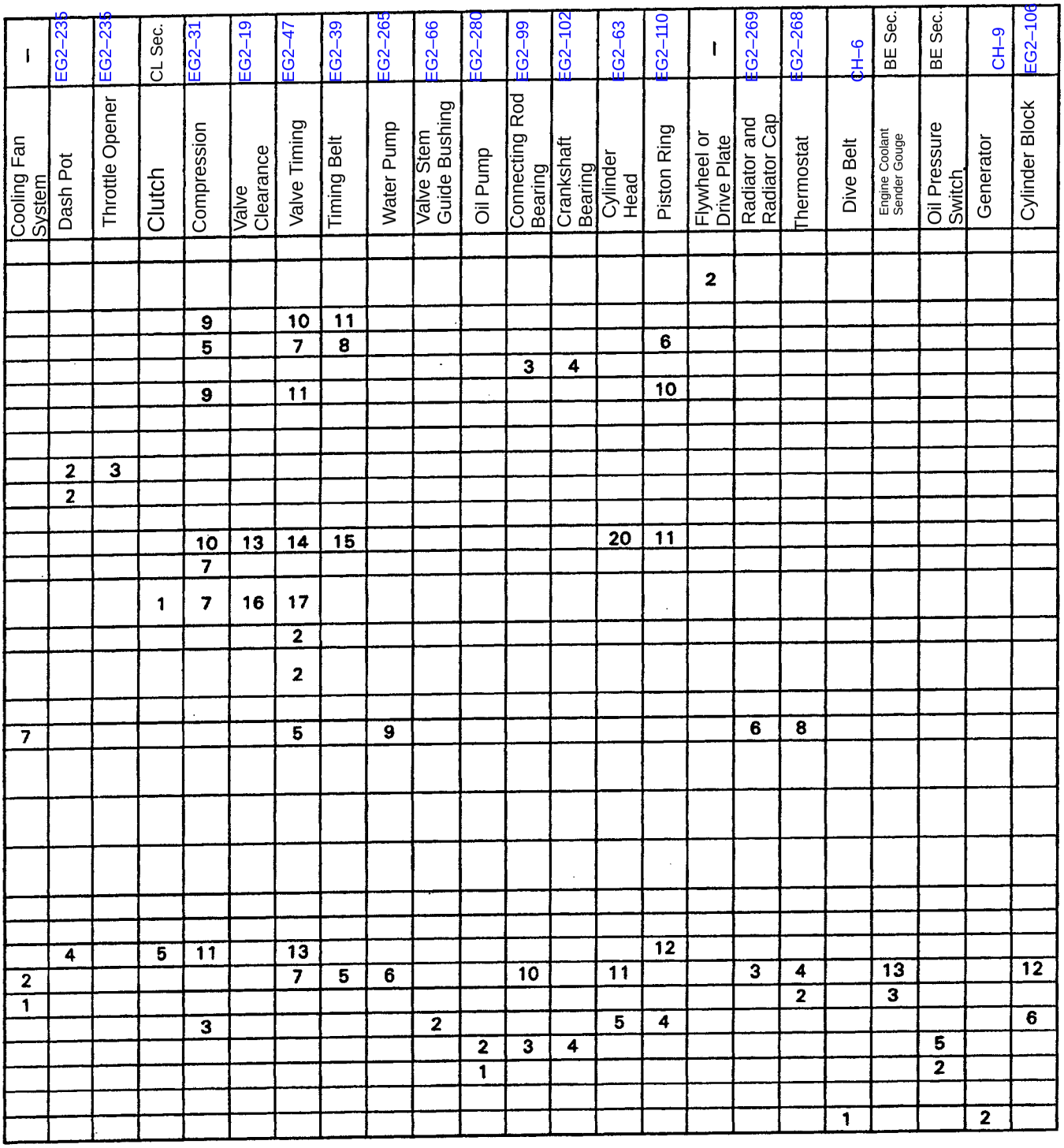
Cooling Fan System
Dash Pot
Throttle Opener
Clutch
Compression
Valve Clearance
Valve Timing
Timing Belt
Water Pump
Valve Stem Guide Bushing
Oil Pump
Connecting Rod Bearing
Crankshaft Bearing
Cylinder Head
Piston Ring
Flywheel or Drive Plate
Radiator and Radiator Cap
Thermostat
Dive Belt
Engine Coolant Sender Gouge
Oil Pressure Switch
Generator
Cylinder Block
–
EG2–235
EG2–235
CL Sec.
EG2–31
EG2–19
EG2–47
EG2–39
EG2–265
EG2–66
EG2–280
EG2–99
EG2–102
EG2–63
EG2–110
–
EG2–269
EG2–268
CH–6
BE Sec.
BE Sec.
CH–9
EG2–106

V03998

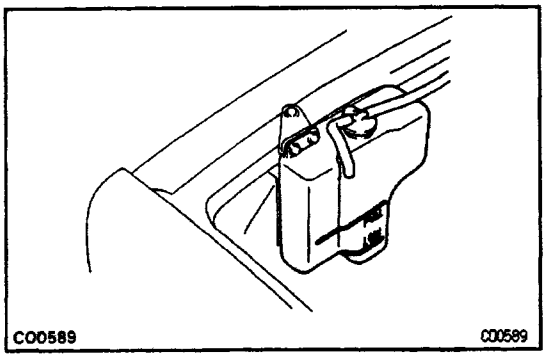

TUNE–UP

ENGINE COOLANT INSPECTION

1. CHECK ENGINE COOLANT LEVEL AT RADIATOR RESERVOIR

The engine coolant level should be between the "LOW" and "FULL" lines.

If low, check for leaks and add engine coolant up to the "FULL" line.

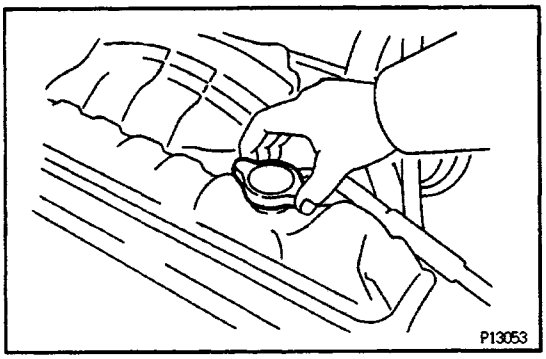

2. CHECK ENGINE COOLANT QUALITY

(a) Remove the radiator cap.

CAUTION: To avoid the danger of being burned, do not remove the radiator cap while the engine and radiator are still hot, as fluid and steam can be blown out under pressure.

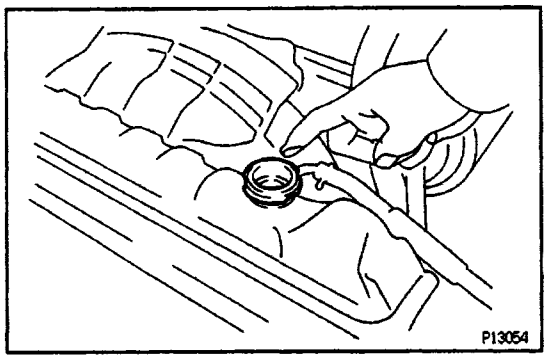

(b) There should not be any excessive deposits of rust or scale around the radiator cap or radiator filler hole, and the coolant should be free from oil.

If excessively dirty, clean the coolant passages and replace the coolant.

Capacity (w/ Heater):

M/T

10.0 liters (10.6 US qts, 8.8 Imp. qts)

A/T

9.8 liters (10.4 US qts, 8.6 Imp. qts.)

HINT:

- Use a good brand of ethylene–glycol base coolant and mix it according to the manufacturer's directions.
- Using coolant which includes more than 50 96 ethylene–glycol (but not more than 70 96) is recommended.

NOTICE:

- **Do not use an alcohol type coolant.**
- **The coolant should be mixed with demineralized water or distilled water.**

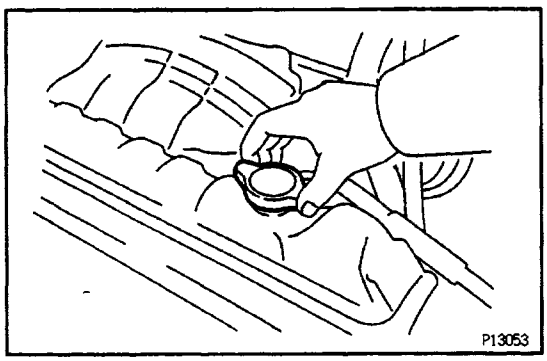

(c) Reinstall the radiator cap.

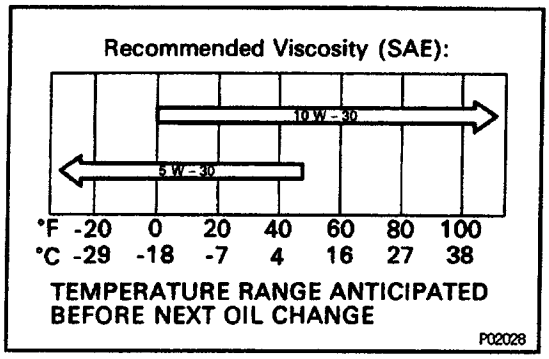

ENGINE OIL INSPECTION

1. CHECK OIL QUALITY

Check the oil for deterioration, entry of water, discoloring or thinning.

If oil quality is visibly poor, replace the oil.

Oil grade:

API grade SH Energy– Conserving ll or ILSAC multigrade engine oil. Recommended viscosity is a: shown in the illustration.

Drain and refill capacity: .

w/ Oil filter change

4.5 liters (4.8 US qts, 4.0 Imp. qts)

w/o Oil filter change

4.2 liters (4.4 US qts, 3.7 Imp, qts)

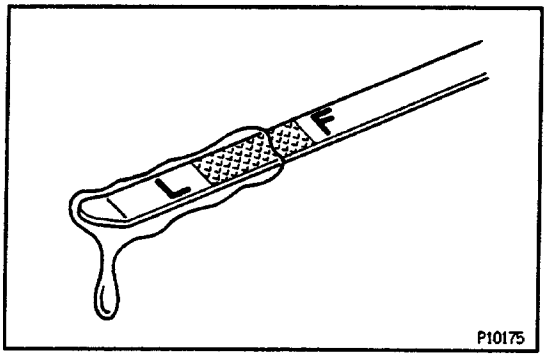

2. CHECK ENGINE OIL LEVEL

The oil level should be between the ”L” and ”F” marks on the dipstick.

If low, check for leakage and add oil up to the ”F” mark.

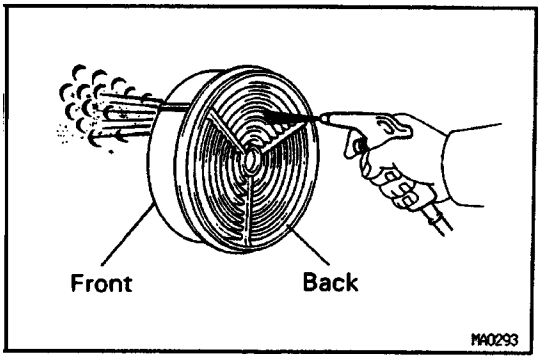

AIR FILTER INSPECTION AND CLEANING

1. REMOVE AIR FILTER

2. INSPECT AND CLEAN AIR FILTER

(a) Visually check that the air filter is not excessively dirty or oily.

HINT: Oiliness may indicate a stuck PCV valve.

!f necessary, replace the air filter.

(b) Clean the air filter with compressed air.

First blow from the inside thoroughly, then blow off the outside of the air filter.

3. REINSTALL AIR FILTER

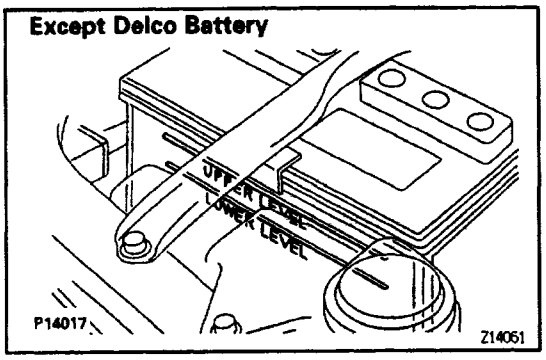

BATTERY INSPECTION

1. Except Delco Battery:

CHECK BATTERY ELECTROLYTE LEVEL AND VOLTAGE

(a) Check the electrolyte quantity of each cell.

If under the lower level, replace the battery (or add distilled water if possible.). Need to check the charging system.

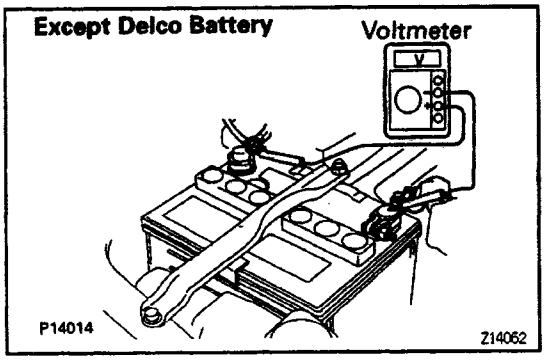

(b) Measure the battery voltage between the terminals negative (–) and positive (+) of the battery.

Standard voltage:

At 20° C (68° F): 12.7 – 12.9 V

HINT:

- Before measuring the voltage, turn the ignition switch OFF and turn off the electrical systems (headlight, blower motor, rear defogger etc.) for 60 seconds to remove the surface charge.
- If the vehicle has been running, wait 5 minutes or more after the vehicle stops before measuring the battery voltage.

  If the voltage is less than specification, charge the battery.

HINT: Check the indicator as shown in the illustration.

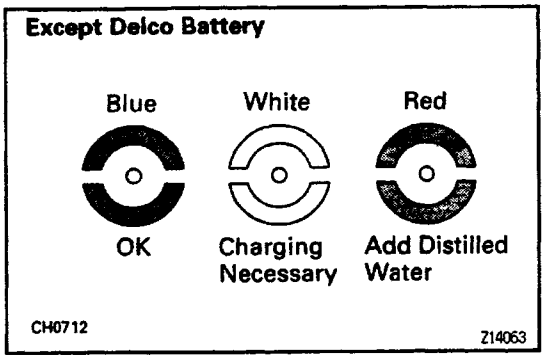

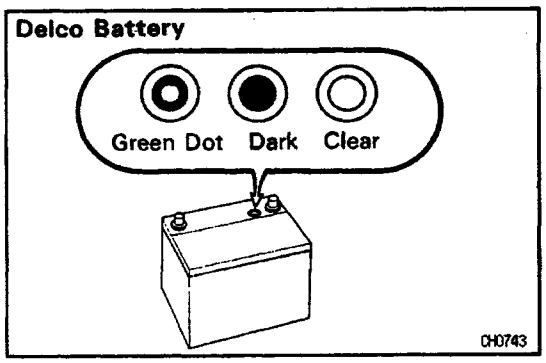

2. Delco Battery:

CHECK HYDROMETER

Green Dot visible:

Battery is adequately charged.

Dark (Green Dot not visible):

Battery must be charged.

Clear or Light Yellow:

Replace battery.

HINT: There is no need to add water during the entire service life of the battery.

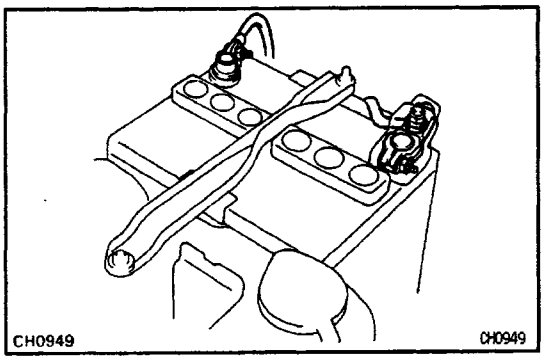

3. CHECK BATTERY TERMINALS. FUSIBLE LINK AND FUSES

(a) Check that the battery terminals are not loose or corroded.

(b) Check the fusible link and fuses for continuity.

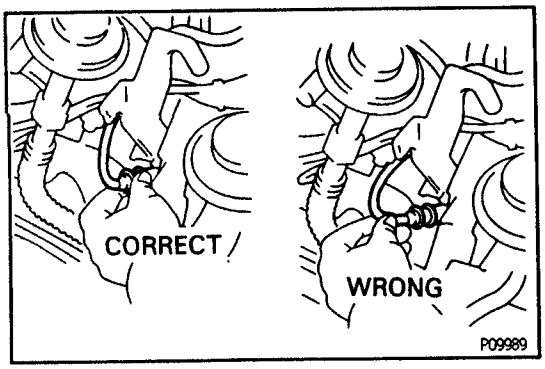

HIGH–TENSION CORDS INSPECTION

1. DISCONNECT HIGH–TENSION CORDS FROM SPARK PLUGS

Disconnect the high – tension cords at the rubber boot.

DO NOT pull on the cords.

NOTICE: Pulling on or bending the cords may damage the conductor inside.

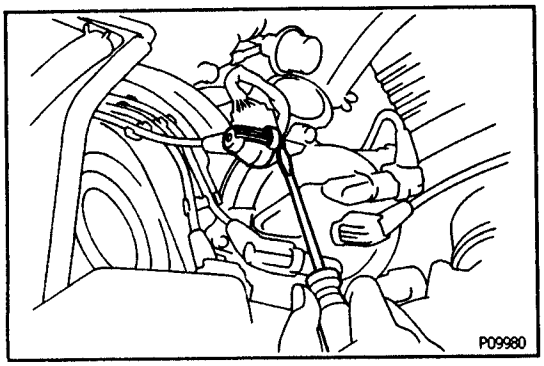

2. DISCONNECT HIGH–TENSION CORDS PROM DISTRIBUTOR CAP AND IGNITION COIL

(a) Using a screwdriver, lift up the lock claw and disconnect the holder from the distributor cap (ignition coil),

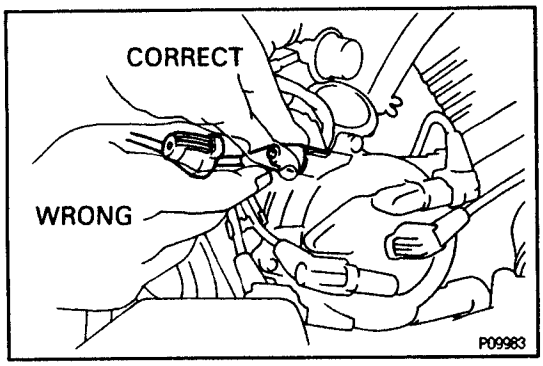

(b) Disconnect the high–tension cord at the grommet.

DO NOT pull on the cord.

NOTICE:

Pulling on or bending the cords may damage the conductor inside.

Do not wipe any of the oil from the grommet after this high–tension cord is disconnected.

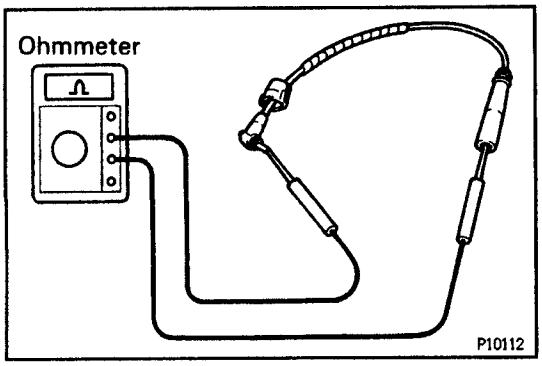

3. INSPECT HIGH –TENSION C4RD RESISTANCE

Using an ohmmeter, measure the resistance.

Maximum resistance:

25 kΩ per cord

If the resistance is greater than maximum, check the terminals. If necessary, replace the high – tension cord.

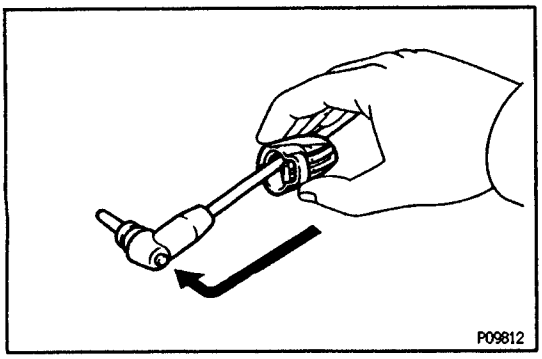

4. RECONNECT HIGH–TENSION CORDS TO DISTRIBUTOR CAP AND IGNITION COIL

(a) Assemble the holder and grommet.

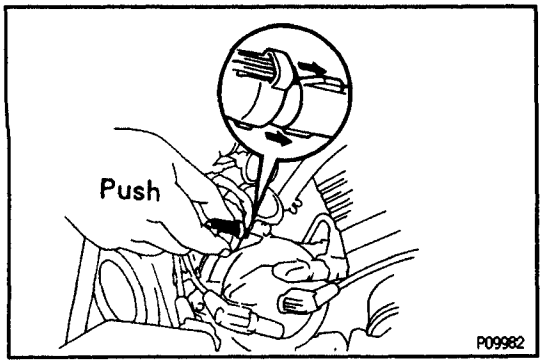

(b) Align the spline of the distributor (ignition coil) with the spline of the holder, and push in the cord.

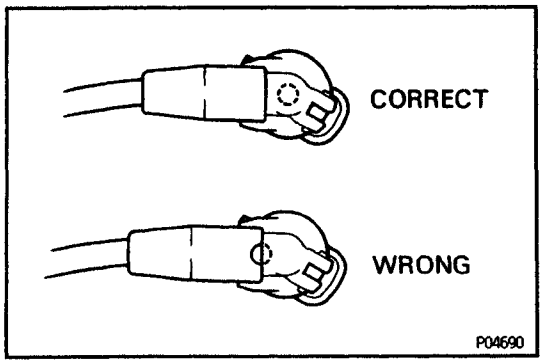

NOTICE: Check that the holder is correctly installed to the grommet and distributor cap a: shown in the illustration.

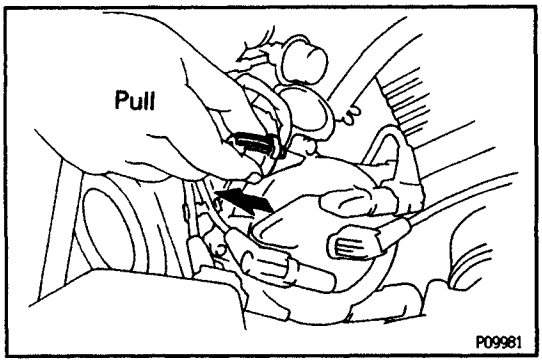

(c) Check that the lock claw of the holder is engaged by lightly pulling the holder.

5. RECONNECT HIGH–TENSION CORDS TO SPARK PLUGS

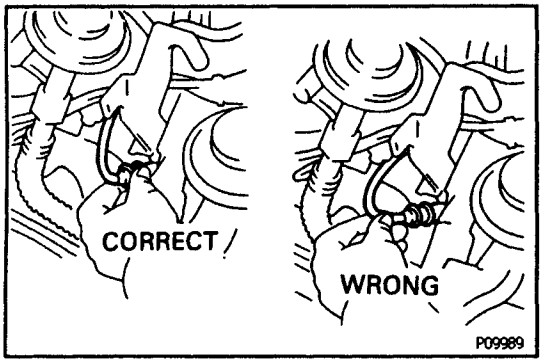

SPARK PLUGS INSPECTION

1. DISCONNECT HIGH–TENSION CORDS FROM SPARK PLUGS

Disconnect the high – tension cords at the rubber boot. Do not pull on the cords.

NOTICE: Pulling on or bending the cords may damage the conductor inside.

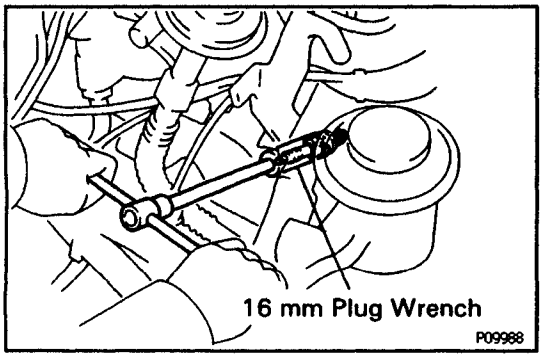

2. REMOVE SPARK PLUGS

Using a 16 mm plug wrench, remove the 6 spark plugs.

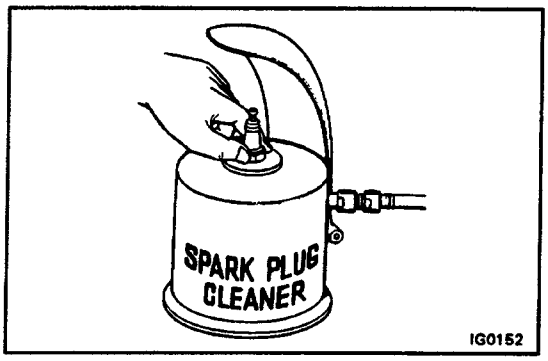

3. CLEAN SPARK PLUGS

Using a spark plug cleaner or wire brush, clean the spark plug.

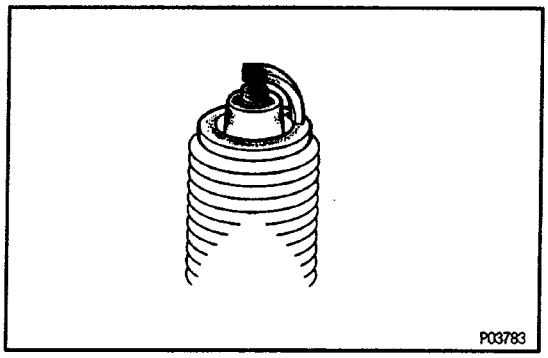

4. VISUALLY INSPECT SPARK PLUGS

Check the spark plug for electrode wear, thread damage and insulator damage.

If abnormal, replace the spark plug.

Recommended spark plug:

ND

K16R–U

NGK

BKR5EYA

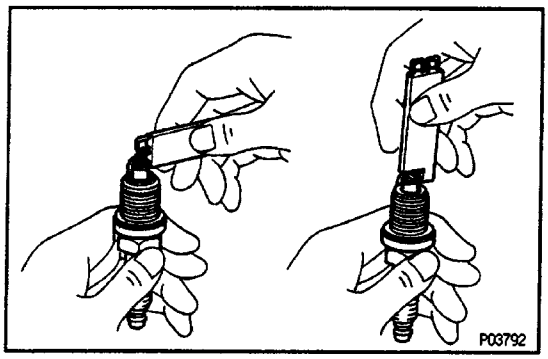

5. ADJUST ELECTRODE GAP

Carefully bend the outer electrode to obtain the correct electrode gap.

Correct electrode gap:

0.8 mm (0.031 in.)

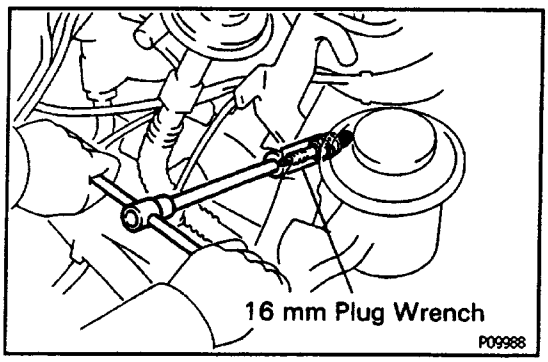

8. INSTALL SPARK PLUGS

Using a 16 mm plug wrench, install and torque the 6 spark plug.

Torque: 18 N–m (180 kgf–cm, 13 ft–lbf)

7. RECONNECT HIGH–TENSION CORDS TO SPARK PLUGS

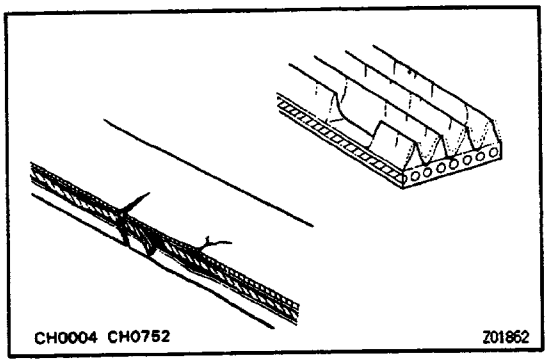

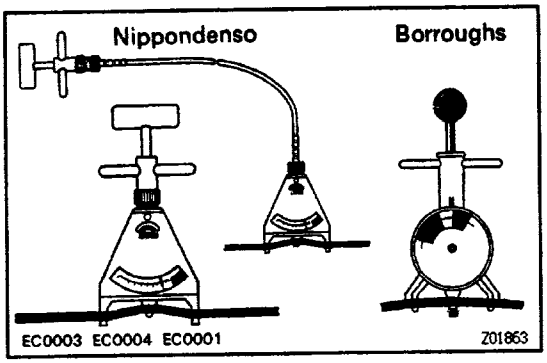

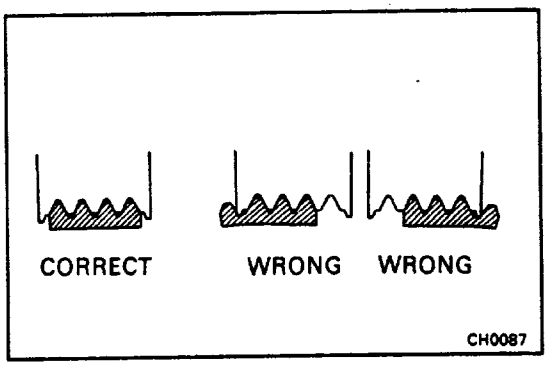

GENERATOR DRIVE BELT INSPECTION

INSPECT DRIVE BELTS

(a) Visually check the belt for excessive wear, frayed cords etc.
If necessary, replace the drive belt.
HINT: Cracks on the rib side of a belt are considered acceptable. If the belt has chunks missing from the ribs, it should be replaced.

(b) Using a belt tension gauge, measure the belt tension.

Belt tension gauge:
BTG–20 (95506–00020) for Nippondenso
No. BT–33–73F for Borroughs
Drive belt tension:
New belt
160 ± 20 lbf
Used belt
100 ± 20 lbf

If necessary, adjust the belt tension.
HINT:

- ”New belt” refers to a belt which has been used less than 5 minutes on a running engine.
- ”Used belt” refers to a belt which has been used on a running engine for 5 minutes or more.
- After installing the belt, check that it fits properly) in the ribbed grooves.
- Check by hand to confirm that the belt has no1 slipped out of the groove on the bottom of the pulley.
- After installing a new belt, run the engine for about 5 minutes and recheck the belt tension.

VALVE CLEARANCE INSPECTION AND ADJUSTMENT

HINT: Inspect and adjust the valve clearance when the engine is cold.

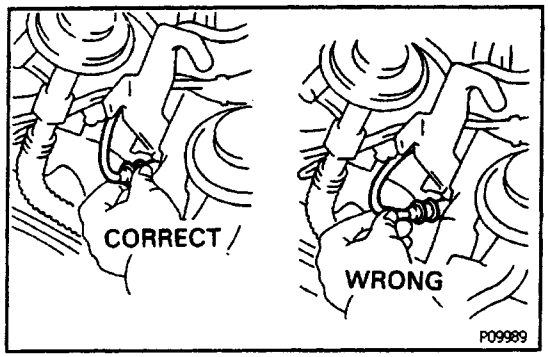

1. DISCONNECT HIGH–TENSION CORDS FROM SPARK PLUGS

Disconnect the high – tension cords at the rubber boot. Do not pull on the cords.

NOTICE: Pulling on or bending the cords may damage the conductor inside.

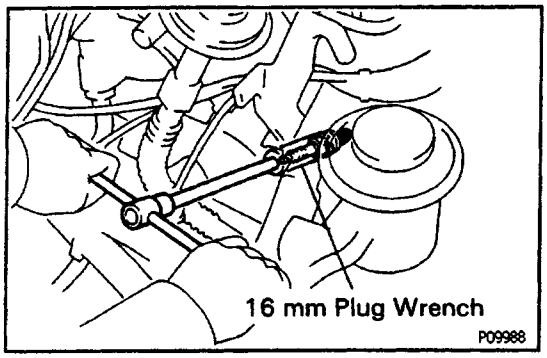

2. REMOVE SPARK PLUGS

Using a 16 mm plug wrench, remove the6 spark plugs.

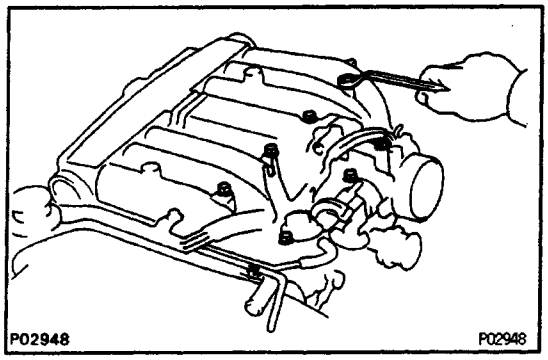

3. REMOVE AIR INTAKE CHAMBER

(See step 17 in cylinder heads removal in cylinder head)

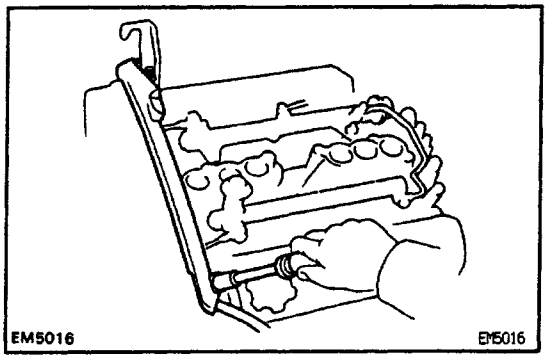

4. REMOVE ENGINE WIRE

Remove the 2 bolts and engine wire.

5. REMOVE CYLINDER HEAD COVERS

(See step 34 in cylinder heads removal in cylinder head)

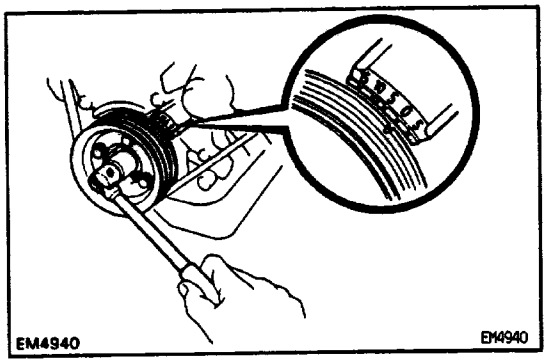

6. SET NO.1 CYLINDER TO TDC/COMPRESSION

(a) Turn the crankshaft pulley and align its groove with timing mark '0' of the No.1 timing belt cover.

(b) Check that the valve lifters on the No.1 cylinder are loose and valve lifters on the No.4 are tight.
If not, turn the crankshaft 1 revolution (360°) and align the mark as above.

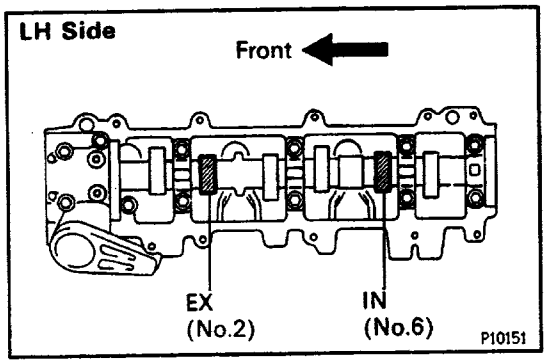

7. INSPECT VALVE CLEARANCE

(a) Check the clearance of the IN (No.6) and EX (No.2) valves.

- Using a feeler gauge, measure the clearance between the valve lifter and camshaft.
- Record the out – of – specification valve clearance measurements. They will be used later to determine the required replacement adjusting shim.

Valve clearance (Cold):

Intake

0.18 – 0.28 mm (0.007 – 0.011 in.)

Exhaust

0.22 – 0.32 mm (0.009 – 0.013 in.)

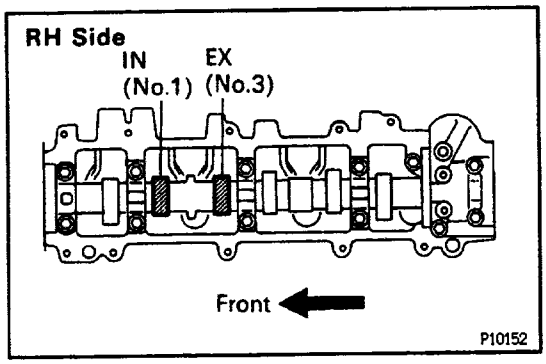

(b) Turn the crankshaft 1/3 revolution (120°), check the clearance of the IN (No.1) and EX (No.3) valves. Meas me the valve clearance.
(See procedure in step (a))

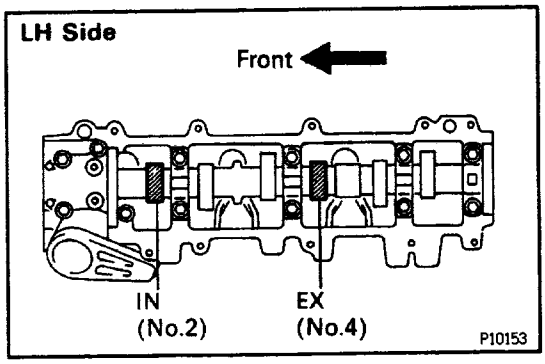

(c) Turn the crankshaft 1/3 revolution (120°), check this clearance of the IN (No.2) and EX (No.4) valves. Meas me the valve clearance.
(See procedure in step (a))

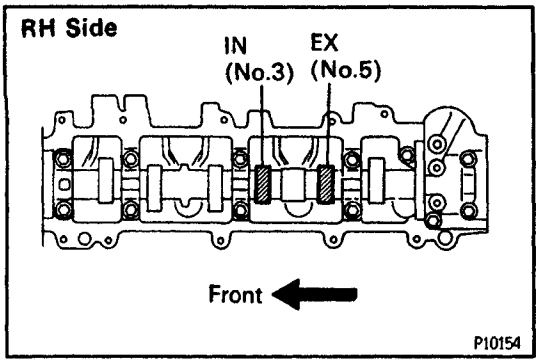

(d) Turn the crankshaft 1/3 revolution (120°), check the clearance of the IN (No.3) and EX (No.5) valves. Measure the valve clearance.
(See procedure in step (a))

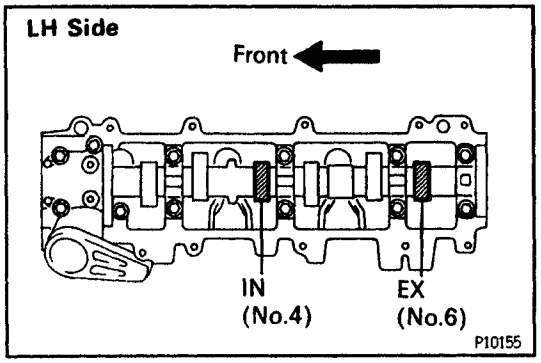

(e) Turn the crankshaft 1/3 revolution (120°), check the clearance of the IN (No.4) and EX (No.6) valves. Measure the valve clearance.
(See procedure in step (a))

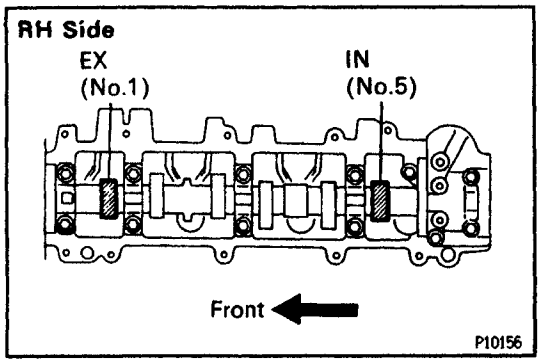

(f) Turn the crankshaft 1/3 revolution (120°), check the clearance of the IN (No.5) and EX (No–1) valves. Measure the valve clearance.
(See procedure in step (a))

8. ADJUST VALVE CLEARANCE

(a) Remove the adjusting shim.

- Turn the crankshaft so that the cam lobe of the camshaft on the adjusting valve upward.
- Position the notch of the valve lifter facing the spark plug side.

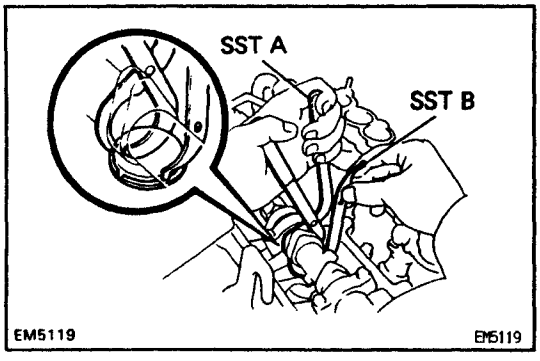

- Using SST (A), press down the valve lifter and place SST

(B) between the camshaft and valve lifter. Remove SST (A).
SST 09248–55040 (09248–05410, 09248–05420)

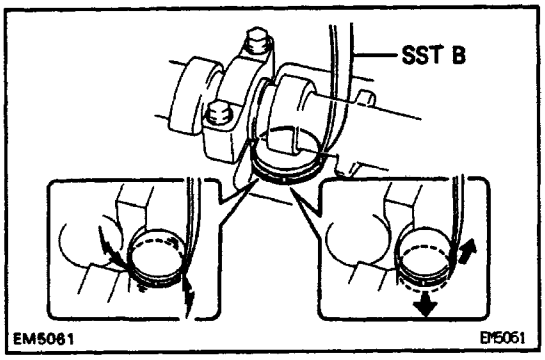

HINT: For easy removal of the shim, when setting SST
B, set it on the lifter so there is a wide space in the removal direction.

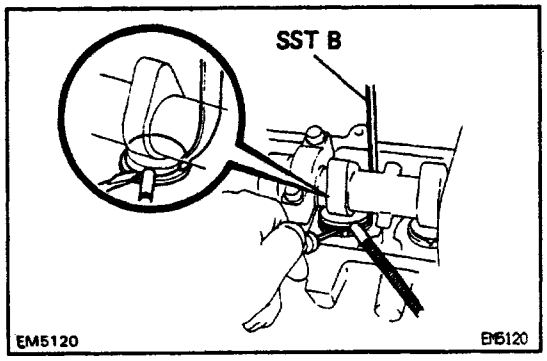

- **Remove the adjusting shim with a small screwdriver and magnetic finger.**

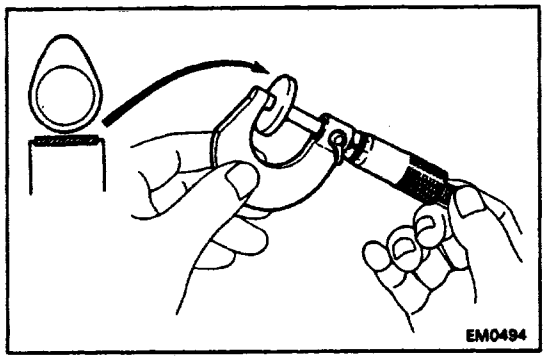

(b) Determine the replacement adjusting shim size by following the Formula or charts on the next 2 pages:

- Using a micrometer, measure the thickness of the removed shim.
- Calculate the thickness of a new shim so that the valve clearance comes within specified value.
  T ..... Thickness of removed shim
  A ..... Measured valve clearance
  N ..... Thickness of new shim
  Intake:
  N = T + (A – 0.23 mm (0.009 in.))
  Exhaust:
  N = T + (A – 0.27 mm (0.011 in.))
- Select a new shim with a thickness as close as possible to the calculated value.

HINT: Shims are available in 25 sizes in increments of 0.05 mm (0.0020 in.), from 2.20 mm (0.0984 in.) to 3.40 mm (0.1299 in.).

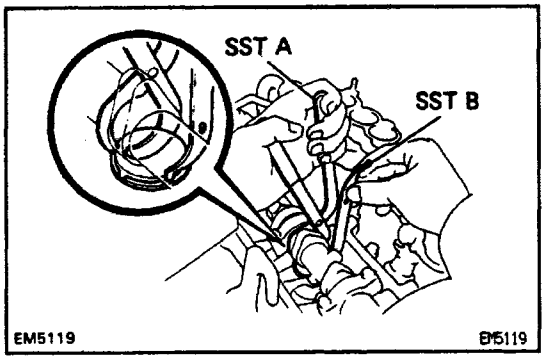

(c) Install a new adjusting shim.

- Place a new adjusting shim on the valve lifter.
- Using SST (A), press down the valve lifter and remove SST (B).
  SST 09248–55440 (09248–05410, 09248–05420)

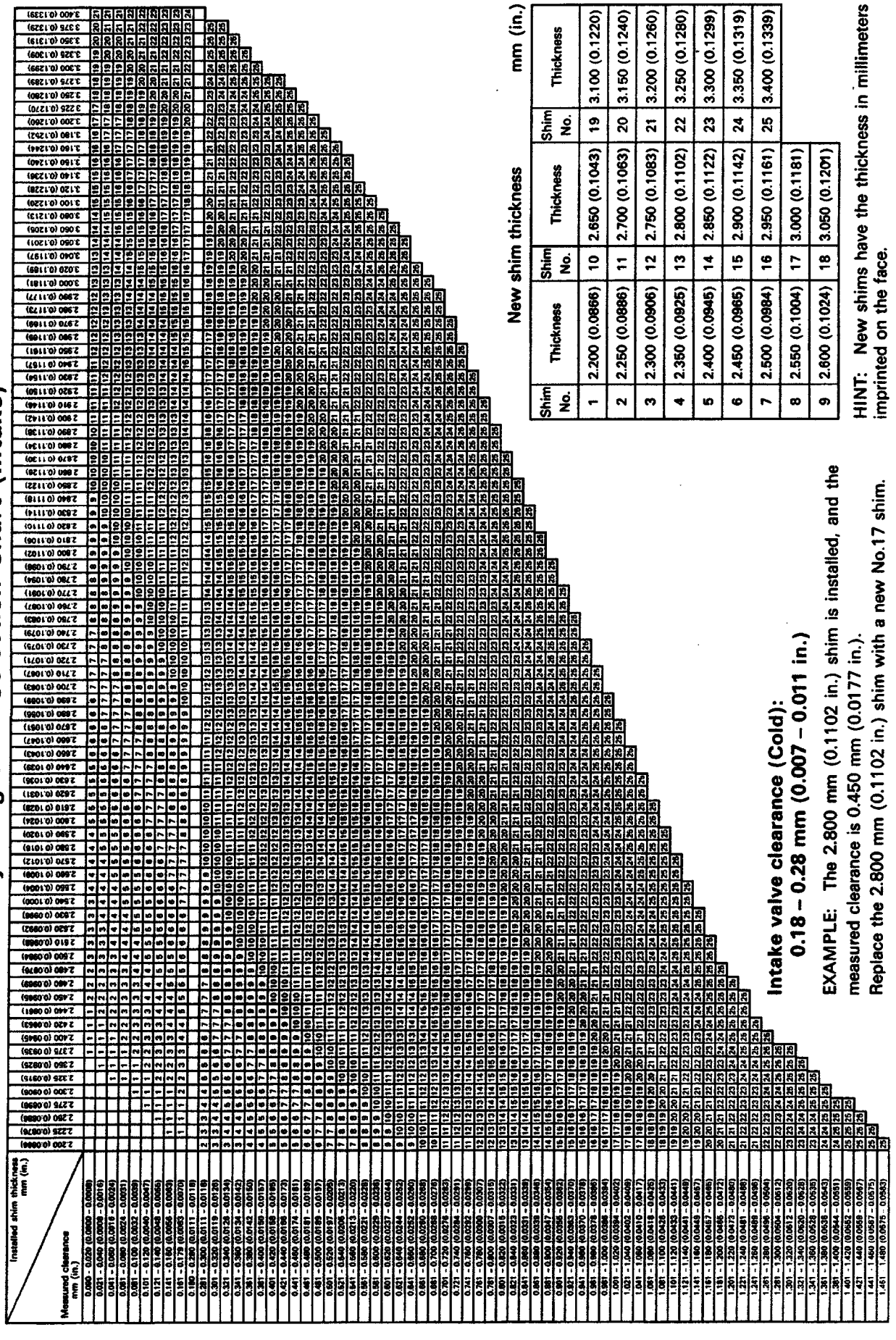
Adjusting Shim Selection Chart (Intake)
Installed shim thickness mm (in.)
Measured clearance mm (in.)
Intake valve clearance (Cold):
0.18 – 0.28 mm (0.007 – 0.011 in.)
EXAMPLE: The 2.800 mm (0.1102 in.) shim is installed, and the measured clearance is 0.450 mm (0.0177 in.).
Replace the 2.800 mm (0.1102 in.) shim with a new No.17 shim.
New shim thickness mm (in.)
Shim No. | Thickness | Shim No. | Thickness | Shim No. | Thickness
1 | 2.200 (0.0866) | 10 | 2.650 (0.1043) | 19 | 3.100 (0.1220)
2 | 2.250 (0.0886) | 11 | 2.700 (0.1063) | 20 | 3.150 (0.1240)
3 | 2.300 (0.0906) | 12 | 2.750 (0.1083) | 21 | 3.200 (0.1260)
4 | 2.350 (0.0925) | 13 | 2.800 (0.1102) | 22 | 3.250 (0.1280)
5 | 2.400 (0.0945) | 14 | 2.850 (0.1122) | 23 | 3.300 (0.1299)
6 | 2.450 (0.0965) | 15 | 2.900 (0.1142) | 24 | 3.350 (0.1319)
7 | 2.500 (0.0984) | 16 | 2.950 (0.1161) | 25 | 3.400 (0.1339)
8 | 2.550 (0.1004) | 17 | 3.000 (0.1181)
9 | 2.600 (0.1024) | 18 | 3.050 (0.1201)
HINT: New shims have the thickness in millimeters imprinted on the face.

V02186

Adjusting Shim Selection Chart (Exhaust)

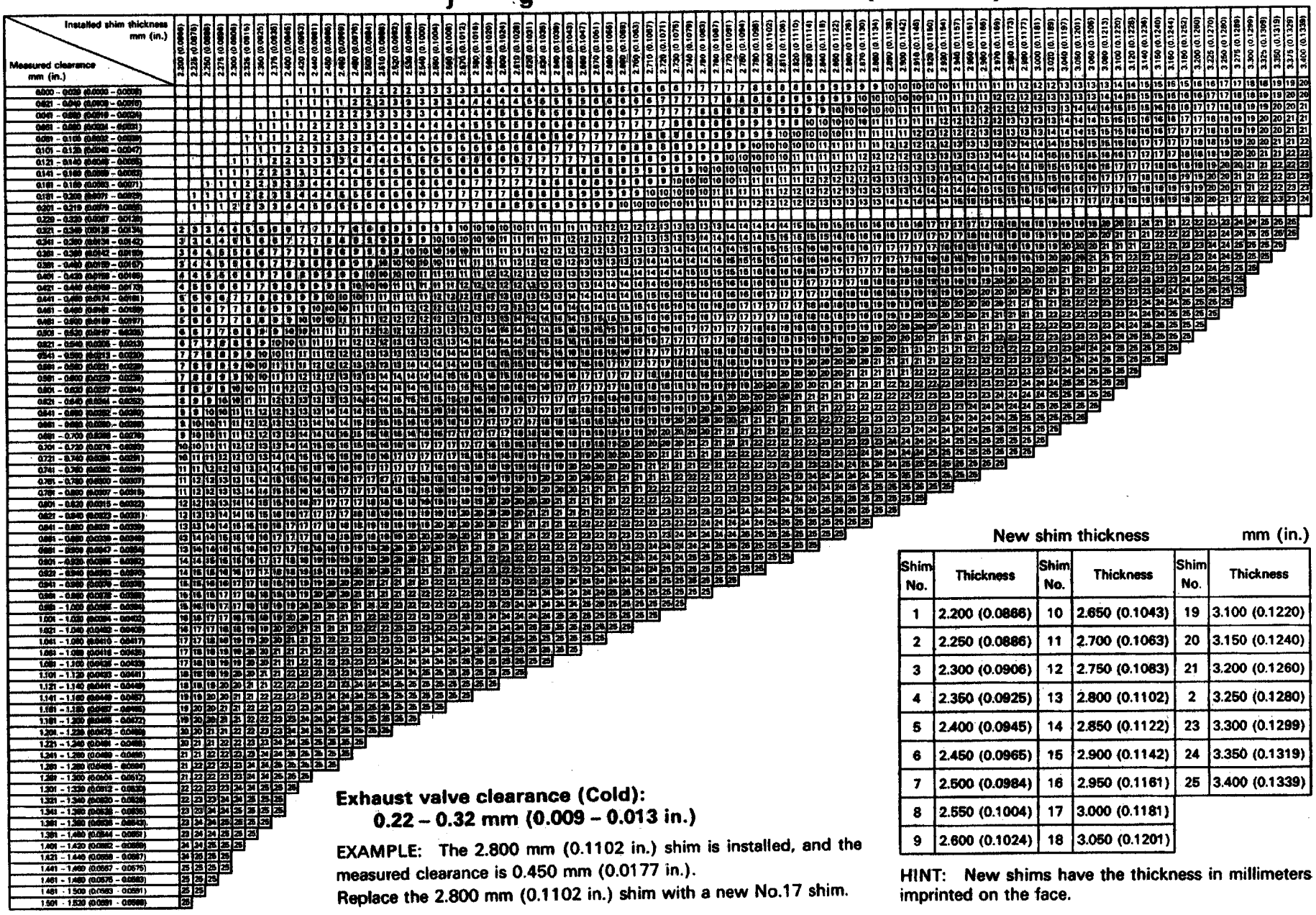

Exhaust valve clearance (Cold):
0.22 – 0.32 mm (0.009 – 0.013 in.)

EXAMPLE: The 2.800 mm (0.1102 in.) shim is installed, and the measured clearance is 0.450 mm (0.0177 in.).
Replace the 2.800 mm (0.1102 in.) shim with a new No.17 shim.

New shim thickness mm (in.)

Shim No.	Thickness	Shim No.	Thickness	Shim No.	Thickness
1	2.200 (0.0866)	10	2.650 (0.1043)	19	3.100 (0.1220)
2	2.250 (0.0886)	11	2.700 (0.1063)	20	3.150 (0.1240)
3	2.300 (0.0906)	12	2.750 (0.1083)	21	3.200 (0.1260)
4	2.350 (0.0925)	13	2.800 (0.1102)	2	3.250 (0.1280)
5	2.400 (0.0945)	14	2.850 (0.1122)	23	3.300 (0.1299)
6	2.450 (0.0965)	15	2.900 (0.1142)	24	3.350 (0.1319)
7	2.500 (0.0984)	16	2.950 (0.1161)	25	3.400 (0.1339)
8	2.550 (0.1004)	17	3.000 (0.1181)		
9	2.600 (0.1024)	18	3.050 (0.1201)		

HINT: New shims have the thickness in millimeters imprinted on the face.

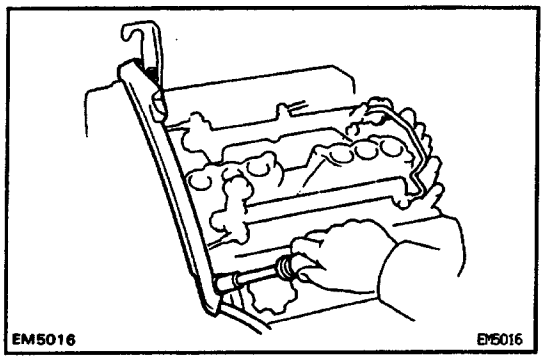

9. INSTALL CYLINDER HEAD COVERS

(See step 7 in cylinder heads installation in cylinder head)

10. INSTALL ENGINE WIRE

Install the engine wire with the 2 bolts.

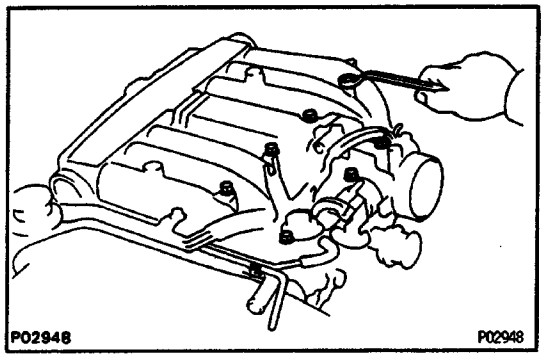

11. INSTALL AIR INTAKE CHAMBER

(See step 24 in cylinder heads installation in cylinder head)

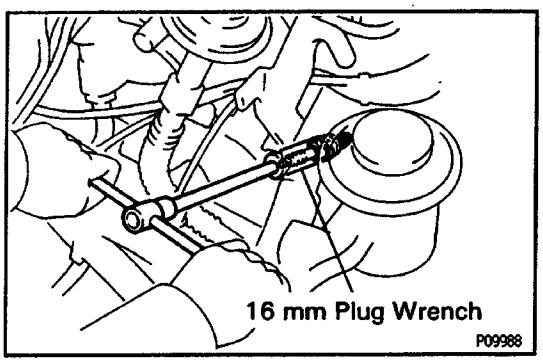

12. INSTALL SPARK PLUGS

Using a 16 mm plug wrench, install the 6 spark plugs.

Torque: 18 N–m (180 kgf–cm, 13 ft–lbf)

13. RECONNECT HIGH–TENSION CORDS TO SPARK PLUGS

IGNITION TIMING INSPECTION AND ADJUSTMENT

1. WARM UP ENGINE

Allow the engine to warm up to normal operating temperature.

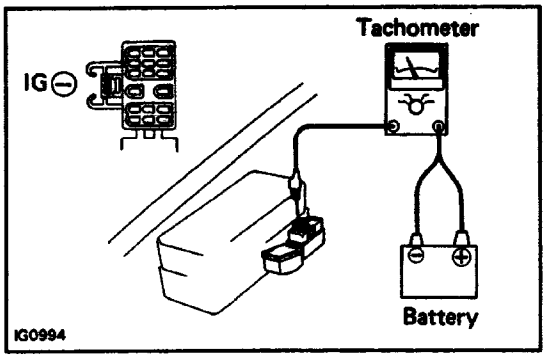

2. CONNECT TACHOMETER AND TIMING LIGHT TO ENGINE

Connect the test probe of a tachometer to terminal IG (–) of the DLC1.

NOTICE:

- **Never allow the tachometer terminal to touch ground a: it could result In damage to the igniter and/or Ignition coil.**
- **As some tachometers are not compatible with this**
  Ignition system, we recommend that you confirm the compatibility of your unit before use.

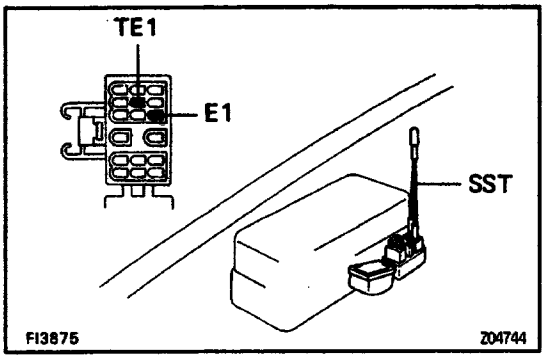

3. ADJUST IGNITION TIMING

(a) Using SST, connect terminals TE1 and E1 of the DLC1.
SST 09843–18020

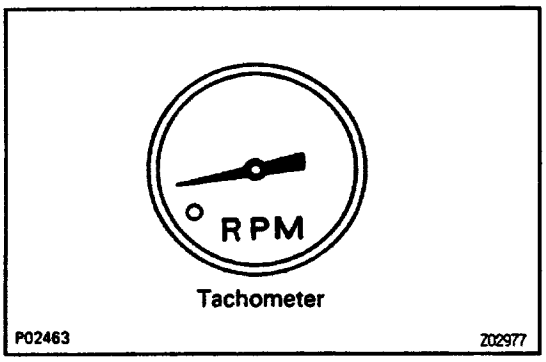

(b) Check the idle speed.
Idle speed:
800 ± 50 rpm

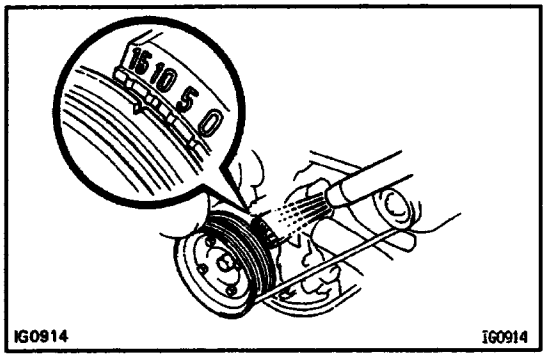

(c) Using a timing light, check the ignition timing.
Ignition timing:
10 ° BTDC @ idle
(Transmission in neutral position)

(d) Loosen the hold–down bolt. and adjust by turning the distributor.

(e) Tighten the hold–down bolt, and recheck the ignition timing.

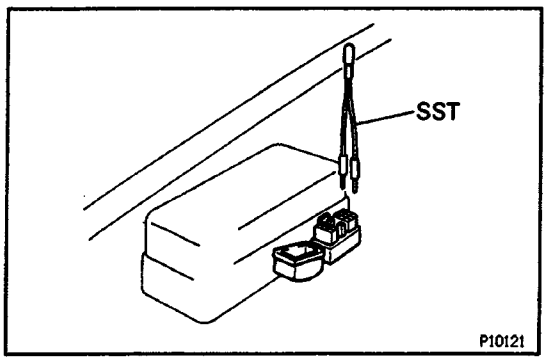

(f) Remove the SST from the DLC 1.
SST 09843–18020

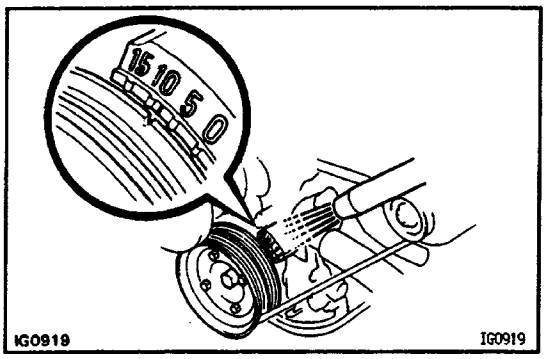

4. FURTHER CHECK IGNITION TIMING

Check that the ignition timing advances.

Ignition timing:

8 ° BTDC @ idle

5. DISCONNECT TACHOMETER AND TIMING LIGHT FROM ENGINE

IDLE SPEED INSPECTION AND ADJUSTMENT

1. INITIAL CONDITIONS

(a) Engine at normal operating temperature
(b) Air cleaner installed
(c) All pipes and hoses of air induction system connected
(d) All accessories switched OFF
(e) All vacuum lines properly connected

HINT: All vacuum hoses for EGR systems, etc. should be properly connected.

(f) MFI system wiring connectors fully plugged
(g) Ignition timing set correctly
(h) Transmission in neutral position

2. CONNECT TACHOMETER

Connect the test probe of a tachometer to terminal IG (–) of the DLC1.

NOTICE:

- **Never allow the tachometer terminal to touch ground as it could result in damage to the igniter and/or ignition coil.**
- **A: some tachometers are not compatible with this ignition system, we recommend that you confirm the compatibility of your unit before use.**

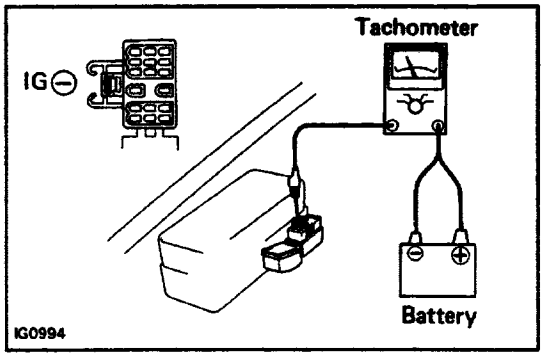

3. ADJUST IDLE SPEED

(a) Race the engine speed at 2,500 rpm for approx. 90 seconds.

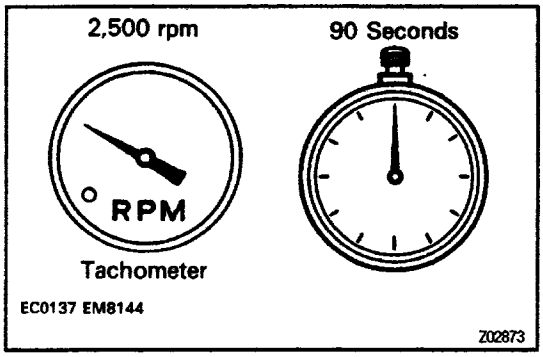

(b) Check the idle speed.

Idle speed:
800 ± 50 rpm

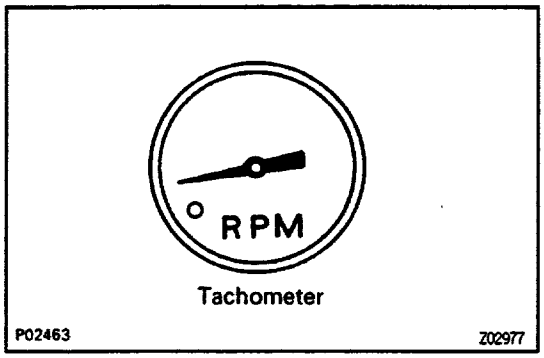

(c) Adjust the idle speed by turning the idle speed adjusting screw.

4. DISCONNECT TACHOMETER

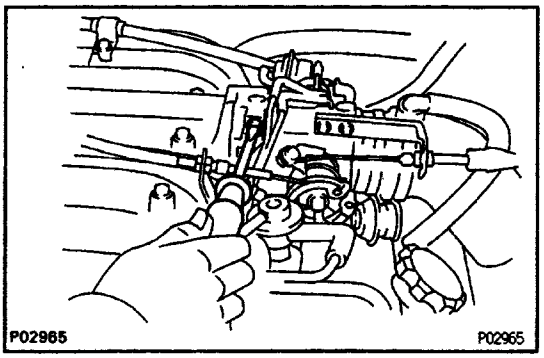

LUBRICATION SYSTEM

DESCRIPTION

A fully pressurized, fully filtered lubrication system is used in this engine.

OPERATION

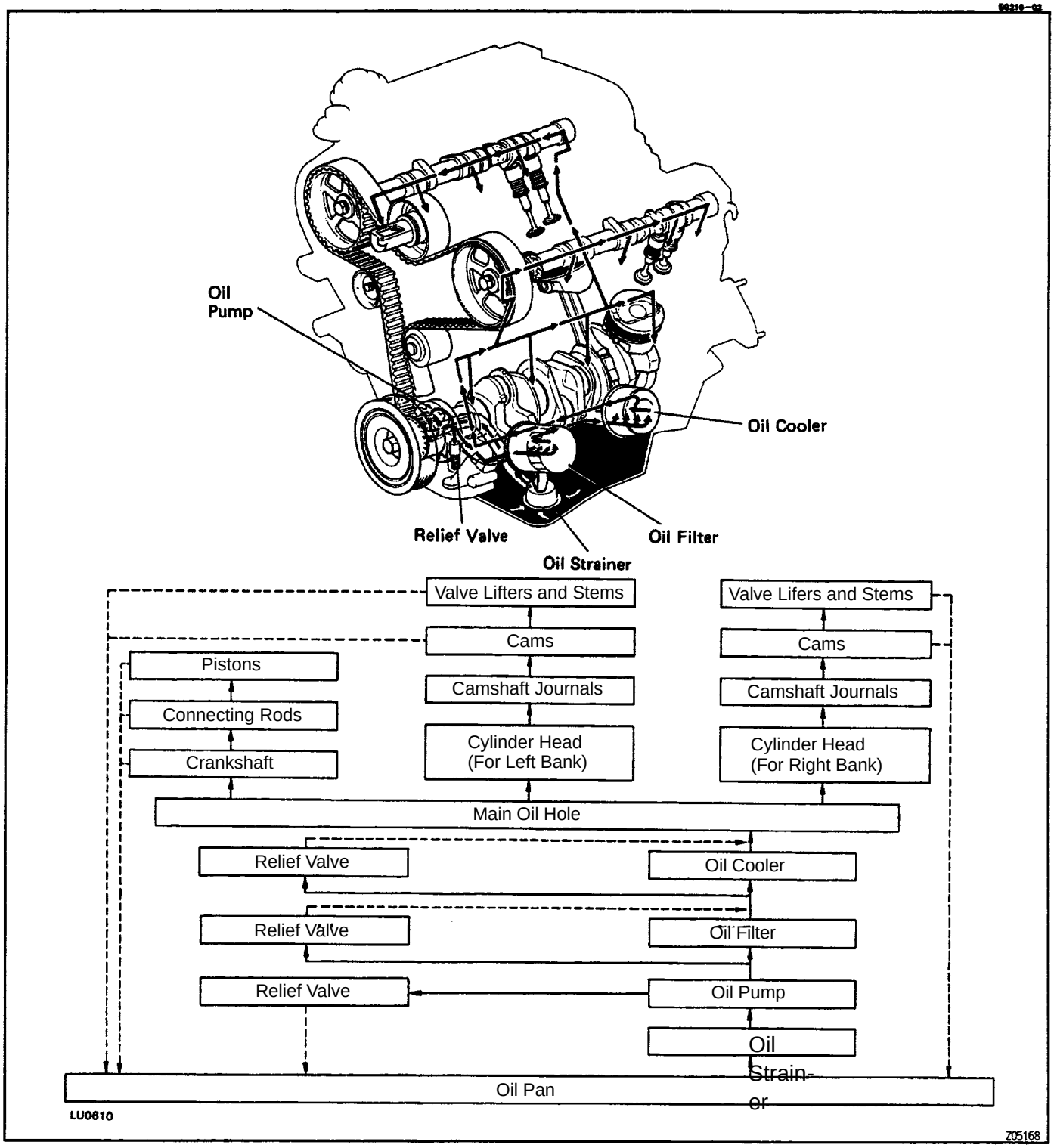

OIL AND FILTER REPLACEMENT

NOTICE:

- **Prolonged and repeated contact with mineral oil will result in the removal of natural fats from the skin. leading to dryness, irritation and dermatitis. In addition, used engine oil contains potentially harmful contaminants which may cause skin cancer. Adequate means of skin protection and washing facilities should be provided.**
- **Cars should be taken, therefore, when changing engine oil, to minimize the frequency and length of time your skin is exposed to used engine oil. Protective clothing and gloves, that cannot be penetrated by oil, should be worn. The skin should be thoroughly washed with soap and water, or use waterless hand cleaner, to remove any used engine oil. Do not use gasoline, thinners, or solvents.**
- **In order to preserve the environment, used oil and used oil filters must be disposed of only at designated disposal sites.**

1. DRAIN ENGINE OIL

(a) Remove the oil filler cap.
(b) Remove the oil dipstick.
(c) Remove the oil drain plug and drain the oil into a container.

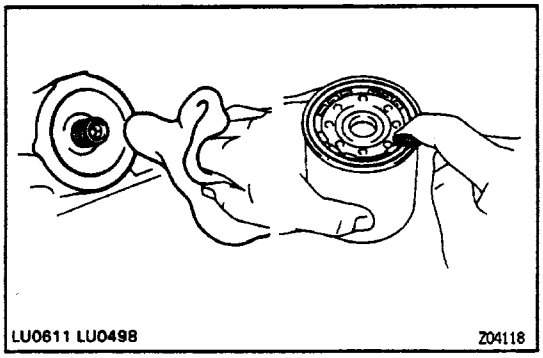

2. REPLACE OIL FILTER

(a) Using SST, remove the oil filter (located on left side of the cylinder block).
SST 08228–07500
(b) Clean the filter contact surface on the filter mounting.
(c) Apply clean engine oil to the gasket of a new oil filter.

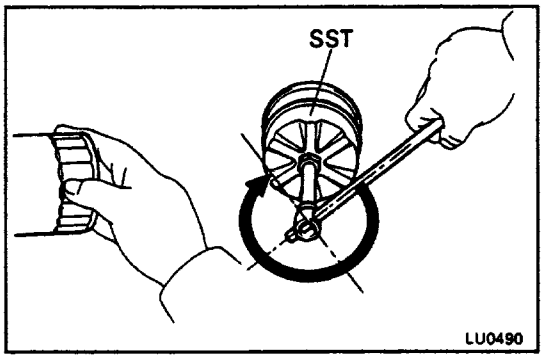

(d) Tighten the filter by hand until the gasket contacts the seat of the filter mounting. Then using SST, give it an additional 3/4 turn to seat the filter.
SST 09228–07500

3. FILL WITH ENGINE OIL

(a) Clean and install the oil drain plug with a new gasket.

(b) Fill the engine with new oil, API grade SH, Energy–Conserving 1I or ILSAC multigrade and recommended viscosity oil.

Oil capacity:

Drain and refill

w/o Oil filter change

4.2 liters (4.4 US qts, 3.7 Imp. qts)

w/ Oil filter change

4.5 liters (4.8 US qts, 4.0 Imp. qts)

Dry fill

5.4 liters (5.7 US qts, 4.8 Imp. qts)

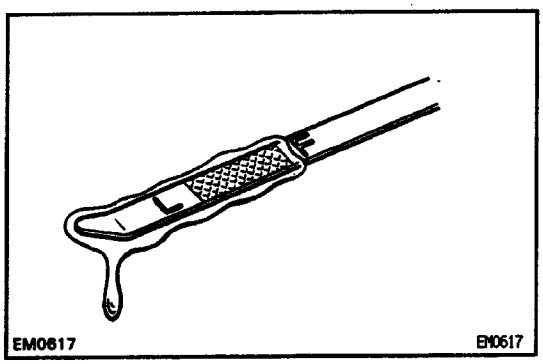

4. START ENGINE AND CHECK FOR LEAKS

5. RECHECK ENGINE LEVEL

Recheck the engine oil level and refill as necessary.

OIL COOLER

COMPONENTS FOR REMOVAL AND INSTALLATION

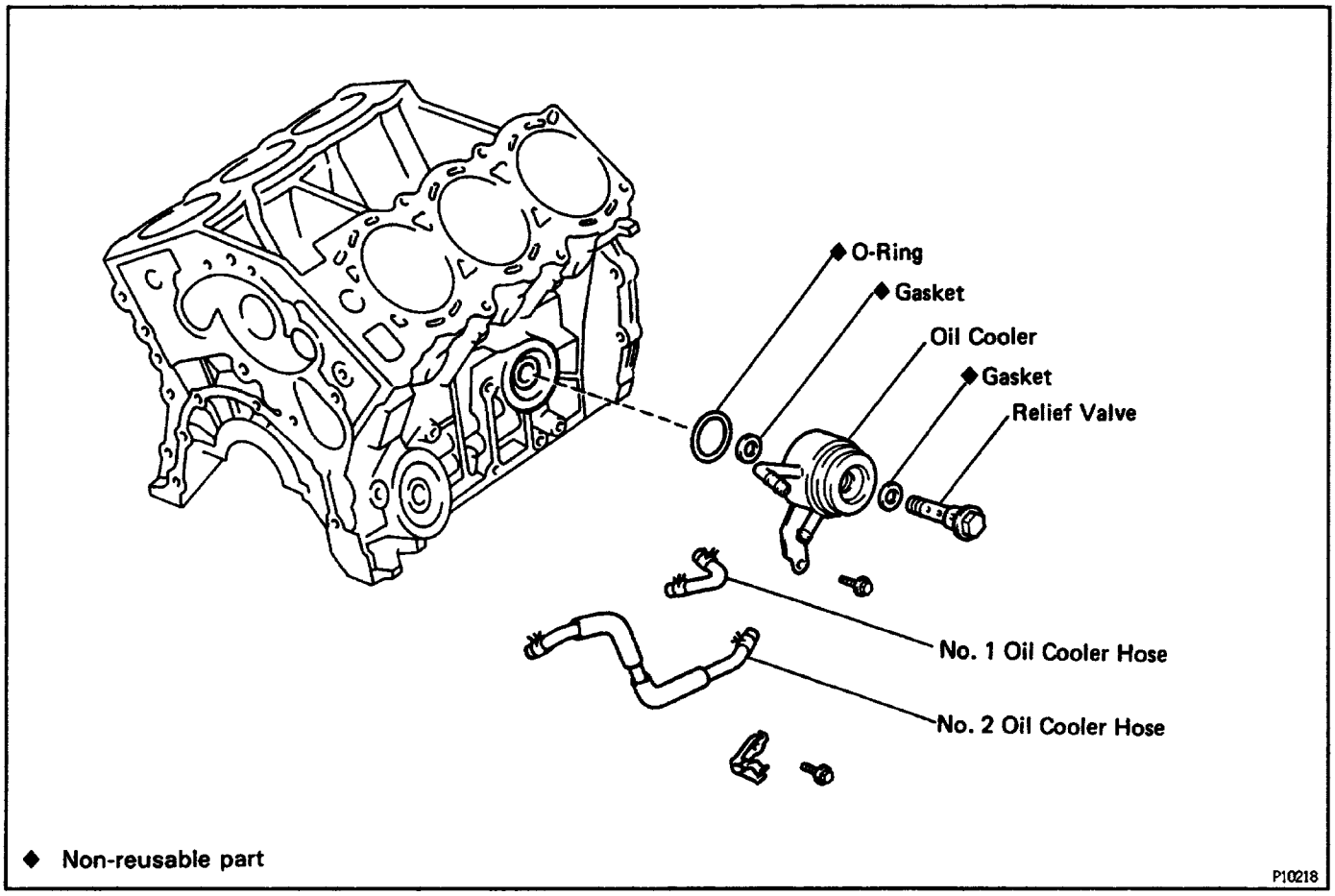

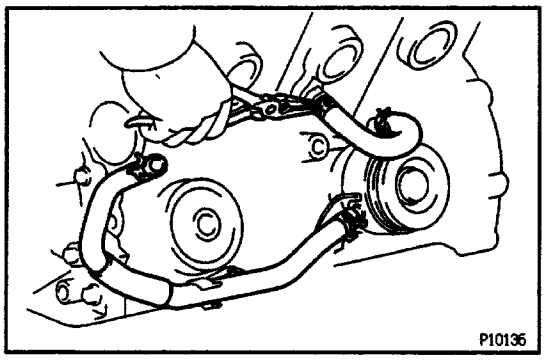

OIL COOLER REMOVAL

1. DRAIN ENGINE COOLANT

2. DISCONNECT OIL COOLER NOSES

Disconnect the No.1 and No.2 oil cooler hoses.

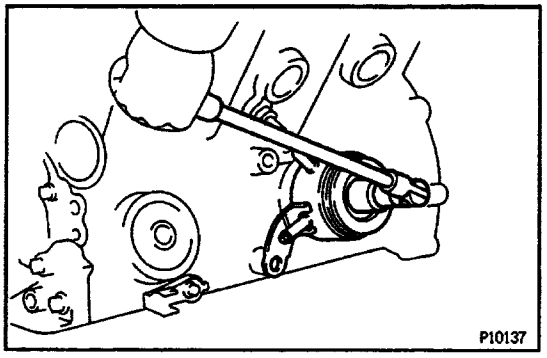

3. REMOVE OIL COOLER

Remove the bolt, relief valve, gaskets and oil cooler.

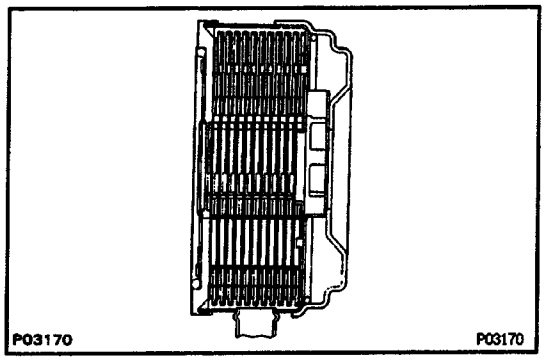

OIL COOLER INSPECTION

INSPECT OIL COOLER

Check the oil cooler for damage or clogging.

If necessary, replace the oil cooler.

OIL COOLER INSTALLATION

(See components for Removal and installation)

1. INSTALL OIL COOLER

(a) Replace the O–ring with a new part.

(b) Install a new gasket to the relief valve.

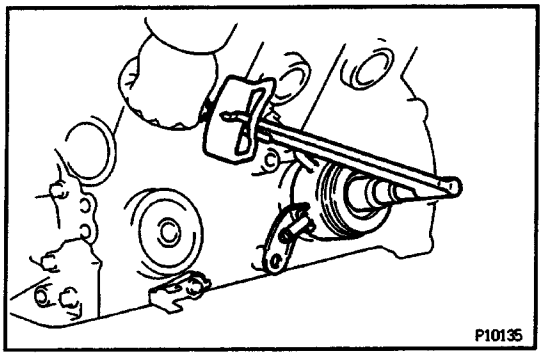

(c) Install the oil cooler with the relief valve and 2 new gaskets.

Torque: 59 N–m (600 kgf–cm, 43 ft–lbf)

(d) Install and torque the bolt.

Torque: 39 N–m (400 kgf–cm, 29 ft–lbf)

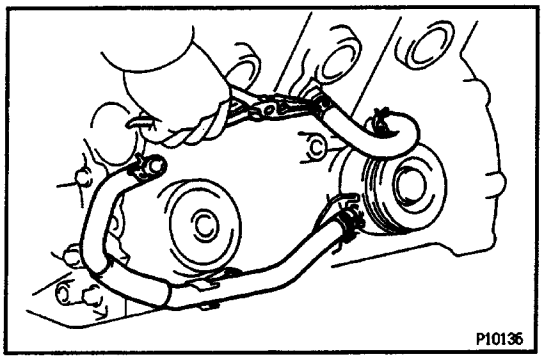

2. CONNECT OIL COOLER HOSES

Connect the No. 1 and No.2 oil cooler hoses.

3. FILL WITH ENGINE COOLANT

4. START ENGINE AND CHECK FOR LEAKS

5. RECHECK ENGINE OIL LEVEL

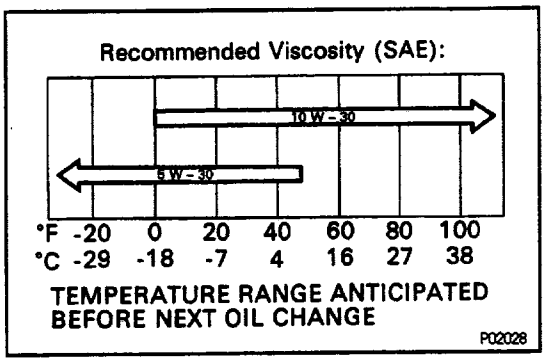

OIL PRESSURE CHECK

1. CHECK OIL QUALITY

Check the oil for deterioration, entry of water, discoloring or thinning.

If oil quality is visibly poor, replace.

Oil grade:

API grade SH, Energy– Conserving II or ILSAC multigrades engine oil. Recommended viscosity is as shown, In the illustration.

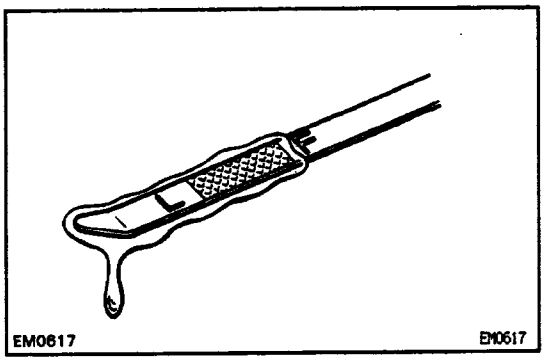

2. CHECK OIL LEVEL

The oil level should be between the ”L” and ”F” marks on the level gauge. If low, check for leakage and add oil up to the ’F’ mark.

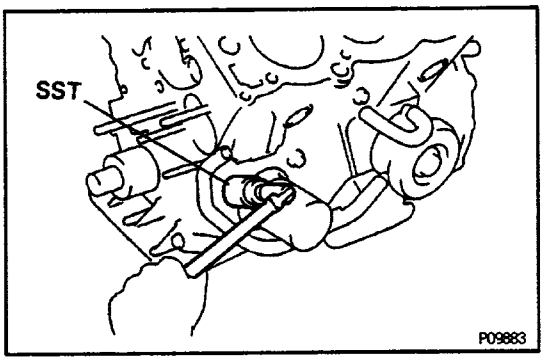

3. REMOVE OIL PRESSURE SENDER GAUGE

Using SST, remove the oil pressure sender gauge.

SST 09816 – 30010

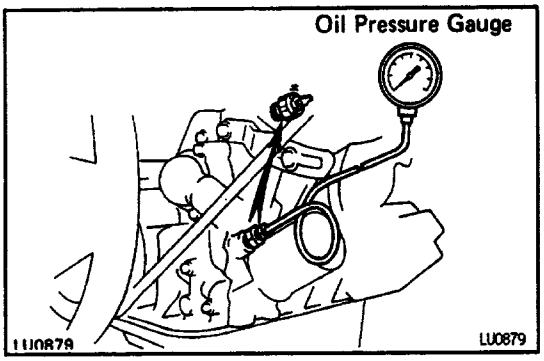

4. INSTALL OIL PRESSURE GAUGE

5. START ENGINE

Start the engine and warm it up to normal operating temperature.

6. MEASURE OIL PRESSURE

Oil pressure:

At idle speed

29 kPa (0.3 kgf/cm2, 4.3 psi) or more

At 3,000 rpm

245 – 520 kPa (2.5 – 5.3 kgf/cm2, 36 – 75 psi)

7. REMOVE OIL PRESSURE GAUGE

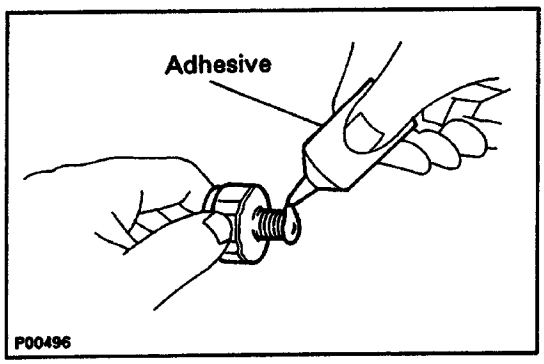

8. INSTALL OIL PRESSURE SENDER GAUGE

(a) Apply adhesive to 2 or 3 threads.

Adhesive:

Part No. 08833–00080, THREE BOND 1344, LOCTITE 242 or equivalent

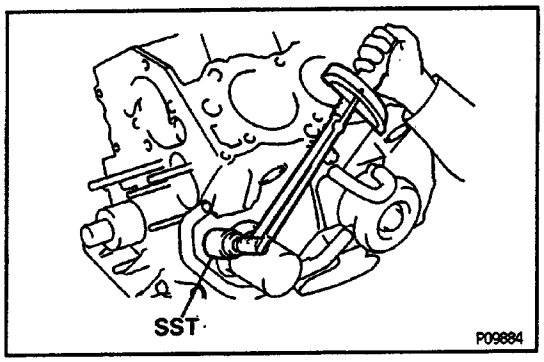

(b) Using SST, install the oil pressure sender gauge.

SST 0981 6 –30010

Torque: 15 N–m (150 kgf–cm. 11 ft–lbf)

9. START ENGINE AND CHECK FOR LEAKS

OIL PUMP

COMPONENTS FOR REMOVAL AND INSTALLATION

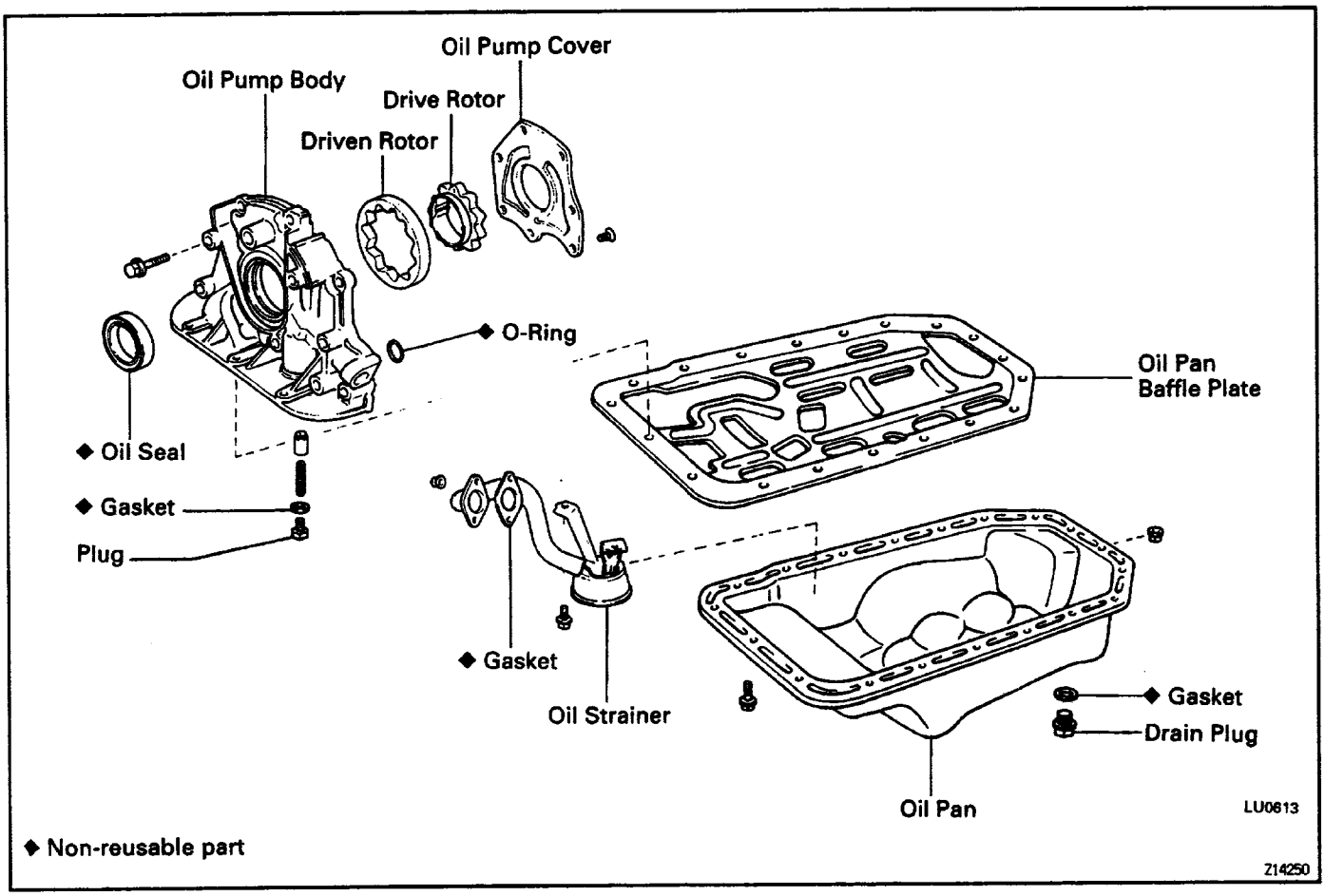

OIL PUMP REMOVAL

1. REMOVE ENGINE UNDER COVER

2. 4WD:

REMOVE FRONT DIFFERENTIAL
(See SA section)

3. DRAIN ENGINE OIL

4. REMOVE TIMING BELT

(See timing belt removal in timing belt in Engine Mechanical)

6. REMOVE CRANKSHAFT TIMING PULLEY

(See step 21 in timing belt removal in timing belt in Engine Mechanical)

6. REMOVE OIL PAN

(a) Remove the 17 bolts and 2 nuts.

(b) Using SST and a brass bar, separate the oil pan from the baffle plate.

SST 09032–00100

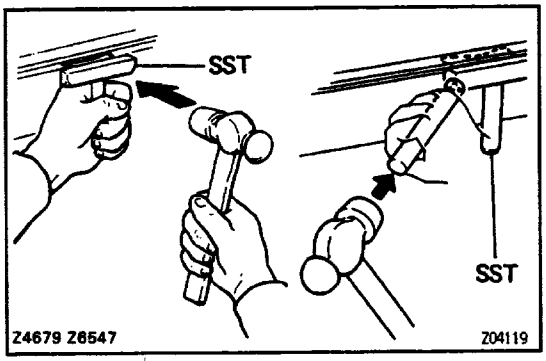

HINT: When removing the oil pan, be careful not to damage the oil pan flange.

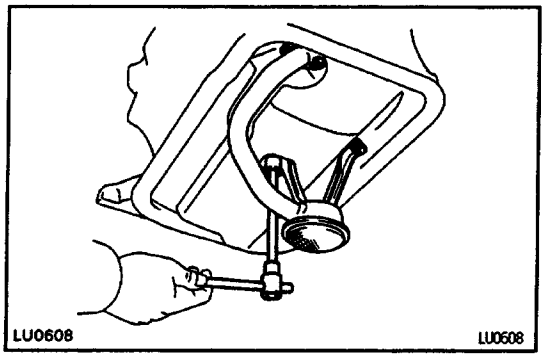

7. REMOVE OIL STRAINER

Remove the 2 bolts, 2 nuts, oil strainer and gasket.

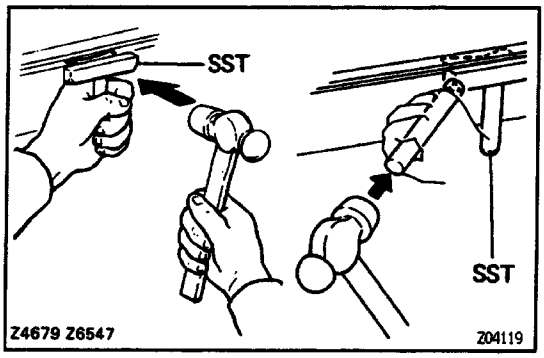

8. REMOVE OIL PAN BAFFLE PLATE

Insert the blade of SST between the cylinder block and baffle plate, cut off applied sealer and remove the baffle plate.

SST 09032 – 00100

HINT: When removing the baffle plate, be careful not to damage the baffle plate flange.

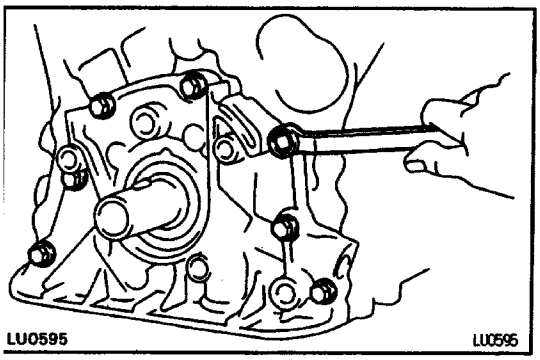

9. REMOVE OIL PUMP

(a) Remove the 7 bolts and oil pump.

(b) Using a plastic–faced hammer, carefully tap the oil pump body.

(c) Remove the O–ring from the cylinder block.

OIL PUMP DISASSEMBLY

(See components for Removal and Installation)

1. REMOVE DRIVEN AND DRIVE ROTORS

(a) Remove the 7 screws and pump body cover.

(b) Remove the drive and driven rotors.

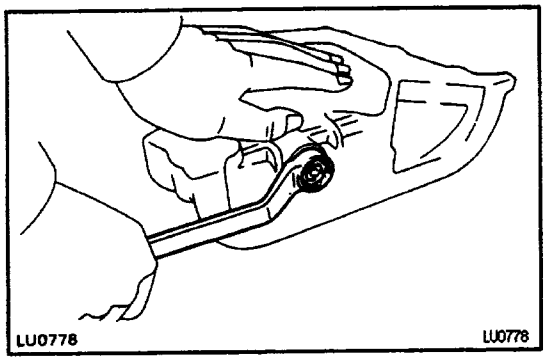

2. REMOVE RELIEF VALVE

(a) Unscrew the relief valve plug and gasket.
(b) Remove the spring and relief valve.

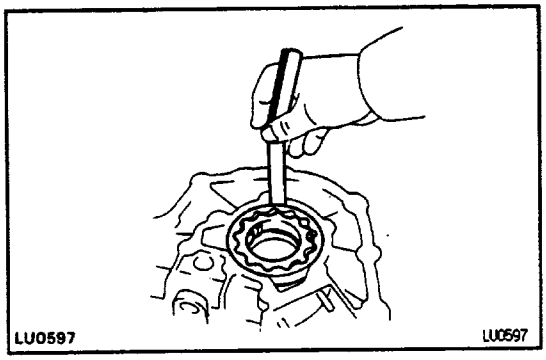

OIL PUMP INSPECTION

1. INSPECT BODY CLEARANCE

Using a thickness gauge, measure the clearance between the driven rotor and pump body.

Standard clearance:

0.10 –0.13 mm (0.0039 – 0.0051 in.)

Maximum clearance:

0.30 mm (0.0118 in.)

If the clearance is greater than maximum, replace the oil pump rotor set and/or pump body.

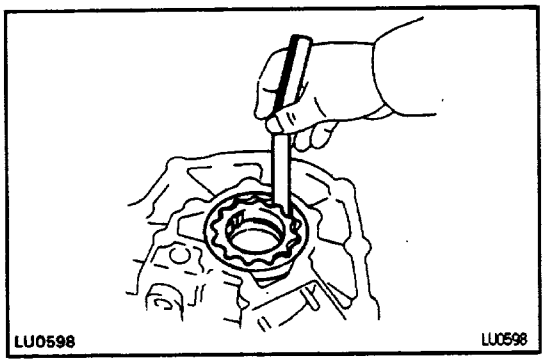

2. INSPECT TIP CLEARANCE

Using a thickness gauge, measure the clearance between the drive and driven rotors.

Standard clearance:

0.11 – 0.24 mm (0.0043 – 0.0094 In.)

Maximum clearance:

0.35 mm (0.0138 in.)

If the clearance is greater than maximum, replace the oil pump rotor set.

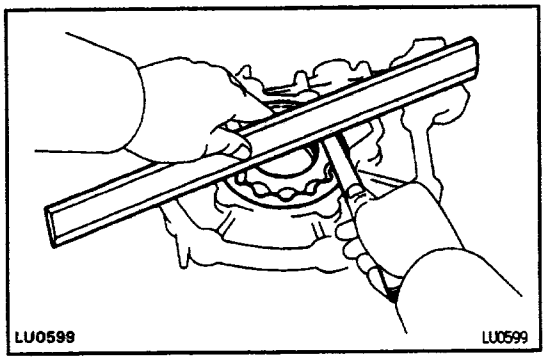

3. INSPECT SIDE CLEARANCE

Using a thickness gauge and precision straight edge measure the side clearance as shown.

Standard clearance:

0.03 – 0.09 mm (0.0012 – 0.0035 in.)

Maximum clearance:

0.15 mm (0.0059 in.)

If the clearance is greater than maximum, replace the oil pump rotor set and/or pump body.

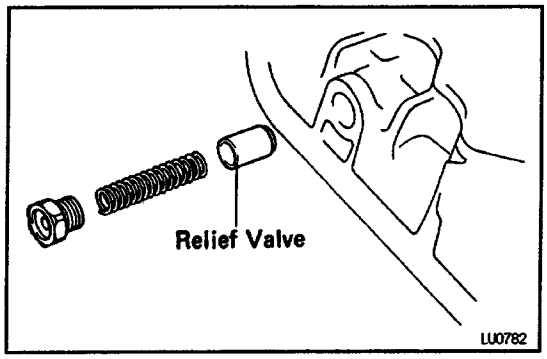

4. INSPECT RELIEF VALVE

Coat the relief valve with engine oil and check –that it falls smoothly into the valve hole by its own weight.
If the valve does not fall smoothly, replace the valve and/or oil pump assembly.

CRANKSHAFT FRONT OIL SEAL REPLACEMENT

HINT: There are 2 methods (A and B) to replace the oil seal which are as follows:

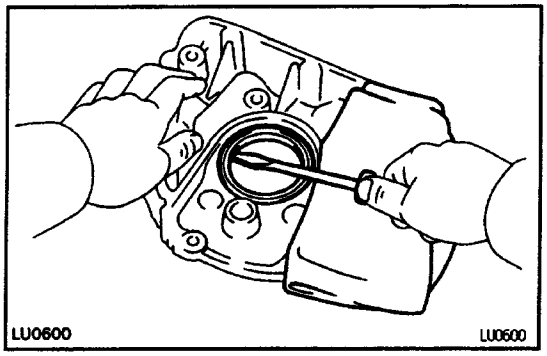

REPLACE CRANKSHAFT FRONT OIL SEAL

A. If oil pump is removed from cylinder block:

(a) Using a screwdriver, pry out the oil seal.

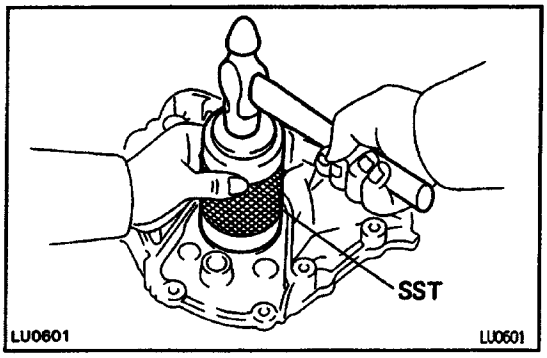

(b) Using SST and a hammer, tap in a new oil seal until its surface is flush with the oil pump body edge.
SST 09309–37010

(c) Apply MP grease to the oil seal lip.

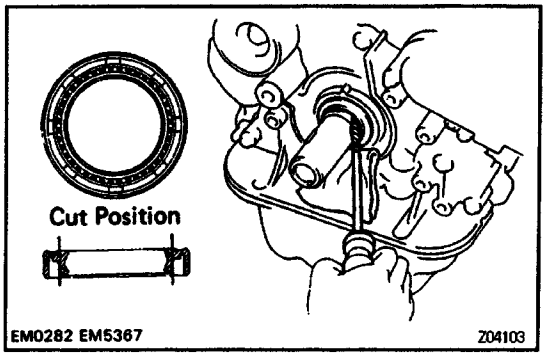

B. If oil pump is installed to the cylinder block:

(a) Using a knife, cut oft the oil seal lip.

(b) Using a screwdriver, pry out the oil seal.

NOTICE: Be careful not to damage the crankshaft. Tape the screwdriver tip.

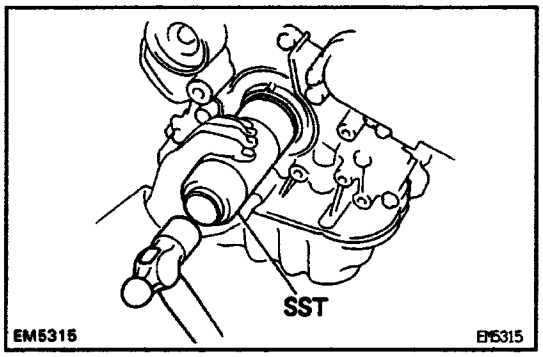

(c) Apply MP grease to a new oil seal lip.
(d) Using SST and a hammer, tap in the oil seal until its surface is flush with the oil pump body edge.
SST 09306–37010

111C11–1R

OIL PUMP ASSEMBLY

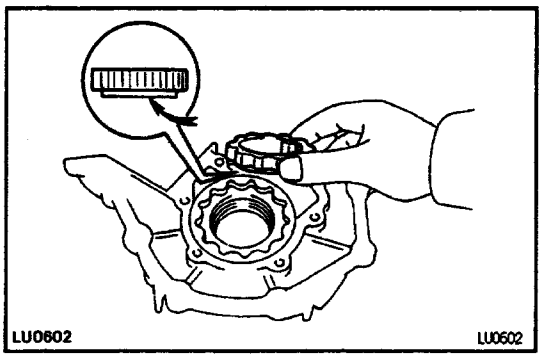

(See components for Removal and Installation)

1. INSTALL DRIVE AND DRIVEN ROTORS

Put the drive and driven rotors in the pump body.

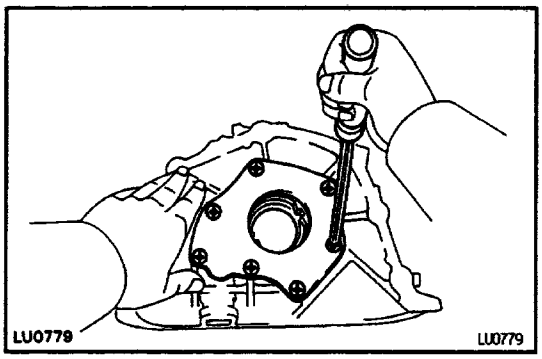

2. INSTALL PUMP BODY COVER

Install the pump body cover with the 7 screws.
Torque: 10 N–m (105 kgf–cm, 8 ft–lbf)

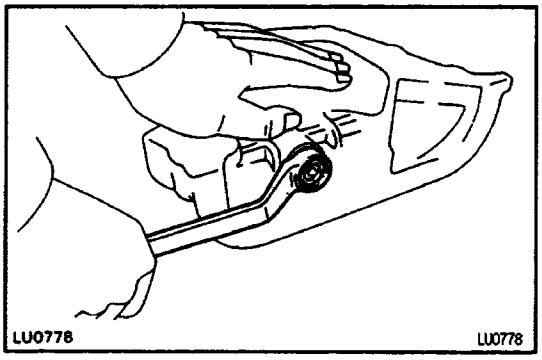

3. INSTALL RELIEF VALVE

Install relief valve and the spring in the body, and screw on the relief valve plug with a new gasket.
Torque: 37 N–m (375 kgf–cm, 37 ft–lbf)

OIL PUMP INSTALLATION

(See components for Removal and Installation)

1. INSTALL OIL PUMP

(a) Remove any old packing (FIPG) material and be careful not to drop any oil on the contact surfaces of the oil pump and cylinder block.

- Using a razor blade and gasket scraper, remove all the old packing (FIPG) material from the gasket surfaces and sealing grooves.
- Thoroughly clean all components to remove all the loose material.
- Using a non–residue solvent, clean both sealing surfaces.

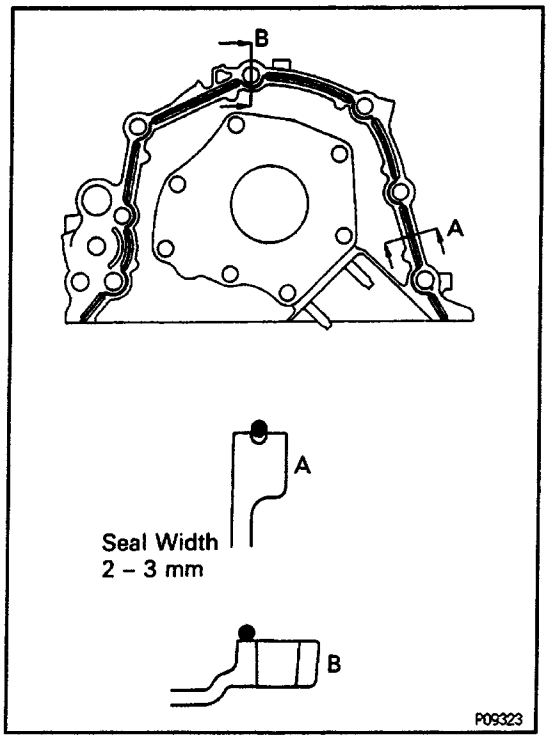

(b) Apply seal packing to the oil pump as shown in the illustration.

Seal pecking:

Part No. 08826–00080 or equivalent

- Install nozzle that has been cut out to a 2 – 3 mm(0.08–0.12 in.) opening.

HINT: Avoid applying an excessive amount to the surface.

- Parts must be assembled within 5 minutes of application. Otherwise the material must be removed and reapplied.
- Immediately remove nozzle from the tube and reinstall cap.

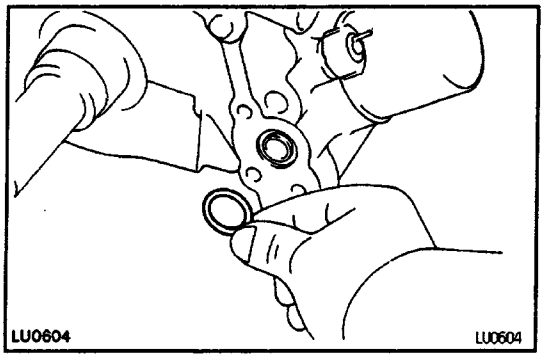

(c) Place a new O–ring into the groove of cylinder block.

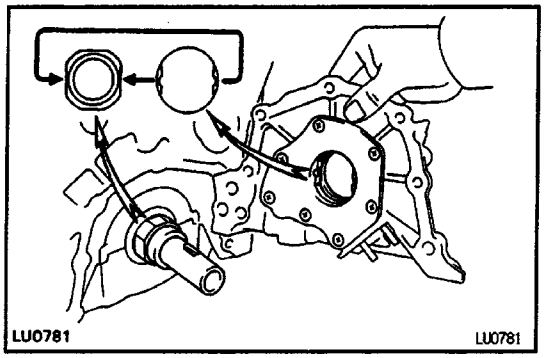

(d) Install the oil pump to the crankshaft with the spline teeth of the drive rotor engaged with the large teeth of the crankshaft.

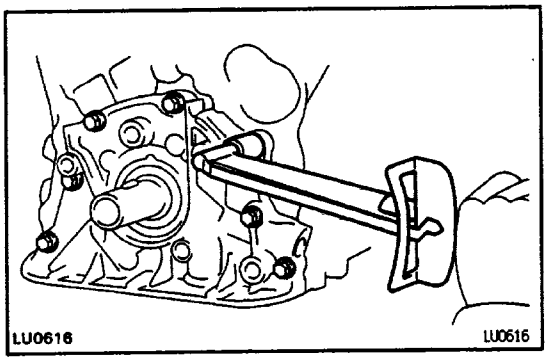

(e) Install the oil pump with the 7 bolts.

Torque: 20 N–m (200 kgf–cm, 14 ft–lbf)

2. CLEAN OIL PAN BAFFLE PLATE AND OIL PAN

Remove any old packing (FIPG) material and be careful not to drop any oil on the contacting surfaces of the oil pan baffle plate, oil pan, cylinder block and sealing grooves.

- Using a razor blade and gasket scraper, remove all the remaining seal packing (FIPG) material from the gasket surfaces.
- Thoroughly clean all components to remove all the loose material.
  Clean both sealing surfaces with a non–residue solvent.

NOTICE: Do not use a solvent which will affect the painted surfaces.

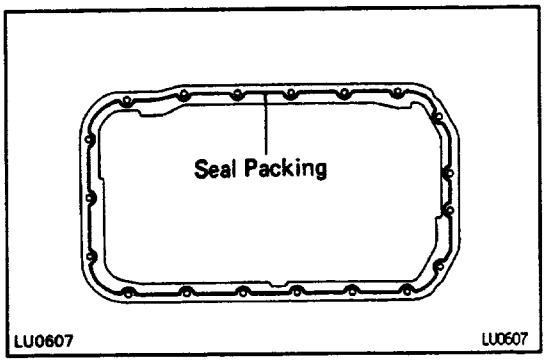

3. INSTALL OIL PAN BAFFLE PLATE

Apply seal packing to the baffle plate as shown in the illustration.

Seal packing:

Part No. 08826–00080 or equivalent

- Install a nozzle that has been cut to a 3 – 4 mm (0.12 – 0.16 in.) opening.

HINT: Avoid applying an excess amount to the surface.

- If parts are not assembled within 5 minutes o1 applying the seal packing, the effectiveness o1 the seal packing is lost and the seal packing must be removed and reapplied.
- Immediately remove the nozzle from the tube an(reinstall the cap after using the seal packing.

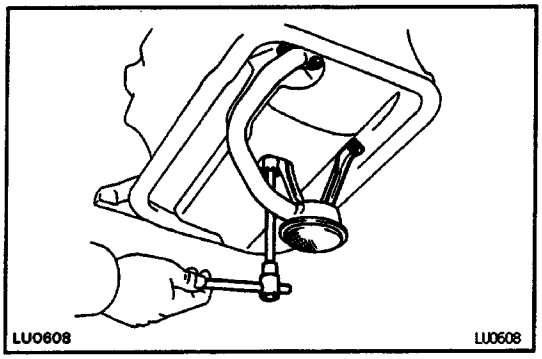

4. INSTALL OIL STRAINER

Place a new gasket and install the oil strainer with the 2 nuts and 2 bolts.

Torque: 6.9 N–m (70 kgf–cm, 61 in.–lbf)

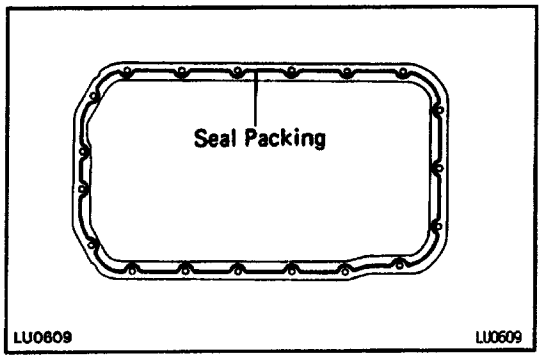

5. INSTALL OIL PAN

(a) Apply seal packing to the oil pan as shown in the illustration.

Seal packing:

Part No. 08826–00080 or equivalent

Install a nozzle that has been cut to a 3 – 4 mm (0.12 – 0.16 in.) opening.

HINT: Avoid applying an excess amount to the surface.

- If parts are not assembled within 5 minutes of applying the seal packing, the effectiveness of the seal packing is lost and the seal packing must be removed and reapplied.
- Immediately remove the nozzle from the tube and reinstall the cap after using the seal packing.

(b) Install the oil pan with the 2 nuts and 17 bolts.

Torque: 5.9 N–m (60 kgf–cm. 52in.–lbf)

6. INSTALL TIMING BELT

(See timing belt installation in timing belt in Engine Mechanical)

7. INSTALL CRANKSHAFT TIMING PULLEY

(See step 6 in timing belt installation in timing belt in Engine Mechanical)

8. 4WD:

INSTALL FRONT DIFFERENTIAL

(See SA section)

9. ENGINE UNDER COVER

10. FILL WITH ENGINE OIL

11. START ENGINE AND CHECK FOR LEAKS

12. RECHECK ENGINE OIL LEVEL

LUBRICATION SYSTEM

DESCRIPTION

A fully pressurized, fully filtered lubrication system is used in this engine.

OPERATION

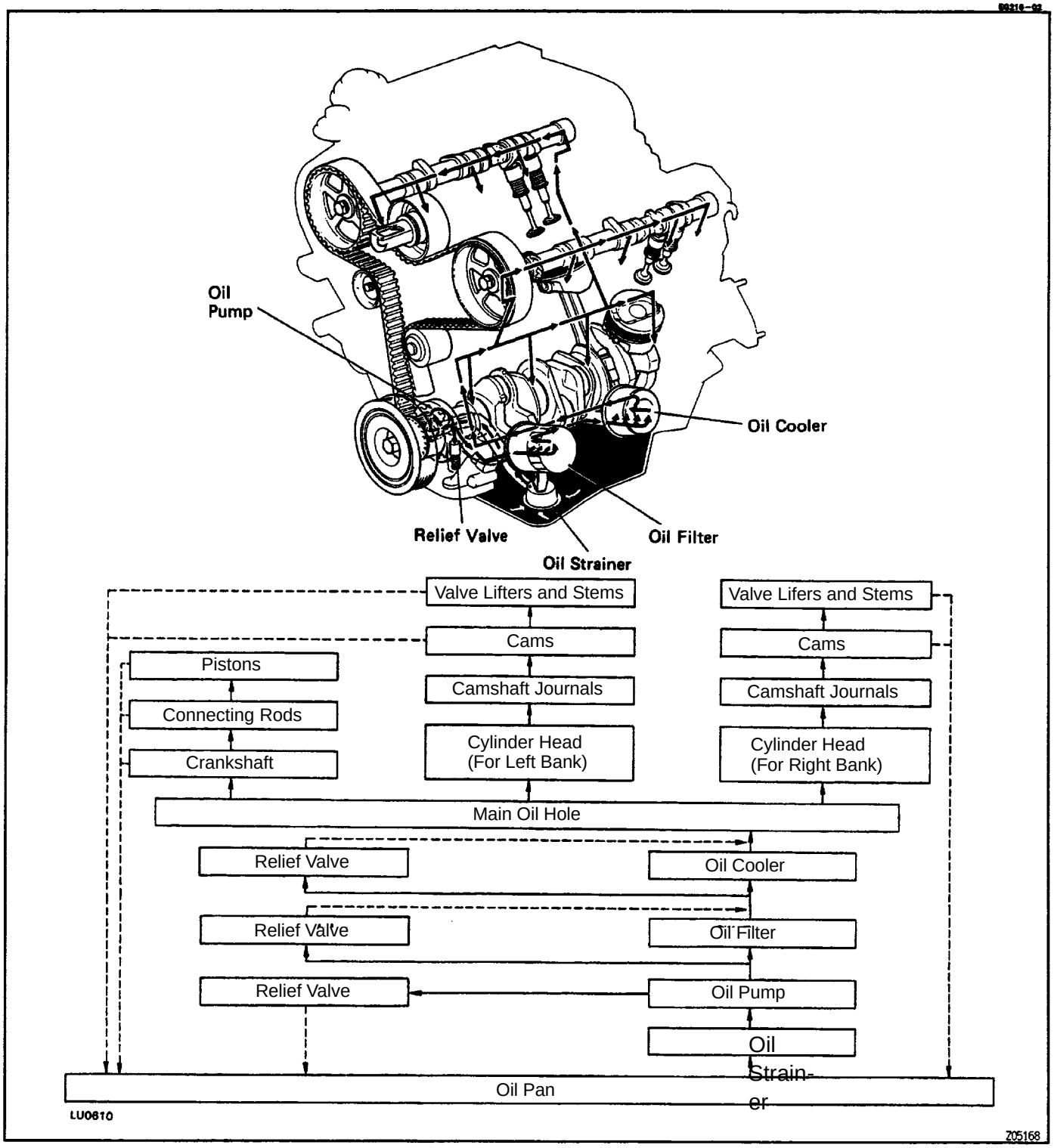

A pressure feeding lubrication system has been adopted to supply oil to the moving parts of this engine. The lubrication system consists of an oil pan, oil pump, oil filter and other external parts which supply oil to the moving parts in the engine block. The oil circuit is shown in the illustration at the top of the previous page. Oil from the oil pan is pumped up by the oil pump. After it passes through the oil filter, it is fed through the various oil holes in the crankshaft, cylinder block and cylinder head. After passing through the cylinder block and performing its lubricating function, the oil is returned by gravity to the oil pan. A dipstick on the side of the oil pump body is provided to check the oil level.

OIL PUMP

The oil pump pumps up oil from the oil pan and sends it under pressure to the various parts of the engine. An oil strainer is mounted in the front of the inlet to the oil pump to remove impurities.
The oil pump itself is a trochoid type pump, inside of which is a drive rotor and a driven rotor. When the crankshaft causes the drive rotor to rotate, the driven rotor rotates in the same direction, and since the axis of the drive rotor shaft is different from the center of the driven rotor, the space between the two rotors changes as they rotate. Oil is drawn in when the space widens, and is discharged when the space becomes narrow.

OIL PRESSURE REGULATOR (RELIEF VALVE)

At high engine speeds, the oil pump supplies more oil to each part than it is necessary. For this reason, an oil pressure regulator which works to prevent an oversupply of oil is installed on the oil pump. During normal oil supply, a coil spring and valve keep the bypass closed, but when too much oil is being supplied, the pressures become extremely high, overpowering the force of the spring and opening the valve. This allows the excess oil to flow through the relief valve and return to the oil pan. ,

OIL FILTER

The oil filter is a full flow type filter with a paper filter element and built–in relief valve. Particles of metal from wear, airborne dirt, carbon and other impurities can get in the oil during use and could cause accelerated wear or seizing if allowed to circulate through the engine. The oil filter, integrated into the oil line, removes these impurities as the oil passes through it.
The filter is mounted outside the engine to simplify replacement of the filter element.
A relief valve is included in front of the filter element to relieve the high oil pressure in case the filter element becomes clogged with impurities. The bypass valve opens when the difference in the oil pressure of the inlet and outlet ports exceeds a specified value. Oil passing through the relief valve bypasses the oil filter and flows directly into the main oil hole in the engine.

PREPARATION

SST (SPECIAL SERVICE TOOLS)

	**09032–00100** Oil Pan Seal Cutter	
	**09228–07500** Oil Filter Wrench	
	**09309–37010** Transmission Bearing Rsplacer	Camshaft front oil seat
	**09816–30010** Oil Pressure Switch Socket	

RECOMMENDED TOOLS

	**09200–00010** Engine Adjust Kit.	

EQUIPMENT

Oil pressure gauge	
Precision straight edge	Oil pump
Torque wrench	

LUBRICANT

Item	Capacity	Classification
Engine oil Dry fill Drain and refill w/o Oil filter change w/ Oil filter change	**5.4 liters (5.7 US qts, 4.8 Imp. qts)** **4.2 liters (4.4 US qts, 3.7 Imp. qts)** **4.5 liters (4.8 US qts, 4.0 Imp. qts)**	API grade SH, Energy–Conserving II or ILSAC multigrade and recommended viscosity oil.

SSM (SPECIAL SERVICE MATERIALS)

08826–00080	Seal Packing Black or equivalent (FIPG)	Oil pump, Oil pan baffle plate, Oil pan
08833–00080	Adhesive 1344, THREE BOND 1344, LOCTITE 242 or equivalent	Oil pressure sender gauge

SERVICE SPECIFICATIONS

SERVICE DATA

Oil pressure	At idle speed (normal operating temperature)		29 kPa (0.3 kgf/cm², 4.3 psi) or more
	At 3,000 rpm (normal operating temperature)		245 – 520 kPa (2.5 – 5.3 kgf/cm², 36 – 75 psi)
Oil pump	Body clearance	STD	0.10 – 0.13 mm (0.0039 – 0.0051 in.)
		Maximum	0.30 mm (0.0118 in.)
	Tip clearance	STD	0.11 – 0.24 mm (0.0043 – 0.0094 in.)
		Maximum	0.35 mm (0.0138 in.)
	Side clearance	STD	0.03 – 0.09 mm (0.0012 – 0.0035 in.)
		Maximum	0.15 mm (0.0059 in.)

TORQUE SPECIFICATIONS

Part tightened	N·m	kgf·cm	ft·lbf
Oil pressure sender gauge x Cylinder block	15	150	11
Oil pump x Oil pump body cover	10	105	8
Oil pump x Cylinder block	20	200	14
Oil pump x Relief valve	37	375	27
Oil strainer x Cylinder block	6.9	70	61 in.·lbf
Oil pan x Cylinder block	5.9	60	52 in.·lbf
Oil cooler x Relief valve	59	600	43
Oil cooler x Cylinder block	39	400	29

CIRCUIT OPENING RELAY

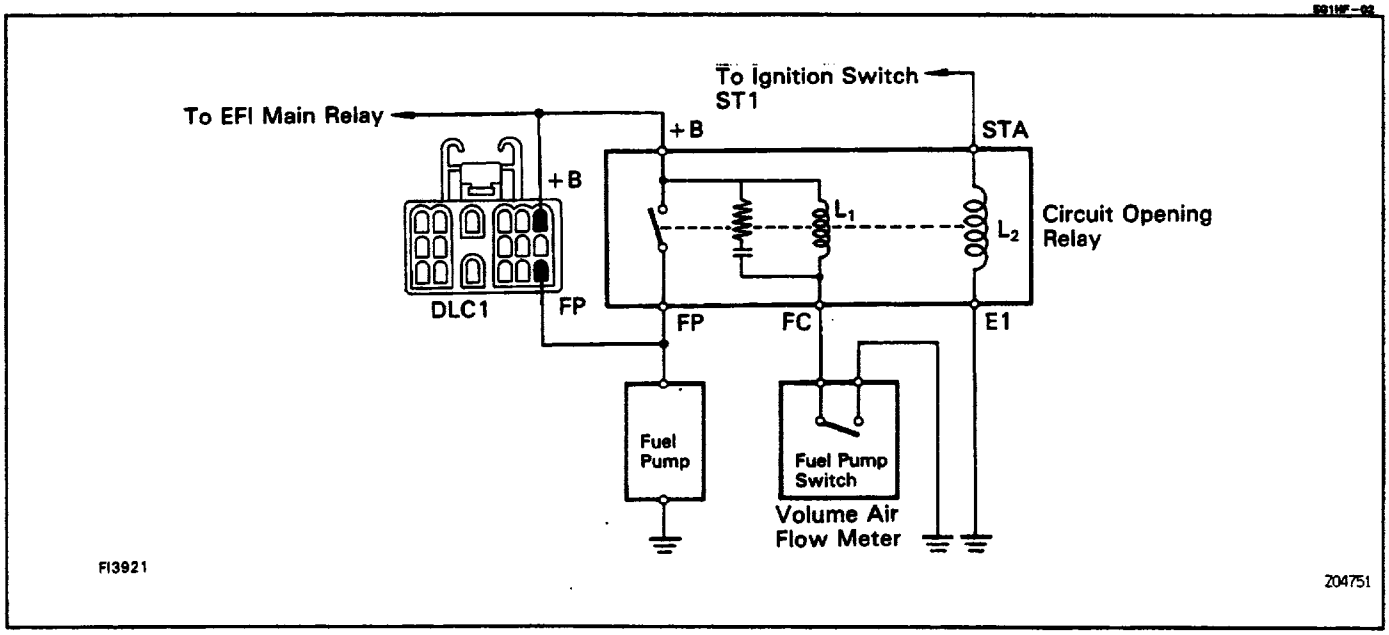

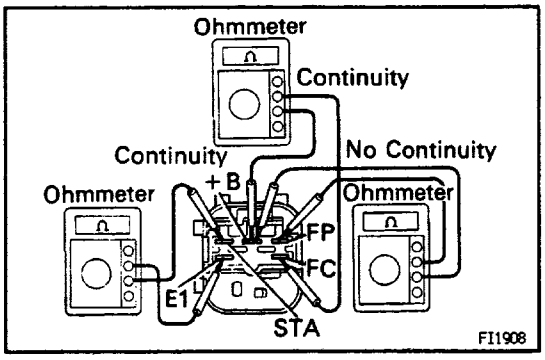

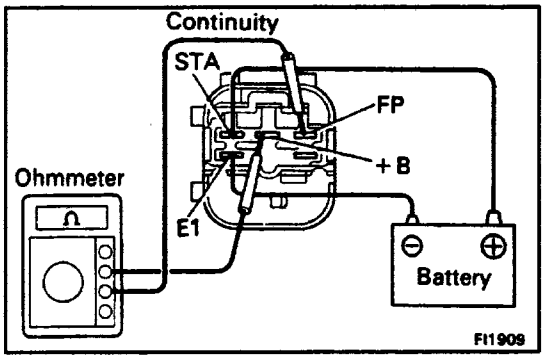

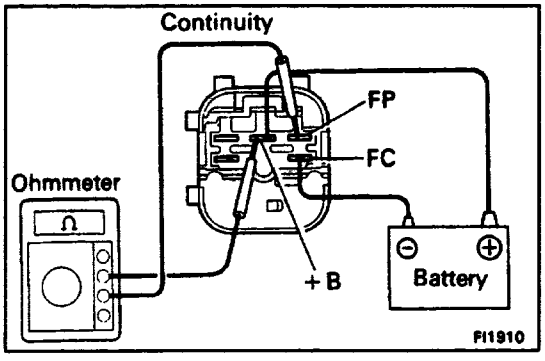

CIRCUIT OPENING RELAY INSPECTION

1. INSPECT RELAY CONTINUITY

(a) Using an ohmmeter, check that there is continuity between terminals STA and E1.

(b) Check that there is continuity between terminals +B and FC.

(c) Check that there is no continuity between terminals +B and FP.

If continuity is not as specified, replace the relay.

2. INSPECT RELAY OPERATION

(a) Apply battery voltage across terminals STA and E1.

(b) Using an ohmmeter, check that there is continuity between terminals +B and FP.

(c) Apply battery voltage across terminals +13 and FC.

(d) Check that there is continuity between terminals +B and FP.

If operation is not as specified, replace the relay.

COLD START INJECTOR TIME SWITCH

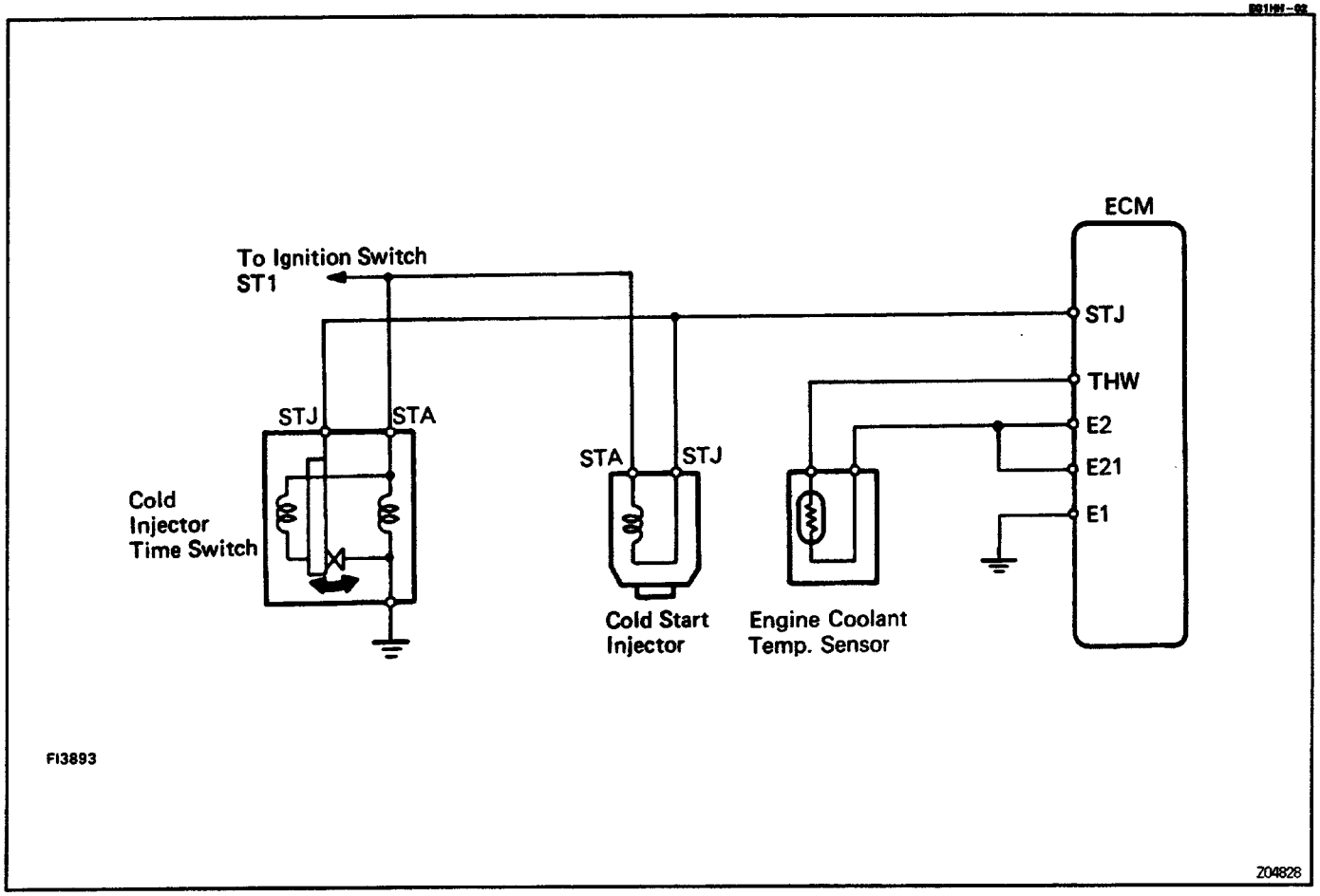

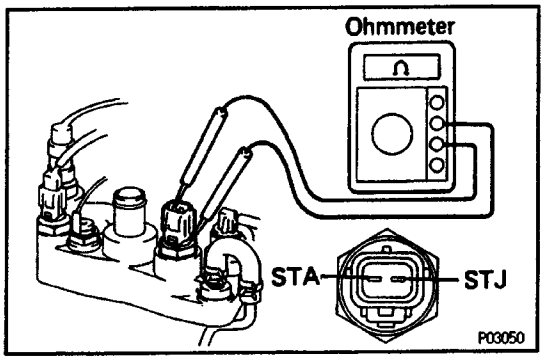

COLD START INJECTOR TIME SWITCH INSPECTION

MEASURE RESISTANCE OF COLD START INJECTOR TIME SWITCH

(a) Disconnect the connector.

(b) Using an ohmmeter, measure the resistance between terminals.

Between terminals	Resistance (Ω)	Engine coolant temperature
STA – STJ	**30 – 50**	**Below 10°C (50°F)**
STA – STJ	**70 – 90**	**Above 25°C (77°F)**
STA – Ground	**30 – 90**	**–**

If the resistance is not as specified, replace the switch.

(c) Reconnect the connector.

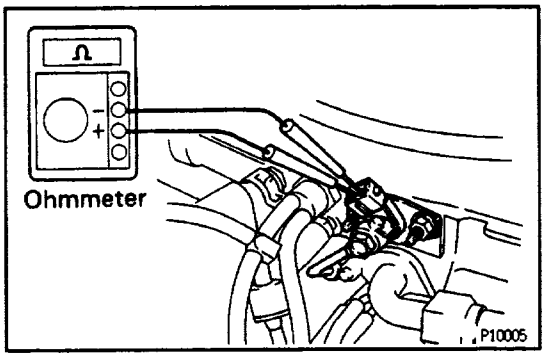

COLD START INJECTOR

ON–VEHICLE INSPECTION

INSPECT RESISTANCE OF COLD START INJECTOR

(a) Disconnect the cold start injector connector.

(b) Using an ohmmeter, check the resistance of the injector.

Resistance:

2–4Ω

If the resistance is not as specified, replace the cold start injector.

(c) Connect the cold start injector connector.

COMPONENTS FOR REMOVAL AND INSTALLATION

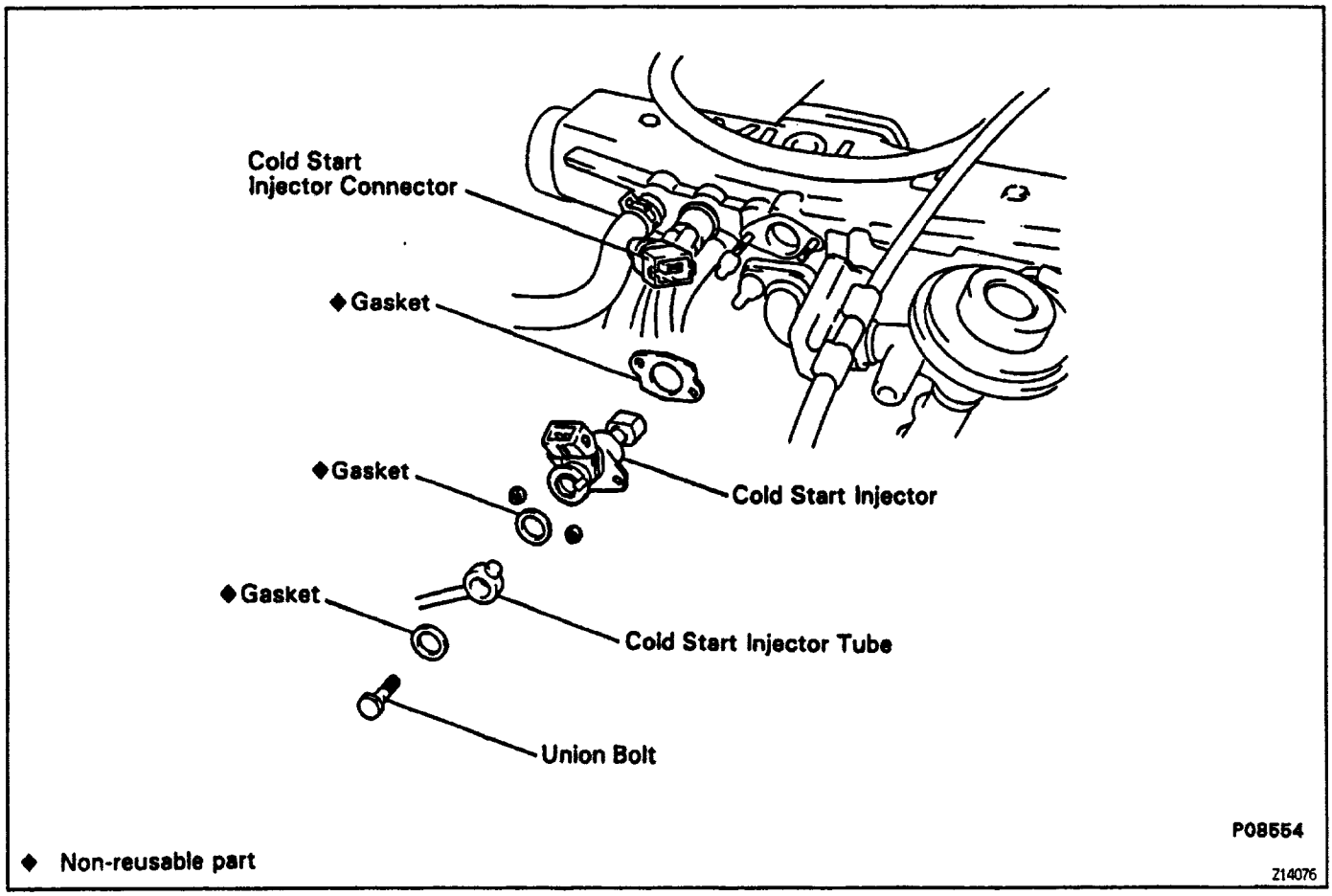

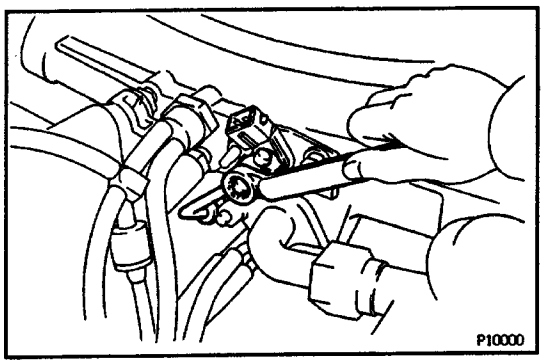

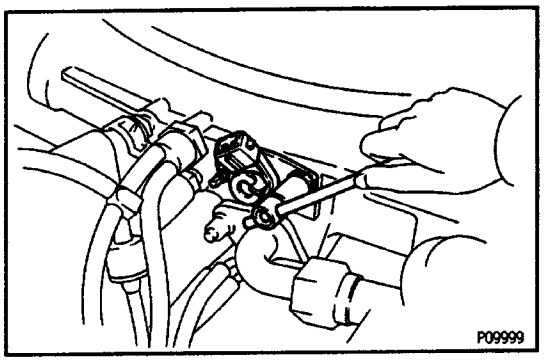

COLD START INJECTOR REMOVAL

(See Components for Removal and Installation)

1. DISCONNECT COLD START INJECTOR CONNECTOR

2. REMOVE COLD START INJECTOR

(a) Put a suitable container or shop towel under the cold start injector tube.

(b) Remove the union bolt and 2 gaskets, and disconnect the cold start injector tube.

HINT: Slowly loosen the union bolt.

(c) Remove the 2 nuts and cold start injector with the gasket.

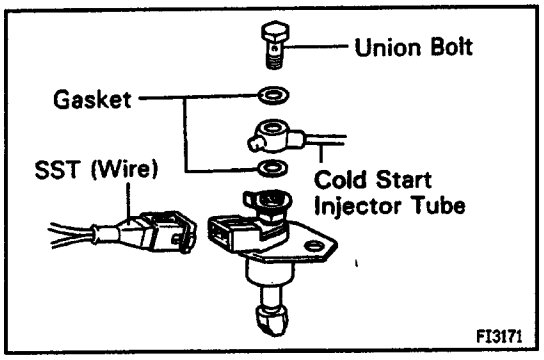

COLD START INJECTOR INSPECTION

1. CHECK INJECTION OF COLD START INJECTOR

(a) Install cold start injector tube, 2 gaskets and union bolt to the injector.

Torque: 15 N–m (150 kgf–cm, 11 ft–lbf)

(b) Connect the SST (wire) to the injector.

SST 09842–30050

CAUTION: Position the injector a: far away from the battery as possible.

(c) Put a container under the injector.

(d) Turn the ignition switch ON.

HINT: Do not start the engine.

(e) Using SST, connect terminals FP and +B of the DLC1.

SST 09843–18020

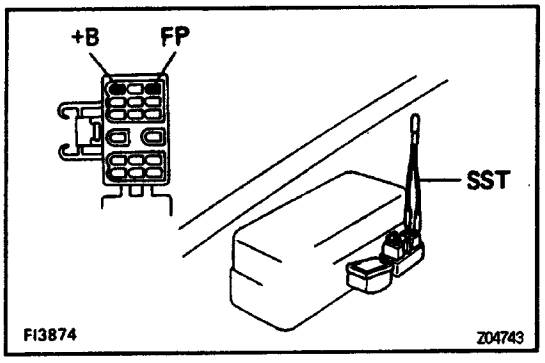

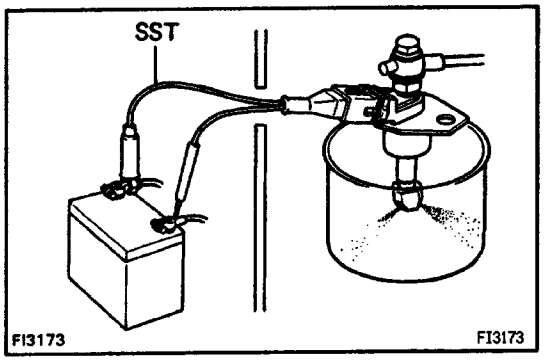

(f) Connect the test probes of the SST to the battery and check that the fuel injection is as shown.

SST 08842 – 30050

NOTICE: Do this check within the shortest possible time.

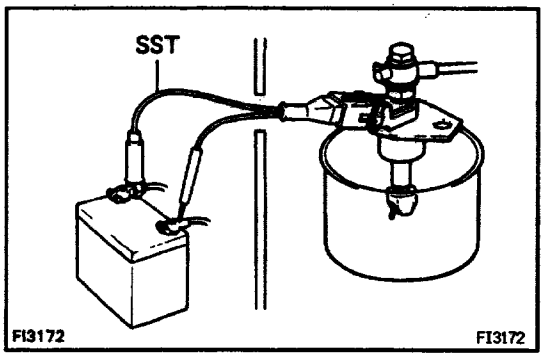

2. INSPECT LEAKAGE

(a) Disconnect the test probes of SST from the battery and check fuel leakage from the injector.
SST 09842–30050
Fuel drop:
One drop or less per minute

(b) After checking, remove SST and restore these parts to their original positions.
- DLC1
- ignition switch OFF
- Cold start injector
- Injector connector

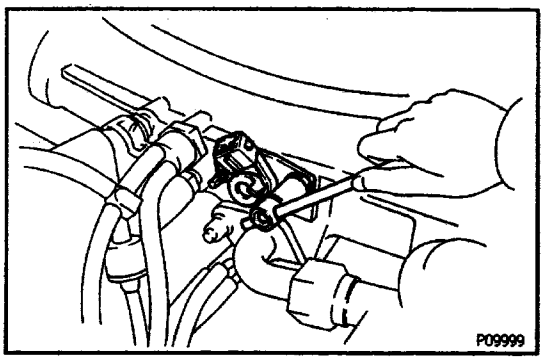

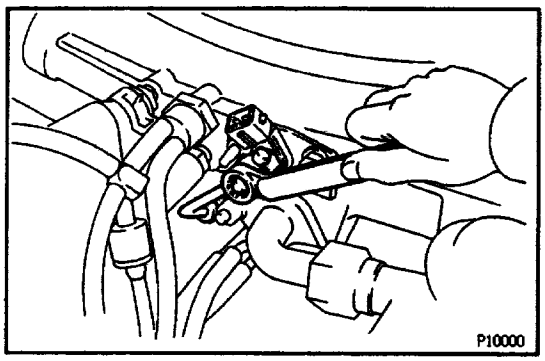

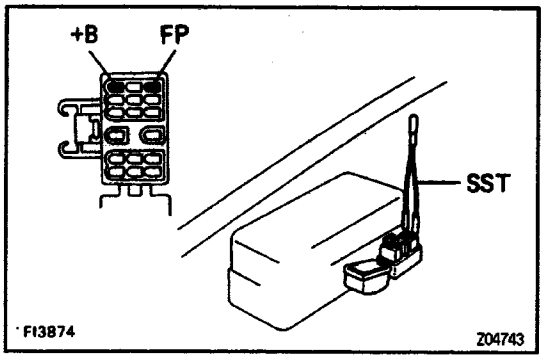

COLD START INJECTOR INSTALLATION

(See Components for Removal and Installation)

1. INSTALL COLD START INJECTOR

(a) Apply sealant to 2 or 3 threads of the bolt end.
Sealant:
Part No. 08833–00070. THREE BOND 1324 or equivalent
HINT: This adhesive wilt not harden while exposed to air. It will act as a sealant or binding agent only when applied to threads, etc., where air is cut oft.

(b) Place a new gasket and install the cold start injector with the 2 nuts.
Torque: 7.8 N–m(80 kgf–cm, 69 in.–lbf)

2. INSTALL COLD START INJECTOR TUBE

Using 2 new gaskets, connect the cold start injector tube with the union bolts.
Torque: 15 N–m (150 kgf–cm. 11 ft–lbf)

3. CONNECT COLD START INJECTOR CONNECTOR

4. CHECK FOR FUEL LEAKAGE

(a) With the ignition switch ON, use SST to connect terminals FP and +B of the DLC1.
SST 09843–18020

(b) Check for fuel leakage.

(c) Remove SST from the DLC1.

MFI SYSTEM

DESCRIPTION

SYSTEM CIRCUIT

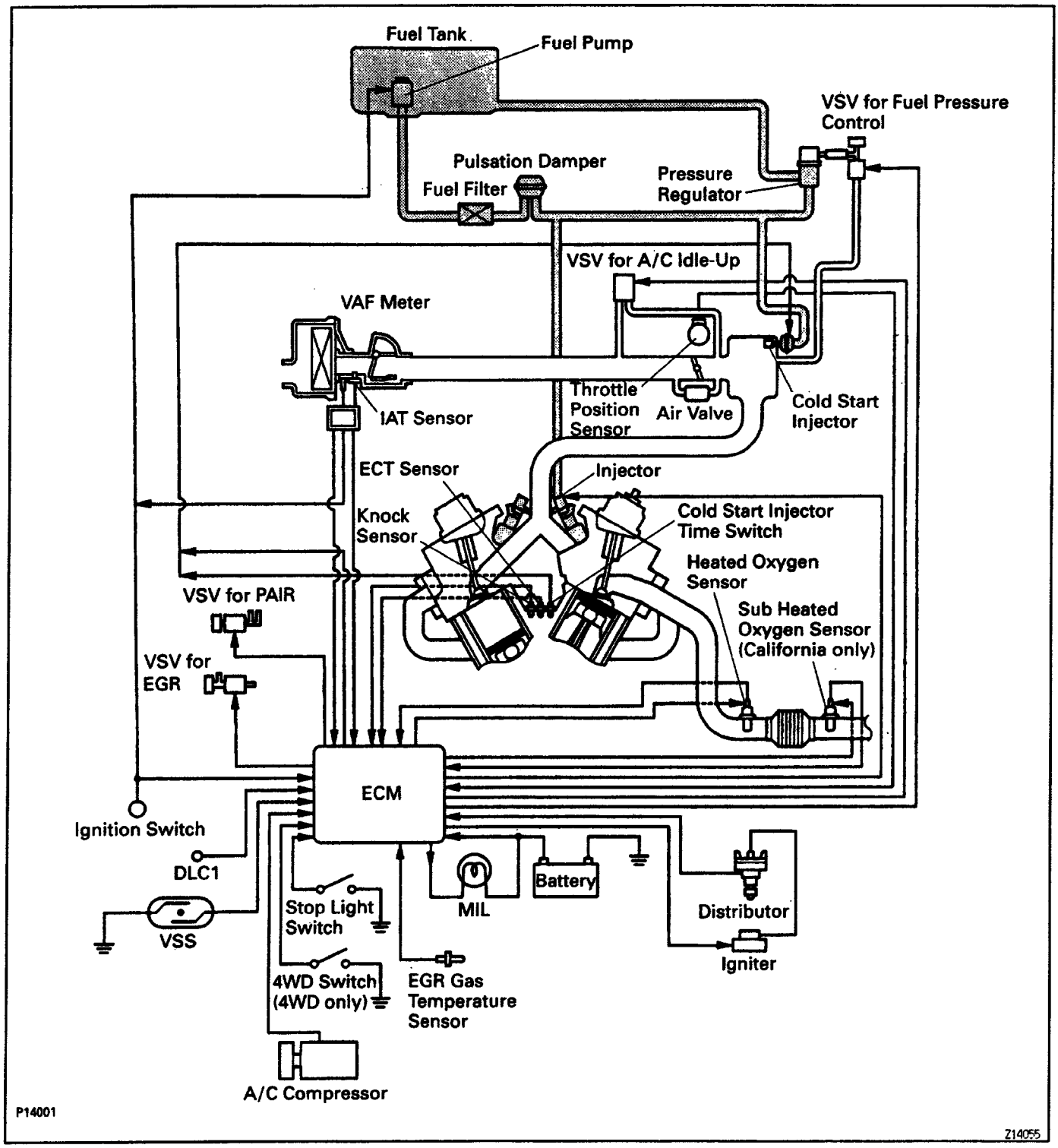

The MFI system is composed of three basic systems: Fuel, Air Induction and Electronic Control Systems.

FUEL SYSTEM

An electric fuel pump supplies sufficient fuel, under a constant pressure, to the MFI injectors.
In accordance with signals from the ECM, these injectors inject the most appropriate quantity of fuel for the engine condition into the intake manifold.

AIR INDUCTION SYSTEM

The air induction system provides just the right amount of air for the engine operating condition.

ELECTRONIC CONTROL SYSTEM

The 3VZ–E engine is equipped with a Toyota Computer Controlled System (TCCS) which centrally controls the MR, ESA, Diagnosis system, etc. by means of an Engine Control Module (ECM, formerly the MFI computer) employing a microcomputer. By means of the ECM, the TCCS controls the following functions:

1. Multiport Fuel Injection (MFI)

The ECM receives signals from various sensors indicating changing engine operating conditions such as:
Intake air volume
Intake air temperature
Engine coolant temperature
Engine speed
Acceleration/deceleration
Exhaust oxygen content etc.
These signals are utilized by the ECM to determine the injection duration necessary for an optimum air–fuel ratio.

2. Electronic Spark Advance (ESA)

The ECM is programmed with data for optimum ignition timing under all operating conditions.
Using data provided by sensors which monitor various engine functions (RPM, intake air volume, engine coolant temperature, etc.), the microcomputer (ECM) triggers the spark at precisely the right instant.

3. Diagnosis Function

When the ECM detects malfunction or abnormalities in the sensor network, it lights the malfunction indicator lamp in the combination meter. At the same time, the trouble is identified and a diagnostic trouble code is recorded by the ECM. The diagnostic trouble code can be read by the number of blinks of the malfunction indicator lamp when terminals TE1 and E1 are connected.
The diagnostic trouble codes are explained on pages EG2–176 and 177.

4. Fail–Safe Function

In the event of a sensor malfunction, a backup circuit will take over to provide minimal driveability, and the malfunction indicator lamp will light up.

DIAGNOSIS SYSTEM

DESCRIPTION

The ECM contains a built–in self diagnosis system by which troubles with the engine signal network are detected and a Malfunction Indicator Lamp on the combination meter lights up.

By analyzing various signals as shown in a later table (See pages EG2–175 and 176) the ECM detects system malfunctions relating to the actuator sensors. The self –diagnosis system has 2 modes, a normal mode and a test mode.

If a malfunction is detected when in the normal mode, the ECM lights up the Malfunction Indicator Lamp to inform the driver of the occurrence of a malfunction. (For some codes the light does not come on.) The light goes off automatically when the malfunction has been repaired. But the diagnostic trouble code(s) remains stored in the ECM memory (except for code Nos. 43, 51 and 53). The ECM stores the code(s) until it is cleared by removing the EFI fuse with the ignition switch off.

The diagnostic trouble code(s) can be read by the number of blinks of the Malfunction Indicator Lamp when TE1 and E1 terminals on the DLC1 are connected. When 2 or more codes are indicated, the lowest number (code) will appear first.

If a malfunction is detected when in the test mode, the ECM lights up the Malfunction Indicator Lamp to inform the technician of the occurrence of a malfunction (except for code Nos. 42, 43 and 51). I n this case, TE2 and E 1 terminals on the DLC 1 should be connected as shown later. (See page EG2–171)

In the test mode, even if the malfunction is corrected, the malfunction code is stored in the ECM memory even when the ignition switch is off (except code Nos. 42, 43, 51 and 53). This also applies in the normal mode. The diagnostic mode (normal or test) and the output of the Malfunction Indicator Lamp can be selected by connecting the TE1, TE2 and Ell terminals on the DLC 1, as shown later.

A test mode function has been added to the functions of the self–diagnosis system of the normal mode for the purpose of detecting malfunctions such as poor contacts, which are difficult to detect in the normal mode. This function fills up the self diagnosis system. The test mode can be implemented if technicians follow the procedure described later.

(See page EG2–171). .

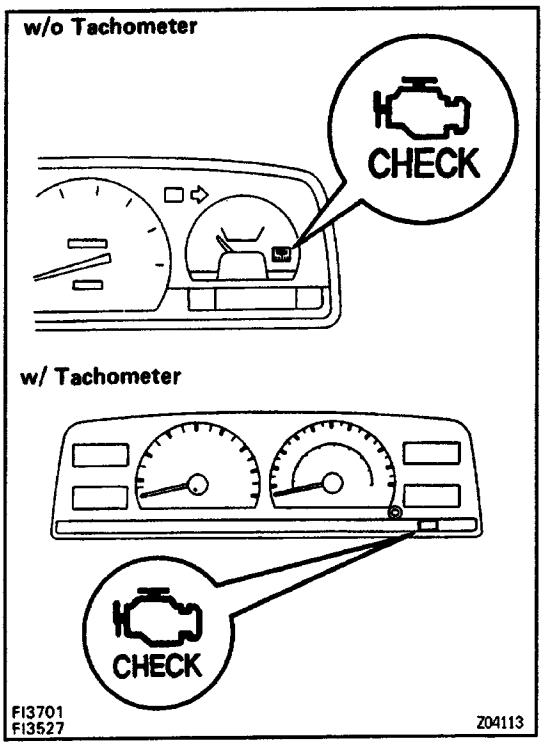

MALFUNCTION INDICATOR LAMP (MIL) CHECK

1. The Malfunction Indicator Lamp will come on when the ignition switch is turned ON and the engine is not running.
2. When the engine is started, the Malfunction Indicator Lamp should go oft.
   If the light remains on, the diagnosis system has detected a malfunction or abnormality in the system.

DIAGNOSTIC TROUBLE CODES OUTPUT

Normal mode:

To obtain an output of diagnostic trouble codes, proceed as follows:

1. Initial conditions

(a) Battery voltage above 11 volts or more.
(b) Throttle valve fully closed (throttle position sensor IDL points closed).
(c) Transmission in neutral position.
(d) Accessories switched OFF.
(e) Engine at normal operating temperature.

2. Turn the ignition switch ON. Do not start the engine.

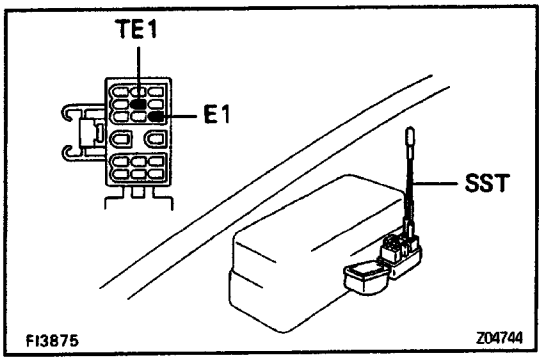

3. Using SST, connect terminals TE 1 and E 1 of the DLC 1.
   SST 09843–18020
   HINT: The DLC1 is located near the No.2 relay block.

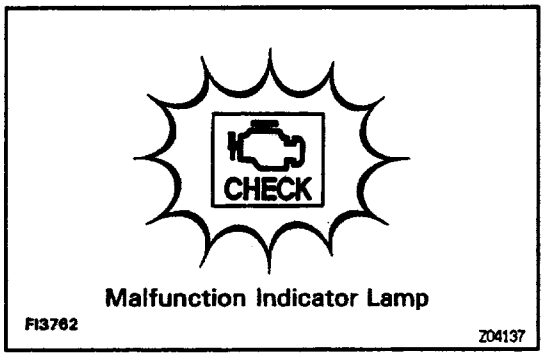

4. Read the diagnostic trouble code as indicated by the number of flashes of the Malfunction Indicator Lamp.
For details of the diagnostic trouble codes, (See pages EG2–175 and 176).

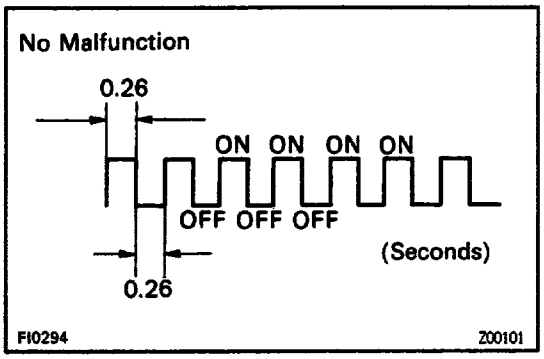

(a) Normal System Operation (no malfunction)

- The light will alternately blink ON and OFF at 0.26 seconds intervals.

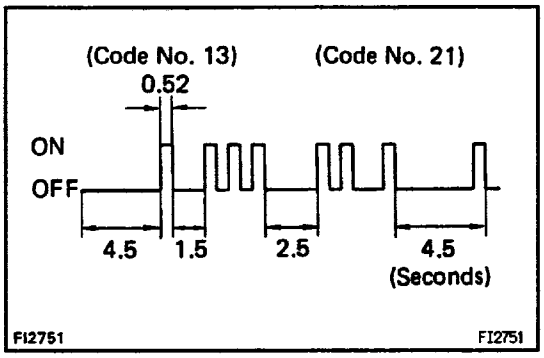

(b) Malfunction Code Indication

- The light will blink a number of times equal to the malfunction code with pauses as follows:

1. Between the first digit and second digit, 1.5 seconds.
2. Between code and code, 2.5 seconds.
3. Between all malfunction codes 4.5 seconds.

The diagnostic trouble code series will be repeated as long as the DLC1 terminals TE 1 and E 1 are connected.

HINT: In the event of a number of trouble codes, indication will begin from the smallest value and continue to the largest in order.

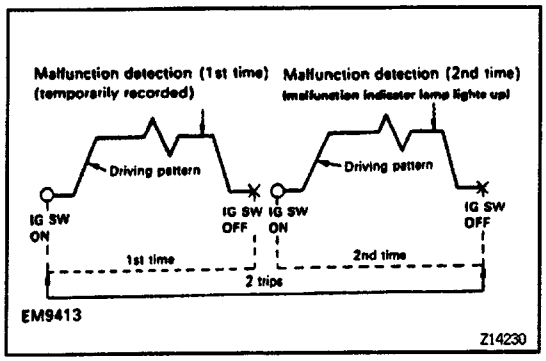

(c) 2 trip detection logic:

For diagnostic trouble codes 21, 25, 26 and 71 ”2 trip detection logic” is used. With this logic, when a logic malfunction is first detected, the malfunction is temporarily stored in the ECM memory. If the same case is detected again during the second drive test, this second detection causes the malfunction indicator lamp to light up.

The 2 trip repeats the same mode a 2nd time.

(However, the IG SW must be turned OFF between the 1 st time and 2nd time).

5. After the diagnosis check, remove SST.

SST 09843–18020

Test mode:

HINT:

- Compared to the normal mode, the test mode has an increased sensing ability to detect malfunctions.
- It can also detect malfunctions in the starter signal circuit, air conditioning signal and park/ neutral position switch signal.
- Furthermore, the same diagnostic items which are detected in the normal mode can also be detected in test mode.

To obtain an output of diagnostic trouble codes, proceed as follows:

1. Initial conditions

(a) Battery voltage 11 volts or more

(b) Transmission in neutral position

(c) Accessories switched OFF

(d) Engine at normal operating temperature

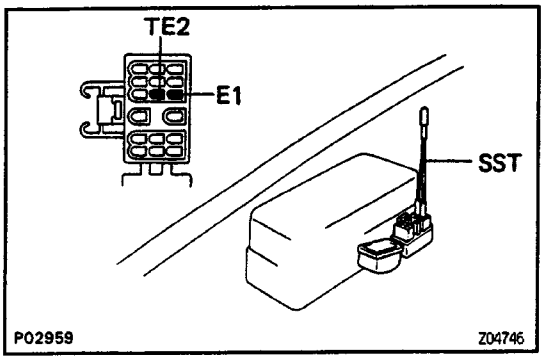

2. First using SST, connect terminals TE2 and E1 of the DLC1, then turn the ignition switch ON to begin the diagnosis in the test mode.

SST 09843–18020

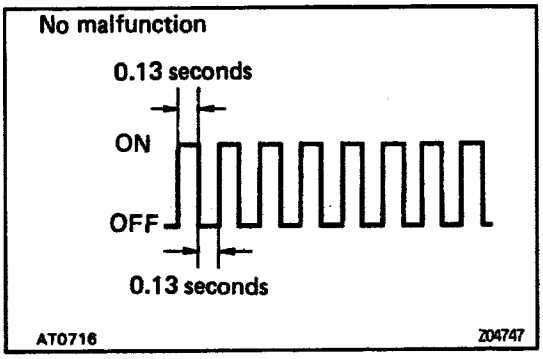

HINT: To confirm that the test mode is operating, check that the Malfunction Indicator Lamp flashes when the ignition awitch is turned ON.

3. Start the engine and drive the vehicle at a speed of 10 km/h or higher.
4. Simulate the conditions of the malfunction described by the customer.

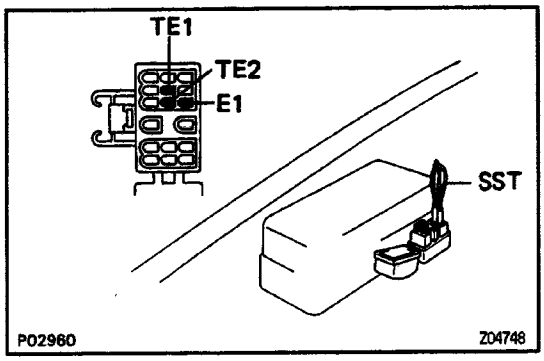

5. Connect terminals TE1 and E1 of the DLC 1.
   SST 09843 –18020

8. Read the diagnostic trouble code as indicated by the number of flashes of the Malfunction Indicator Lamp.
   (See pages EG2–175, 176)
7. After the diagnosis check, remove SST.
   SST 09843–18020
   HINT:
   - The test mode will not start if terminals TE2 and E 1 are connected after the ignition switch is turned ON.
   - The starter signal and vehicle speed signal will be diagnosed by the ECM as malfunctions, and code Nos. 42 and 43 will be output, if the operation in step 3 is not done.
   - When the automatic transmission shift lever is in the ”D”, ”2”, ”L” or ”R” shift position, or when the sir conditioning is on or when the accelerator pedal is depressed, code ’51” (Switch condition signal) is output, but this is not abnormal.

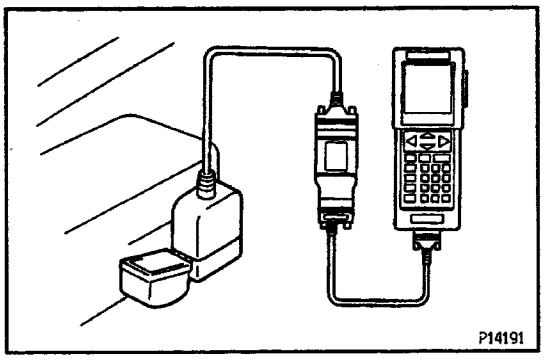

DIAGNOSTIC TROUBLE CODE CHECK USING TOYOTA HAND–HELD TESTER

1. Hook up the TOYOTA hand–held tester to the DLC1.
2. Read the diagnostic trouble codes by following the prompts on the tester screen.
   Please refer to the TOYOTA hand – held tester operator’s manual for further details.

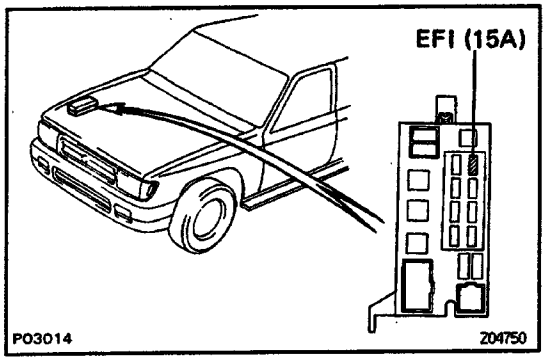

DIAGNOSTIC TROUBLE CODE CANCELLATION

1. After repairing the trouble, the diagnostic trouble code retained in memory by the ECM must be cancelled out by removing the EFI fuse (1 5A) for 30 seconds or more, depending on ambient temperature (the lower the temperature, the longer the fuse must be left out) with the ignition switch OFF.
   HINT:
   - Cancellation can also be done by removing the negative (–) terminal cable from the battery, but in this case other memory systems (radio ETR, clock etc.) will also be cancelled out.
   - If the diagnostic trouble code is not cancelled out, it will be retained by the ECM and appear along with a new code in the event of future trouble.
   - If it is necessary to work on engine components requiring removal of the negative (–) terminal cable from the battery a check must first be made to see if a diagnostic trouble code has been recorded.
2. After cancellation, road test the vehicle to check that a normal code is now read on the Malfunction Indicator Lamp. If the same diagnostic trouble code appears, it indicates that the trouble area has not been repaired thoroughly.

DIAGNOSIS INDICATION

1. When 2 or more codes are stored, the lowest number (code) will appear first.
2. All detected diagnostic trouble codes, except for code No.51 and No.53 will be retained in memory by the ECM from the time of detection until cancelled out.
3. Once the malfunction is cleared, the Malfunction Indicator Lamp on the combination meter will go oft but the diagnostic trouble code(s) remain stored in ECM memory (except for code Nos.16, 43, 51 and 53).

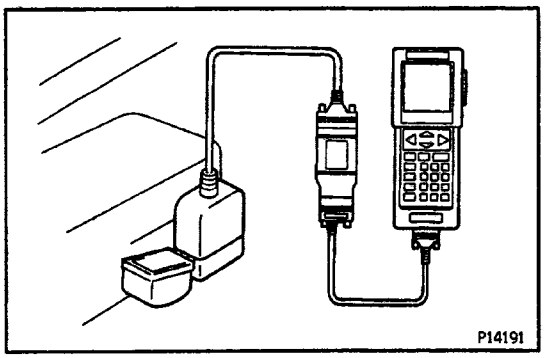

ECM DATA MONITOR USING TOYOTA HAND–HELD TESTER

1. Hookup the TOYOTA hand–held tester to the DLC1.
2. Monitor the ECM data by following the prompts on the tester screen.
   HINT: TOYOTA hand–held tester has a ”Snapshot’ function which records the monitored data.
   Please refer to the TOYOTA hand–held tester operator’s manual for further details.

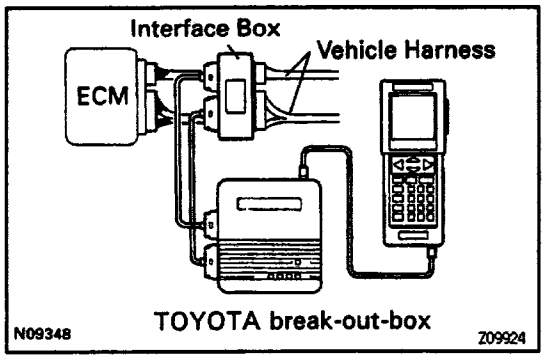

ECM TERMINAL VALUES MEASUREMENT USING TOYOTA BREAK–OUT–BOX AND TOYOTA HAND–HELD TESTER

1. Hook up the TOYOTA break–out–box and TOYOTA hand–held tester to the vehicle.
2. Read the ECM input/output values by following the prompts on the tester screen.
   HINT: TOYOTA hand–held tester has a ”Snapshot’ function. This records the measured values and is effective in the diagnosis of intermittent problems.

Please refer to the TOYOTA hand – held tester / TOYOTA break–out–box operator’s manual for fur–their details.

DIAGNOSTIC TROUBLE CODES

lam–O1

HINT:

- If a malfunction is detected during the diagnostic trouble code check, refer to the circuit indicated in the table, and turn to the corresponding page.
- Your readings may vary from the parameters listed in the table, depending on the instruments used.

DTC No.	Number of blinks Malfunction Indicator lamp	System	*1 Mal–function Indicator Lamp		Diagnosis	Trouble Area	*2 Memory	See Page
			Normal Mode	Test Made				
–		Normal	–	–	Output when no other code is recorded.		–	–
12		RPM Signal	ON	N.A.	No G or NE signal is Input to the ECM for 2 secs. or more after STA turns ON.	• Open or short in NE, G circuit • Distributor • Open or short in STA circuit • ECM	O	EG2–193
13		RPM Signal	ON	ON	NE signal is not input to ECM for 0.1 sec. or more when engine speed is 1,000 rpm or more.	• Open or short in NE circuit • Distributor • ECM	O	IG–17
14		Ignition Signal	ON	N.A.	IGF signal from igniter is not input to ECM for 6 consecutive ignitions.	• Open or short in IGF or IGT circuit from igniter to ECM • Igniter • ECM	O	EG2–195
316		A/T Control Signal	ON	N.A.	Normal signal is not output from ECU CPU.	• ECM	x	–
21		Heated Oxygen Sensor Signal	ON		(1) Open or short in heater circuit of heated oxygen sensor for 0.5 sec. or more. (HT) (2) At normal driving speed (below 60 mph and engine speed is above 1,500 rpm), amplitude of heated oxygen sensor signal (OX) is reduced to between 0.35 – 0.70 V continuously for 60 secs. or more. *2 trip detection logic–(2)	• Open or short in heater circuit of heated oxygen sensor • Heated oxygen sensor heater • ECM • Open or short in heated oxy-gen sensor circuit • Heated oxygen sensor • ECM	O	EG2–199
22		Engine Coolant Temp. Sensor Signal	ON	ON	Open or short in engine coolant temp. sensor circuit for 0.5 sec. or more. (THW)	• Open or short in engine coolant temp. sensor circuit • Engine coolant temp. sensor • ECM	O	EG2–192
24		Intake Air Temp. Sensor Signal	ON	ON	Open or short in intake air temp. sensor circuit for 0.5 sec. or more. (THA)	• Open or short in intake air temp. circuit • Intake air temp. sensor • ECM	O	EG2–190
25		Air–Fuel Ratio Lean Malfunction	ON	ON	(1) Heated oxygen sensor output is less than 0.45 V for at least 90 secs. When heated oxygen sensor is warmed up (racing at 2,000 rpm) and drive at 50 –100 km/h *5 (2) When the engine speed varies by more than 15 rpm over the preceding crankshaft position period during a period of 50 seconds during idling with the engine coolant temp. 75˚C (167˚F) or more. *4 2 trip detection logic–(1) and (2)	• Engine ground bolt loose • Open in E1 circuit • Open in injector circuit • Fuel line pressure (injector block-age, etc.) • Open or short in heated oxygen sensor circuit • Heated oxygen sensor • Ignition system • Engine coolant temp. sensor • Volume air flow meter (Air intake) • ECM	O	EG2–197 EG2–199
26		Air–Fuel Ratio Rich Malfunction	ON	ON		• Engine ground bolt loose • Open in E1 circuit • Short in injector circuit • Fuel line pressure (injector leakage, etc.) • Open or short in cold start injec-tor circuit • Cold start injector • Open or short in heated oxygen sensor circuit • Heated oxygen sensor • Engine coolant temp sensor a • Volume air flow meter • Compression pressure • ECM	O	

DIAGNOSTIC TROUBLE CODES (Cont'd)

DTC No.	Number of blinks Malfunction Indicator Lamp	System	*1 Malfunction Indicator Lamp		Diagnosis .	Trouble Area	*2 Memory	See Page
			Normal Mode	Test Mode				
*7 27	FI3294	Sub Heated Oxygen Sensor Signal	ON	ON	(1) Open or short in heater circuit of sub heated oxygen sensor for 0.5 sec. or more. (HT2) (2) When sub heated oxygen sensor is warmed up and full acceleration continued for 2 seconds, output of main heated oxygen sensor is 0.45 V or more (rich) and output of sub heated oxygen sensor is 0.45 V or less (lean). (OX2) (2 trip detection logic)	• Open or short in heater circuit of sub heated oxygen sensor circuit • Short or open in sub heated oxygen sensor circuit Sub heated oxygen sensor • ECM	O	EG2–199
31	FI1612	Volume Air Flow Meter Signal	ON	ON	At idling, open or short detected continuously for 0.5 sec. or more in volume air flow meter circuit. • Open – VC • Short – VC – E2	• Open or short in volume air flow meter circuit • Volume air flow meter • ECM	O	EG2–190
32	FI1613	Volume Air Flow Meter Signal	ON	ON	Open or short detected continuously for 0.5 sec. or more in volume air flow meter circuit. • Open – E2 • short – VS – VC		O	EG2–190
41	FI1614	Throttle Position Sensor Signal	●	ON	Open or short detected in throttle position sensor signal (VTA) for 0.5 sec. or more. IDL contact is ON and VTA output exceeds 1.45 V	• Open or short in throttle position sensor circuit • Throttle position sensor • ECM	O	EG2–188
42	FI1615	Vehicle Speed Sensor Signal	ON^	OFF	SPD signal is not input to the ECM for at least 8 seconds during high load driving with engine speed between 2,750 rpm and 4,000 rpm.	• Open or short in vehicle speed sensor circuit • Vehicle speed sensor ECM	O	–
43	FI1616	Starter Signal	ON N.A.	OFF	Starter signal (STA) is not input to ECM even once until engine reaches 800 rpm or more when cranking. .	• Open or short in starter signal circuit • Open or short in IG SW or main relay circuit • ECM	x	EG2–193
52	FI1618	Knock Sensor Signal	ON	Y1.A.	With engine speed between 1,600 rpm – 5,200 rpm, signal from knock sensor is not input to ECM for 6 revolution. (KN K)	• Open or short in knock sensor circuit • Knock sensor (looseness, etc.) • ECM	O	–
53	FI1619	Knock Control Signal	ON	N.A.	Engine speed is between 650 rpm and 5,200 rpm and engine control module (for knock control) malfunction is detected.	• ECM	x	–
71	FI2622	EGR System Mal–function	ON	ON	With the engine coolant temp. at0˚C (140˚F) or more, 240 seconds from start of EGR operation. The EGR gas temp. is less than 55˚C (131˚F) and the EGR gas temp. has risen less than 20˚C. (36˚C) during the 240 seconds. *4 2 trip detection logic	• Open in EGR gas temp. sensor circuit • Open in VSV circuit for EG R • EGR vacuum hose disconnected, valve stuck • Clogged in EGR gas passage • ECM	O	EG2–149
51	FI1617	Switch Condition Signal	N.A.	OFF	Displayed when A/C is ON, IDL contact OFF or shift position in "R", "D", "2", or "L" positions with the D LC1 terminals E1 and TE1 connected.	• A/C switch circuit • Throttle position sensor IDL circuit • Park/Neutral position switch circuit • Accelerator pedal cable • ECM	x	EG2–188

REMARKS
*1: "ON" displayed in the diagnosis mode column indicates that the malfunction indicator lamp is lighted up when a malfunction
is detected. "OFF" indicates that the "CHECK" does not light up during malfunction diagnosis, even if a malfunction is detected. "N.A." indicates that the item is not included in malfunction diagnosis.
2: "O" in the memory column indicates that a diagnostic trouble code in recorded in the ECM memory when a malfunction occurs. "X" indicates that a diagnostic trouble code is not recorded in the ECM memory even if a malfunction occurs. Accordingly, output of diagnostic results is performed with the IG SW ON.
*3: Only vehicles with A/T.
*4: "2 trip detection logic" (See page EG2–171).
*5: No. (2) in the diagnostic contents of codes No.25 and 26 apply to California specification vehicles only, while (1) applies to all models.
*6: The malfunction indicator lamp comes on if malfunction occurs only for California specifications.
*7: Only for California specification vehicles.

DIAGNOSTIC TROUBLE CODE DETECTION DRIVING PATTERN (Cont'd)

Purpose of the driving pattern.

(a) To simulate diagnostic trouble code detecting condition after diagnostic trouble code is recorded.

(b) To check that the malfunction is corrected when the repair is completed, confirming that diagnostic trouble code is no longer detected.

DTC 21 Heated Oxygen Sensor Circuit

Malfunction: Heated Oxygen Sensor Deterioration

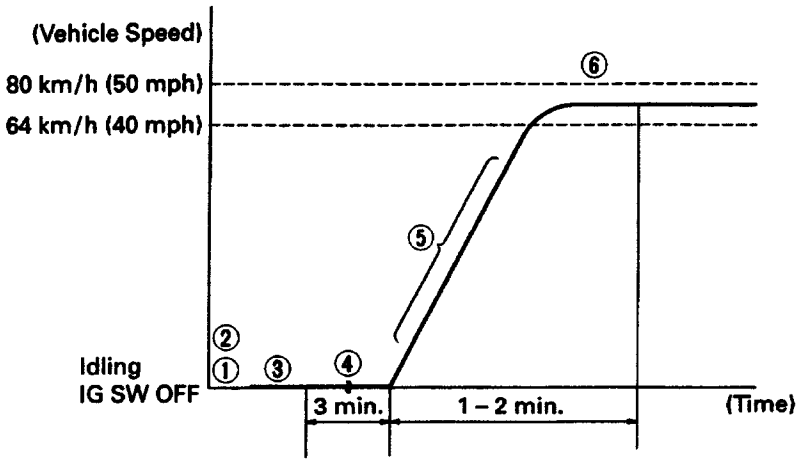

(1) Disconnect the fuse EFI (15 Ay for 10 sec. or more, with IG switched OFF

(2) Initiate test mode (Connect terminal TE2 and E1 of DLC1) with IG switched OFF.

(3) Start the engine and warm it up with all accessories switched OF

(4) Idle the engine for 3 min.

(5)Accelerate gradually and maintain at approximately 1,500 rpm, or within the 1,300to 1,700 rpm range. Turn the A/C on, and drive in "D" for automatic, or in case of manual transmission, upshift appropriately. Shift carefully so that the engine speed does not fall below1,200 rpm. Depress the accelerator pedal gradually and maintain a steady speed to avoid engine braking.

(6) Maintain the vehicle speed at 64 – 80 km/h (40 – 50 mph).

Keep the vehicle running for 1– 2 min. after starting acceleration.

HINT: If a malfunction is detected the Malfunction Indicator Lamp will light up during step (6).

NOTICE: If this procedure Is not strictly followed, you cannot detect the malfunction.

DIAGNOSTIC TROUBLE CODE DETECTION DRIVING PATTERN (Cont'd)

Purpose of the driving pattern.

(a) To simulate diagnostic trouble code detecting condition after diagnostic trouble code is recorded.

(b) To check that the malfunction is corrected when the repair is completed, confirming that diagnostic trouble code is no longer detected.

DTC 25 Air Fuel Ratio Lean Malfunction
26 Air Fuel Ratio Rich Malfunction

Malfunction: Open or Short in Heated Oxygen Sensor

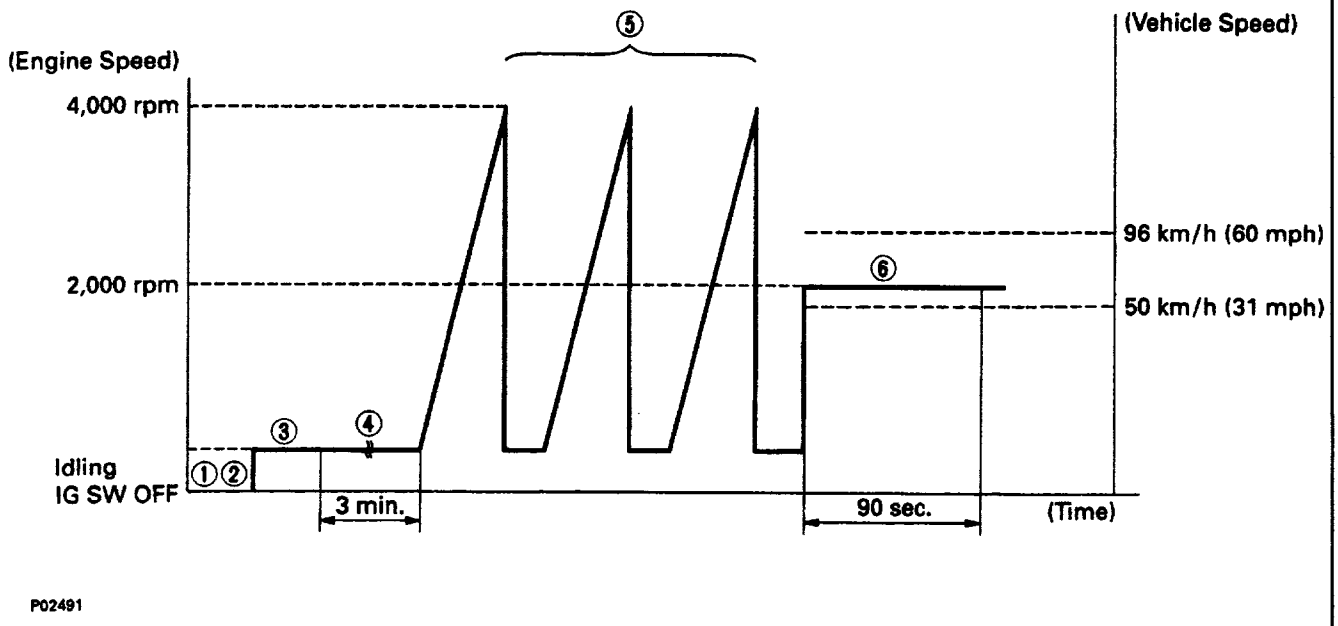

(1) Disconnect the fuse EFI (15 A) for 10 sec. or more, with IG switched OFF

(2) Initiate test mode (Connect terminal TE2 and E1 of DLC1) with IG switched OFF

(3) Start the engine and warn n it up with all accessories switched OFF

(4) Idle the engine for 3 min.

(5) Quickly race the engine to 4,000 rpm 3 times.

(6) Drive at 50 – 96 km/h (30 – 60 mph) (Engine speed 2,000 rpm) for 90 sec.

HINT: If a malfunction is detected the Malfunction Indicator Lamp will light up during step (6)

NOTICE: If this procedure is not strictly followed, you cannot detect the malfunction.

DIAGNOSTIC TROUBLE CODE DETECTION DRIVING PATTERN (Cont'd)

Purpose of the driving pattern.

(a) To simulate diagnostic trouble code detecting condition after diagnostic trouble code is recorded.

(b) To check that the malfunction is corrected when the repair is completed, confirming that diagnostic trouble code is no longer detected.

DTC	25	Air Fuel Ratio Lean Malfunction
	26	Air Fuel Ratio Rich Malfunction

Malfunction: Open or Short in Injector Leak, Blockage

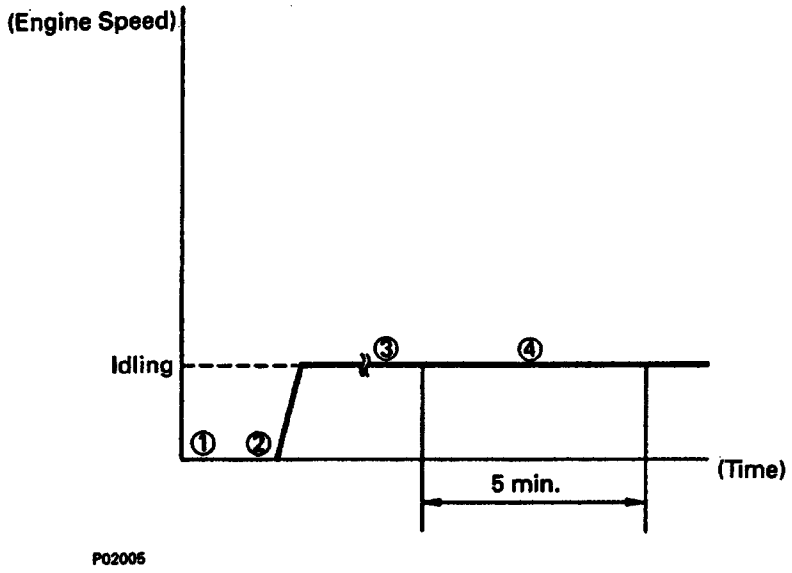

HINT: Before starting this test, ensure engine coolant temp. is 40˚C (104˚F) or less.

Before this test, check the feedback voltage for heated oxygen sensor.

(1) Disconnect the fuse EFI (15 A) for 10 sec. or more, with IG switched OFF

(2) Initiate test mode (Connect terminal TE2 and E1 of DLC1) with IG switched OFF

(3)Start the engine and warm it up with a11 accessories switched OFF

(4) Idle the engine for 5 min.

HINT If a malfunction is detected the Malfunction Indicator Lamp will light up during step (4).

NOTICE: If this procedure is not strictly followed, you cannot detect the malfunction.

DIAGNOSTIC TROUBLE CODE DETECTION DRIVING PATTERN (Cont'd)

Purpose of the driving pattern.

(a) To simulate diagnostic trouble code detecting condition after diagnostic trouble code is recorded.

(b) To check that the malfunction is cleared once the repair is completed, confirming that diagnostic trouble code is no longer detected.

DTC	27	Sub Heated Oxygen Sensor Circuit (CALIFORNIA)

Malfunction: Open or Short in Sub Heated Oxygen Sensor.

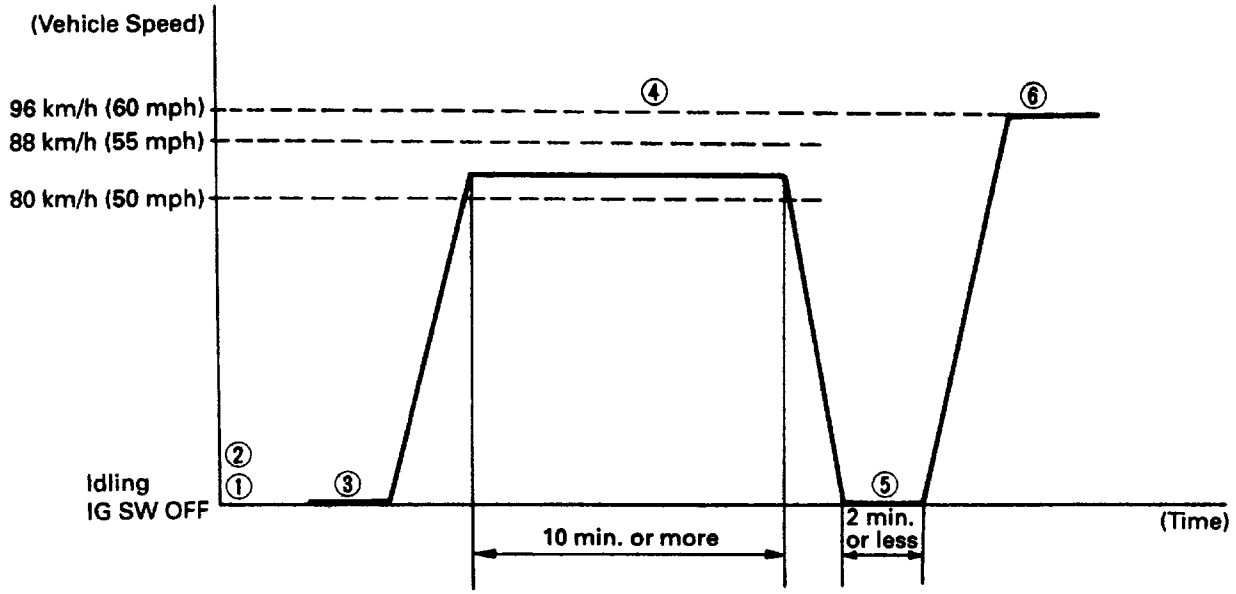

(1) Disconnect the EFI fuse (15 A) for 10 seconds or more, with IG switched OFF

(2) Initiate test mode. (Connect terminals TE2 and E1 of DLC1 with IG switched OFF.

(3) Start the engine and warm it up, with all accessories switched OFF.

(4) Drive at 80 – 88 km/h (50 – 55 mph) for 10 minutes or more.

(5) Stop the vehicle at a safe place and idle the engine for 2 minutes or less.

(6) Accelerate to 96 km/h (60 mph) with the throttle fully open.

HINT: If a malfunction is detected the Malfunction Indicator Lamp will light up during step (6).

NOTICE: If this procedure is not strictly followed, you cannot detect the malfunction.

DIAGNOSTIC TROUBLE CODE. DETECTION DRIVING PATTERN (Cont'd)

Purpose of the driving pattern.

(a) To simulate diagnostic trouble code detecting condition after diagnostic trouble code is recorded.

(b) To check that the malfunction is corrected when the repair is completed, confirming that diagnostic trouble code is no longer detected.

DTC	71	EGR System Malfunction

Malfunction: Short in VSV Circuit for EGR, Loose EGR Hose, Valve Stuck

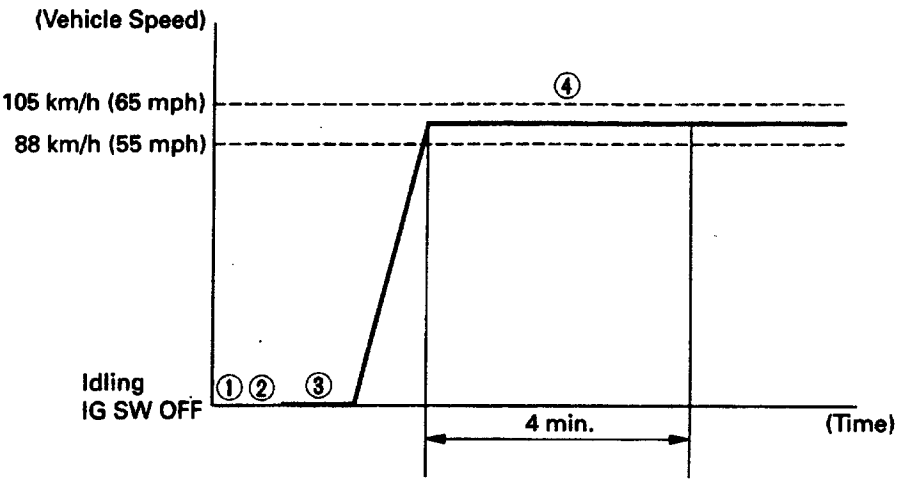

P02545

HINT: When start this test, engine coolant temperature is 40˚C (104˚F) or less.

(A) Disconnect the fuse EFI (15 A) for 10 sec. or more, with IG switched OFF

(B) Initiate test mode (Connect terminal TE2 and E1 of DLC1) with IG switched OFF

(C) Start the engine and warm it up with all accessories switched OFF.

(A) With the transmission in 4th gear ("D" position and 0/D ON forA/T), drive 88–105 km/h (55 – 65 mph) for 4 min.

HINT: If a malfunction is detected the Malfunction Indicator Lamp will light up during step (4) .

NOTICE: If this procedure is not strictly followed, you cannot detect the malfunction.

DIAGNOSIS CIRCUIT INSPECTION

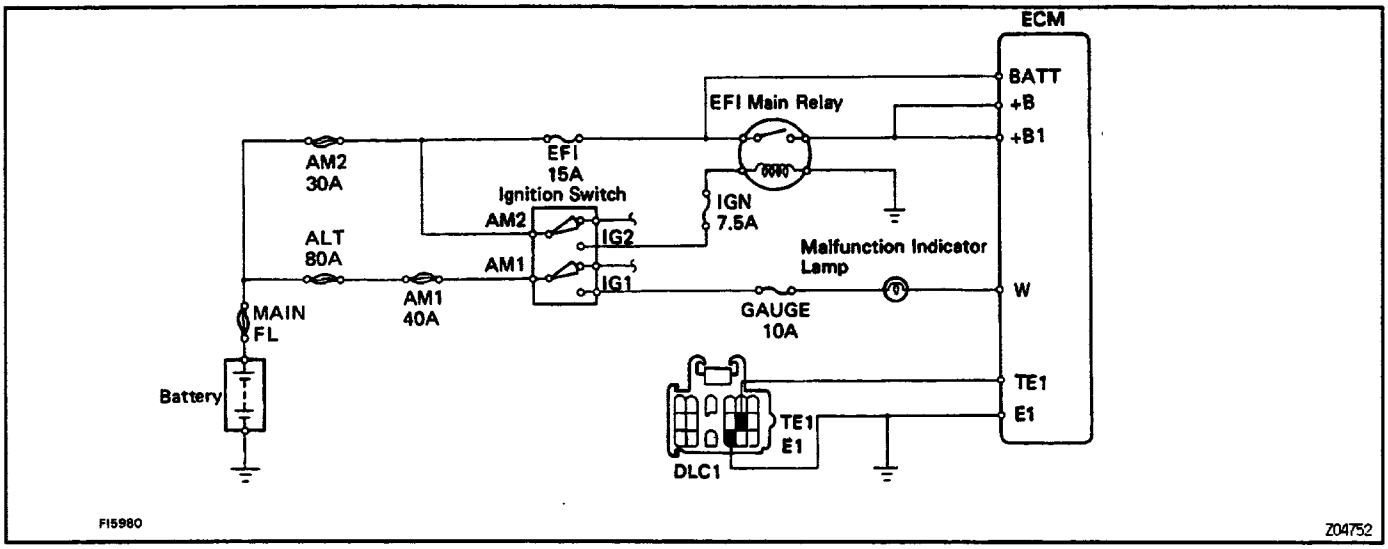

1. Does malfunction indicator lamp come on when ignition switch is at ON?
   - YES → System Normal
   - NO → Does malfunction indicator lamp come on when ECM terminal W is grounded to the body?
     - YES → Check wiring between ECM terminal E1 and body ground.
       - OK → Try another ECM.
       - BAD → Repair or replace.
     - NO → Check bulb, fuse and wiring between ECM and ignition switch.
       - BAD → Repair or replace.

2. Does malfunction indicator lamp go off when the engine is started?
   - YES → System Normal
   - NO → Check wiring between ECM and malfunction Indicator lamp.
     - BAD → Repair.
     - OK → Is there diagnostic trouble code output when DLC1 and terminals TE1 and E1 are connected?
       - NO → Check wiring between ECM terminal TE1 and DLC1 terminal TE1, and ECM terminal E1 and DLC1 terminal E1.
         - OK → Try another ECM.
       - YES → Does malfunction indicator lamp go off after repair according to malfunction code?
         - NO → Further repair required.
         - YES → System OK → Cancel out diagnostic trouble code.

EFI MAIN RELAY

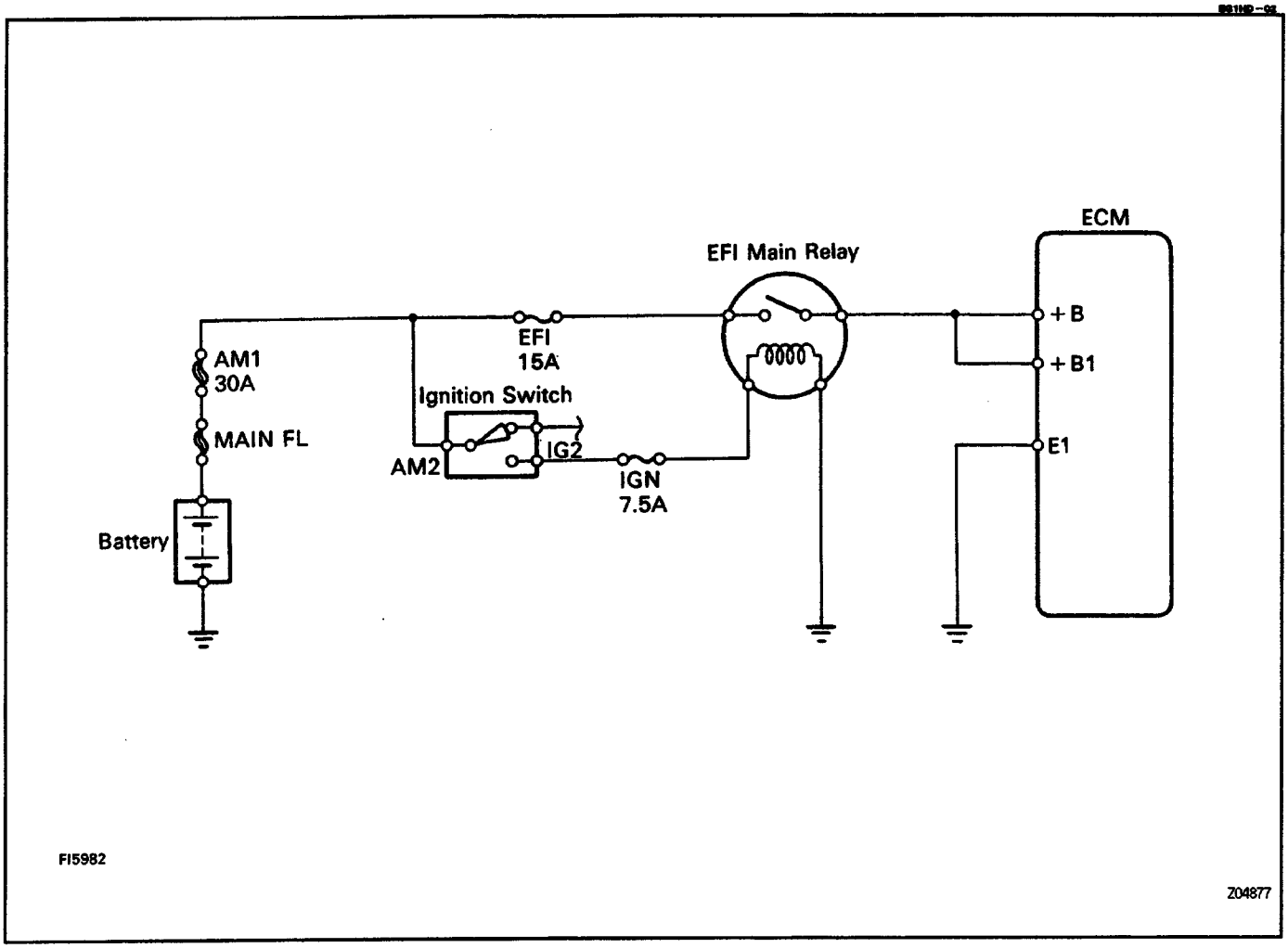

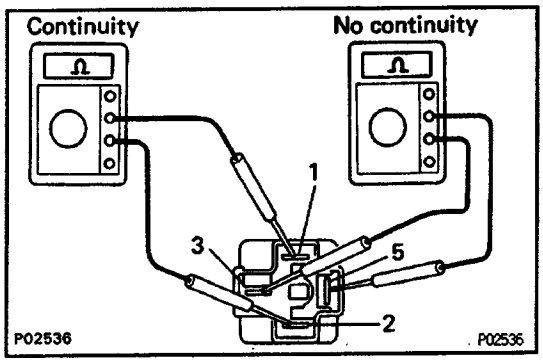

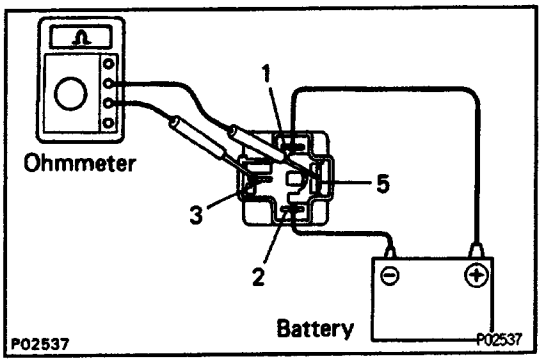

EFI MAIN RELAY INSPECTION

1. INSPECT RELAY CONTINUITY

(a) Using an ohmmeter, check that there is continuity between terminals 1 and 2.

(b) Check that there is no continuity between terminals 3 and 5.

(c) Check that there is no continuity between terminals 2 and 5.

If continuity is not as specified, replace the relay.

2. INSPECT RELAY OPERATION

(a) Apply battery voltage across terminals 1 and 2.

(b) Using an ohmmeter, check that there is continuity between terminals 3 and 5.

If operation is not as specified, replace the relay.

EGR GAS TEMPERATURE SENSOR

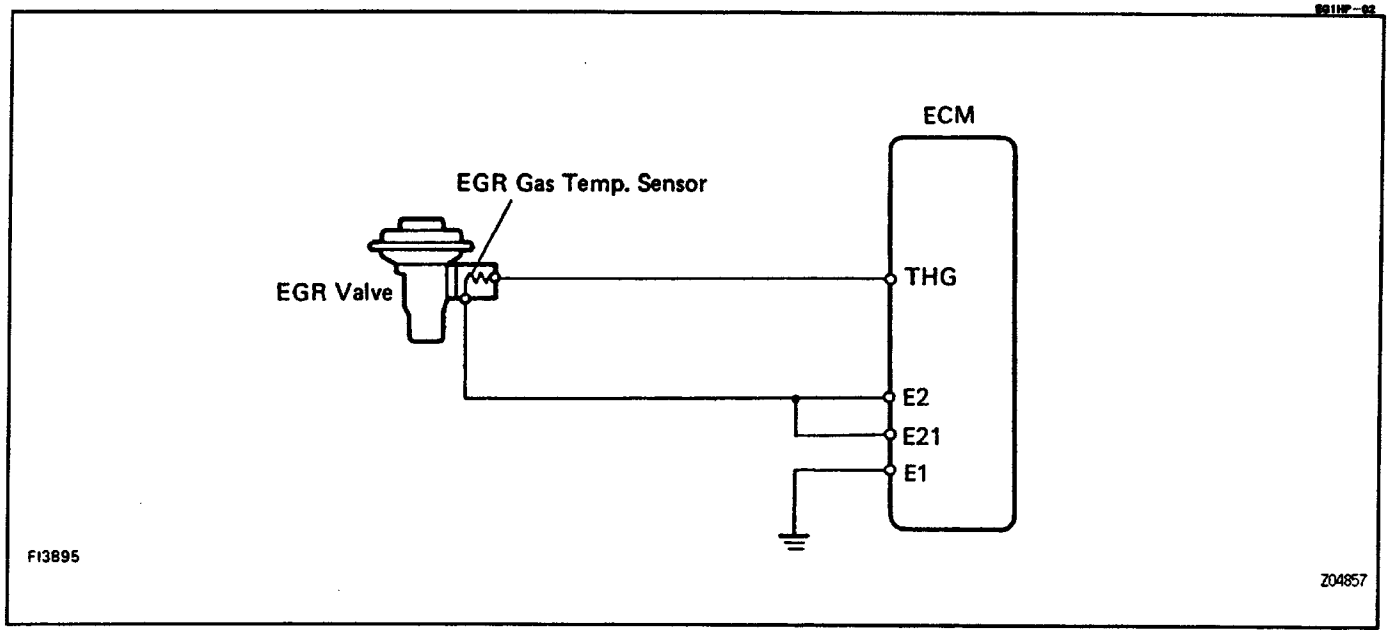

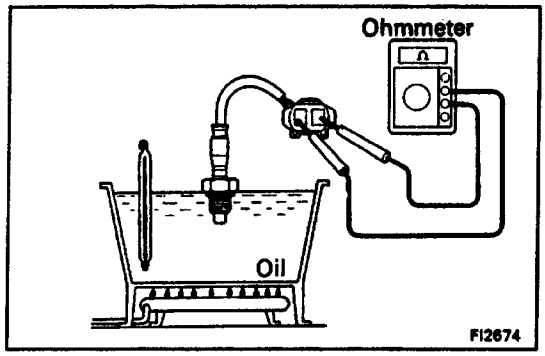

EGR GAS TEMPERATURE SENSOR INSPECTION

MEASURE RESISTANCE OF EGR GAS TEMPERATURE SENSOR

Using an ohmmeter, measure the resistance between both terminals.

Resistance:

At 50˚C (122˚F): 64 – 97 kΩ

At 100˚C (212˚F): 11 – 16 kΩ

At 150˚C (302˚F): 2 – 4 kΩ

If the resistance is not as specified, replace the sensor.

ELECTRONIC PARTS LOCATION

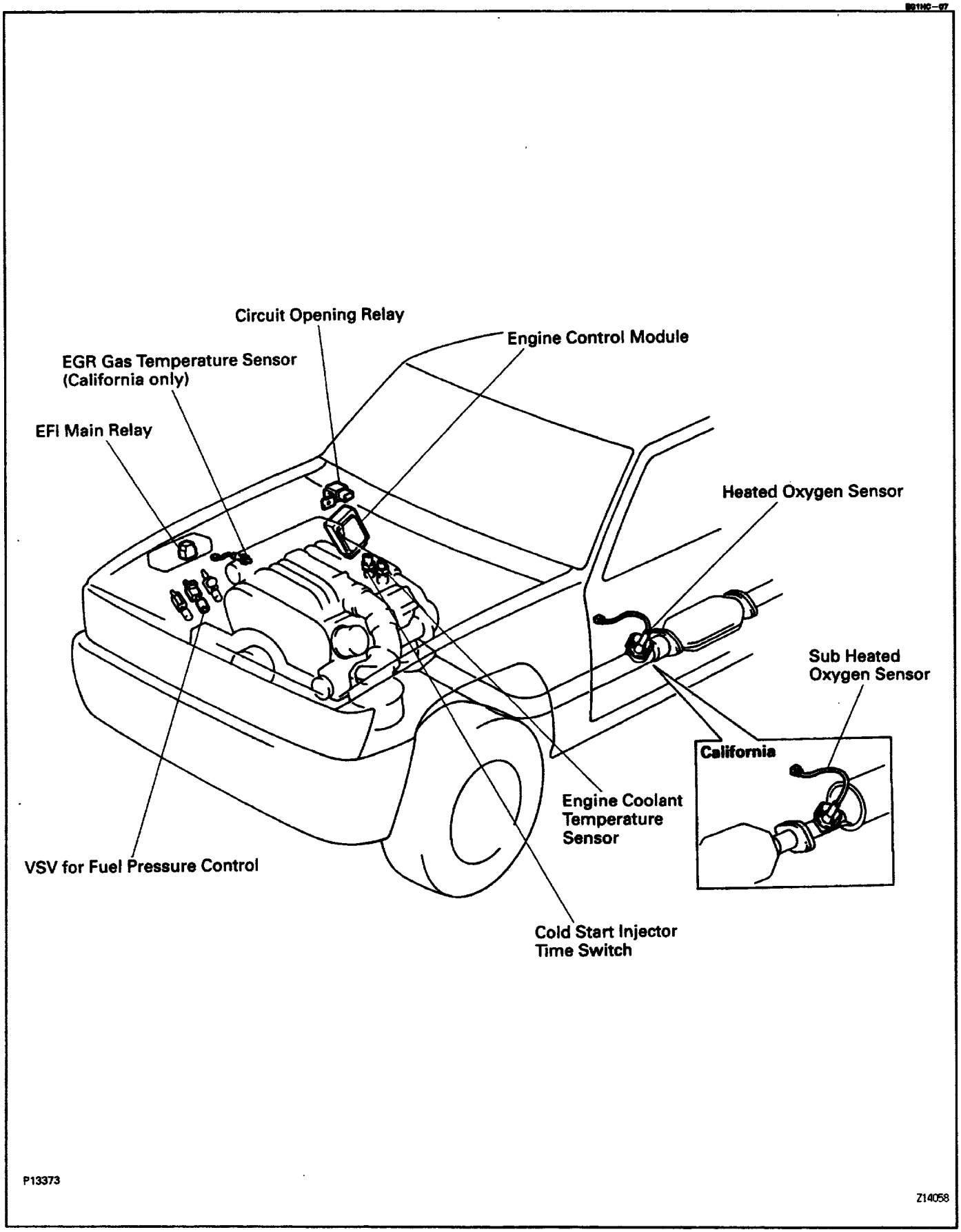

ENGINE CONTROL MODULE (ECM)

ENGINE CONTROL MODULE (ECM) INSPECTION

HINT: The MFI circuit can be checked by measuring the voltage and resistance at the wiring connectors of the engine control module (ECM).

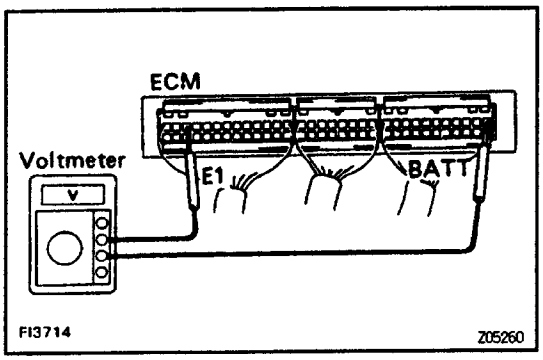

1. INSPECT VOLTAGE OF ENGINE CONTROL MODULE (ECM)

Check the voltage between each terminal of the wiring connectors.

- Turn the ignition switch ON.
- Measure the voltage at each terminal.

HINT:

- Do all voltage measurements with the connectors connected.
- Verify that the battery voltage is 11 V or more when the ignition switch is ON.

ECM Wiring Connectors Voltage

Terminals	Condition		STD voltage
BATT – E1	–		9 – 14
+B – E1	Ignition SW ON .		
+B1 – E1			
IDL – E2 (E21)	Ignition SW ON	Throttle valve open	9 – 14
VC – E2 (E21)		–	4.5 – 5.5
VTA – E2 (E21)		Throttle valve fully closed (Throttle opener must be cancelled first)	0.3 – 0.8
		Throttle valve fully open	3.2 – 4.9
VC – E2 (E21)	Ignition SW. ON	–	4.5 – 5.5
VS – E2 (E21)		Measuring Plate fully closed	4.0 – 5.5
		Measuring plate fully open	0.2 – 0.5
	Idling		2.3 – 2.8
	3,000 rpm		0.3 – 1.0
THA – E2 (E21)	Ignition SW ON	Intake air temperature 20°C (68°F)	0.5 – 3.4
THW – E2 (E21)	Ignition SW 4N	Engine coolant temperature 80°C (176°F0	0.2 – 1.0
STA – E1	Cranking		6 V or more
#10 – E01 #20 – E02	Ignition SW ON		9 – 14
IGT – E1	Idling		Pulse generation
W – E1	No trouble (malfunction indicator lamp off) and engine running		9 –14
STJ – E1	Cranking	Engine coolant temperature 80°C (176°F)	6 V or more
STP – E1	Stop light switch ON		7.5 – 14

Engine Control Module (ECM) Terminals

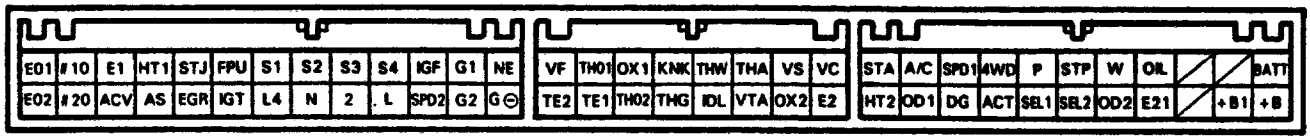

FI2796

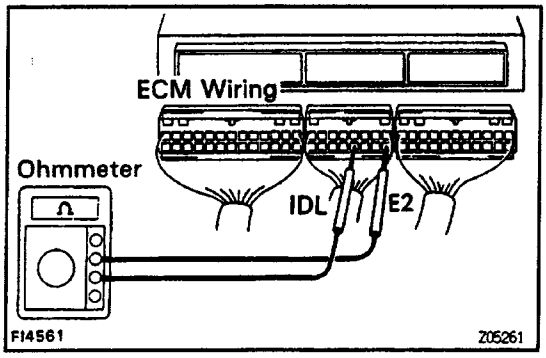

2. INSPECT RESISTANCE OF ENGINE CONTROL MODULE (ECM)

NOTICE:

- **Do not touch the engine control module (ECM) terminals.**
- **The tester probe should be inserted into the wiring connector from the wiring side.**

Check the resistance between each terminal of the wiring connectors.

- **Disconnect the connectors from the engine control module (ECM).**
- **Measure the resistance at each terminal.**

ECM Wiring Connectors Resistance

Terminals	Condition	Resistance (Ω)
IDL – E2 (E21)	Throttle valve open	Infinity
	Throttle valve fully closed (Throttle opener must be cancelled first)	2.3 or less
VTA – E2 (E21)	Throttle valve fully open	3.1 – 12.1
	Throttle valve fully closed (Throttle opener must be cancelled first)	0.47 – 6.1
VC – E2 (E21)	Volume air flow meter connector disconnected	3.9 – 9.0
THA – E2 (E21)	Intake air temperature 20°C (68°F)	2 – 3
THW – E2 (E21)	Engine coolant temperature 80°C (176°F)	0.2 – 0.4
+B – E1	–	0.2 – 0.4
VC – E2 (E21)	Throttle position sensor connector disconnected	0.2 – 0.4
VS – E2 (E21)	Measuring plate fully closed	0.2 – 0.6
	Measuring plate fully open	0.02 – 1.20
G1, G2 – G ⊖	Cold (–10 – 50°C, 14 – 122°F)	0.125 – 0.200
	Hot (50 – 100°C, 122 – 212°F)	0.160 – 0.235
NE – G ⊖	Cold (–10 – 50°C, 14 – 122°F)	0.155 – 0.250
	Hot (50 – 100°C, 122 –. 212°F)	0.190 – 0.290.

Engine Control Module (ECM) Terminals

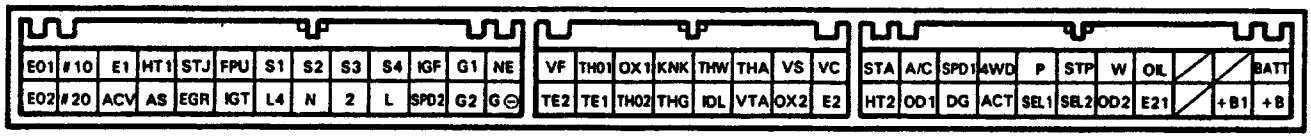

FI2796

V04009

ENGINE COOLANT TEMPERATURE (ECT) SENSOR

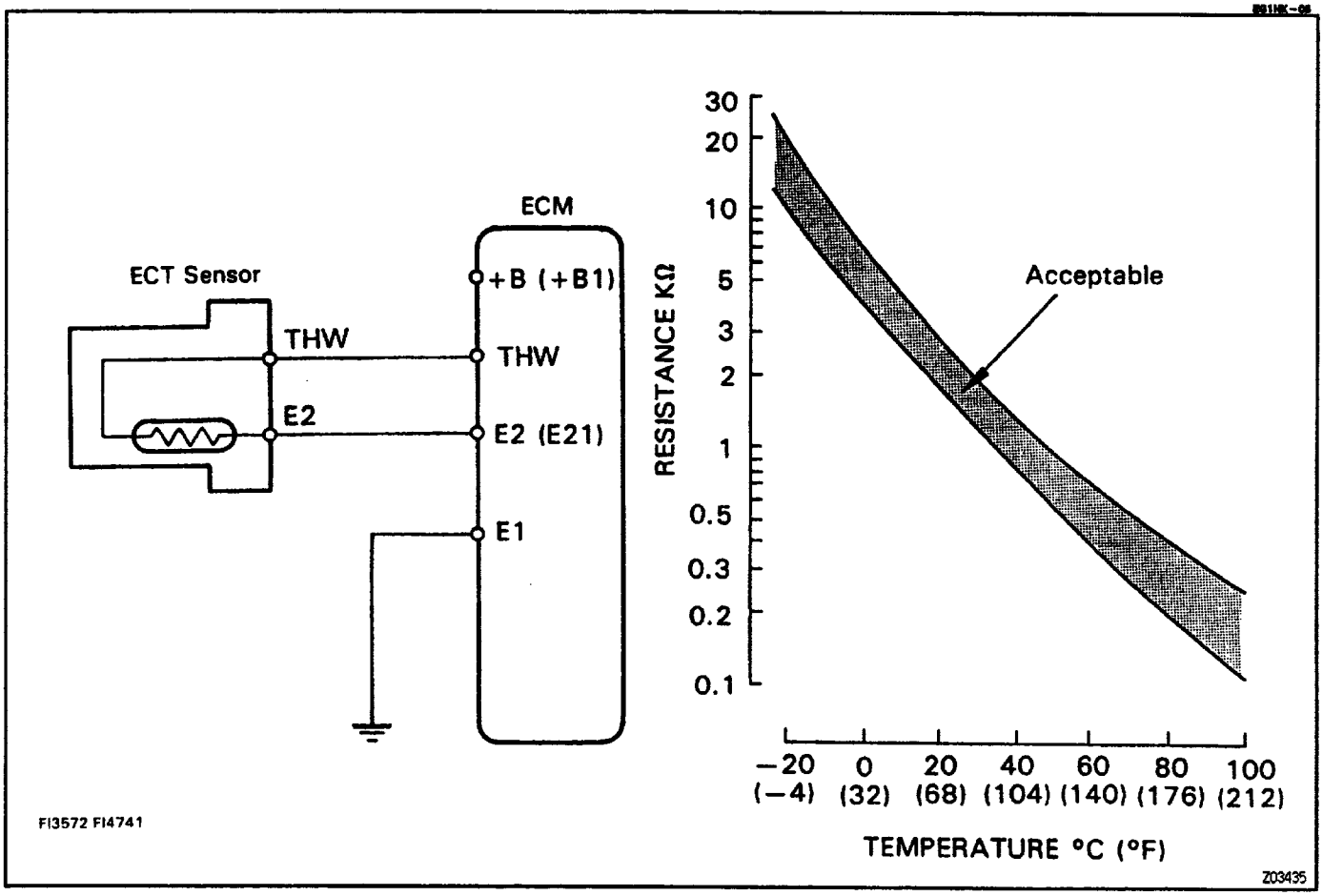

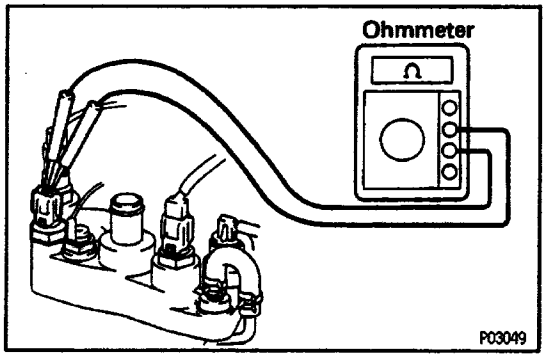

ENGINE COOLANT TEMPERATURE SENSOR INSPECTION

MEASURE RESISTANCE OF ENGINE COOLANT TEMPERATURE SENSOR

(a) Disconnect the connector.

(b) Using an ohmmeter, measure the resistance between terminals.

Resistance:

Refer to the graph above

If the resistance is not as specified, replace the sensor.

(c) Reconnect the connector.

FUEL CUT RPM

FUEL CUT RPM INSPECTION

1. WARM UP ENGINE

Allow the engine to warm up to normal operating temperature.

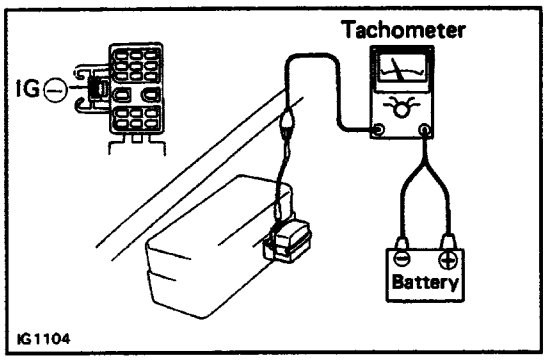

2. CONNECT TACHOMETER

Connect the test probe of a tachometer to terminal IG (–) of the DLC1.

NOTICE:

- **Never allow the tachometer terminal to touch ground a: it could result in damage to the igniter and/or ignition coil.**
- **As some tachometers ate not compatible with this ignition system, we recommend that you confirm the compatibility of your unit before use.**

3. INSPECT FUEL CUT OPERATION

(a) Increase the engine speed to at least 2,500 rpm.

(b) Check for injector operating sound.

(c) Check that when the throttle lever is released, injector operation sound stops momentarily and then resumes.

HINT:.

- The vehicle should be stopped.
- Accessories switched OFF.

Fuel return rpm:

M/T

1,300 rpm

A/T

1.500 rpm

4. DISCONNECT TACHOMETER

FUEL PRESSURE CONTROL SYSTEM

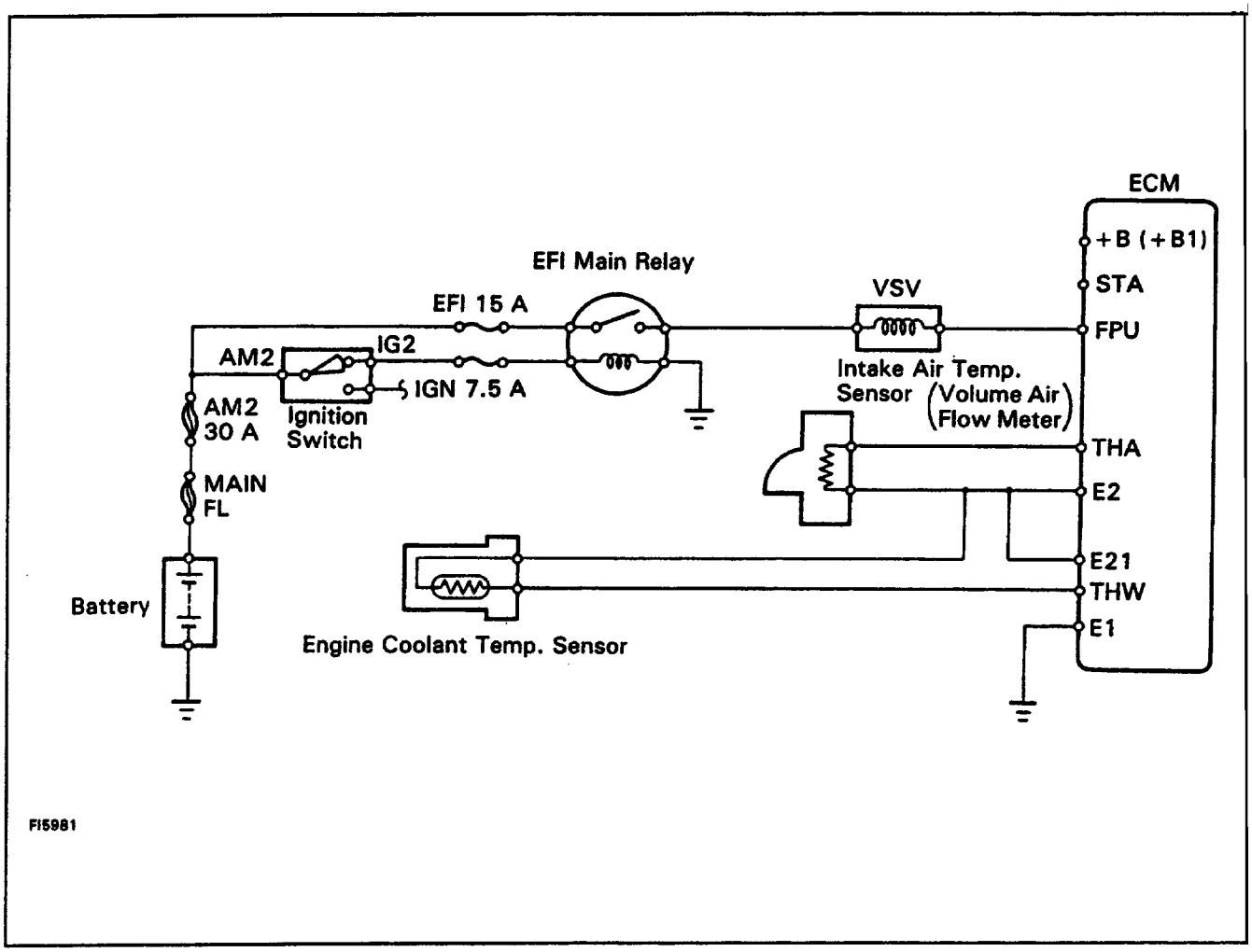

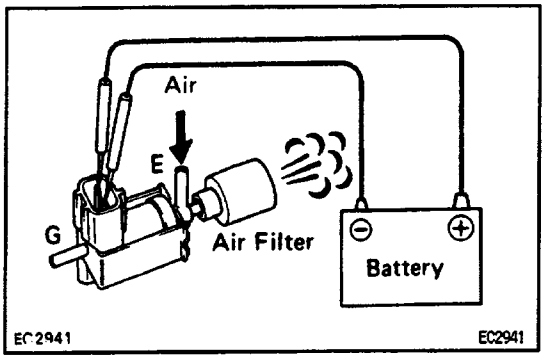

FUEL PRESSURE VSV INSPECTION

1. CHECK VSV OPERATION

(a) Connect the VSV terminals to the battery terminals as illustrated.

(b) Blow into pipe E and check that air comes out of air filter.

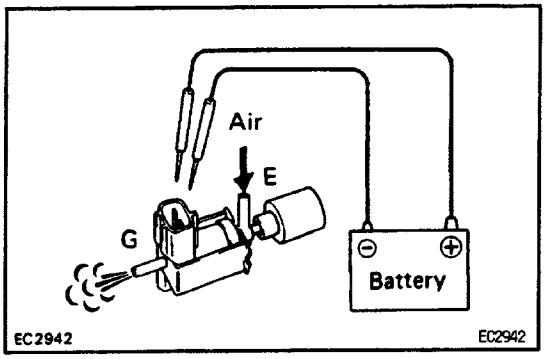

(c) Disconnect the battery from the VSV.

(d) Blow into pipe E and check that air comes out of pipe G.
If a problem is found, repair or replace the VSV.

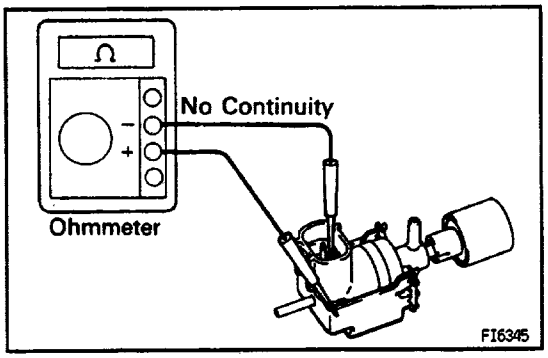

2. CHECK FOR SHORT CIRCUIT

Using an ohmmeter, check that there is no continuity between each terminal and the VSV body.
If there is continuity, replace the VSV.

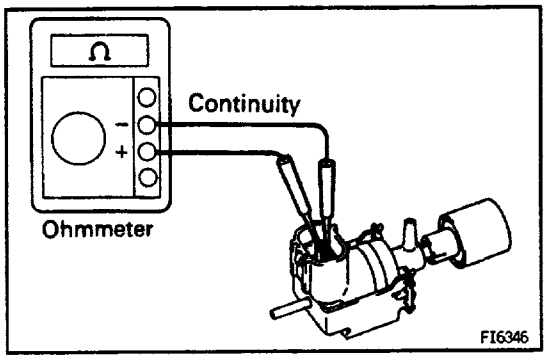

3. CHECK FOR OPEN CIRCUIT

Using an ohmmeter, measure the resistance between both terminals as illustrated.

Specified resistance:

At 20˚C (68˚F): 30 – 50Ω

FUEL PRESSURE REGULATOR

ON–VEHICLE INSPECTION

CHECK FUEL PRESSURE

(See step 2 in on–vehicle inspection in fuel pump)

COMPONENTS FOR REMOVAL AND INSTALLATION

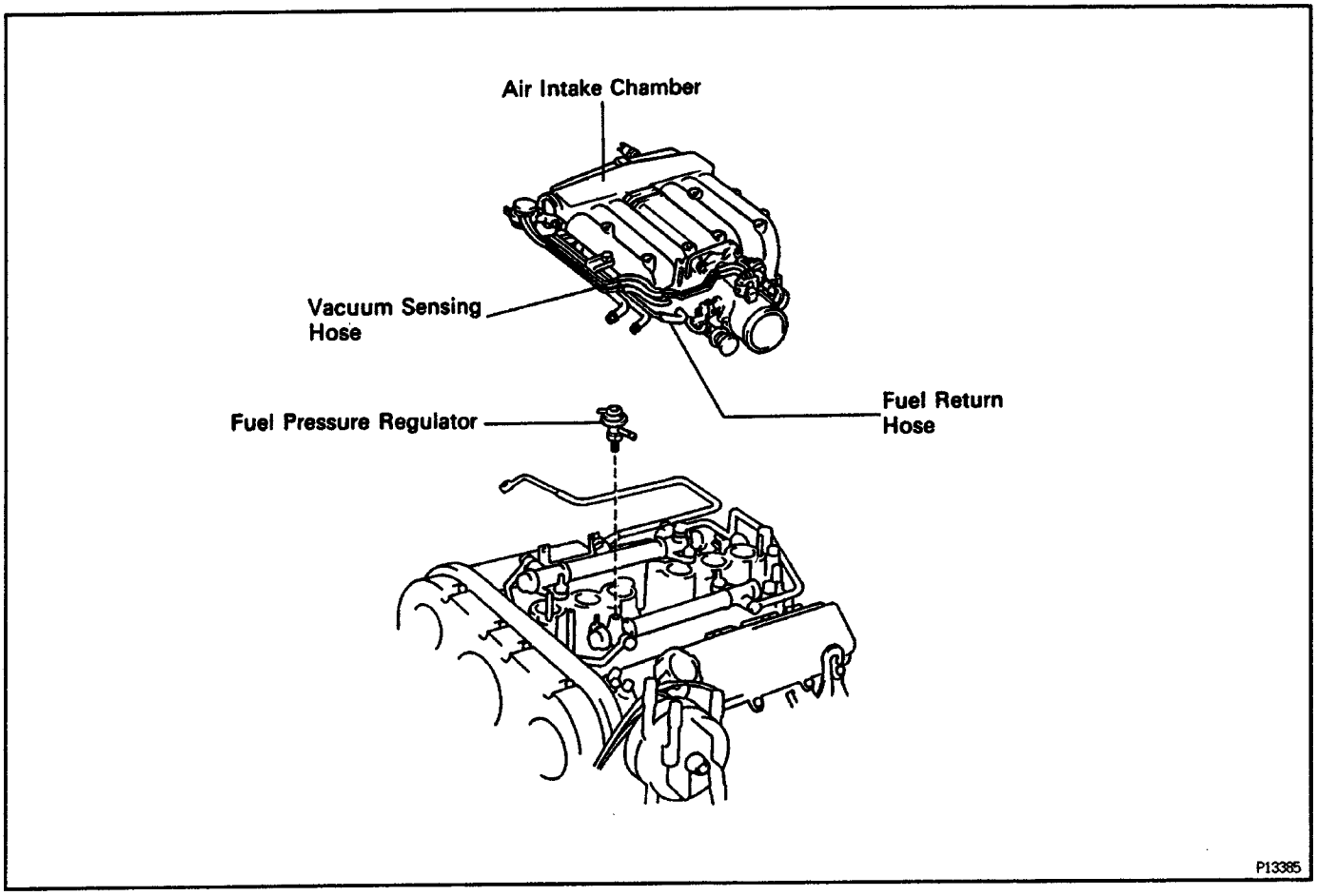

FUEL PRESSURE REGULATOR REMOVAL

1. DRAIN ENGINE COOLANT

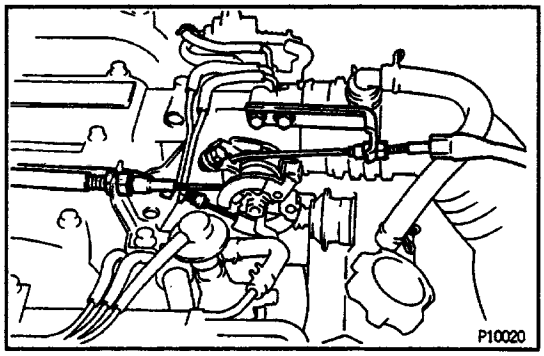

2. DISCONNECT THESE CABLES:

(a) w/ Cruise control:
Actuator cable with bracket

(b) Accelerator cable

(c) A/T:
Throttle cable

3. DISCONNECT AIR CLEANER HOSE

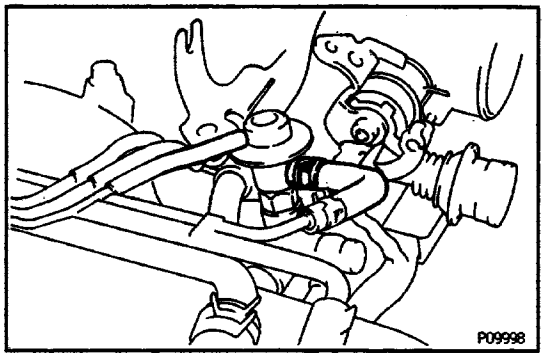

4. DISCONNECT VACUUM SENSING HOSE

6. DISCONNECT FUEL RETURN HOSE

(a) Place a suitable container or shop towel under the fuel pressure regulator.

(b) Disconnect the fuel return hose from the fuel pressure regulator.

6. REMOVE AIR INTAKE CHAMBER

(a) Disconnect the throttle position sensor connector.

(b) Disconnect the canister vacuum hose from the throttle body.

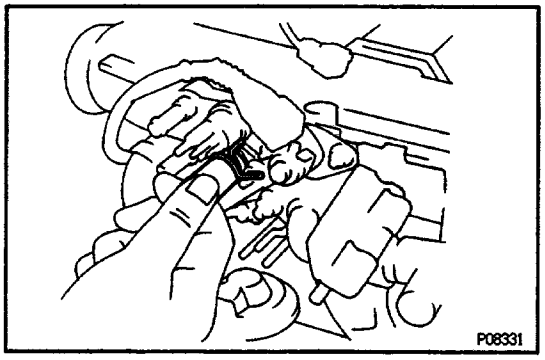

(c) Disconnect the PCV hose from the union.

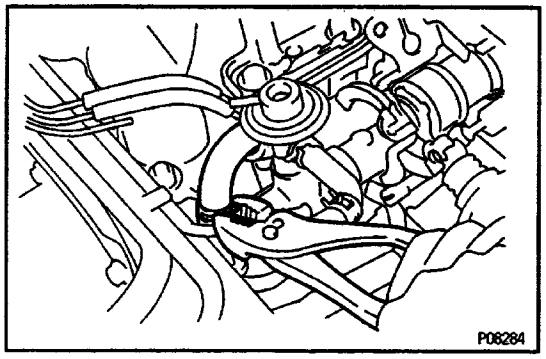

(d) Disconnect the No.4 water bypass hose from the union of the intake manifold.

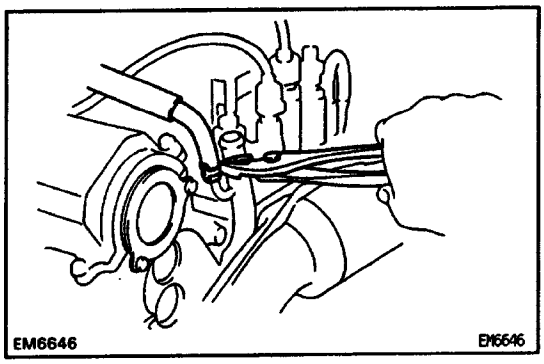

(e) Disconnect the No.5 water bypass hose from the water bypass pipe.

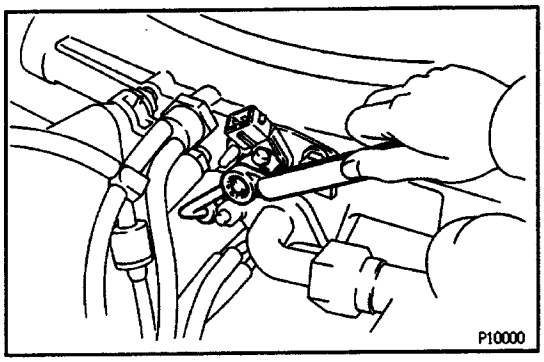

(f) Disconnect the cold start injector connector.
(g) Remove the union bolt, 2 gaskets and cold start injector tube.

(h) Disconnect the vacuum hose from the gas filter.
(i) Disconnect the EGR gas temp. sensor connector.
(j) Disconnect the EGR vacuum hoses from the air pipe and EGR vacuum modulator.

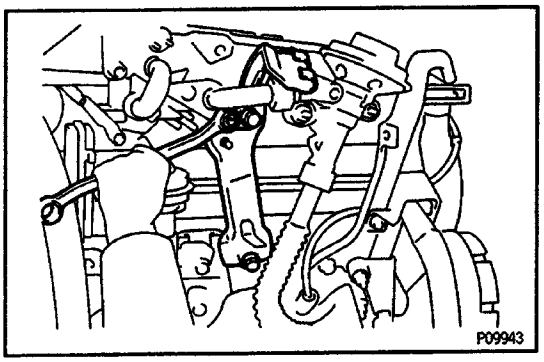

(k) Remove the nut, 2 bolts, intake chamber stay and throttle cable bracket.

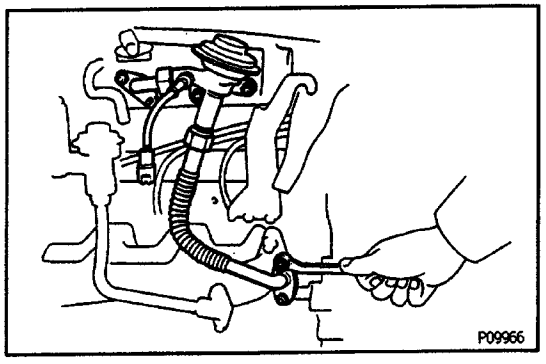

(l) Remove the 5 nuts, EGR valve with the pipes and 2 gaskets.

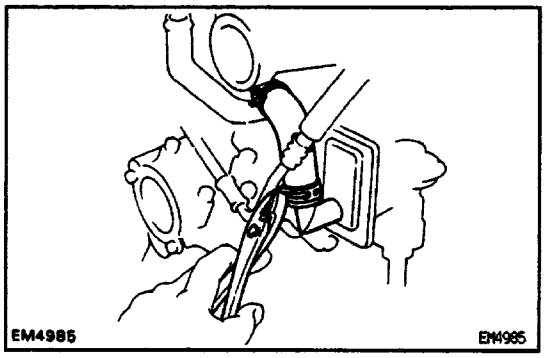

(m) Disconnect the No.1 air hose from the PAIR reed valve.

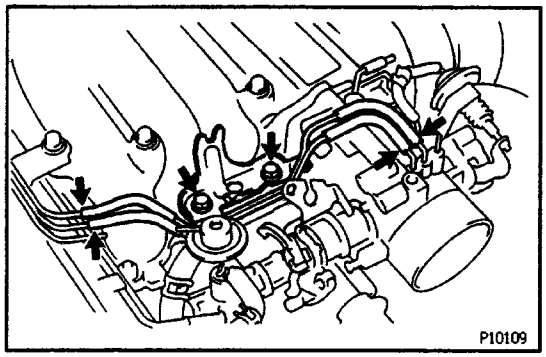

(n) Disconnect the 4 vacuum hoses from the air pipes.
(o) Remove the 2 bolts and accelerator cable bracket.

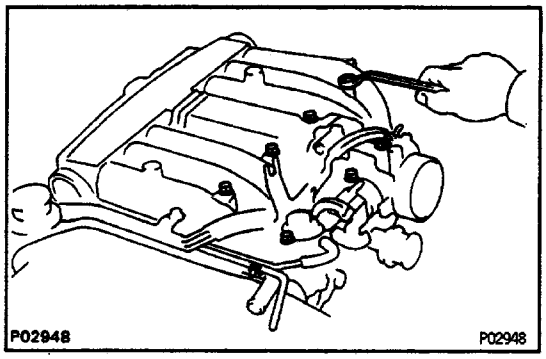

(p) Remove the 6 bolts, 2 nuts, intake chamber and gasket.

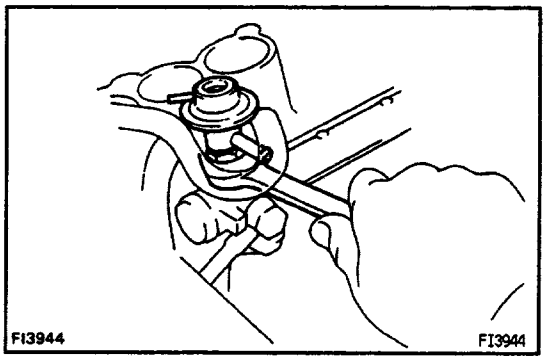

7. REMOVE FUEL PRESSURE REGULATOR

Loosen the lock nut, and remove the fuel pressure regulator.

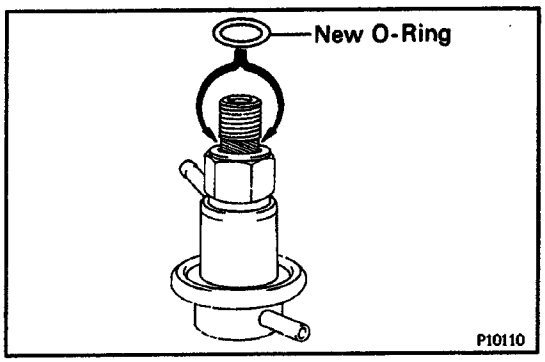

FUEL PRESSURE REGULATOR INSTALLATION

(See Components for Removal and Installation)

1. INSTALL FUEL PRESSURE REGULATOR

(a) Fully loosen the lock nut of the fuel pressure regulator.

(b) Apply a light coat of gasoline to a new O–ring and install it to the fuel pressure regulator.

(c) Thrust the fuel pressure regulator completely into the delivery pipe by hand.

(d) Turn the fuel pressure regulator counterclockwise until the outlet faces in the direction indicated in the illustration.

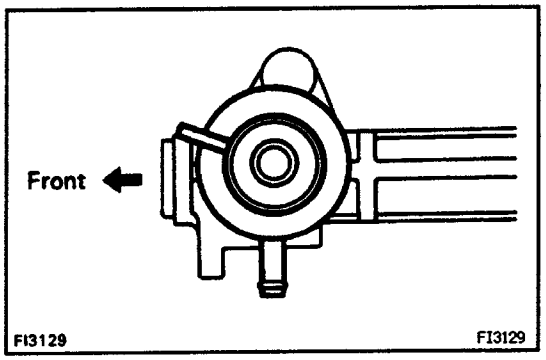

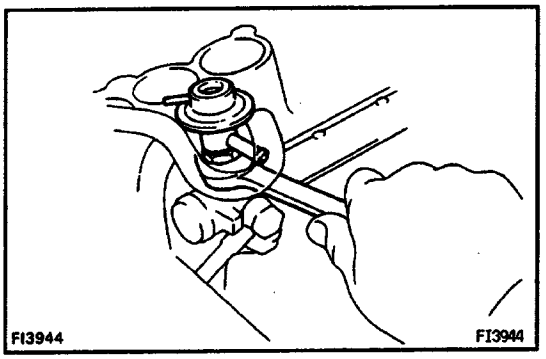

(e) Torque the lock nut.

Torque: 29 N–m (300 kgf–cm, 22 ft–lbf)

2. INSTALL AIR INTAKE CHAMBER

(a) Position a new gasket on the intake manifold.

(b) Install the intake chamber with the 6 bolts and 2 nuts.

Torque: 18 N–m (185 kgf–cm, 13 ft–lbf)

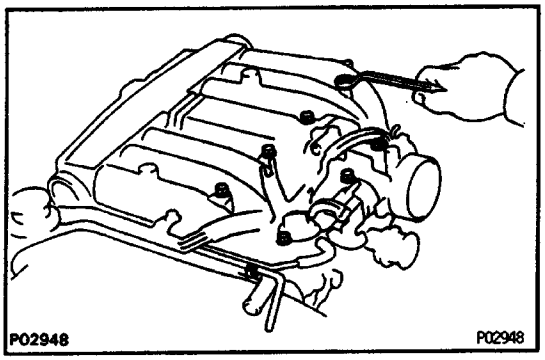

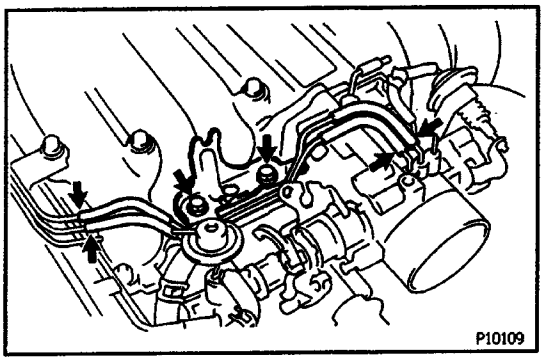

(c) Install the accelerator cable bracket with the 2 bolts.

(d) Connect the 4 vacuum hoses to the air pipes.

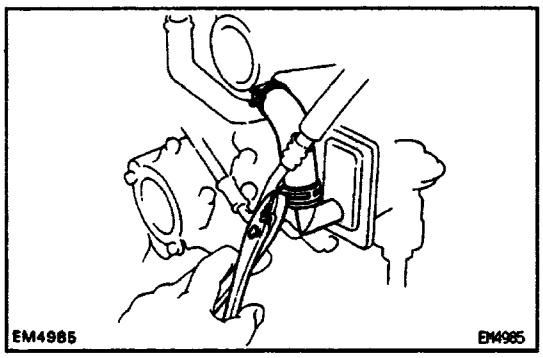

(s) Connect the No. 1 air hose to the reed valve.

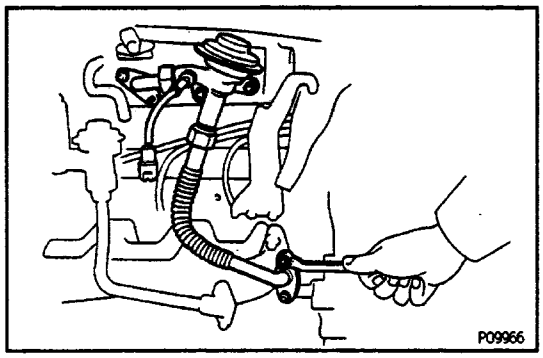

(f) Position 2 new gaskets to the intake chamber and RH exhaust manifold.
(g) Install the EGR valve with the pipes to the intake chamber and RH exhaust manifold.

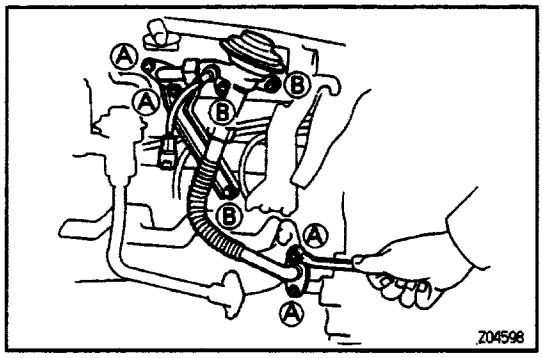

(h) Install the air intake chamber stay and throttle cable bracket. Install and torque the 6 nuts and 2 bolts.
Torque:
(A): 29 N–m (300 kgf–cm. 22 ft–lbf)
(B): 18 N–m (185 kgf–cm, 13 ft–lbf)
(i) Connect the EGR hoses to the air pipe and EGR vacuum modulator.
(j) Connect the EGR gas temp. sensor connector.
(k) Connect the vacuum hose to the gas filter.
(1) Connect the cold start injector tube with new a gasket and the union bolt.
Torque: 15 N–m (150 kgf–cm, 13 ft–lbf)
(m) Connect the cold start injector connector.

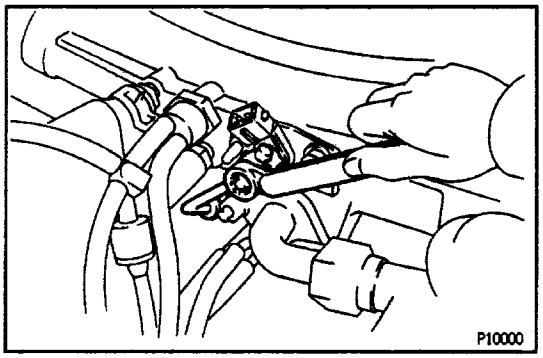

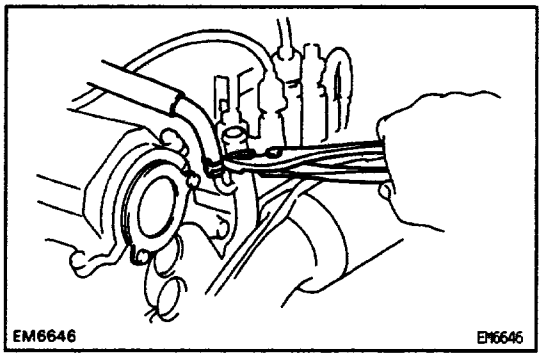

(n) Install the No.5 water bypass hose to the water bypass pipe.

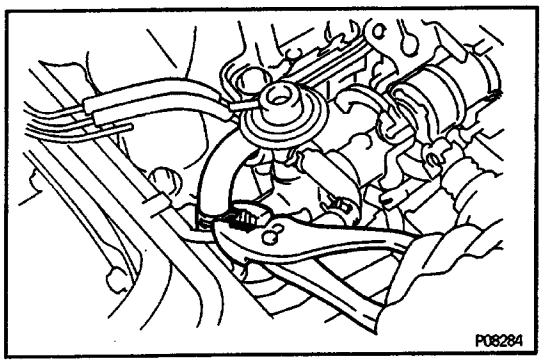

(o) Connect the No.4 water bypass hose to the union of the intake manifold.

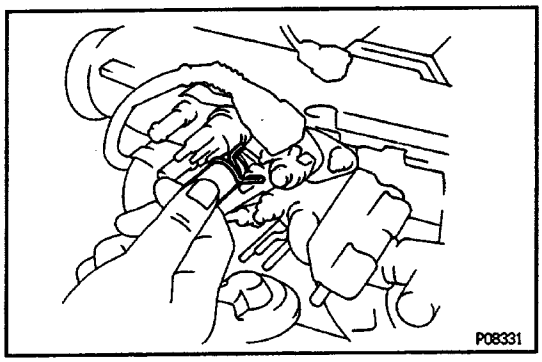

(p) Connect the PCV hose to the union.
(q) Connect the canister vacuum hose to the throttle body.
(r) Connect the throttle position sensor connector.

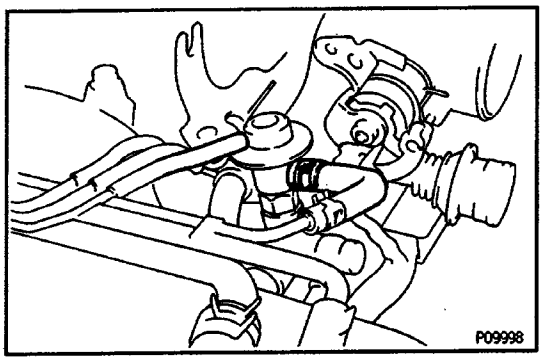

3. CONNECT FUEL RETURN HOSE
4. CONNECT VACUUM SENSING HOSE
5. CONNECT AIR CLEANER HOSE

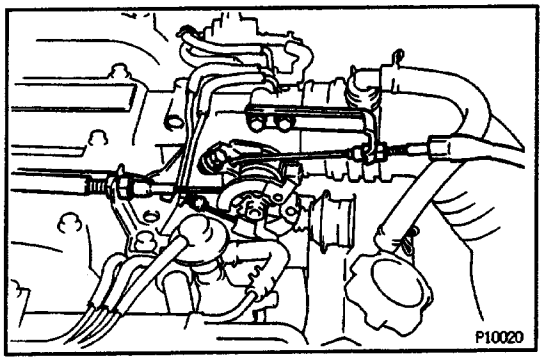

6. CONNECT THESE CABLES:
(a) A/T:
Throttle cable
(b) Accelerator cable
(c) w/ Cruise control:
Actuator cable with bracket
7. REFILL WITH ENGINE COOLANT

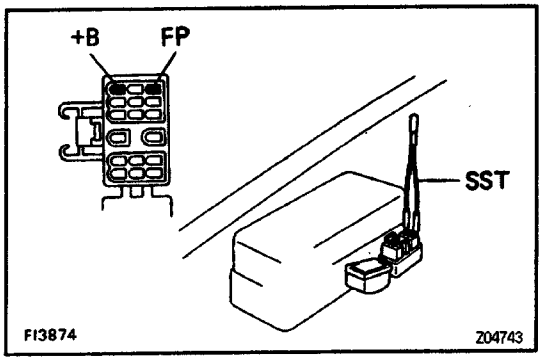

8. CHECK FOR FUEL LEAKAGE
(a) With the ignition switch ON, use SST to connect terminals FP and +B of the DLC1.
SST 09843–18020
(b) Check for fuel leakage. .
(c) Remove SST from the DLC1.

FUEL PUMP

SYSTEM CIRCUIT

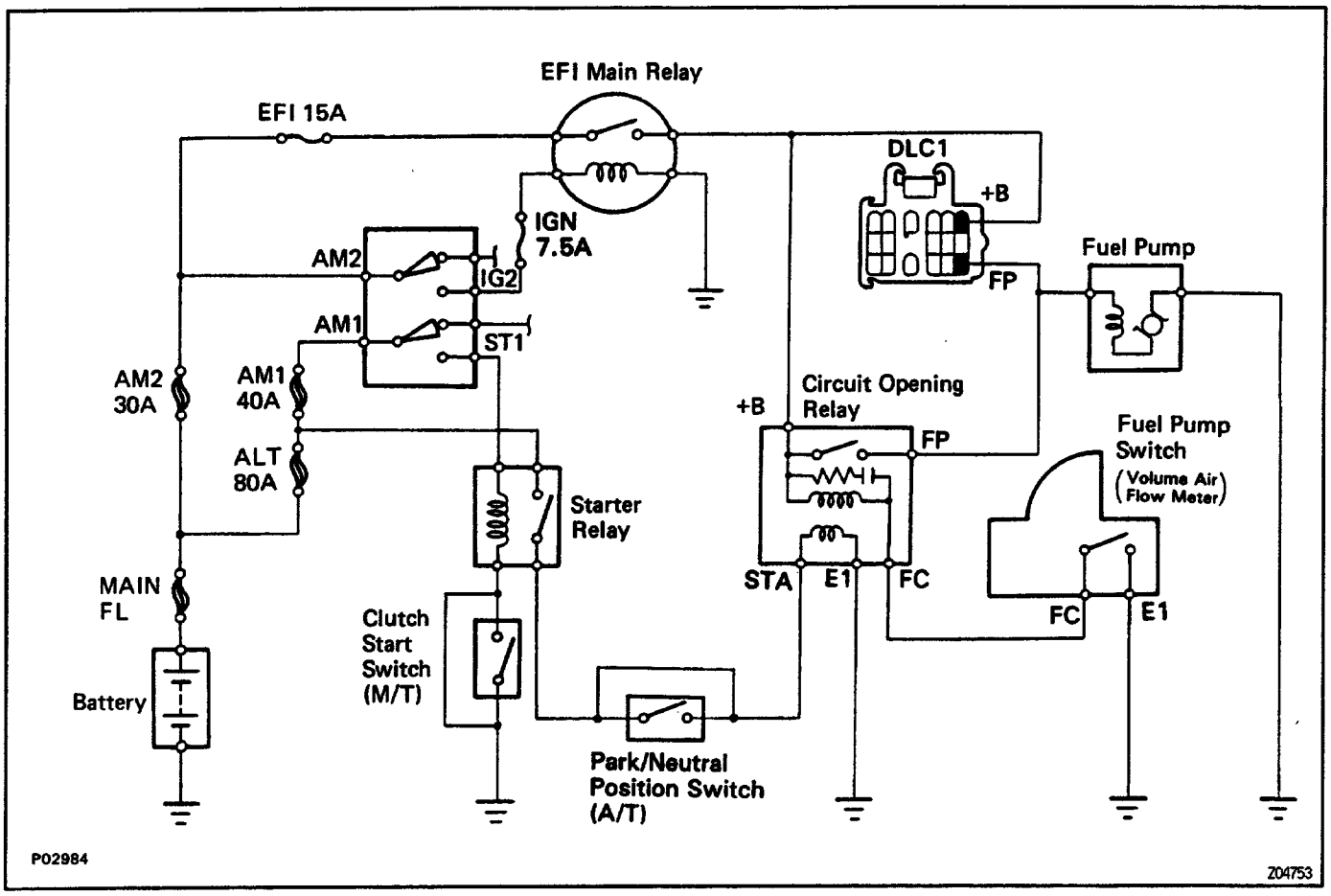

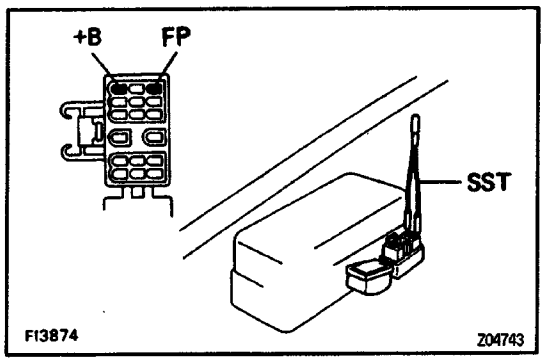

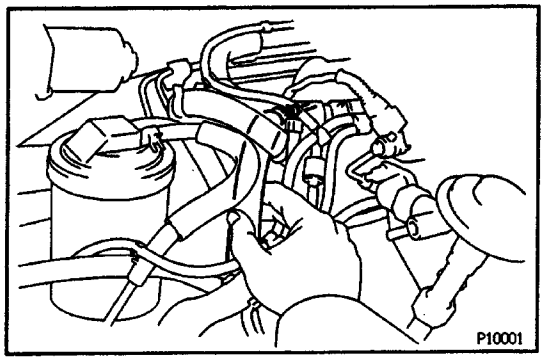

ON–VEHICLE INSPECTION

1. CHECK FUEL PUMP OPERATION

(a) Turn the ignition switch ON.

HINT: Do not start the engine.

(b) Using SST, connect terminals FP and +B of the DLC 1.

SST 08843–18020

HINT: The DLC1 is located near the No.2 relay block.

(c) Check that there is pressure in the fuel inlet hose.

HINT: At this time, you will hear fuel return noise from the fuel return hose.

(d) Remove SST from the DLC1.
SST 09843–18020
(e) Turn the ignition switch OFF.
If there is no pressure, check these parts:

- Fusible link
- Fuses (EFI 15A, IGN 7.5A)
- EFI main relay
- Circuit opening relay
- Fuel pump
- Wiring connections

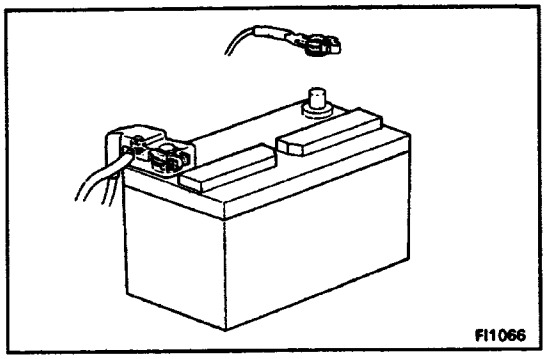

2. CHECK FUEL PRESSURE

(a) Check that the battery voltage is above 12 V.
(b) Disconnect the negative (–) terminal cable from the battery.

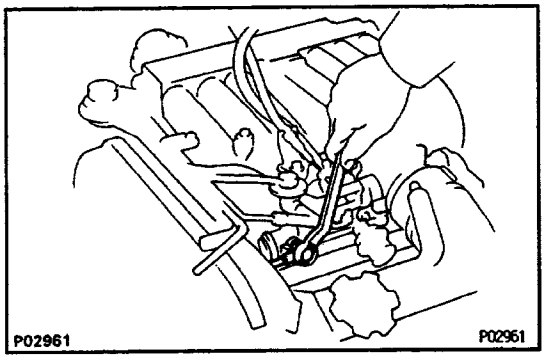

(c) Place a suitable container or shop rag under the LH delivery pipe.
(d) Slowly loosen the union bolt of the No.3 fuel pipe and remove the union bolt and 2 gaskets from the delivery pipe.
(e) Drain fuel in the LH delivery pipe.

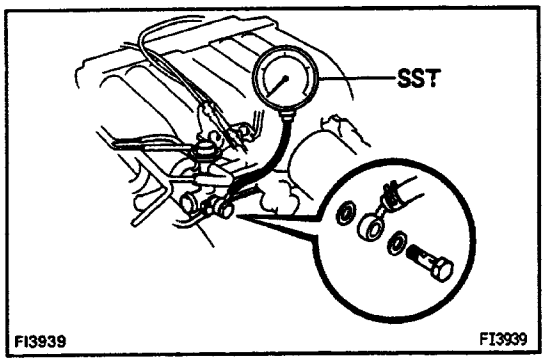

(f) Install the No.3 fuel pipe and SST (pressure gauge) to the LH delivery pipe with 3 new gaskets and SST (union bolt) as shown in the illustration.
SST 09268–45012
Torque: 34 N–m (350 kgf–cm, 25 ft–lbf)
(g) Wipe oft any splattered gasoline.
(h) Reconnect the negative (–) terminal cable from the battery.

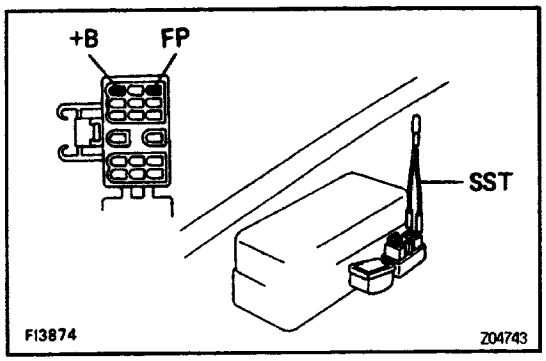

(i) Using SST, connect terminals FP and +B of the DLC1.
SST 09843–18020
(j) Turn the ignition switch ON.

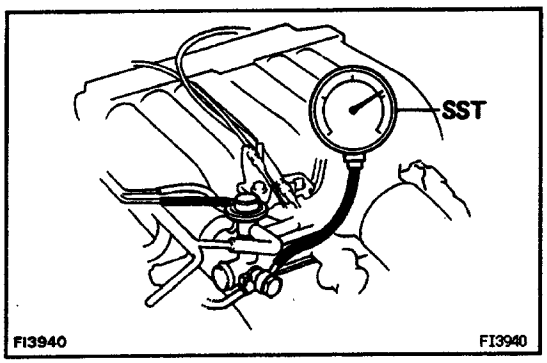

(k) Measure the fuel pressure.

Fuel pressure:

265 – 304 kPa (2.7 – 3.1 kgf/cm2, 38 – 44 psi)

If pressure is high, replace the fuel pressure regulator.

If pressure is low, check these parts:

- Fuel hoses and connections
- Fuel pump
  Fuel filter
- Fuel pressure regulator

(l) Remove SST from the DLC1.

SST 09843–18020

(m) Start the engine.

(n) Disconnect the vacuum hose from the fuel pressure regulator and plug it closed.

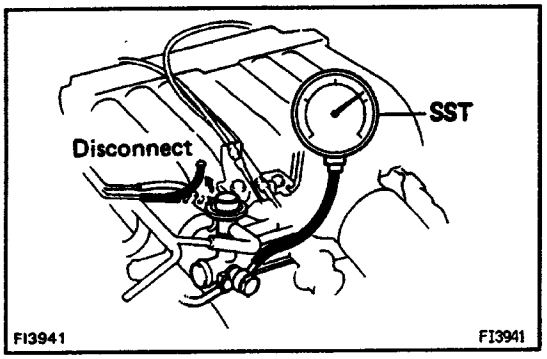

(o) Measure the fuel pressure at idling.

Fuel pressure:

265 – 304 kPa (2.7 – 3.1 kgf/cm2, 38 – 44 psi)

(P) Reconnect the vacuum hose to the fuel pressure regulator.

(q) Measure the fuel pressure at idling.

Fuel pressure:

226 – 255 kPa (2.3 – 2.6 kgf/cm2, 33 – 37 psi)

If not within the specified pressure, check the vacuum hose and fuel pressure regulator.

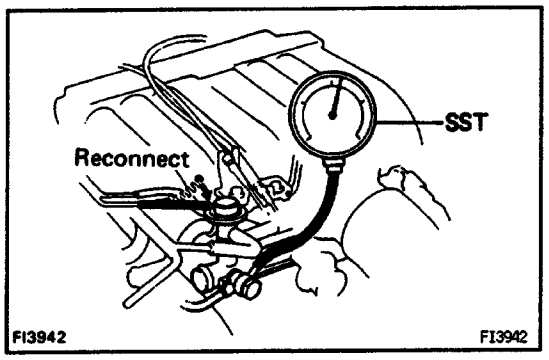

(r) Stop the engine. Check that the fuel pressure remains above 147 kPa (1.5 kgf/cm2, 21 psi) for 5 minutes after the engine is turned off.

If not within specification, check the fuel pump, fuel pressure regulator and/or injectors.

(s) After checking fuel pressure, disconnect the negative (–) terminal cable from the battery and carefully remove the SST to prevent gasoline from splashing.

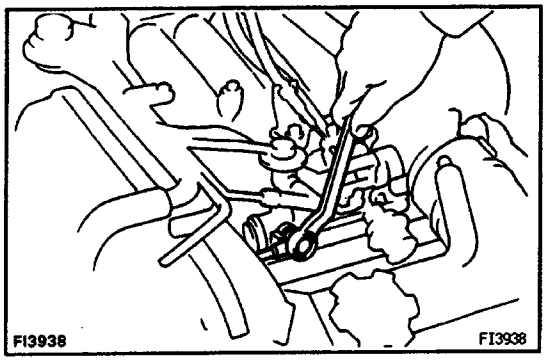

(t) Using 2 new gaskets, reconnect the No.3 fuel pipe to the delivery pipe.

Torque: 34 N–m (350 kgf–cm, 25 ft–lbf)

(u) Reconnect the negative (–) terminal cable to the battery.

(v) Start the engine and check for fuel leakage.

COMPONENTS FOR REMOVAL AND INSTALLATION

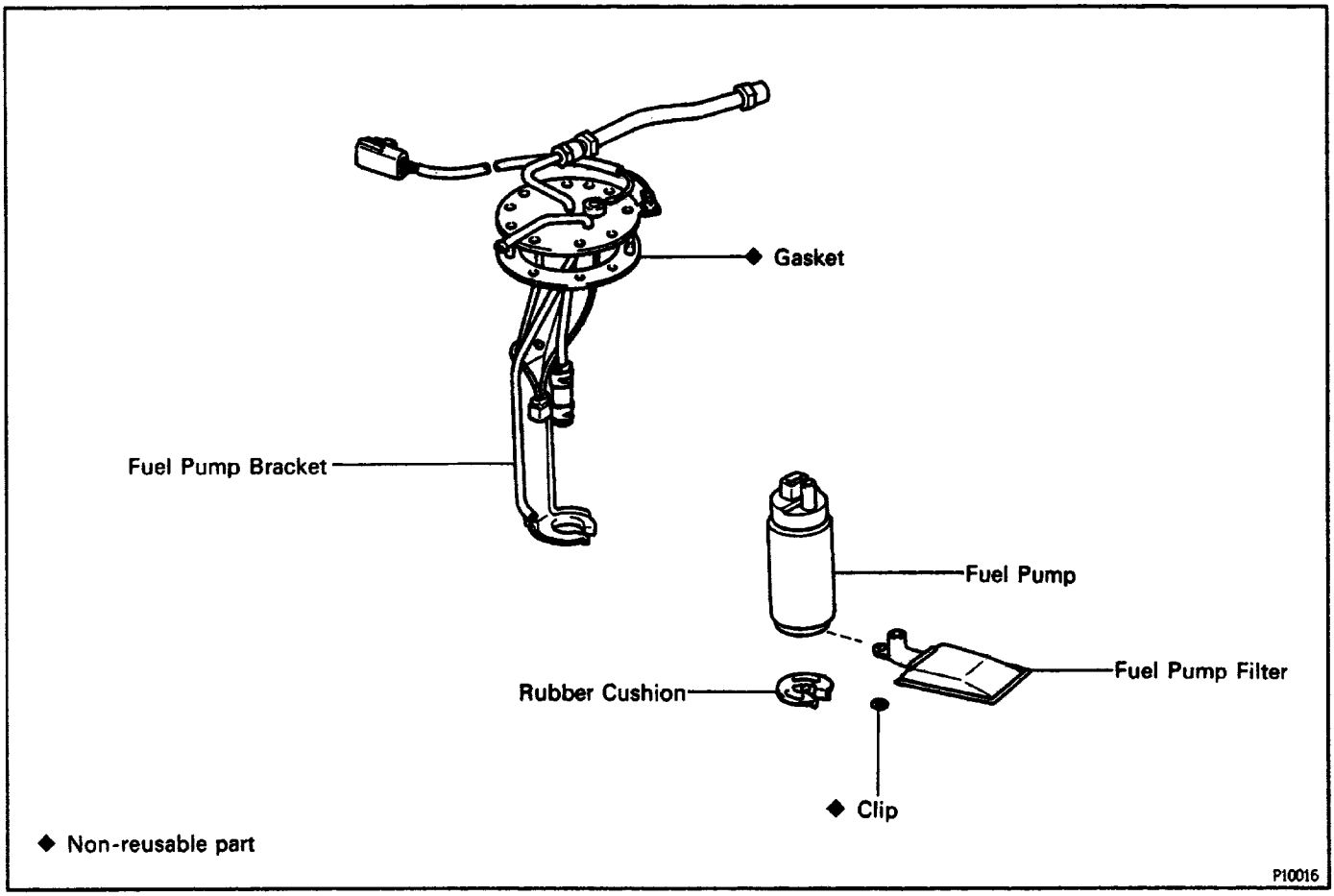

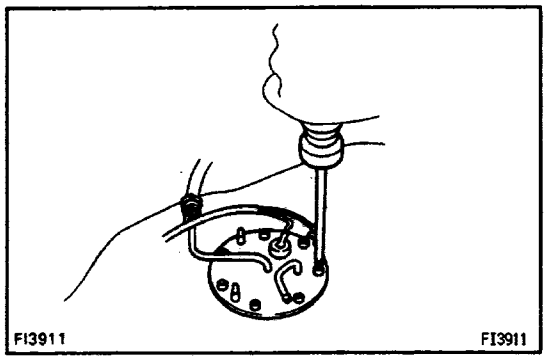

FUEL PUMP REMOVAL

1. DRAIN FUEL FROM FUEL TANK

CAUTION: Do not smoke or work near an open flame when working on the fuel ,pump.

2. REMOVE FUEL TANK

3. REMOVE FUEL PUMP BRACKET

(a) Remove the 7 bolts.

(b) Pull out the fuel pump bracket.

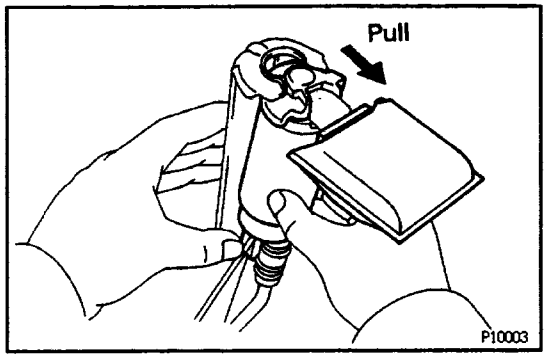

4. REMOVE FUEL PUMP FROM FUEL PUMP BRACKET

(a) Pull oft the lower side of the fuel pump from the pump bracket.

(b) Disconnect the fuel pump connector.

(c) Disconnect the fuel hose from the fuel pump, and remove the fuel pump.

(d) Remove the rubber cushion from the fuel pump.

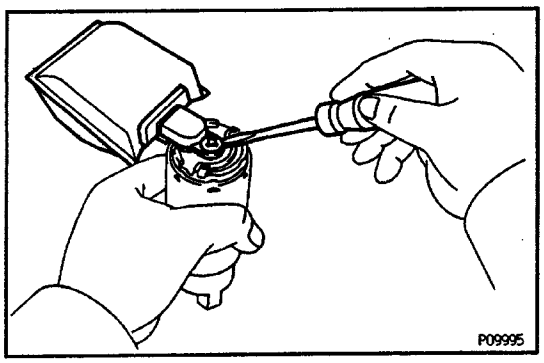

5. REMOVE FUEL PUMP FILTER FROM FUEL PUMP

(a) Using a small screwdriver, remove the clip.

(b) Pull out the pump filter.

FUEL PUMP INSTALLATION

(See Components for Removal and Installation)

1. INSTALL FUEL PUMP FILTER TO FUEL PUMP

Install the pump filter with a new clip.

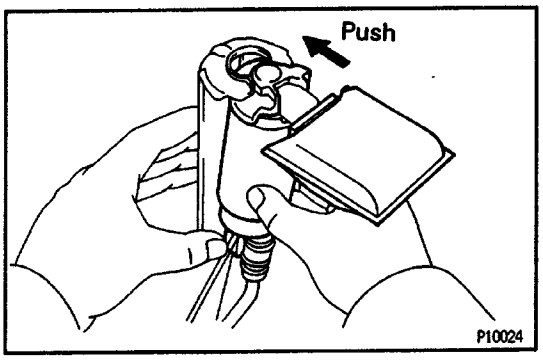

2. INSTALL FUEL PUMP TO FUEL PUMP BRACKET

(a) install the rubber cushion to the fuel pump.

(b) Connect the fuel hose to the outlet port of the fuel pump.

(c) Install the fuel pump connector.

(d) Install the fuel pump by pushing the lower side of the fuel pump.

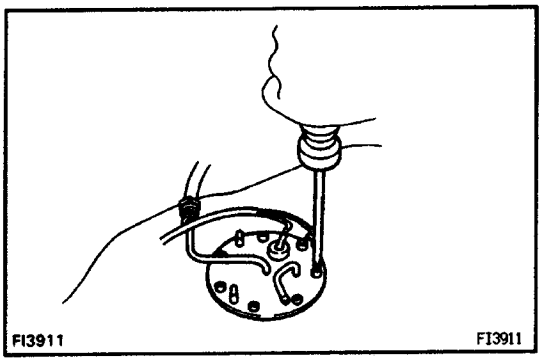

3. INSTALL FUEL PUMP BRACKET

(a) Place the bracket with a new gasket on the fuel tank.

(b) Install and tighten the 7 bolts.

Torque: 3.9 N–m (40 kgf–cm, 34 in.–lbf)

4. INSTALL FUEL TANK

NOTICE:

- **Tighten the pipe and flare nut type hose to the specified torque.**
- **Push in the pipe and insert–type hose to the specified position, and install the clip to the specified location.**
- **If rousing the hose, reinstall the clip at the original location.**

5. REFILL WITH FUEL

FUEL TANK AND LINE

COMPONENTS FOR REMOVAL AND INSTALLATION

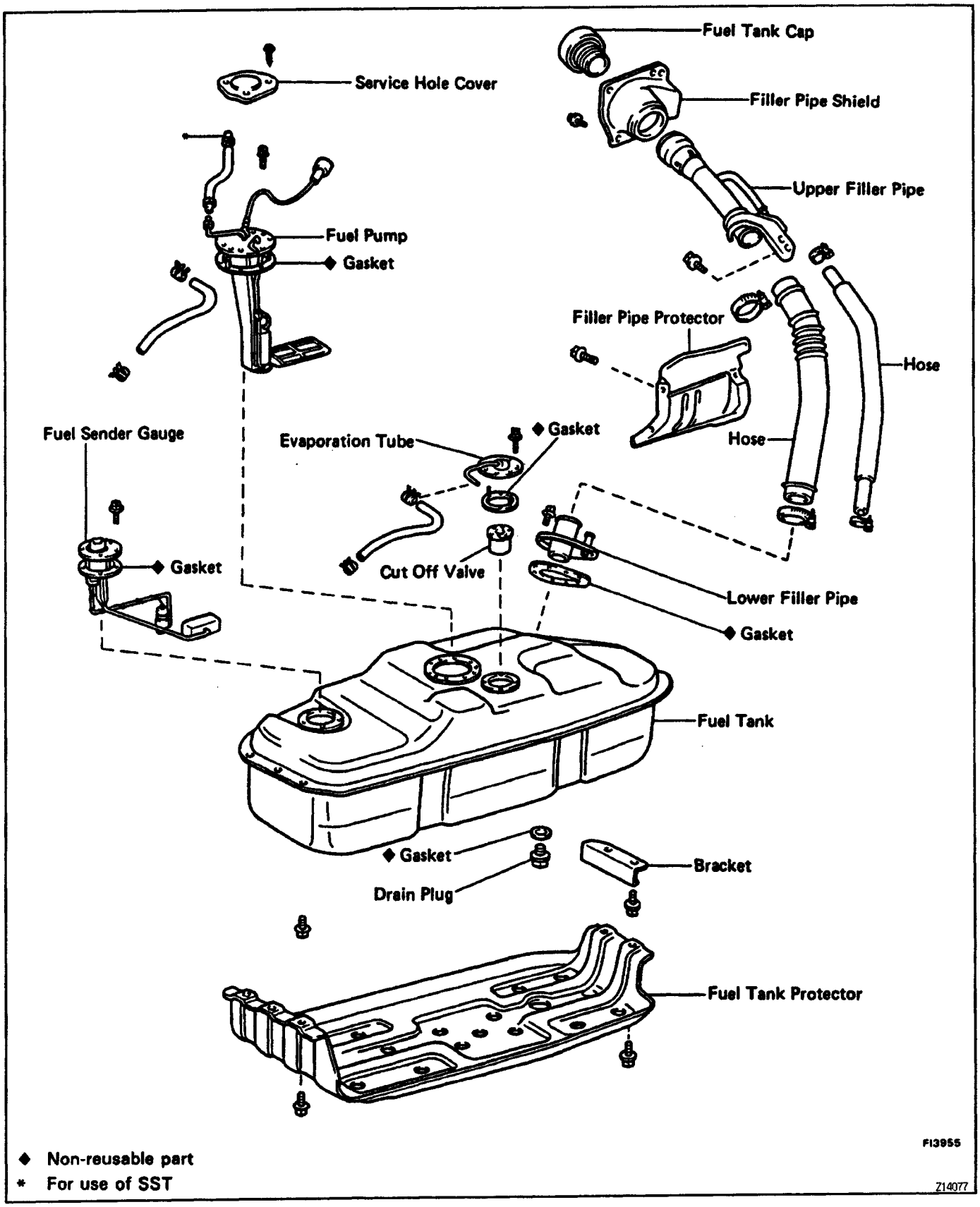

PRECAUTIONS

1. Always use new gaskets when replacing the fuel tank or component part.

2. Apply the proper torque to all parts to be tightened.

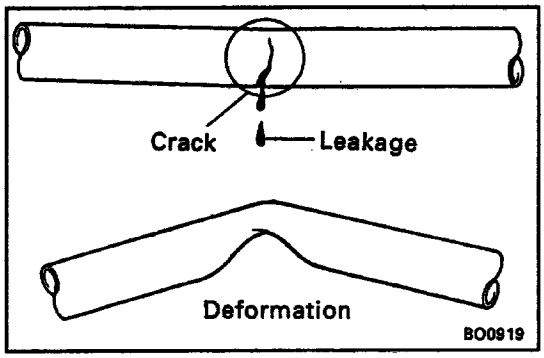

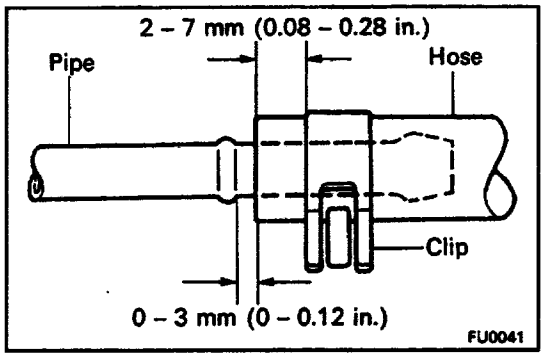

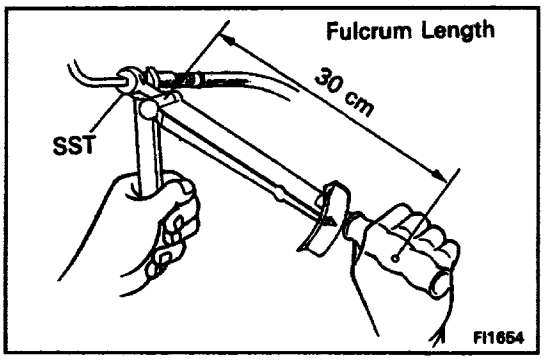

FUEL LINES AND CONNECTIONS INSPECTION

(a) Inspect the fuel lines for cracks or leakage, and all connections for deformations.

(b) Inspect the fuel tank vapor vent system hoses and connections for looseness, sharp bends or damage.

(c) Inspect the fuel tank for deformations, cracks or fuel leakage.

(d) Inspect the filler neck for damage or fuel leakage.

(e) Hose and tube connections are as shown in the illustration. If a problem is found, repair or replace the parts as necessary.

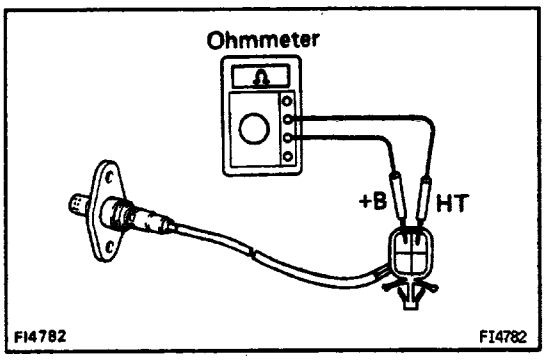

HEATED OXYGEN SENSOR

HEATED OXYGEN SENSOR INSPECTION

1. INSPECT HEATER RESISTANCE OF HEATED OXYGEN SENSOR

Using an ohmmeter, measure the resistance between the terminals +B and HT.

Resistance:

At 20°C (68° F): 5 – 7Ω

If the resistance is not as specified, replace the heated oxygen sensor.

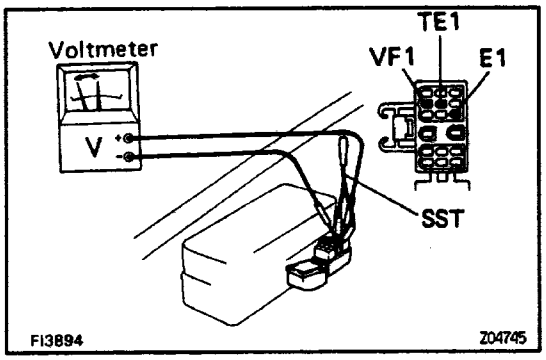

2. INSPECTION OF FEEDBACK VOLTAGE (VF1)

(a) Warm up the engine.

(b) Connect the voltmeter to the DLC1 terminals VF1 and E1.

HINT: Use SST when connecting between terminals TE1 and E1 of the DLC1.

SST 09843–18020

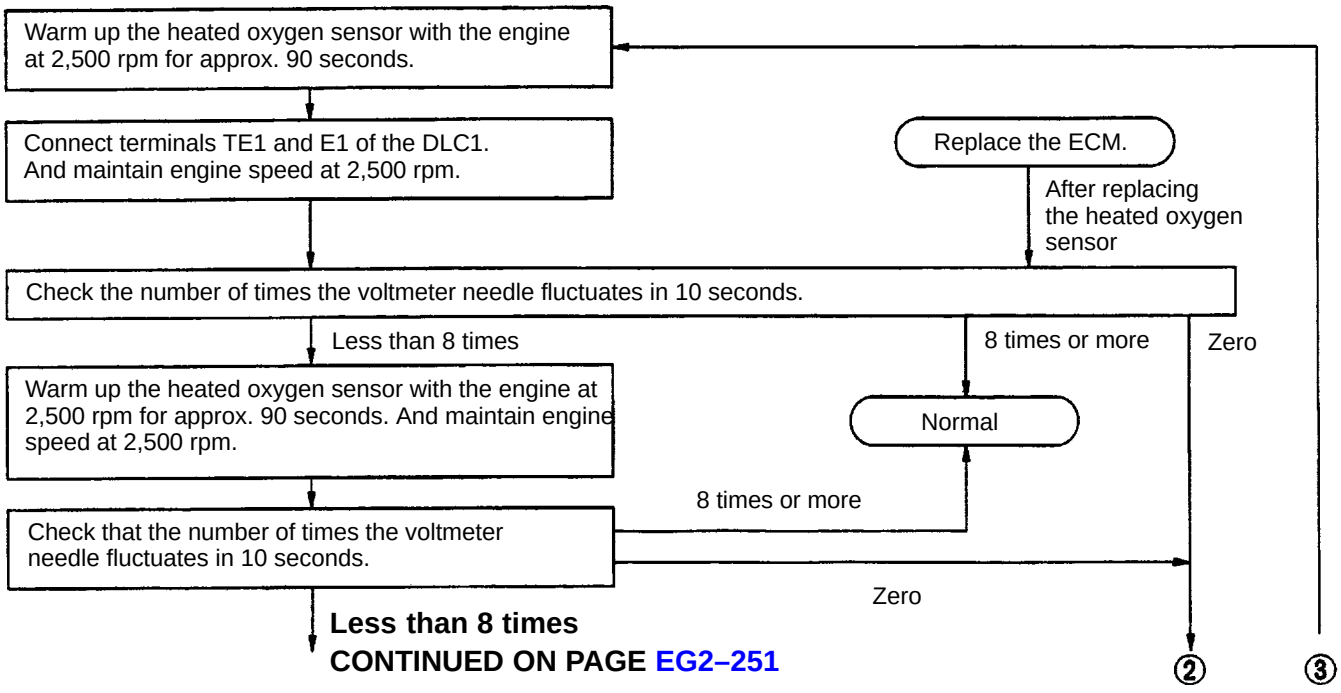

CONTINUED FROM PAGE EG2–250

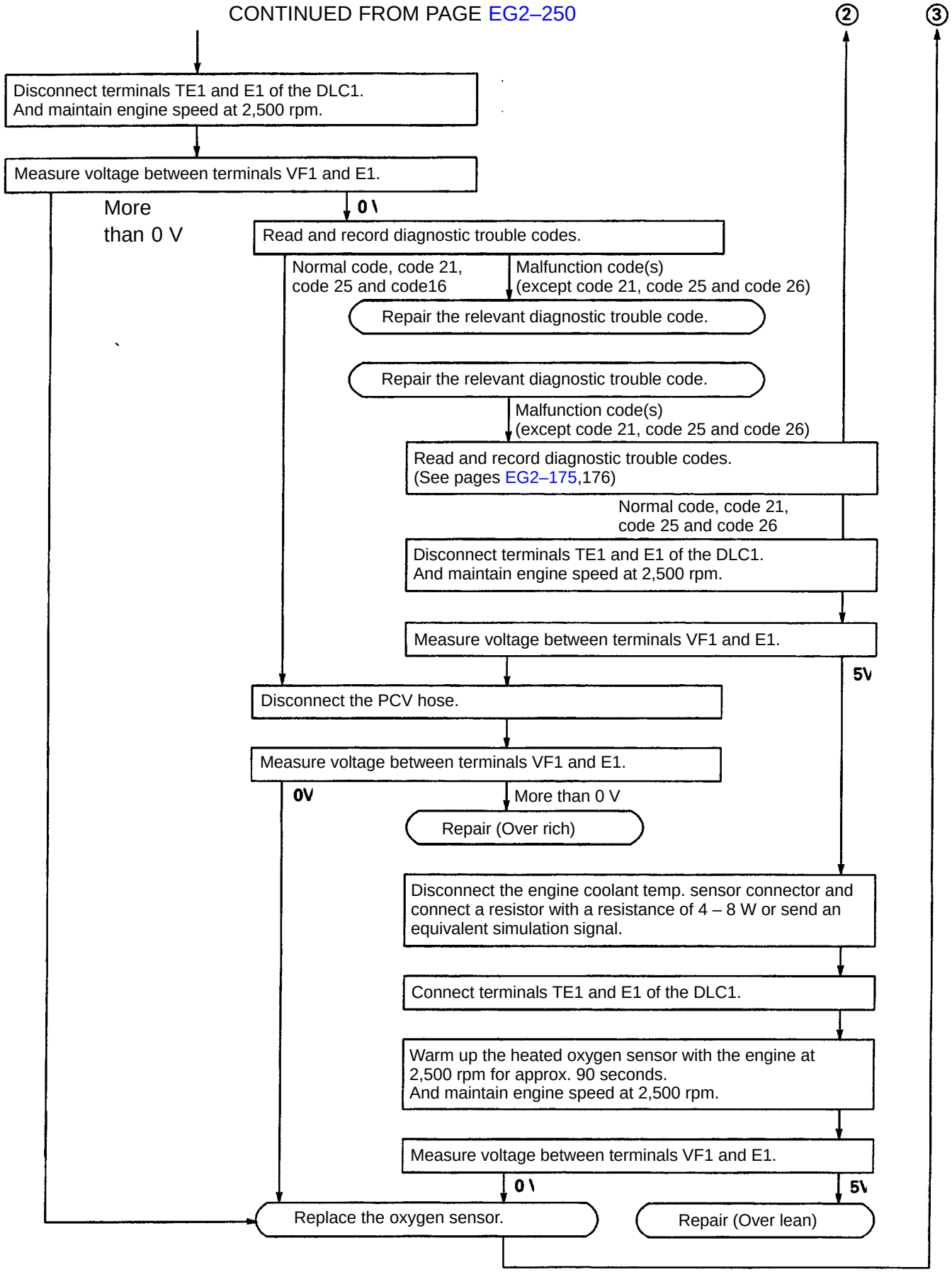

INJECTOR

COMPONENTS FOR REMOVAL AND INSTALLATION

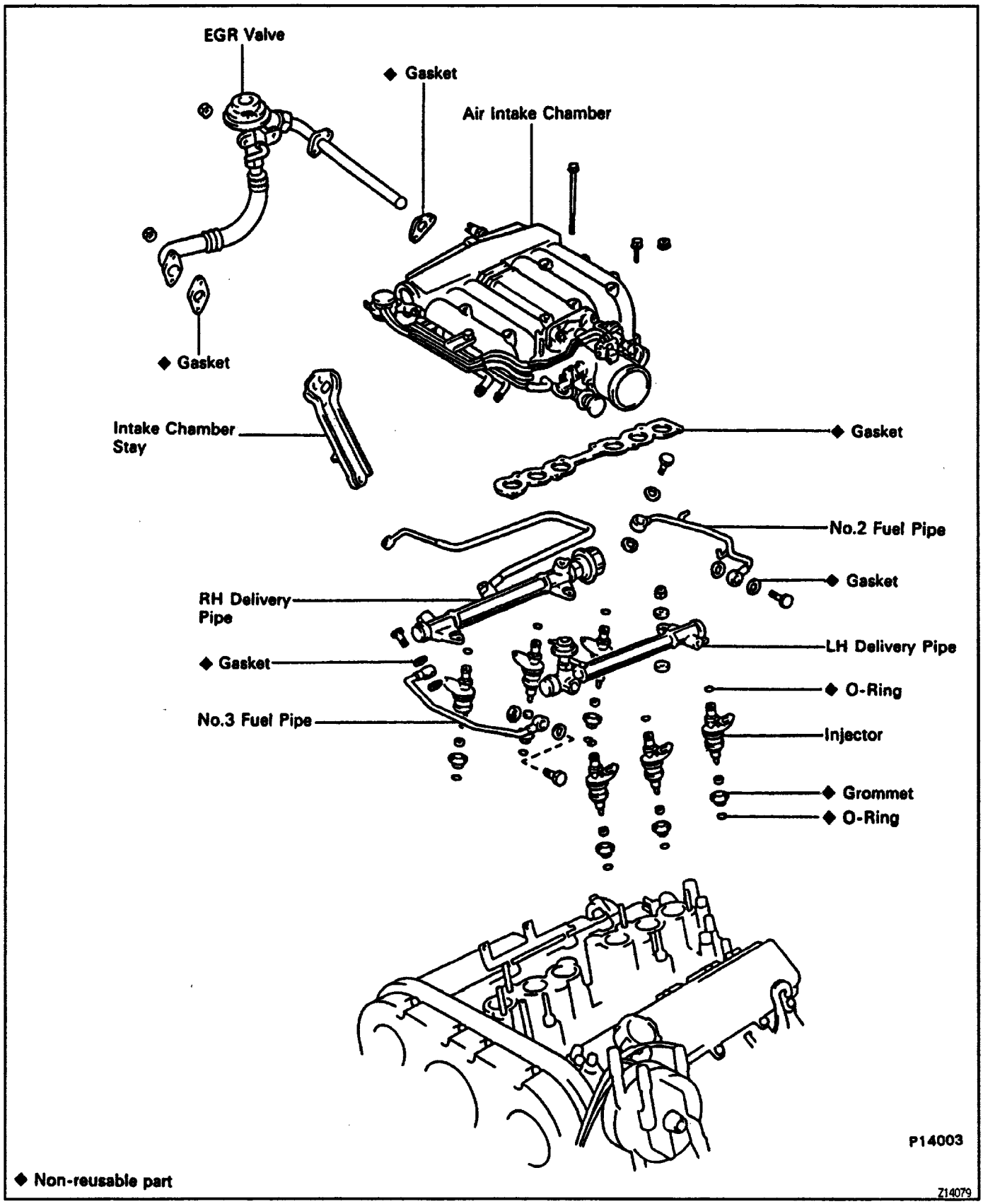

INJECTORS REMOVAL

(See Components for Removal and Installation)

1. DRAIN ENGINE COOLANT

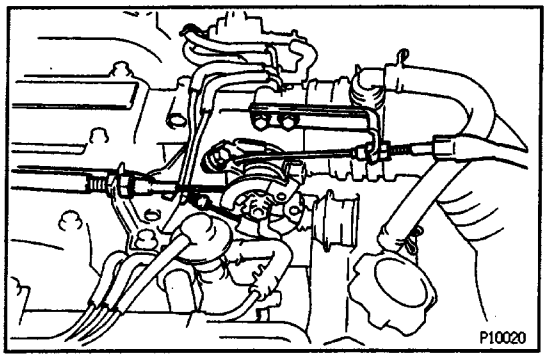

2. DISCONNECT THESE CABLES:

(a) w/ Cruise control:
Actuator cable with bracket

(b) Accelerator cable

(c) A/T:
Throttle cable

3. DISCONNECT AIR CLEANER HOSE

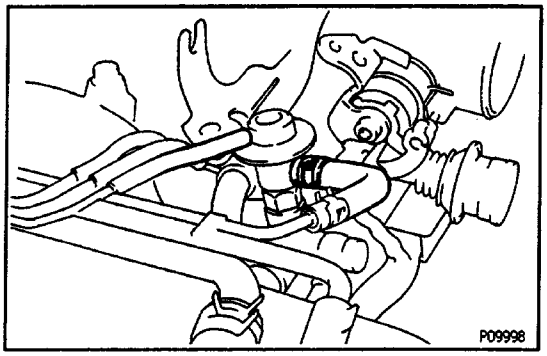

4. DISCONNECT VACUUM SENSING HOSE

5. DISCONNECT FUEL RETURN HOSE

(a) Place a suitable container or shop towel under the fuel pressure regulator.

(b) Disconnect the fuel return hose from the fuel pressure regulator.

6. REMOVE AIR INTAKE CHAMBER

(a) Disconnect the throttle position sensor connector.

(b) Disconnect the canister vacuum hose from the throttle body.

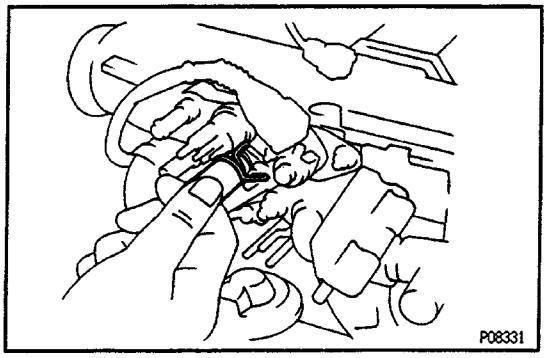

(c) Disconnect the PCV hose from the union.

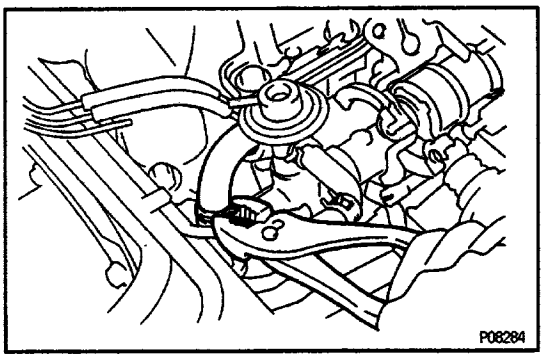

(d) Disconnect the No.4 water bypass hose from the union of the intake manifold.

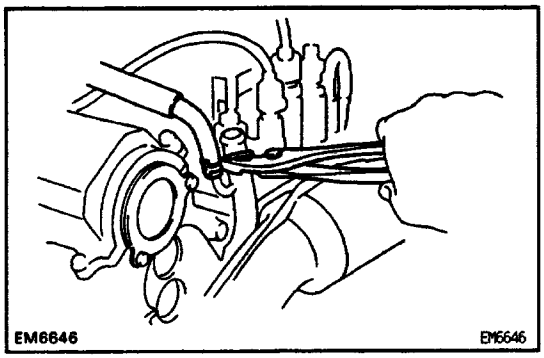

(e) Disconnect the No.5 water bypass hose from the water bypass pipe.

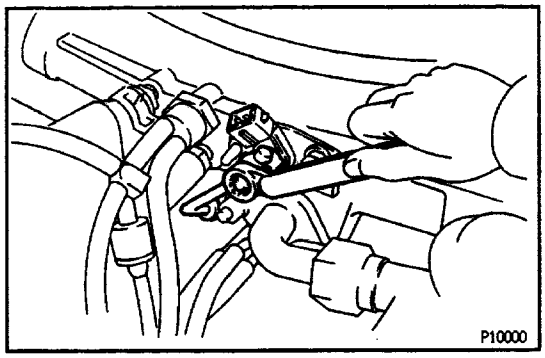

(f) Disconnect the cold start injector connector.
(g) Disconnect the vacuum hose from the gas filter.
(h) Remove the union bolt. 2 gaskets and cold start injector tube.

(i) Disconnect the EGR gas temperature connector.
(j) Disconnect the EGR vacuum hoses from the air pipe and EGR vacuum modulator.

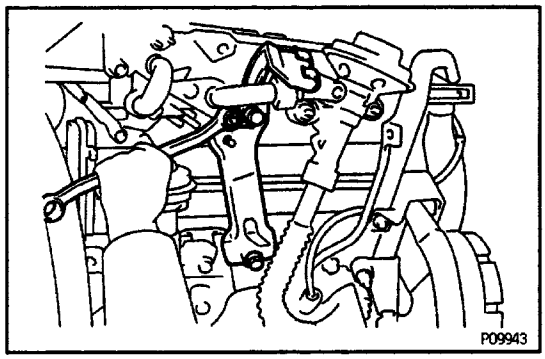

(k) Remove the nut, 2 bolts, intake chamber stay and throttle cable bracket.

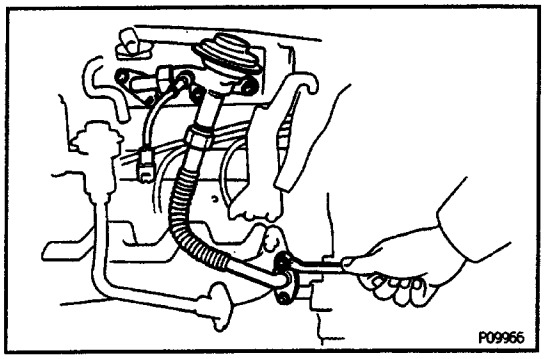

(l) Remove the 5 nuts, EGR valve with the pipes and 2 gaskets.

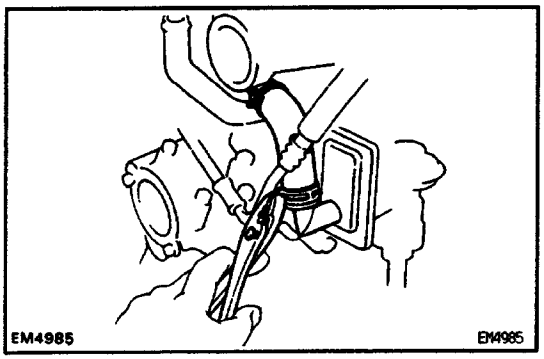

(m) Disconnect the No.1 air hose from the PAIR reed valve.

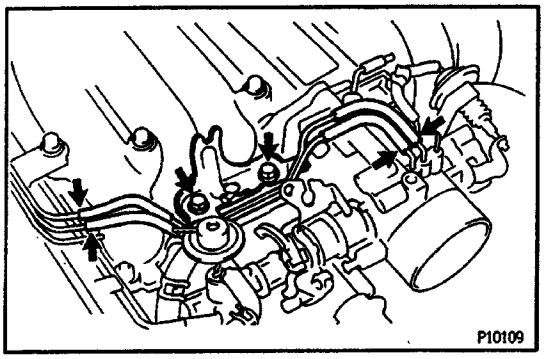

(n) Disconnect the 4 vacuum hoses from air pipes.
(o) Remove the 2 bolts and accelerator cable bracket.

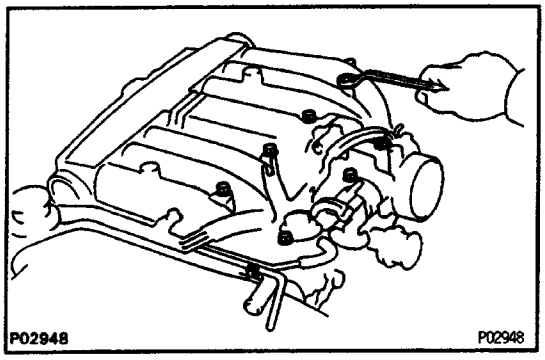

(p) Remove the 6 bolts, 2 nuts, intake chamber and gasket.

7. REMOVE ENGINE WIRE

(a) Disconnect these connectors:

- Knock sensor connector
- Cold start injector time switch connector
- Engine coolant temperature sensor connector
- Engine coolant temperature sender gauge connector
- RH ground strap from No.3 camshaft bearing cap
- Injector connectors

(b) Remove 2 bolts and engine wire.

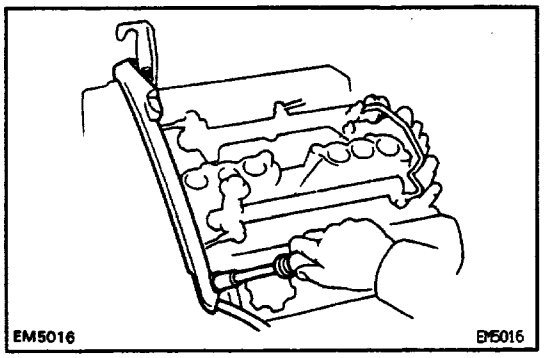

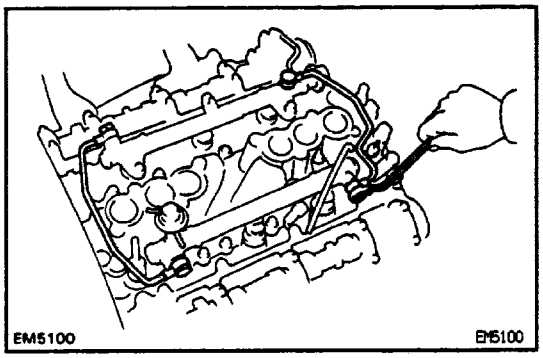

8. REMOVE NO.2 AND NO–3 FUEL PIPES

Remove the 4 union bolts, No.2, No.3 fuel pipes and 8 gaskets.

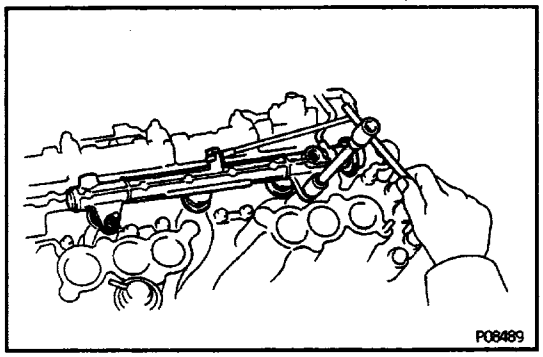

9. REMOVE DELIVERY PIPES AND INJECTORS

(a) Remove the 4 nuts holding the delivery pipes to the intake manifold.

(b) Remove the the 2 delivery pipes and 6 injectors assemblies.

NOTICE: Be careful not to drop the injectors when removing the delivery pipes.

(c) Remove the 4 insulators, 10 spacers and 4 O–rings from the cylinder head.

(d) Pull out the 6 injectors from the delivery pipes.

(e) Remove the O –ring and grommet from each injector.

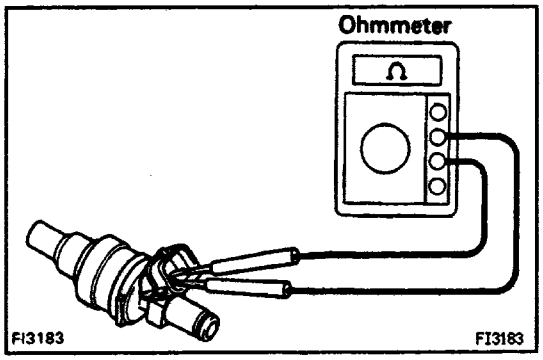

INJECTORS INSPECTION

1. MEASURE RESISTANCE OF INJECTOR

Using an ohmmeter, check the resistance of both terminals.

Resistance:

13.4–14.2Ω

2. TEST INJECTION OF INJECTOR

CAUTION: Keep injectors clear of sparks during the test.

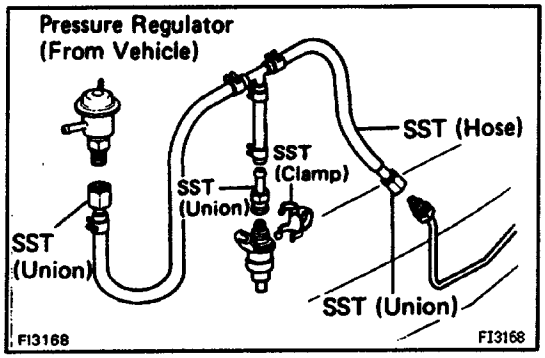

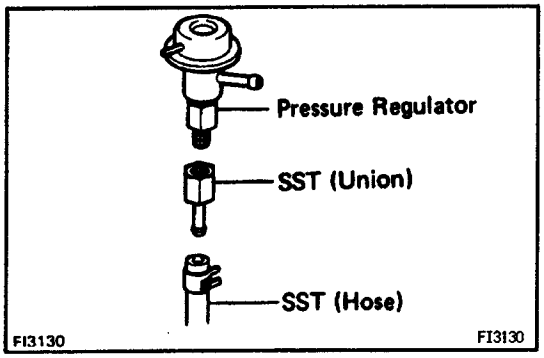

(a) Disconnect the No. 1 fuel hose from the fuel tube.
(b) Connect SST (hose and union) to the fuel tube.
SST 09268–41045 (09268–52010)
(c) Remove the fuel pressure regulator.
(d) Connect SST (hose) to the fuel pressure regulator with SST (union).
SST 09268–41045 (09268–52010)

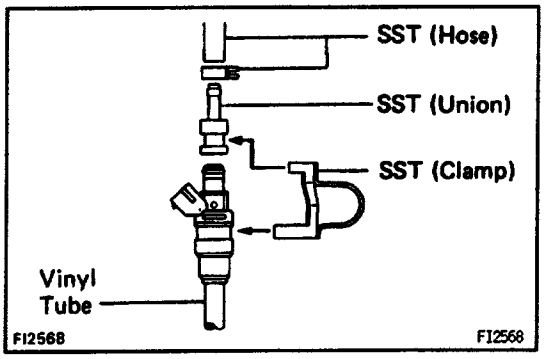

(e) Install SST (union) to the injector and hold the injector and union with SST (clamp).
SST 09268–41045
(f) Put the injector into the graduated cylinder.
HINT: Install a suitable vinyl tube onto the injector to prevent gasoline from splashing out.
(g) Connect the negative (–) terminal cable to the battery.
(h) Turn the ignition switch ON.
HINT: Do not start the engine.
(i) Using SST, connect terminals FP and +B of the DLC1.
SST 09843–18020
HINT: Fuel pump will operate.

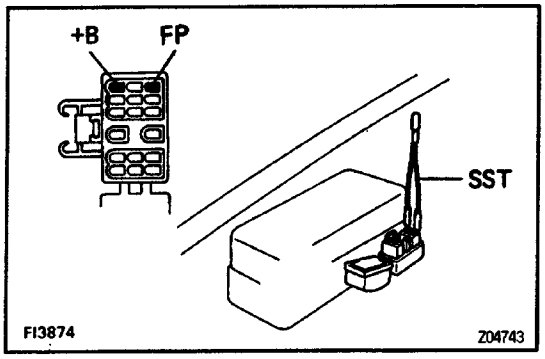

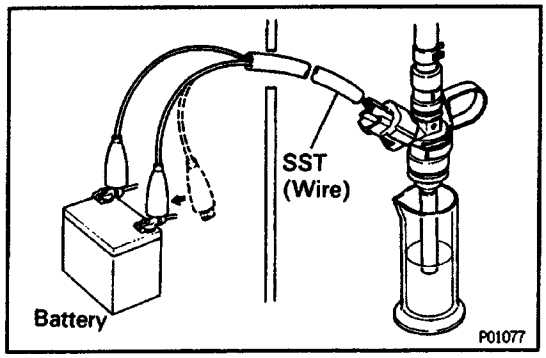

(j) Connect SST (wire) to the injector and battery for 15 seconds and measure the injection volume with a graduated cylinder. Test each injector 2 or 3 times.
SST 09842 – 30070
Volume:
45 – 55 cm2(2.7 – 3.4 cu in.) / 15 sec.
Difference between each injector:
6 cm2 (0.4 cu in.) or less
If not within specified volume, replace the injector.

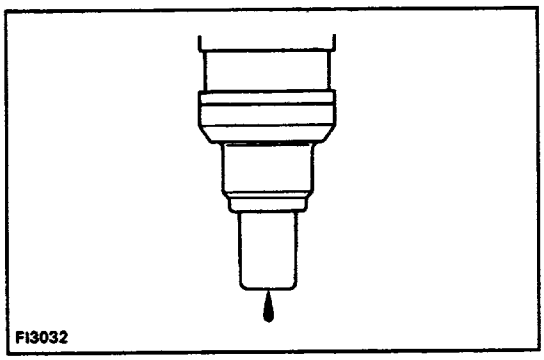

3. CHECK LEAKAGE

(a) In the condition above, disconnect SST from the battery and check for fuel leakage from the injector nozzle.
SST 09842–30070
Fuel drop:
One drop or less per minute

(b) Disconnect the negative (–) terminal cable from the battery.

(c) Remove SST.
SST 09268–41045 and 09843–18020

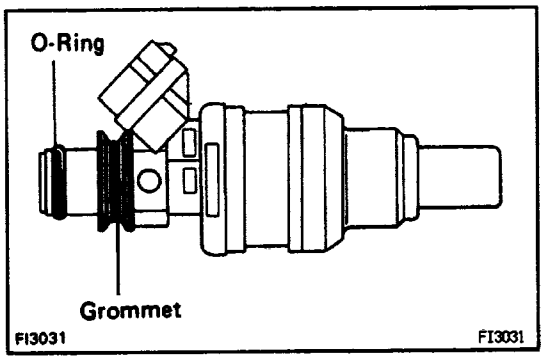

INJECTORS INSTALLATION

(See Components for Removal end Installation)

1. INSTALL INJECTORS AND DELIVERY PIPES

(a) Install a new grommet to the injector.

(b) Apply a light coat of gasoline to a new O–ring, and install it to the injector.

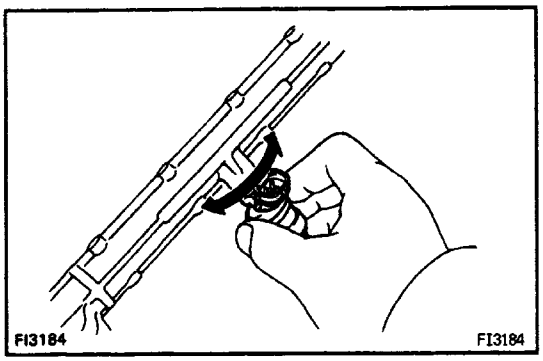

(c) While turning the injector clockwise and counter–clockwise, push it to the delivery pipe. Install the 6 injectors.

(d) Position the injector connector outward.

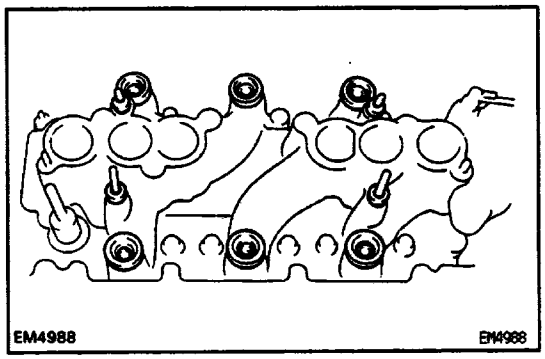

(e) Install a O–ring to the spacer.

(f) Place the 6 spacers and insulators into the injector holes.

(g) Place the 4 spacers on the stud bolts.

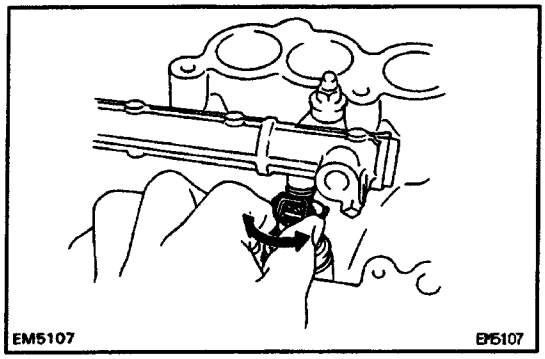

(h) Place the 2 delivery pipes together with the 6 injectors in position on the intake manifold.
(i) Temporarily install the 4 spacers and nuts. ’
0) Check that the injectors rotate smoothly.
HINT: If injectors do not rotate smoothly, the probable cause is incorrect installation of O–rings. Replace the O–rings.
(k) Position the injector connector upward.

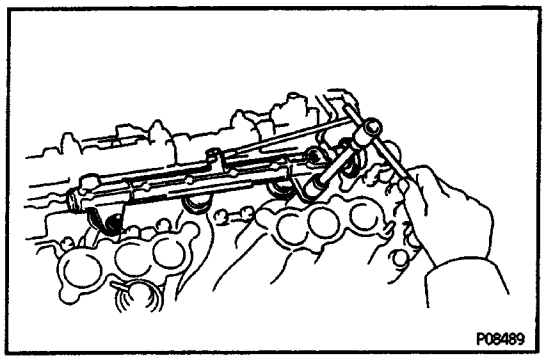

(l) Tighten the 4 nuts holding the delivery pipes to the intake manifold.
Torque: 13 N–m (130 kgf–cm, 9 ft–(lbf)
(m) Install the No. 1 fuel pipe to the No.3 bearing cap with the bolt.

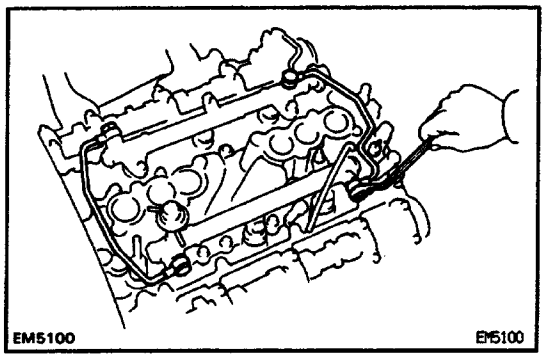

2. INSTALL NO.2 AND NO–3 FUEL PIPES
(a) Install the No.2 fuel pipe with 4 new gaskets and 2 union bolts.
Torque: 34 N–m (350 kgf–cm, 25 ft–lbf)
(b) Install the No–3 fuel pipe with 4 new gaskets and 2 union bolts.
Torque: 34 N–m (350 kgf–cm, 25 ft–lbf)

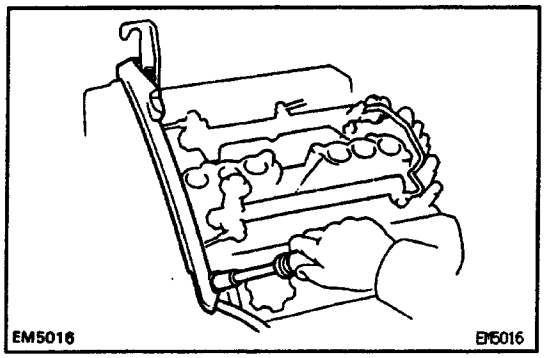

3. INSTALL ENGINE WIRE
(a) Install the engine wire with the 2 bolts.
(b) Connect these connectors:
- Injector connectors
- RH ground strap
- Engine coolant temperature sender gauge connector
- Engine coolant temperature sensor connector
- Cold start injector time switch connector
- Knock sensor connector

4. INSTALL AIR INTAKE CHAMBER
(a) Position a new gasket on the intake manifold.
(b) Install the intake chamber with the 6 bolts and 2 nuts.
Torque: 18 N–m (185 kgf–cm. 13 ft–lbf)

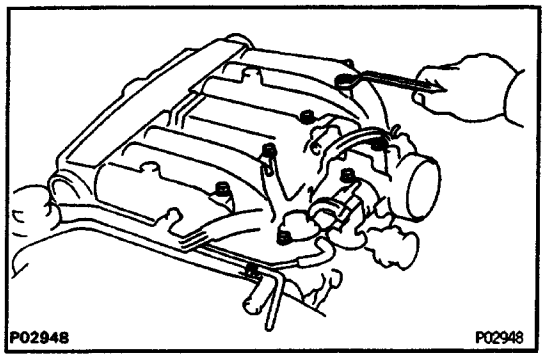

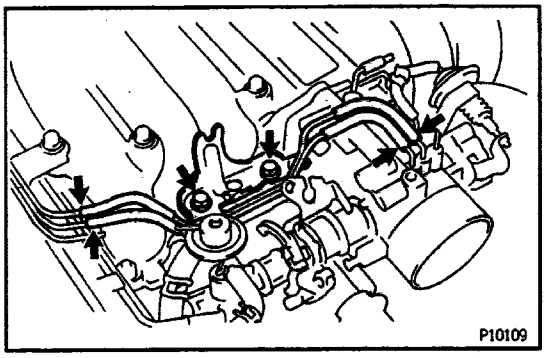

(c) Install the accelerator cable bracket with the 2 bolts.
(d) Connect the 4 vacuum hoses to the air pipes.

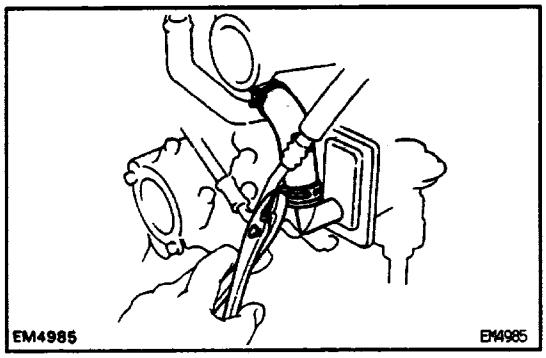

(e) Connect the No.1 air hose to the reed valve.

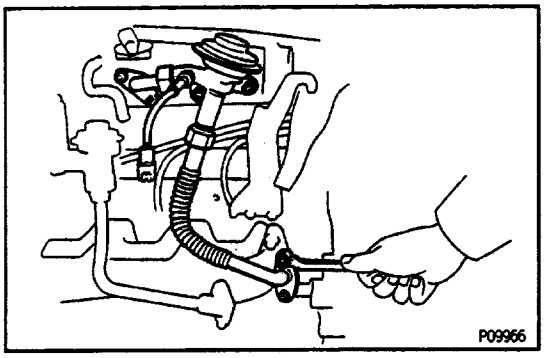

(f) Position 2 new gaskets to the intake chamber and RH exhaust manifold.
(g) Install the EGR valve with the pipes to the intake chamber and RH exhaust manifold.

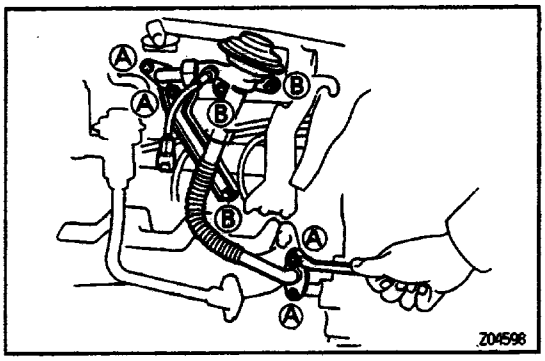

(h) Install the air intake chamber stay and throttle cable bracket. Install and torque the 6 nuts and 2 bolts.
Torque:
(A) 29 N–m (300 kgf–cm. 22 ft–lbf)
(B) 18 N–m (185 kgf–cm, 13 ft–lbf)

(i) Connect the EGR hoses to the air pipe and EGR vacuum modulator.
(j) Connect the EGR gas temperature sensor connector.
(k) Connect the vacuum hose to the gas filter.

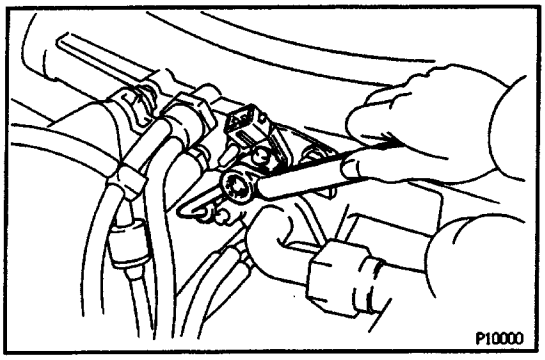

(l) Connect the cold start injector tube with a new gasket and the union bolt.
Torque: 15 N–m (150 kgf–cm, 13 ft–lbf)
(m) Connect the cold start injector connector:

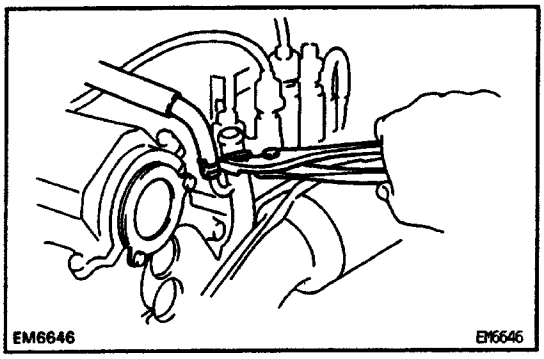

(n) Install the No. 5 water bypass hose to the water bypass pipe.

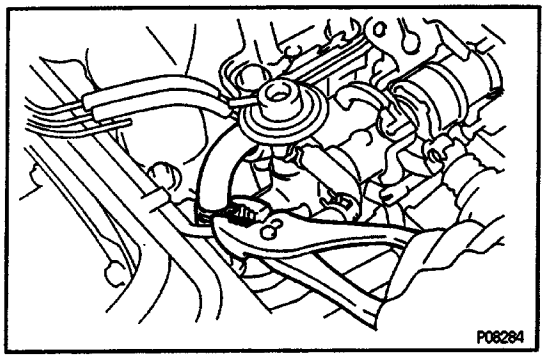

(o) Connect the No.4 water bypass hose to the union of the intake manifold.

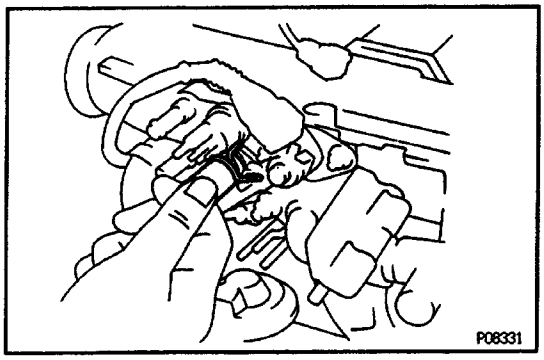

(p) Connect the PCV hose to the union.

(q) Connect the canister vacuum hose to the throttle body.
(r) Connect the throttle position sensor connector.

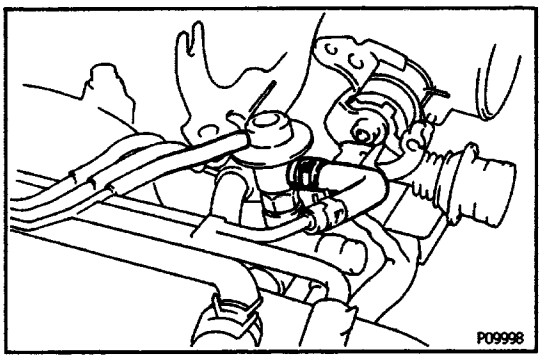

5. CONNECT FUEL RETURN HOSE
6. CONNECT VACUUM SENSING HOSE
7. CONNECT AIR CLEANER HOSE

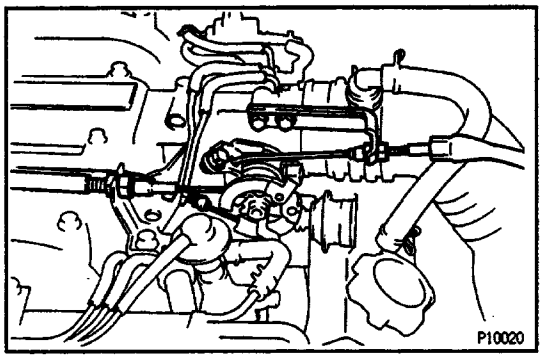

6. CONNECT THESE CABLES:
(a) A/T:
Throttle cable
(b) Accelerator cable
(c) w/ Cruise control:
Actuator cable with bracket

9. REFILL WITH ENGINE COOLANT

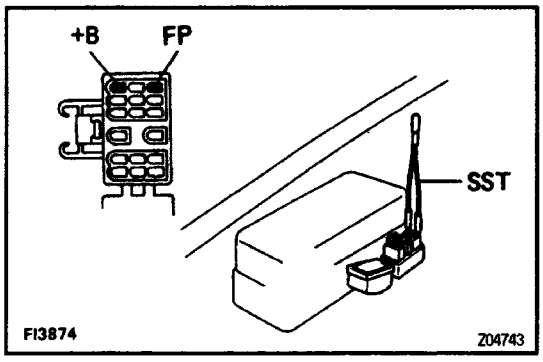

10. CHECK FOR FUEL LEAKAGE
(a) With the ignition switch ON, use SST to connect terminals FP and +B of the DLC1.
SST 09843–18020
(b) Check for fuel leakage.
(c) Remove SST from the DLC1.

OPERATION
FUEL SYSTEM

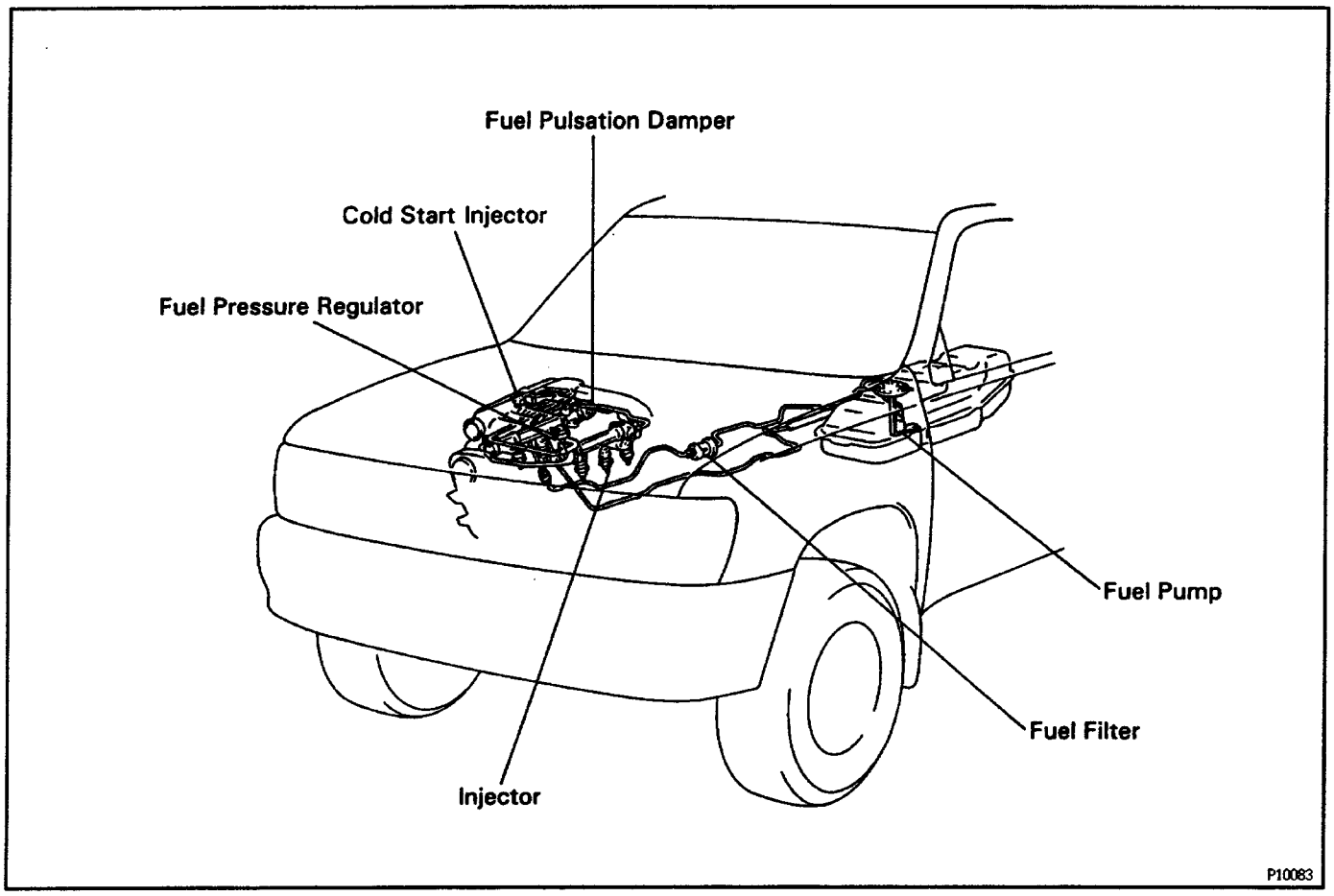

Fuel pumped up by the fuel pump flows through the fuel filter and is distributed to each injector and cold start injector at a set pressure maintained by the fuel pressure regulator.
The fuel pressure regulator adjusts the pressure of the fuel from the fuel line (high pressure side) to a pressure 284 kPa (2.9 kgf/cm2, 41 psi) higher than the pressure inside the intake manifold. Excess fuel is returned to the fuel tank through the return pipe. When the engine is hot, the fuel pressure is increased to control percolation in the fuel system and improve restartability and idling stability.
The pulsation damper absorbs the slight fluctuations in fuel pressure caused by fuel injected from the injector.
Fuel is injected into the intake manifold according to signals from the ECM.
When starting, the cold start injector operates when engine coolant temperature is less than 70˚ C (158˚ F), injecting fuel into the air intake chamber to improve startability.

AIR INDUCTION SYSTEM

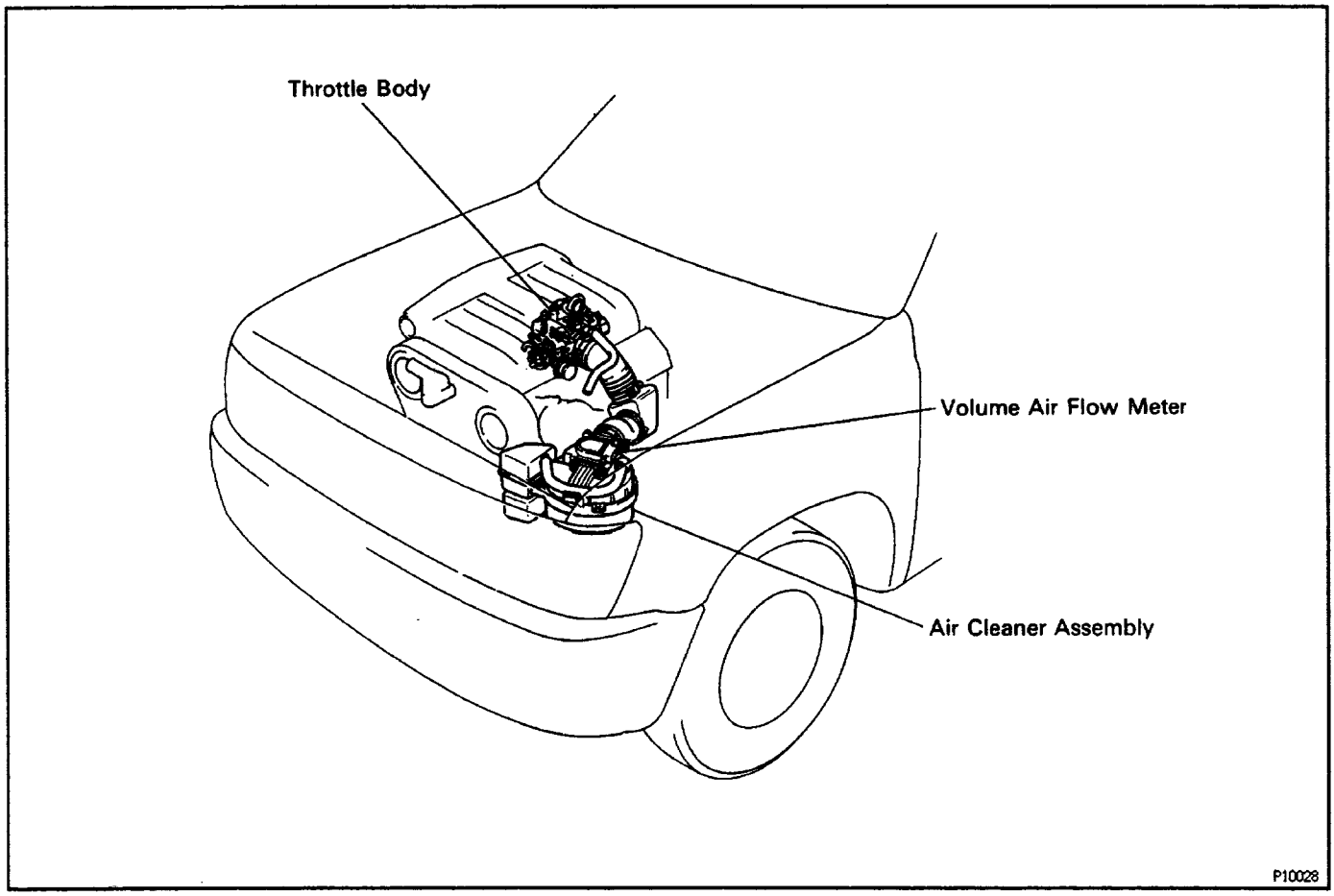

Air filtered through the air cleaner passes through the volume air flow meter and the amount flowing to the air intake chamber is determined according to the throttle valve opening in the throttle body and the engine speed.

The volume air flow meter measures the intake air flow by the opening of the measuring plate in response to the volume of intake air to the engine.

Located in the throttle body is the throttle valve, which regulates the volume of intake air to the engine. Intake air controlled by the throttle valve opening is distributed from the air intake chamber to the manifold of each cylinder and is drawn into the combustion chamber.

At low temperatures the air valve opens and air flows through the air valve and the throttle body, into the air intake chamber. During engine warming up, even if the throttle valve is completely closed, air flows to the air intake chamber, thereby increasing the idle speed (first idle operation).

The air intake chamber prevents pulsation of the intake air, reduces the influence on the volume air flow meter and increases the accuracy of the measurement of the intake air volume. It also prevents intake air interference in each cylinder.

ELECTRONIC CONTROL SYSTEM

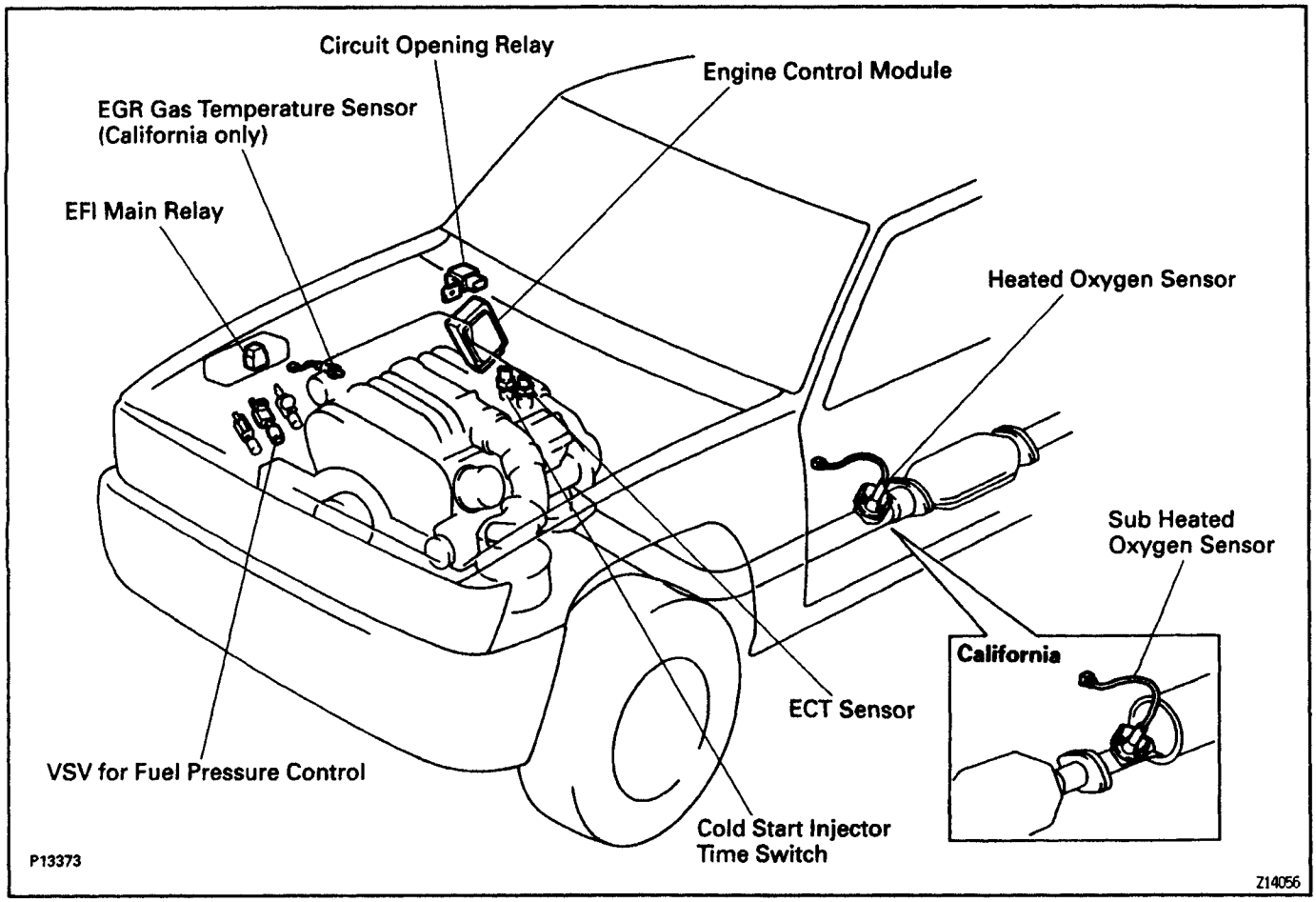

The control system consists of sensors which detect various engine conditions, and an ECM which determines the injection volume (timing) based on the signals from the sensors.

The various sensors detect the intake air volume, engine speed, oxygen density in the exhaust gas, engine coolant temperature, intake air temperature and atmospheric pressure etc. and convert the information into electrical signals which are sent to the ECM. Based on these signals, the ECM calculates the optimum ignition timing for the current conditions and operates the injectors.

The ECM not only controls the fuel injection timing, but also the self diagnostic function which records the occurrence of a malfunction, ignition timing control, idle speed control, fuel pressure control and fuel pump control.

PRECAUTION

1. Before working on the fuel system, disconnect the negative (–) terminal cable from the battery.
HINT: Any diagnostic trouble code retained by the computer will be erased when the negative (–) terminal cable is removed from the battery.
Therefore, if necessary, read the diagnostic trouble code before removing the negative (–) terminal cable from the battery.

2. Do not smoke or work near an open flame when working on the fuel system.

3. Keep gasoline away from rubber or leather parts.

MAINTENANCE PRECAUTIONS

1. CHECK CORRECT ENGINE TUNE–UP
(See tune–up in Engine Mechanical)

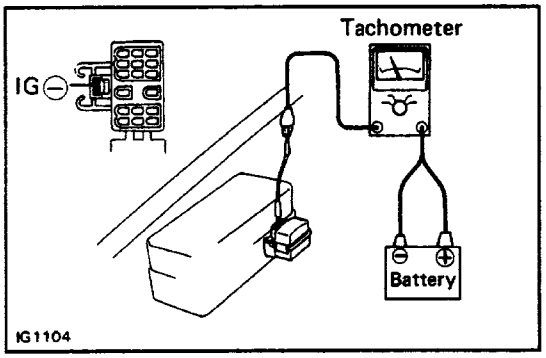

2. PRECAUTIONS WHEN CONNECTING GAUGE
(a) Connect the tachometer positive terminal to the IG E) terminal of the DLC1.
(b) Use the battery as the power source for the timing light, tachometer, etc.

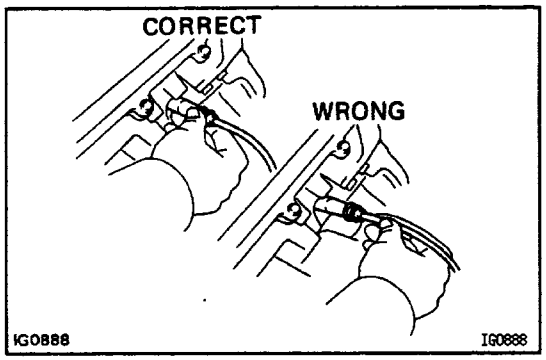

3. IN EVENT OF ENGINE MISFIRE. THESE PRECAUTIONS SHOULD BE TAKEN
(a) Check proper connection of battery terminals, etc.
(b) Handle high–tension cords carefully.
(c) After repair work, check that the ignition coil terminals and all other ignition system lines are reconnected securely.
(d) When clearing the engine compartment, be especially careful to protect the electrical system from water.

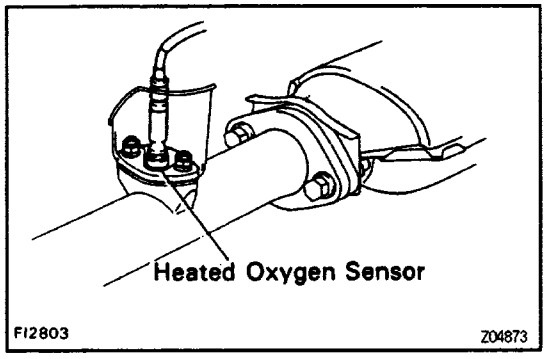

4. PRECAUTIONS WHEN HANDLING HEATED OXYGEN SENSOR
(a) Do not allow the heated oxygen sensor to drop or hit against an object.
(b) Do not allow the sensor come into contact with water.

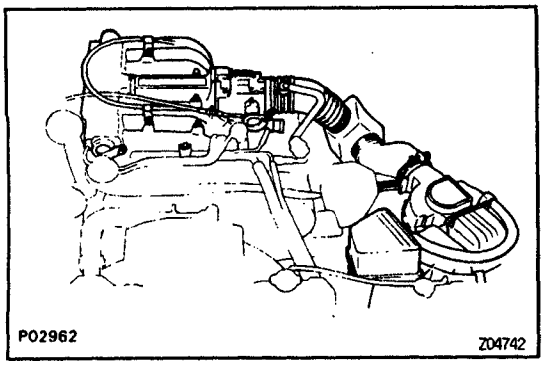

AIR INDUCTION SYSTEM

1. Separation of the engine oil dipstick, oil filler cap, PCV hose, etc. may cause the engine to run out of tune.
2. Disconnection, looseness or cracks in the parts of the air induction system between the volume air flow meter and cylinder head will cause air suction and cause bad engine tuning.

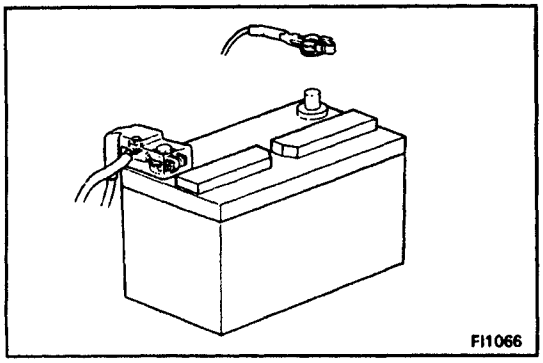

ELECTRONIC CONTROL SYSTEM

1. Before removing MFI wiring connectors, terminals, etc., first disconnect the power by either turning the ignition switch OFF or disconnecting the negative (–) terminal cable from the battery.
2. When installing a battery, be especially careful not to incorrectly connect the positive and negative cables.
3. Do not permit parts to receive a severe impact during removal or installation. Handle all MFI parts carefully, especially the ECM.
4. Take great care during troubleshooting as there are numerous transistor circuits and even slight terminal contact can cause further troubles.
5. Do not open the ECM cover.
6. When inspecting during rainy weather, take care to prevent entry of water. Also, when washing the engine compartment, prevent water from getting on the MFI parts and wiring connectors.
7. Parts should be replaced as an assembly.
8. Care is required when pulling out the inserting wiring connectors.

(a) To pull the connector out, release the lock and pull or the connector.

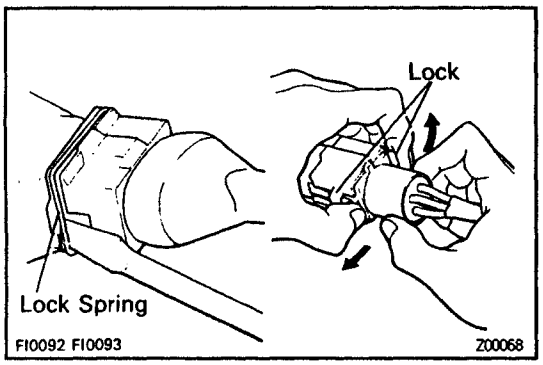

(b) Fully insert the connector and check that it is locked,

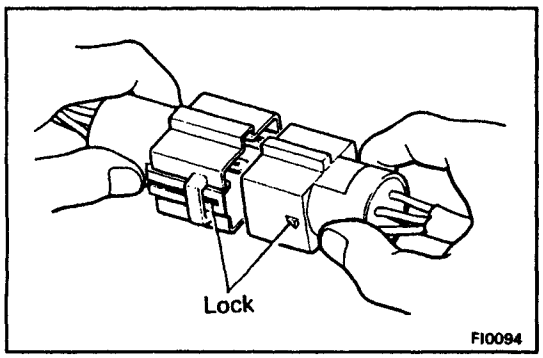

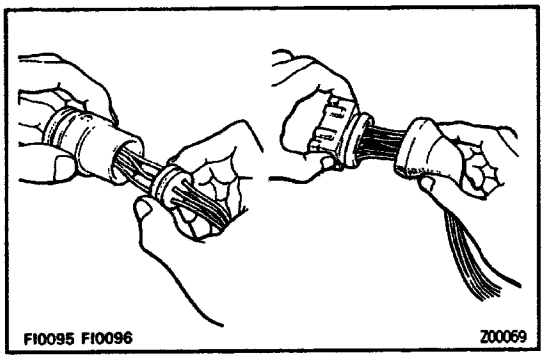

9. When inspecting a connector with a volt/ohmmeter.
(a) Carefully take out the water–proofing rubber if it is a water–proof type connector.

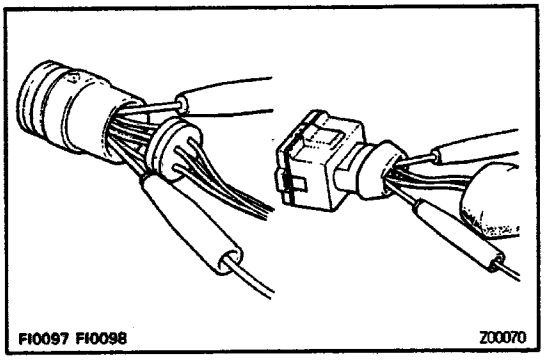

(b) Insert the tester probe into the connector from the wiring side when checking the continuity, amperage or voltage.
(c) Do not apply unnecessary force to the terminal.
(d) After the check, securely install the water–proofing rubber on the connector.

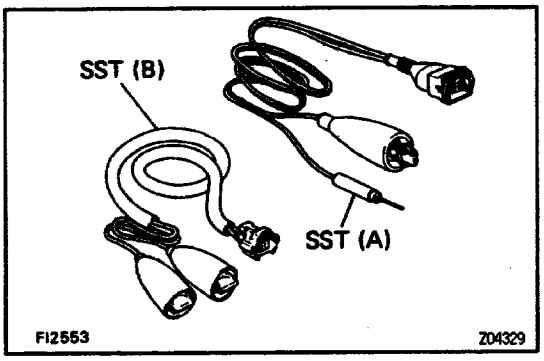

10. Use SST for inspection or testing of the injector, cold start injector or their wiring connectors.
SST 09842–30050 (A)
09842–30070 (B)

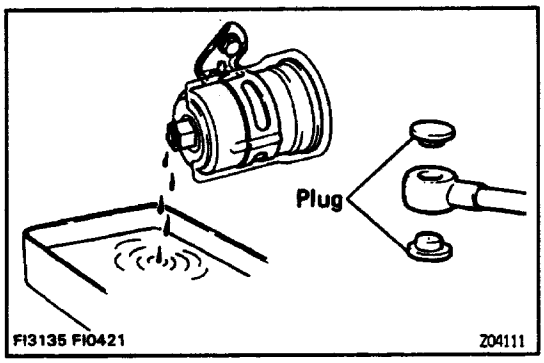

FUEL SYSTEM

1. When disconnecting the connection of the high pressure fuel line, a large amount of gasoline may come out so observe these procedures:
(a) Put a container under the connection.
(b) Slowly loosen the connection.
(c) Disconnect the connection.
(d) Plug the connection with a rubber plug.
2. When connecting the flare nut or union bolt on the high pressure pipe union, observe these procedures:
Union bolt type:
(a) Always use a new gasket.
(b) Tighten the union bolt by hand.
(c) Tighten the union bolt to the specified torque.
Torque: 15 N–m (150 kgf–cm. 11 ft–lbf)

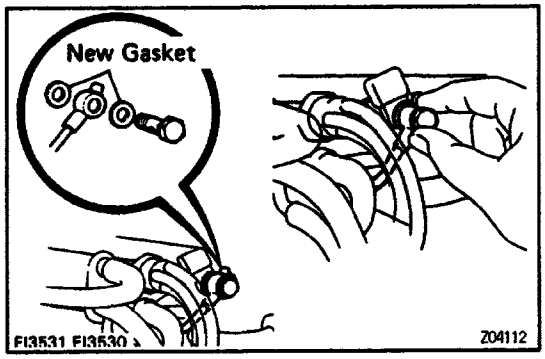

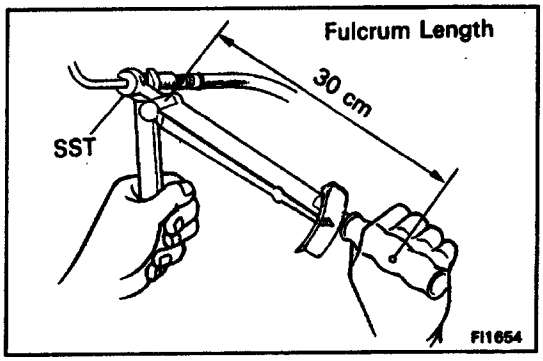

Flare nut type:

(a) Apply alight coat of engine oil to the flare and tighten the flare nut by hand.

(b) Then, using SST, tighten the flare nut to the specified torque.

SST 09631–22020

Torque: 27 N–m (280 kgf–cm, 20 ft–lbf)

HINT: Use a torque wrench with a fulcrum length of 30 cm 0 1.81 in.)

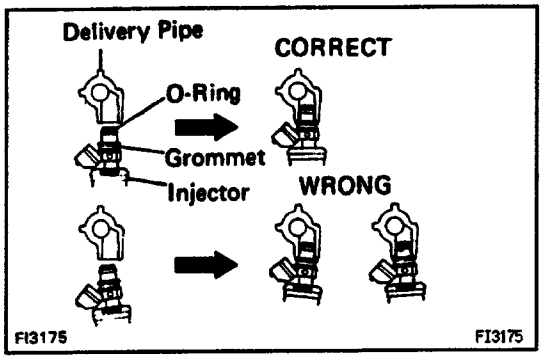

3. Observe these precautions when removing and installing the injectors:

(a) Never reuse the O – ring.

(b) When placing a new O–ring on the injector, take care not to damage it in any way. .

(c) Lubricate the new O–ring with spindle oil or gasoline before installing – never use engine, gear or brake oil.

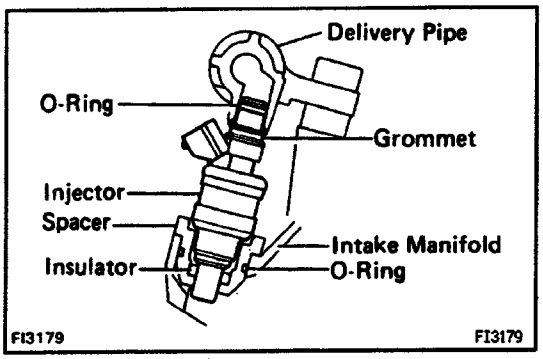

4. Install the injector to the delivery pipe and intake manifold as shown in the illustration.

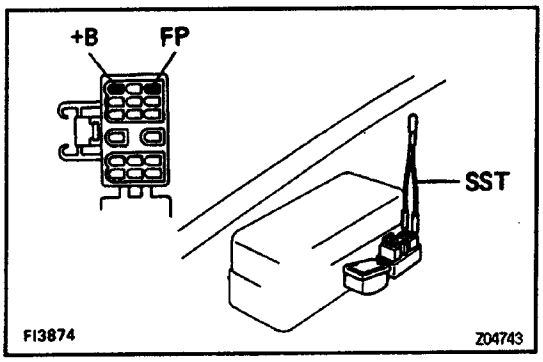

5. Confirm that there are no fuel leaks after doing maintenance anywhere on the fuel system

(a) With engine stopped, turn the ignition switch ON.

(b) Using SST, connect terminals FP and +B of the DLC1.

SST 09843–18020

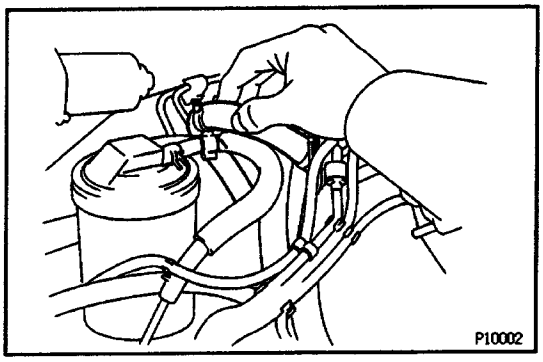

(c) Pinch the fuel return hose. The pressure in the high pressure line will rise to approx. 392 kPa (4 kgf/cm2. 57 psi). In this state, check to see that there are no leaks from any part of the fuel system.

NOTICE: Always pinch the hose. Avoid bending the hose a: it may cause the hose to crack.

(d) Turn the ignition switch OFF.

(e) Remove SST

SST 09843–18020

PREPARATION

SST (SPECIAL SERVICE TOOLS)

		Wire Gauge Set — Throttle body
	09240–00020 Injection Measuring Tool Set	
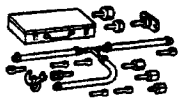	09268–41045 Injection Measuring Attachment	
	(09268–52010) EFI Fuel Pressure Gauge	
	09268–45012 Power Steering Hose Nut 14 x 17 mm Wrench Set	Fuel line flare nut
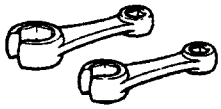	09631–22020 Wire 'A' EFI Inspection	
	09842–30050 Wiring 'F" EFI Inspection	
	09842–30070 Diagnosis Check Wire	
	09843–18020	

RECOMMENDED TOOLS

TOOYOTA Electrical Tester Set

	09082–00050 Engine Adjust Kit.	
	09200–00010 Hose Plug Set.	Plug for the vacuum hose, fuel hose ect..
	09258–00030	

EQUIPMENT

Graduated cylinder	Injector
Carburetor cleaner	Throttle body
Tachometer	
Soft brush	Throttle body

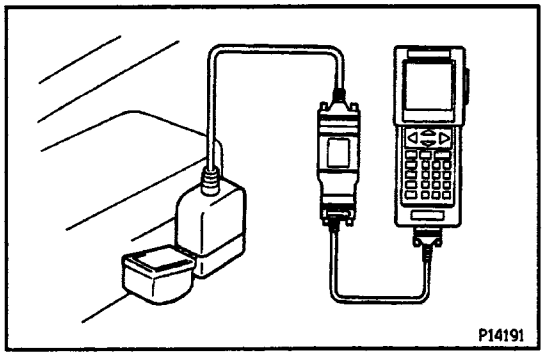

REFERENCE VALUE OF ECM DATA

HINT: ECM data can be monitored by TOYOTA hand–held tester.

1. Hook up the TOYOTA hand–held tester to DLC1.
2. Monitor ECM data by following the prompts on the tester screen.
   Please refer to the TOYOTA hand–held tester operator's manual for further details.

REFERENCE VALUE FOR ECM DATA (Engine at normal operating temperature)

Item	Inspection condition	Reference value
INJECTOR	Engine cold to hot Engine idling at normal operating temperature *1	Gradually decreases Approx. 2.2 – 2.7 m secs
IGNITION	Increase engine rpm	Gradually increases
ENGINE SPEED	RPM kept stable (Comparison with tachometer)	No great changes
VAF	Engine idling at normal operating temperature *1 Increase engine speed	Approx. 2.2 –3.4 V Gradually increases
ECT	Engine at normal operating temperature	75 – 95° C (167 – 203° F) *2
THROTTLE	Closed throttle position Wide open throttle From closed throttle position to wide open throttle	Below 5° Above 70° Gradually increases
VEHICLE SPD	During driving (Comparison with "odometer)	No large differences
TARGET A / F No.1	Engine idling	2.50 ± 1.25 V *3
KNOCK FS	Depress throttle pedal suddenly during idling	ON
A/F FB No. 1	RPM stable at 2,500 rpm	ON
STA SIGNAL	During cranking	ON
CTP SIGNAL	Closed throttle position	ON
A/C SIGNAL	A/C switch ON	ON
PNP SIGNAL *4	–	GEAR
Ox No. 1	RPM stable at 2,500 rpm	RICH LEAN is repeated

*1: All accessories and A/C are switched OFF.

*2: If the engine coolant temperature sensor circuit is open or shorted, the ECM assumes an engine coolant temperature value of 80˚C (176" F).

*3: When feedback control is forbidden, 0 V is displayed.

*4: A/T only.

SERVICE SPECIFICATIONS

SERVICE DATA

Fuel pressure regulator	Fuel pressure	at no vacuum	265 – 304 kPa (2.7 – 3.1 kgf/cm², 38 – 44 psi)
Cold start injector	Resistance		2 – 4 Ω
	Fuel leakage		One drop or less per minute
Injector	Resistance		13.4 – 14.2 Ω
	Injection volume		45 – 55 cm³ (2.7 – 3.4 cu in.) per 15 sec.
	Difference between each cylinder		6 cm³ (0.4 cu in.) or less
	Fuel leakage		One drop or less per minute
Volume air flow meter		Terminals	Resistance
		VS – E2	200 – 600 Ω (Measuring plate fully closed)
		VS – E2	20 – 1,200 Ω (Measuring plate fully open)
		VC – E2	200 – 400 Ω
		FC – E1	Infinity
		THA – E2	10 – 20 kΩ at −20°C (−4°F)
		THA – E2	4 – 7 kΩ at 0°C (32°F)
		THA – E2	2 – 3 kΩ at 20°C (68°F)
		THA – E2	0.9 – 1.3 kΩ at 40°C (104°F)
		THA – E2	0.4 – 0.7 kΩ at 60°C (140°F)
Throttle body	Throttle body fully closed angle		6°
	Dashpot setting speed		2,000 ± 200 rpm
	Throttle opener setting speed		900 – 1,800 rpm
Throttle	Clearance between stop screw and lever	Terminals	Resistance
position sensor	0 mm (0 in.)	VTA – E2	0.47 – 6.1 kΩ
	0.50 mm (0.020 in.)	IDL – E2	2.3 kΩ or less
	0.80 mm (0.031 in.)	IDL – E2	Infinity
	Throttle valve fully open	VTA – E2	3.1 – 12.1 kΩ
	–	VC – E2	3.9 – 9.0 kΩ
Cold start injector time switch	Resistance	STA – STJ	30 – 50 Ω below 10°C (50°F)
		STA – STJ	70 – 90 Ω above 25°C (77°F)
		STA – Ground	30 – 90 Ω
Engine coolant temp. sensor	Resistance		10 – 20 kΩ at −20°C (−4°F)
			4 – 7 kΩ at 0°C (32°F)
			2 – 3 kΩ at 20°C (68°F)
			0.9 – 1.3 kΩ at 40°C (104°F)
			0.4 – 0.7 kΩ at 60°C (140°F)
			0.2 – 0.4 kΩ at 80°C (176°F)
VSV (Fuel pressure control)	Resistance		30 – 50 Ω at 20°C (68°F)
EGR gas temp. sensor	Resistance		64 – 97 kΩ at 50°C (122°F)
			11 – 16 kΩ at 100°C (212°F)
			2 – 4 kΩ at 150°C (302°F)
Heated oxygen sensor	Heater coil resistance		5 – 7 Ω at 20°C (68°F)
Sub heated oxygen sensor	Heater coil resistance		11 – 16 Ω at 20°C (68°F)

ECM	Condition	Terminals	Voltage
	IG SW ON	+B–E1	9 – 14 V
	IG SW ON	+B1 – E1	9 – 14 V
	–	BATT – E1	9 – 14 V
	IG SW ON – Throttle valve open	IDL – E2 (E21)	9 – 14 V
	IG SW ON – Throttle valve fully closed (Throttle opener must be cancelled first)	VTA – E2 (E21)	0.3 – 0.8 V
	IG SW ON – Throttle valve fully open	VTA – E2 (E21)	3.2 – 4.9 V
	IG SW ON	VC – E2 (E21)	4.5 – 5.5 V
	IG SW ON – Measuring plate fully closed	VS – E2 (E21)	4.0 – 5.5 V
	IG SW ON – Measuring plate fully open	VS – E2 (E21)	0.2 – 0.5 V
	Idling	VS – E2 (E21)	2.3 – 2.8 V
	3,000 rpm	VS – E2 (E21)	0.3 – 1.0 V
	IG SW ON	10 or 20 – E01	9 – 14 V
	IG SW ON	10 or 20 – E02	9 – 14 V
	IG SW ON – Intake air temp. 20°C (68°F)	THA – E2 (E21)	0.5 – 3.4 V
	IG SW ON – Engine coolant temp. 80°C (176°F)	THW – E2 (E21)	0.2 – 1.0 V
	Cranking	STA – E1	6 V or more
	Idling	IGT – E1	Pulse generation
	No trouble (Malfunction Indicator Lamp off) and engine running	W – E1	9 – 14 V
	Cranking – Engine coolant temp. 80°C (176°F)	STJ – E1	6 V or more
	Stop light switch ON	STP	7.5 – 14 V

ECM	Condition	Terminals	Resistance
	Throttle valve open	IDL – E2 (E21)	Infinity
	Throttle valve fully closed		
	(Throttle opener must be cancelled first)		
		IDL – E2 (E21)	2,300 Ω or less
	Throttle valve fully open	VTA – E2 (E21)	3,100 – 12,100 Ω
	Throttle valve fully closed		
	(Throttle opener must be cancelled first)		
		VTA – E2 (E21)	470 – 6,100 Ω
		VC – E2 (E21)	3,900 – 9,000 Ω
	Measuring plate fully closed	VS – E2 (E21)	200 – 600 Ω
	Measuring plate fully open	VS – E2 (E21)	20 – 1,200 Ω
	Intake sir temp. 20° C (68°F)	THA – E2 (E21)	2,000 – 3,000 Ω
	Coolant temp. 80° C (176° F)	THW – E2 (E21)	200 – 400 Ω
	Cold (–10°C (14°F) to 50°C (122°F))		
		G1 or G2 – G⊖	125 – 200 Ω
	Hot (50°C (122°F) to 100°C (212°F))		
		G1 or G2 – G⊖	160 – 235 Ω
	Cold (–10°C (14°F) to 50°C (122°F))	NE – G⊖	155 – 250 Ω
	Hot (50°C (122°F) to 100°C (212°F))	NE – G⊖	190 – 290 Ω
Fuel cut rpm	Fuel return rpm	M/T	1,300 rpm
		A/T	1,500 rpm

TORQUE SPECIFICATIONS

Part tightened	N·m	kgf·cm	ft·lbf
Cold start injector x Air intake chamber	7.8	80	69 in.·lbf
Delivery pipe x Pulsation damper	29	300	22
Delivery pipe x Fuel pressure regulator	29	300	22
Delivery pipe x Cold start injector tube	15	150	11
Delivery pipe x No.3 fuel pipe	34	350	25
Delivery pipe x No.2 fuel pipe	34	350	25
Delivery pipe x Intake manifold	13	130	9
Fuel line	30	310	22
Fuel pump	3.9	40	35 in.·lbf
Fuel drain plug	6.4	65	56 in.·lbf

SUB HEATED OXYGEN SENSOR (California only)

SUB HEATED OXYGEN SENSOR INSPECTION

1. INSPECT SUB HEATED OXYGEN SENSOR

HINT: Inspect only when code No.27 is displayed.

(a) Cancel the diagnostic code. (See page EG2–173)

(b) Warm up the engine until it reaches normal operating temperature.

(c) M/T:

Drive for 5 minutes or more at a speed less than 80 km/h (50 mph) in 4th or 5th gear.

A/T:

Drive for 5 minutes or more at a speed less than 80 km/h (50 mph) in ”D” position.

(d) Following the conditions in step (c), fully depress on the accelerator pedal for 2 seconds or more.

(e) Stop the vehicle and turn the ignition switch OFF.

(f) Carry out steps (b), (c) and (d) again to test acceleration.

If code No.27 appears again, check the sub heated oxygen sensor circuit. If the circuit is normal, replace the sub heated oxygen sensor.

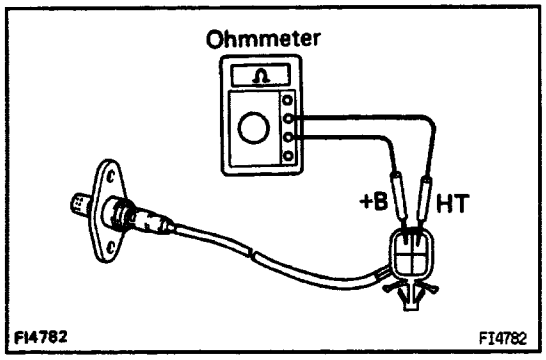

2. INSPECT HEATER RESISTANCE OF SUB HEATED OXYGEN SENSOR

Using an ohmmeter, measure the resistance between terminals +B and HT.

Resistance:

At 20 ˚ C (68 ˚F): 11 – 16Ω

If resistance is not as specified, replace the sub heated oxygen sensor.

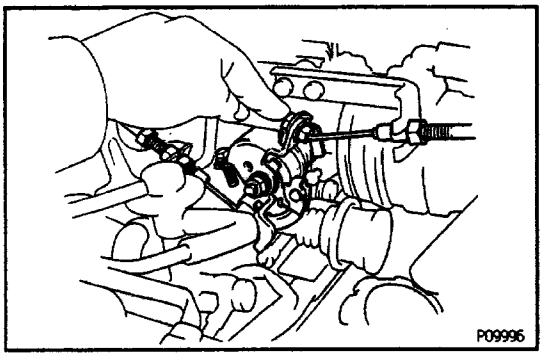

THROTTLE BODY

ON–VEHICLE INSPECTION

1. INSPECT THROTTLE BODY

(a) Check that the throttle linkage moves smoothly.

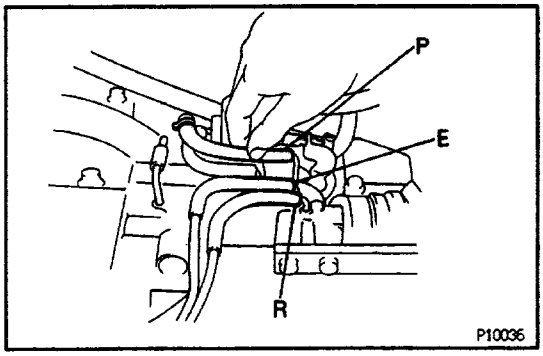

(b) Check the vacuum at each port.

- Start the engine.
- Check the vacuum with your finger.

Port name	At idle	At 3,500 rpm
E	No vacuum	Vacuum
R	No vacuum	Vacuum
P	No vacuum	Vacuum

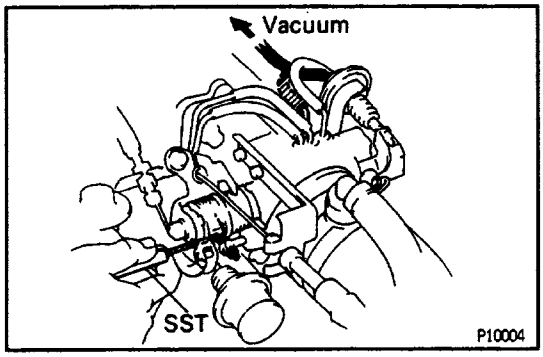

2. INSPECT THROTTLE POSITION SENSOR

(a) Apply vacuum to the throttle opener.

(b) Disconnect the sensor connector.

(c) Insert SST between the throttle stop screw and stop lever.
SST 09240–00020

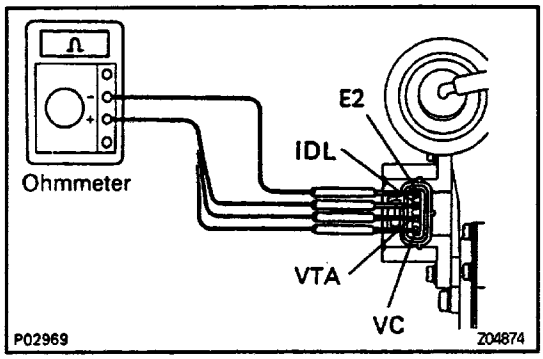

(d) Using an ohmmeter, measure the resistance between each terminal.

Clearance between lever and stop screw	Between terminals	Resistance
0 mm (0 in.)	VTA – E2	0.47 – 6.1 kΩ
0.50 mm (0.020 in.)	IDL – E2	2.3 kΩ or less
0.80 mm (0.031 in.)	IDL – E2	Infinity
Throttle valve fully open	VTA – E2	3.1 – 12.1 kΩ
–	VC – E2	3.9 – 9.0 kΩ

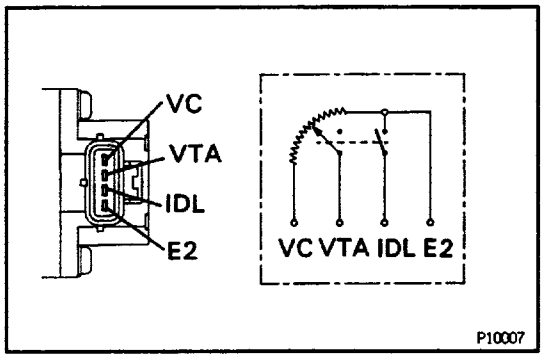

(e) Reconnect the sensor connector.

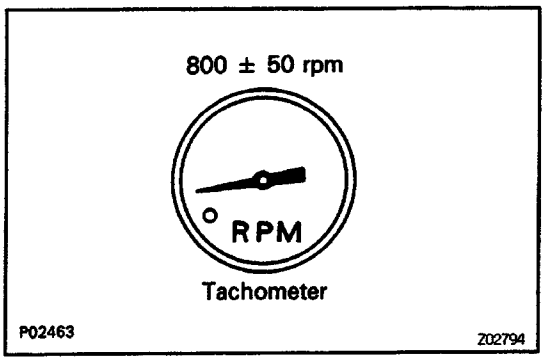

3. INSPECT DASHPOT (DP)

A. Warm up engine

Allow the engine to warm up to normal operating temperature.

B. Check idle speed and adjust, if necessary

(See idle speed inspection and adjustment in **Engine Mechanical)**

Idle speed:

800 ± 50 rpm

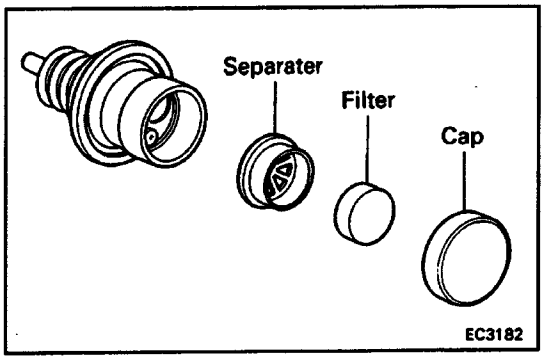

C. Remove cap, filter and separator from DP

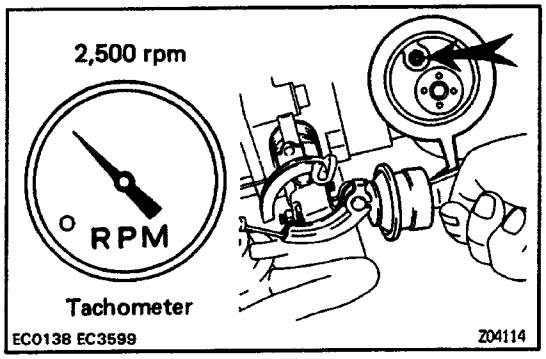

D. Check and adjust DP setting speed

(a) Maintain engine speed at 2,500 rpm or more.

(b) Plug the VTV hole with your finger.

(c) Release the throttle valve.

(d) Check the DP is set.

DP setting speed:

2,000 ± 200 rpm

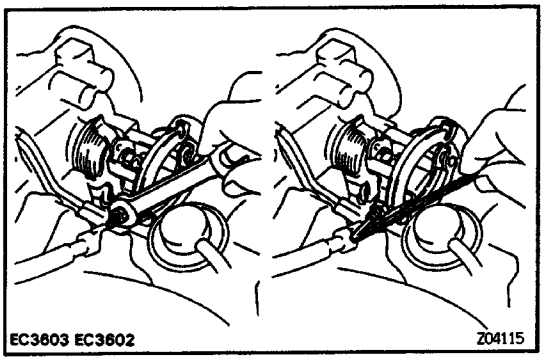

(e) If not as specified, adjust with the DP adjusting screw.

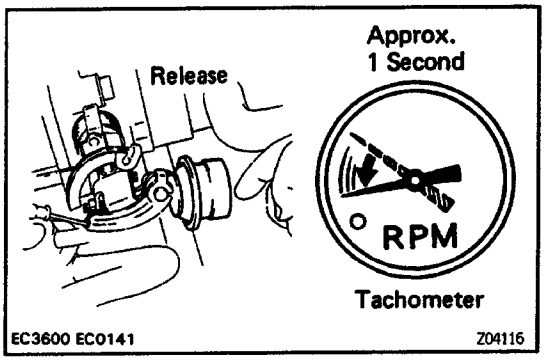

E. Check operation of VTV

(a) Set the DP setting speed in the same procedure as above;

(a) to (c).

(b) Remove your finger from the hole and check that the engine returns to idle speed in approx. 1 second.

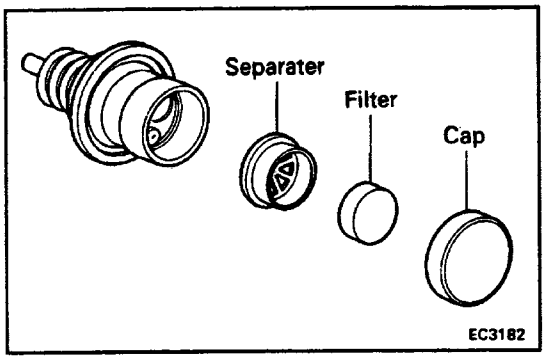

P. Reinstall DP separator, filter and cap

HINT: Install the filter with the coarser surface facing the atmospheric side (outward).

4. INSPECT THROTTLE OPENER

A. Warm up engine

Allow the engine to warm up to normal operating temperature.

B. Check idle speed

(See idle speed inspection and adjustment in Engine Mechanical)

Idle speed:

800 ± 50 rpm

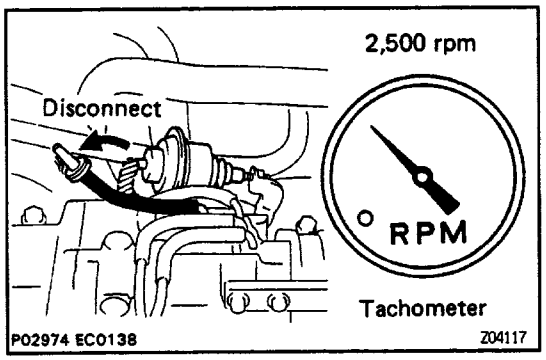

C. Check throttle opener setting speed

(a) Disconnect the vacuum hose from the throttle opener, and plug the hose end.

(b) Maintain the engine at 2,500 rpm.

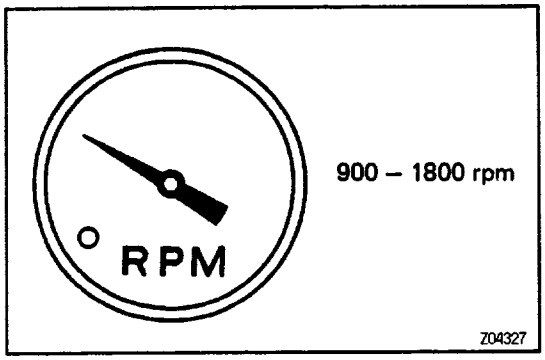

(c) Release the throttle valve.

(d) Check that the throttle opener is set.

Throttle opener setting speed:

900 – 1.800 rpm

If not as specified, replace the throttle body assembly.

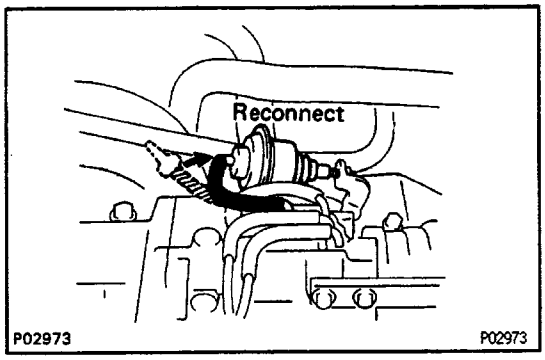

(e) Reconnect the vacuum hose to the throttle opener.

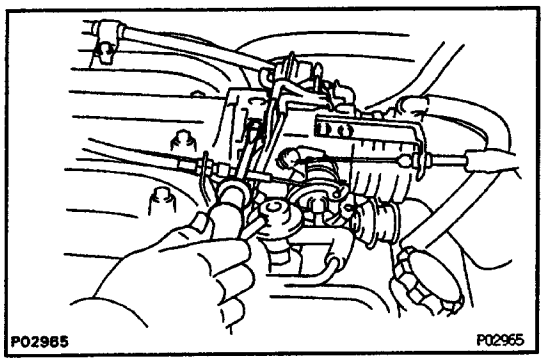

5. INSPECT AIR VALVE OPERATION

Check the engine speed by fully screwing in the idle speed adjusting screw.

At low temperature

Engine coolant temperature: below 80˚ C (176˚ F)

When the idle speed adjusting screw is in, the engine speed should drop.

After warm –up

When the idle speed adjusting screw is in, the engine speed should drop below idle speed stop.

COMPONENTS FOR REMOVAL AND INSTALLATION

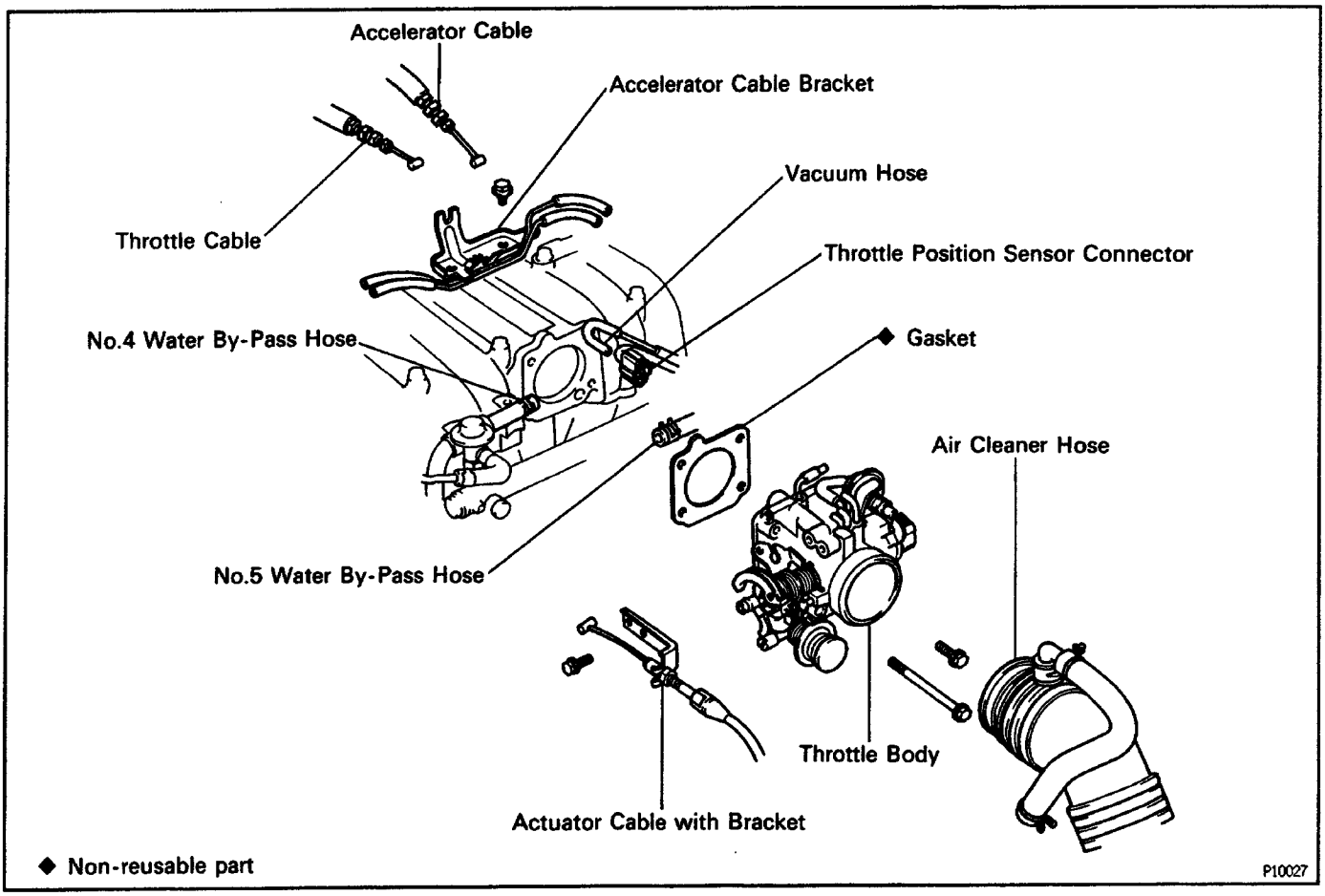

THROTTLE BODY REMOVAL

(See Components for Removal and Installation)

1. DRAIN ENGINE COOLANT FROM THROTTLE BODY

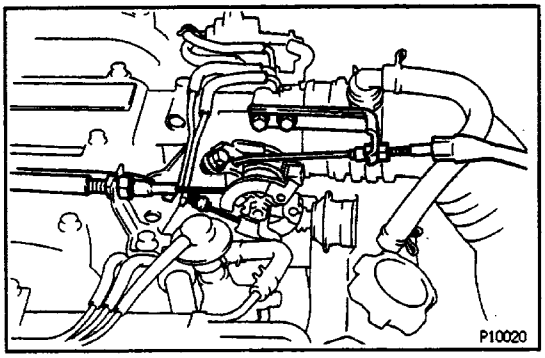

2. DISCONNECT THESE CABLES:

(a) w/ Cruise control:
Actuator cable with bracket

(b) Accelerator cable

(c) A/T:
Throttle cable

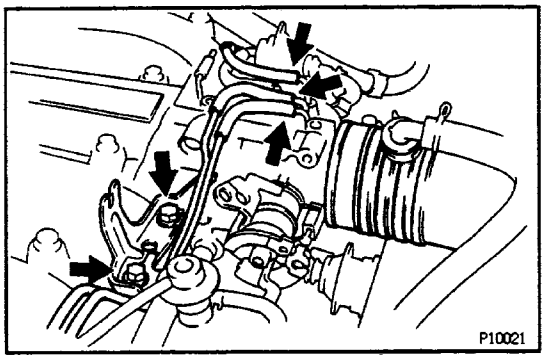

3. DISCONNECT AIR CLEANER HOSE

4. DISCONNECT VACUUM HOSES

5. REMOVE ACCELERATOR CABLE BRACKET

6. DISCONNECT THROTTLE POSITION SENSOR CONNECTOR

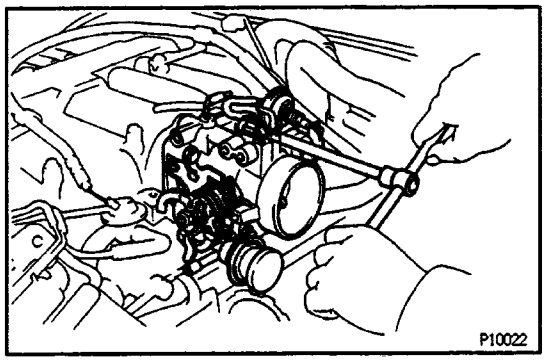

7. REMOVE THROTTLE BODY

(a) Remove the 4 bolts, throttle body and the gasket.

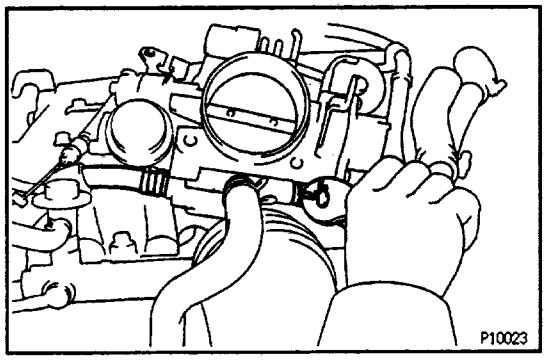

(b) Disconnect the No.4 and No.5 water bypass hoses from the throttle body.

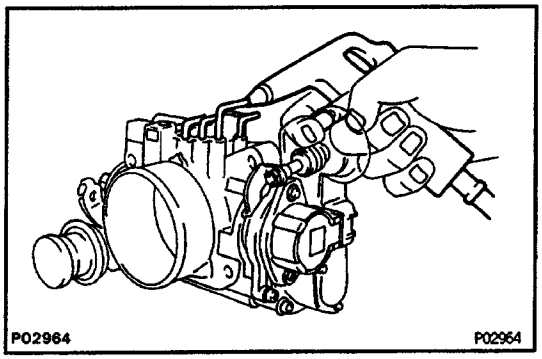

THROTTLE BODY INSPECTION

1. CLEAN THROTTLE BODY BEFORE INSPECTION

(a) Wash and clean the cast parts with a soft brush and carburetor cleaner.

(b) Using compressed air, clean all the passages and apertures in the throttle body.

NOTICE: To prevent deterioration, do not clean the throttle position sensor and dash pot.

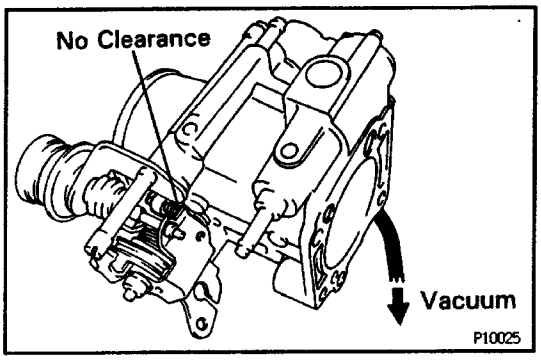

2. CHECK THROTTLE VALVE

(a) Apply vacuum to the throttle opener.

(b) Check that there is no clearance between the throttle stop screw and throttle lever when the throttle valve is fully closed.

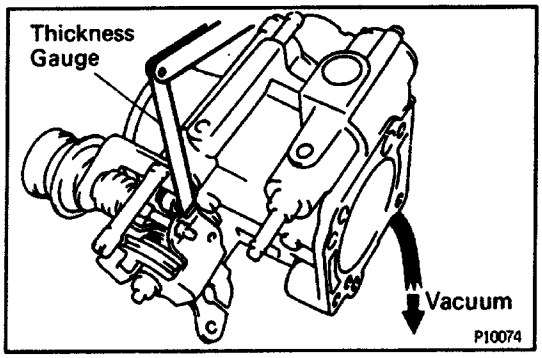

3. INSPECT THROTTLE POSITION SENSOR

(a) Apply vacuum to the throttle opener.

(b) Insert a thickness gauge between the throttle stop screw and stop lever.

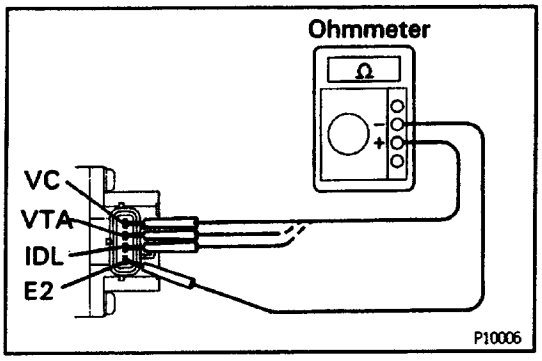

(c) Using an ohmmeter, measure the resistance between each terminal.

Clearance between lever and stop screw	Between terminals	Resistance
0 mm (0 in.)	VTA – E2	0.47 – 6.1 kΩ
0.50 mm (0.020 in.)	IDL – E2	2.3 kΩ or less
0.80 mm (0.031 in.)	IDL – E2	Infinity
Throttle valve fully open	VTA – E2	3.1 – 12.1 kΩ
–	VC – E2	3.9 – 9.0 kΩ

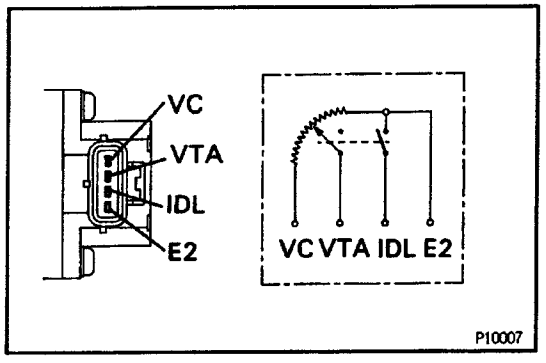

(d) Reconnect the sensor connector.

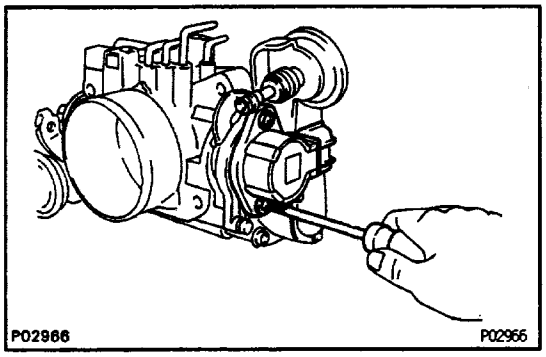

4. IF NECESSARY, ADJUST THROTTLE POSITION SENSOR

(a) Loosen the 2 screws of the sensor.

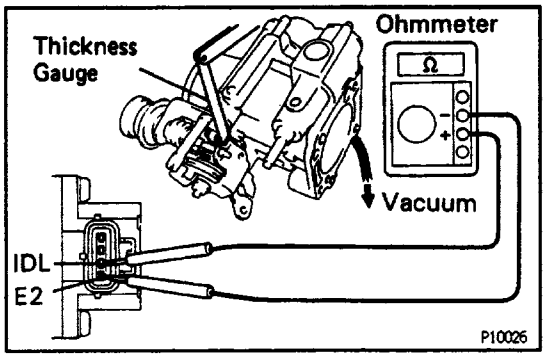

(b) Apply vacuum to the throttle opener.

(c) Insert a thickness gauge (0.60 mm or 0.024 in.) between the throttle stop screw and lever, and connect the ohmmeter to terminals IDL and E2.

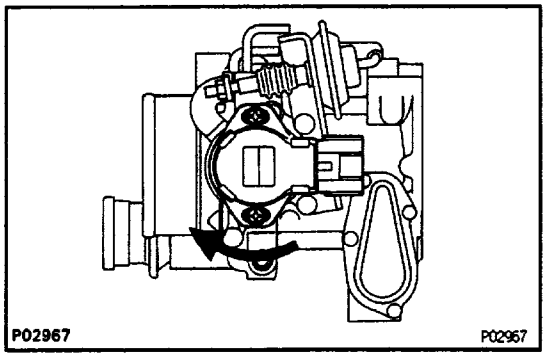

(d) Gradually turn the sensor clockwise until the ohmmeter deflects, and secure the sensor with the 2 screws.

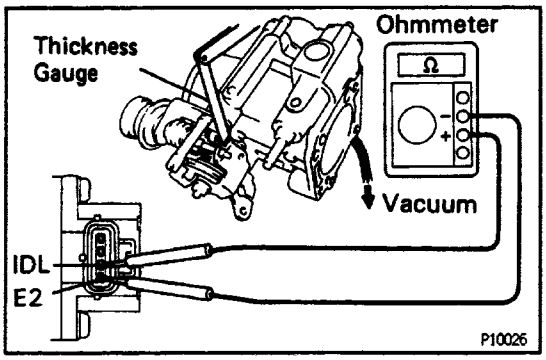

(e) Using a thickness gauge, recheck the continuity between terminals IDL and E2.

Clearance between lever and stop screw	Continuity (IDL–E2)
0.50 mm (0.020 in.)	**Continuity**
0.80 mm (0.031 in.)	**No continuity**

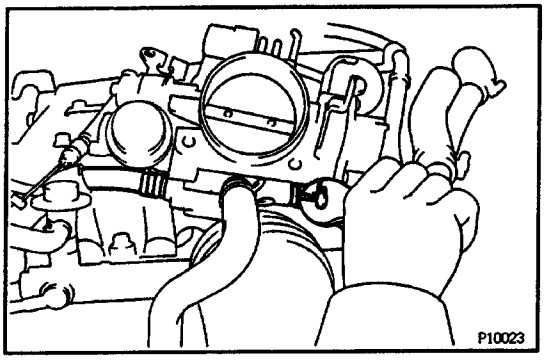

THROTTLE BODY INSTALLATION

(See Components for Removal and Installation)

1. INSTALL THROTTLE BODY

(a) Connect the No.4 and No.5 water bypass hoses to throttle body.

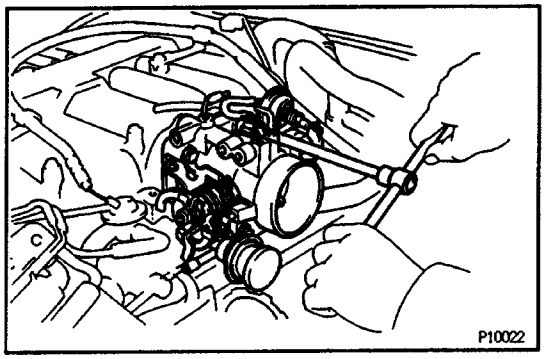

(b) Place a new gasket and install the throttle body with the 4 bolts.

Torque: 18 N–m (185 kgf–cm, 13 ft–lbf)

2. CONNECT THROTTLE POSITION SENSOR CONNECTOR

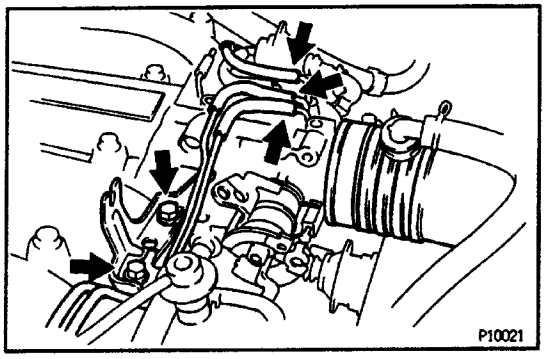

3. INSTALL ACCELERATOR CABLE BRACKET

4. CONNECT VACUUM HOSES

5. CONNECT AIR CLEANER HOSE

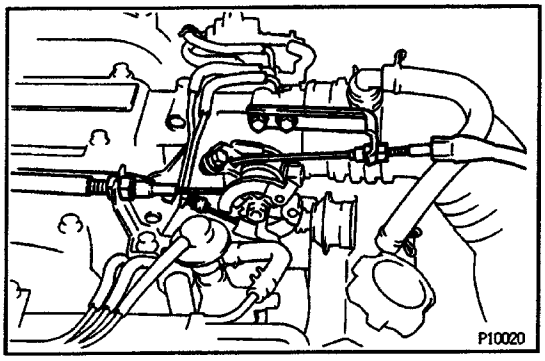

6. CONNECT THESE CABLES:

(a) A/T:
Throttle cable

(b) Accelerator cable

(c) w/ Cruise control:
Actuator cable with bracket

7. REFILL WITH ENGINE COOLANT

TROUBLESHOOTING w VOLT OHMMETER

HINT: Because the following troubleshooting procedures are designed for inspection of each separate system, the actual troubleshooting procedure may vary somewhat.

However, please refer to these procedures and troubleshoot, conforming to the inspection methods described.

For example, it is better to first make a simple check of the fuses, fusible links and connecting condition of the connectors before making your inspection according to the procedures listed.

The following troubleshooting procedures are based on the supposition that the trouble lies in either a short or open circuit in a component outside the computer or a short circuit within the computer. If engine trouble occurs even though proper operating voltage is detected in the computer connector, then the engine control module is faulty and should be replaced.

FUSES AND FUSIBLE LINK LOCATION

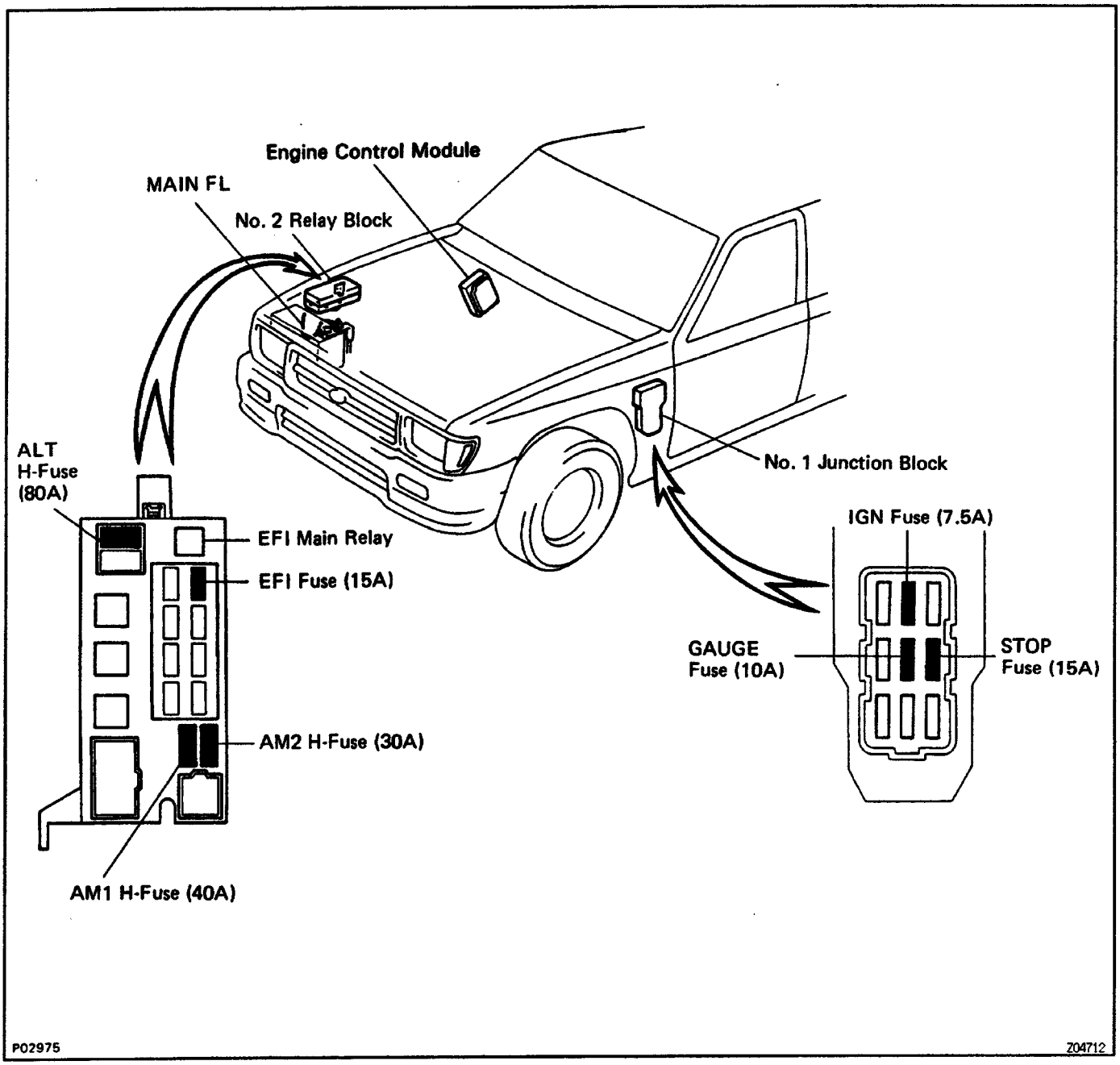

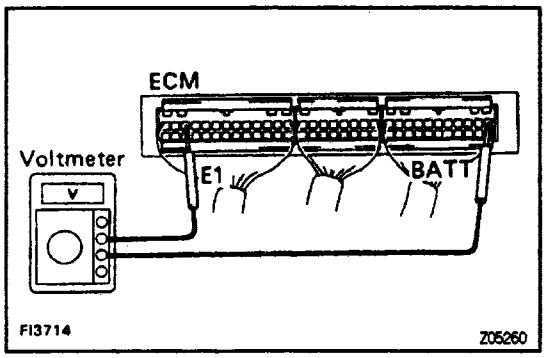

MFI SYSTEM CHECK PROCEDURE

HINT:

- **Do all voltage measurements with the connectors connected.**
- **Verify that the battery voltage is 11 V or more when the ignition switch is in 'ON' position.**
  Using a voltmeter with high impedance (1 0kΩ/V minimum), measure the voltage at each terminal of the wiring connectors.

ECM Terminals

Symbol	Terminal Name	Symbol	Terminal Name	Symbol	Terminal Name
NE	DISTRIBUTOR	VC	VOLUME AIR FLOW METER	BATT	BATTERY e +
G⊖	DISTRIBUTOR	E2	SENSOR GROUND	+B	EFI MAIN RELAY
G1	DISTRIBUTOR	VS	VOLUME AIR FLOW METER –		–
G2	DISTRIBUTOR	*3OX2	SUB HEATED OXYGEN SENSOR	+B1	EFI MAIN RELAY
IGF	IGNiTER	THA	INTAKE AIR TEMP. SENSOR		–
*1SPD2	VEHICLE SPEED SENSOR	VTA	THROTTLE POSITION SENSOR		–
*2S4	TCM SOLENOID	THW	ENGINE COOLANT TEMP. SENSOR	*1OIL	A/T OIL TEMP. WARNING LIGHT
*1L	PAR/NEUTRAL POSITION SWITCH	IDL	THROTTLE POSITION SENSOR	E21	SENSOR GROUND
*1S3	TCM SOLENOID	KNK	KNOCK SENSOR	W	MALFUNCTION INDICATOR LAMP
*12	PARK/NEUTRAL POSITION SWITCH	THG	EGR GAS TEMP. SENSOR	*1OD2	O/D MAIN SWITCH
*1S2	TCM SOLENOID	OX1	HEATED OXYGEN SENSOR	STP	STOP LIGHT SWITCH
*1N	PARK/NEUTRAL POSITION SWITCH	*2THO2	T/F FLUID TEMP. SENSOR	SEL2	–
*1S1	TCM SOLENOID	*2THO1	4WD OIL TEMP. SENSOR	*1P	PATTERN SELECT SWITCH
*2L4	TRANSFER POSITION SWITCH	TE1	DLC 1	SEL1	–
FPU	VSV (for FPU)	VF	DLC 1	*44WD	4WD SWITCH
IGT	IGNITER	TE2	DLC 1	ACT	A/C AMPLIFIER
STJ	COLD START INJECTOR		–	SPD1	VEHICLE SPEED SENSOR
EGR	VSV (for EGR)		–	*1DG	DLC1
HT1	HEATED OXYGEN SENSOR		–	A/C	A/C MAGNET SWITCH
AS	VSV (tot PAIR)		–	*1OD1	CRUISE CONTROL ECU
E1	ENGINE GROUND		–	STA	STARTER SWITCH
ACV	VSV (for A/C)		–	*3HT2	SUB HEATED OXYGEN SENSOR
#10	INJECTOR		–		–
#20	INJECTOR		–		–
E01	ENGINE GROUND		–		–
E02	ENGINE GROUND		–		–

*1: A/T only *2: 4WD A/T only *3: California only *4: 4WD only

Engine Control Module (ECM) Terminals

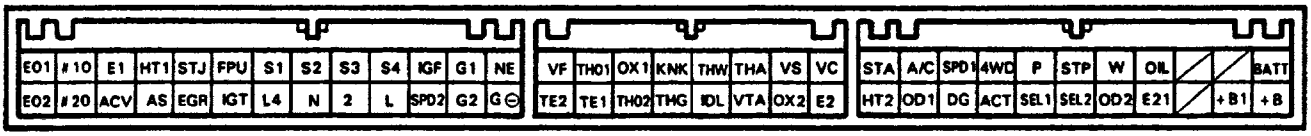

ECM Wiring Connectors Voltage

No.	Terminals	Condition		STD voltage	See page
1	BATT – E1	–		9 – 14	EG2–186
	+B – E1	Ignition SW ON			
	+B1 – E2				
2	IDL – E2 (E21)	Ignition SW ON	Throttle valve open	9 – 14	EG2–188
	VC – E2 (E21)		–	4.5 – 5.5	
	VTA – E2 (E21)		Throttle valve fully closed (Throttle opener must be cancelled first)	0.3 – 0.8	
			Throttle valve fully open	3.2 – 4.9	
3	VC – E2 (E21)	Ignition SW ON	–	4.5 – 5.5	EG2–190
	VS – E2 (E21)		Measuring plate fully closed	4.0 – 5.5	
			Measuring plate fully open	0.2 – 0.5	
		Idling		2.3 – 2.8	
		3,000 rpm		0.3 – 1.0	
	THA – E2 (E21)	Ignition SW ON	Intake air temperature 20°C (68°F)	0.5 – 3.4	
4	THW – E2 (E21)	Ignition SW ON	Engine coolant temperature 80°C (176 °F)	0.2 – 1.0	EG2–192
5	STA – E1	Cranking		6 V or more	EG2–193
6	#10 – E01 #20 – E02	Ignition SW ON		9 – 14	EG2–194
7	IGT – E1	Idling		Pulse generation	EG2–195
8	W – E1	No trouble (malfunction indicator lamp off) and engine running		9 – 14	EG2–196
9	STJ – E1	Cranking	Engine coolant temperature 80°C (176°F)	6 V or more	EG2–197
10	STP – E1	Stop light switch ON		7.5 – 14	EG2–198

Engine Control Module (ECM) Terminals

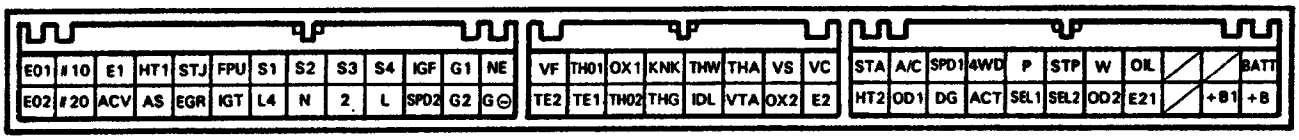

FI2796

No.	Terminals	Trouble	Condition	STD Voltage
1	BATT – E1	No voltage	–	9 – 14 V
	+B – E1		Ignition switch ON	
	+B1 – E1			

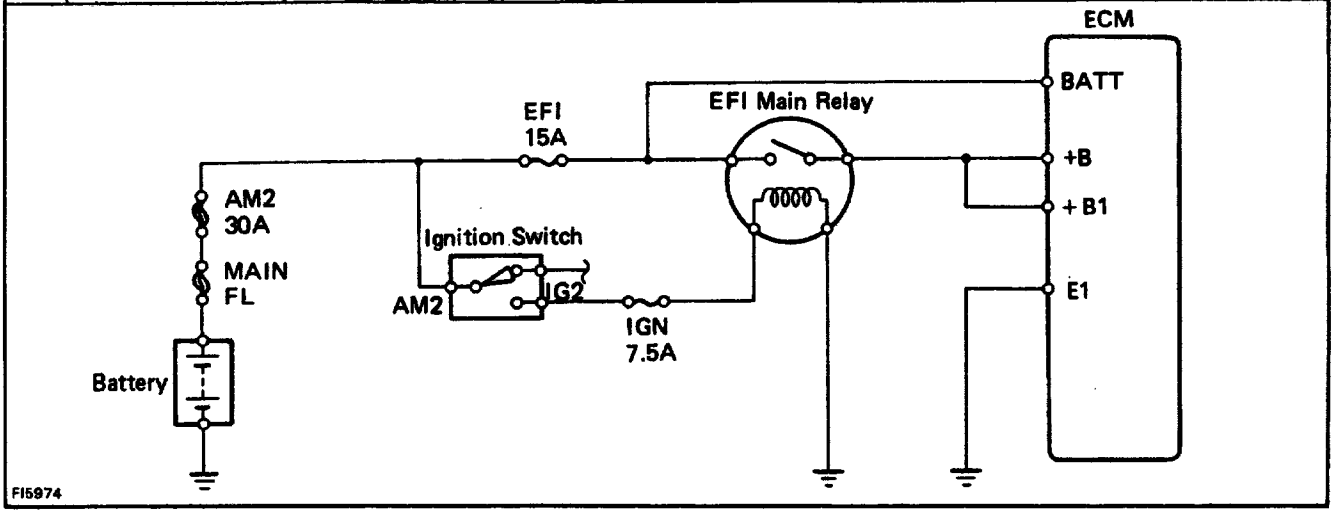

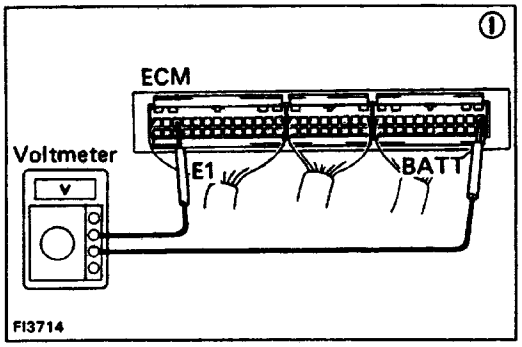

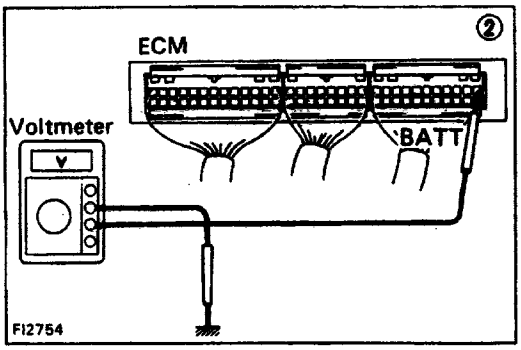

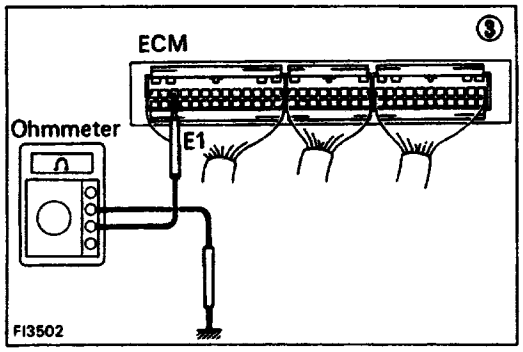

- **BATT –E1**

(1)There is no voltage between ECM terminals BATT and E1.

(2) Check that there is voltage between ECM terminal BATT and body ground.

NO

OK

(3) Check wiring between ECM terminal E1 and body ground.

OK

BAD

Try another ECM.

Repair or replace.

Check fuse and fusible link.

BAD

Replace.

OK

Check wiring between fuse and ECM.

BAD

Repair or replace.

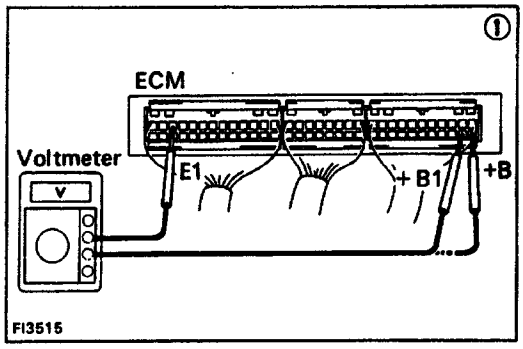

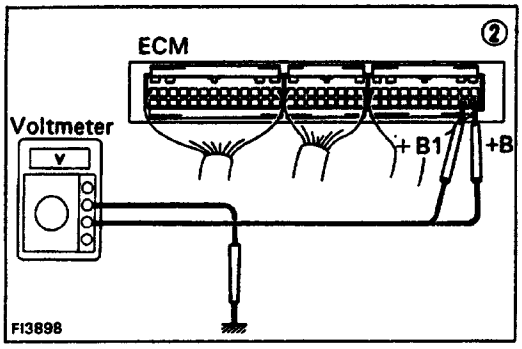

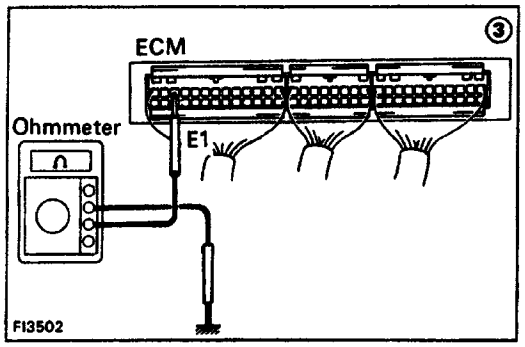

- **+B(+B1)–E1**

(1) There is no voltage between ECM terminals + B (+ B1) and E1. **(IG SW ON)**

(2) Check that there is voltage between ECM terminal + B (+ B1) and body ground. **(IG SW ON)**

NO **OK**

(3)Check wiring between ECM terminal E1 and body ground.

OK BAD

Try another ECM. | Repair or replace.

Check fuse, fusible link and ignition switch. — BAD → Repair or replace.

OK

Check EF I main relay. — BAD → Replace.

OK

Check wiring between EFI main relay and battery. — BAD → Repair or replace.

OK

Check wiring between EFI main relay and ECM terminal + B (+ B1). — BAD → Repair or replace.

No.	Terminals	Trouble	Condition		STD Voltage
2	IDL – E2 (E21)	No voltage	Ignition switch ON	Throttle valve open	9 – 14 V
	VC – E2 (E21)			–	4.5 – 5.5 V
	VTA – E2 (E21)			Throttle valve fully closed (Throttle opener must be cancelled first)	0.3 – 0.8 V
				Throttle valve fully open	3.2 – 4.9 V

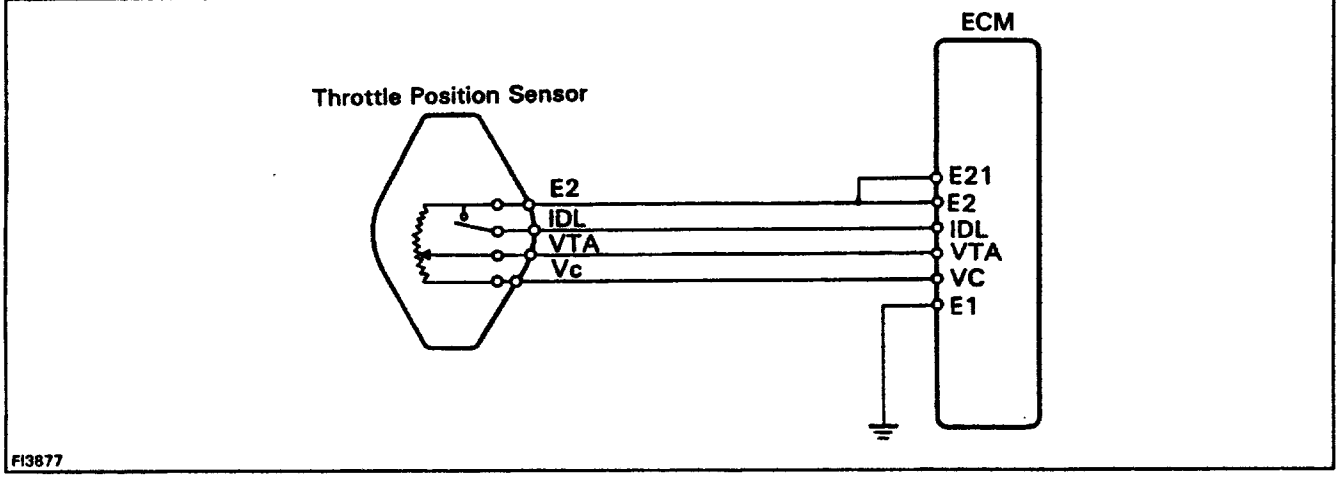

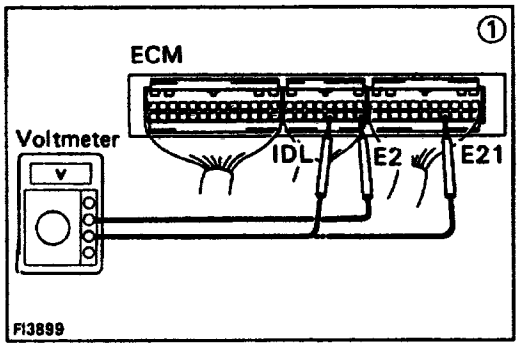

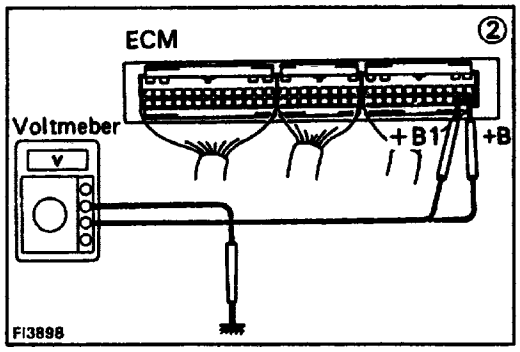

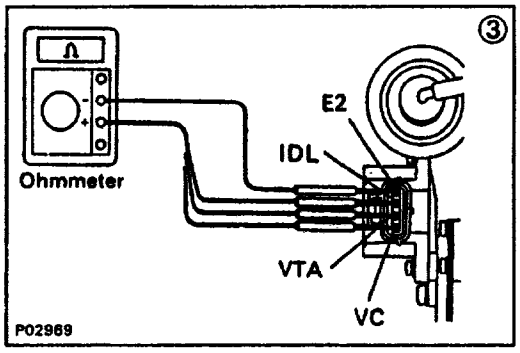

- **IDL – E2 (E21)**

(1) There is no voltage between ECM terminals IDL and E2 (E21).
(IG SW ON) (Throttle valve open)

(2) Check that there is voltage between ECM terminal + B1 (+B) and body ground. **(IG SW ON)**

NO → Refer to No. 1. → BAD → Replace or repair.

OK → Check wiring between ECM terminal E1 and body ground.

BAD → Replace or repair.

OK → (3)Check throttle position sensor.

BAD → Replace or repair throttle position sensor.

OK → Check wiring between ECM and throttle position sensor.

OK → Try another ECM.

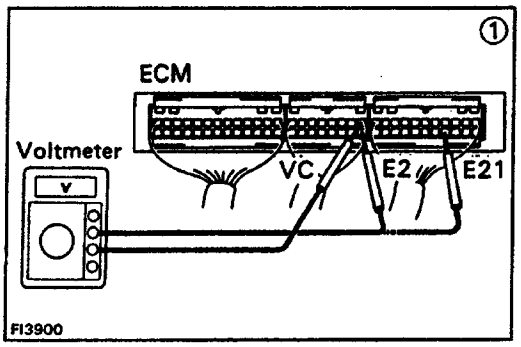

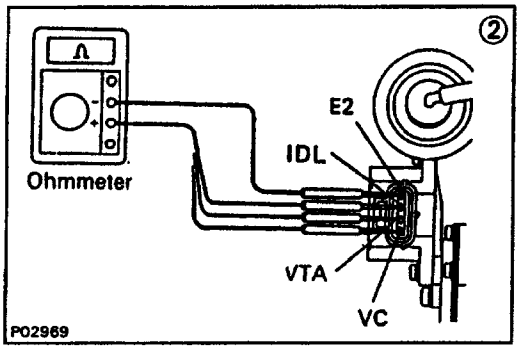

- **VC – E2 (E21)**

(I)There is no voltage between ECM terminals VC and E2 (E21). **(IG SW ON)**

↓

Check that there is voltage between ECM terminals + B1 (+ B) and E1. **(IG SW ON)**

↓ **OK** / **NO** → Refer to No. 1.

↓ M Check throttle position sensor.

↓ BAD → Repair or replace.

↓ **OK**

Check wiring between ECM and throttle position

↓ **OK** / BAD → Repair or replace wiring.

↓ Try another ECM.

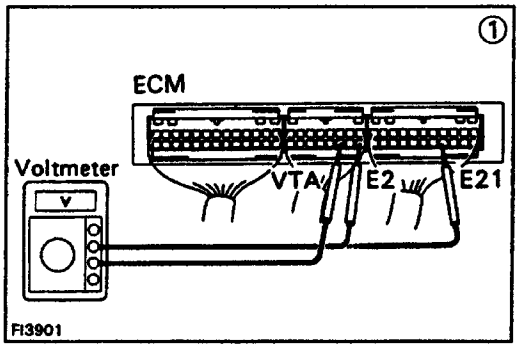

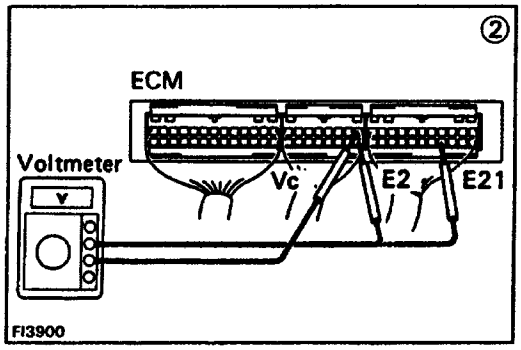

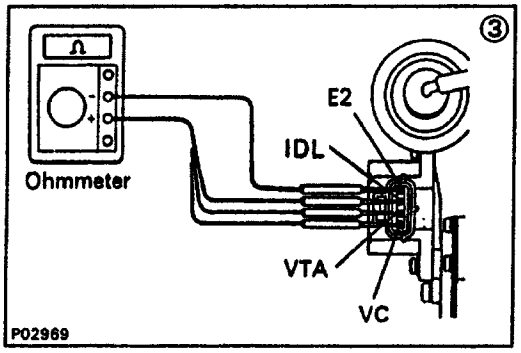

- VTA–E2 (E21)

(1)There is no voltage between ECM terminals VTA and E2 (E21). **(IG SW ON)**

↓

(2) Check that there is voltage between ECM terminals VC and E2 (E21). **(IG SW ON)**

↓ **OK** / **NO** → Perform inspection of VC – E2 (E21).

↓ (3) Check throttle position sensor. BAD → Repair or replace.

↓ **OK**

Check wiring between ECM and throttle position sensor. BAD → Repair or replace.

↓ **OK**

Try another ECM.

No.	Terminals	Trouble	Condition		STD Voltage
3	VC – E2 (E21)	No voltage	Ignition SW ON	–	4.5 – 5.5 V
	VS – E2 (E21)			Measuring plate fully closed	4.0 – 5.5 V
				Measuring plate fully open	0.2 – 0.5 V
			Idling		2.3 – 2.8 V
	THA – E2 (E21)		10 SW ON	Intake air temperature 20°C (68°F)	0.5 – 3.4 V

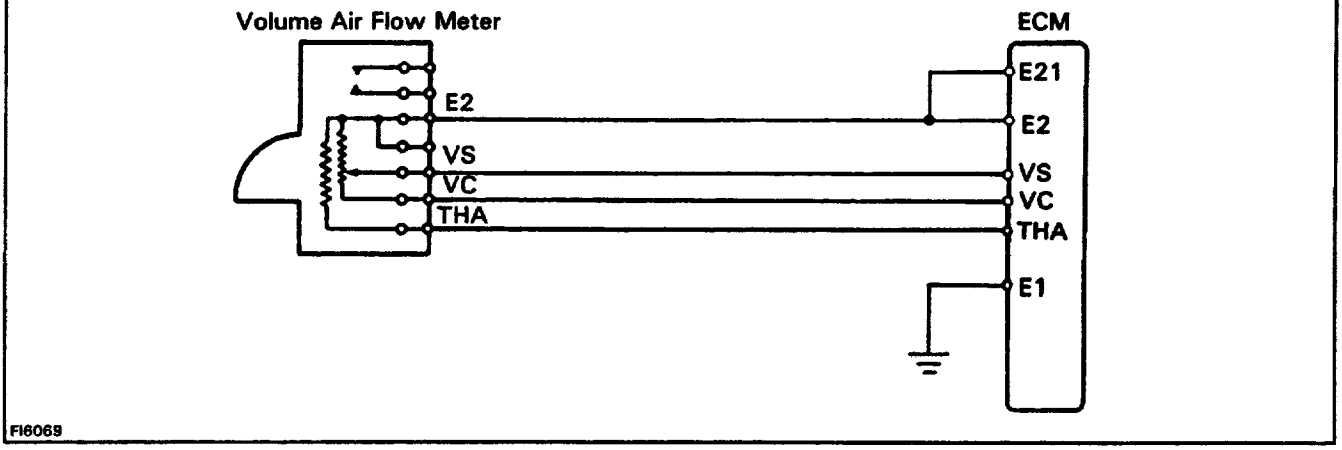

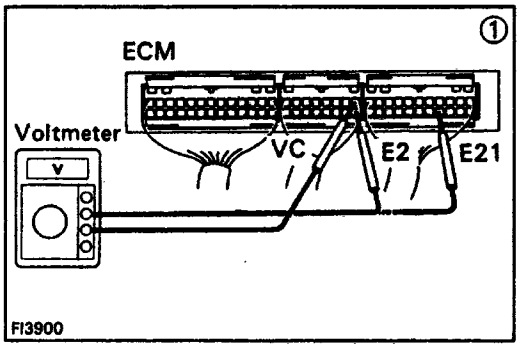

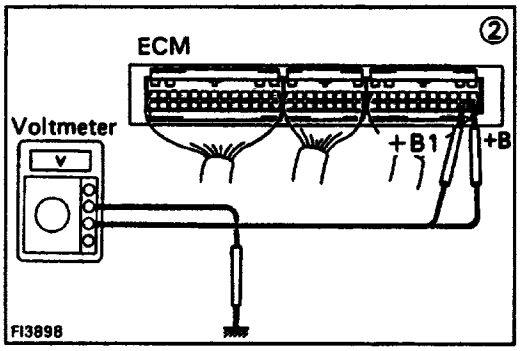

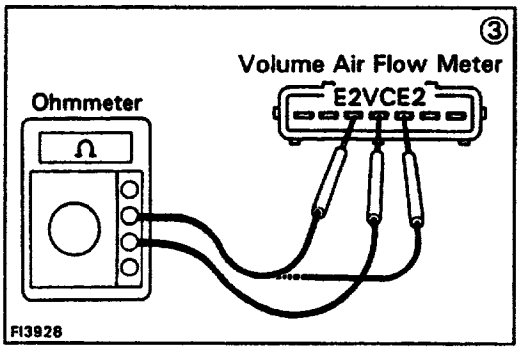

- **VC – E2 (E21)**

(1) There is no voltage between ECM terminals VC and E2 (E21). **(IG SW ON)**

↓

(2)Check that there is voltage between ECM terminal +B (+B1) and body ground. **(IG SW ON)**

↓ **OK** → (3) Check volume air flow meter.

- BAD → Replace or repair volume air flow meter.
- OK → Check wiring between ECM and volume air flow meter.
  - OK → Try another ECM.
  - BAD → Replace or repair wiring.

NO → Refer to No. 1.

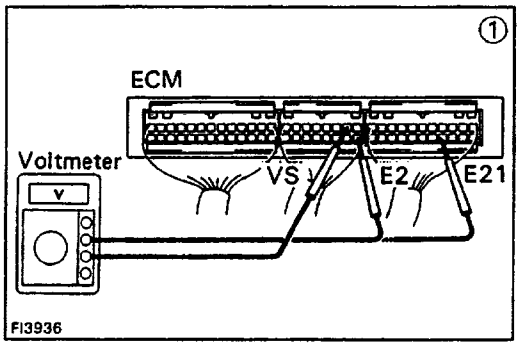

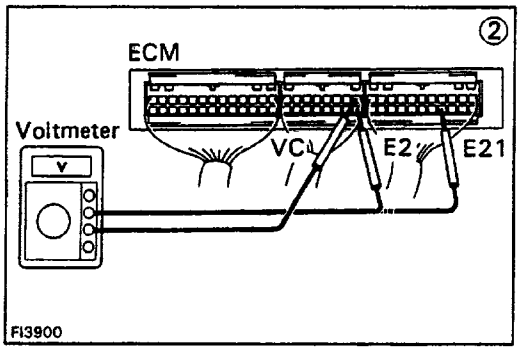

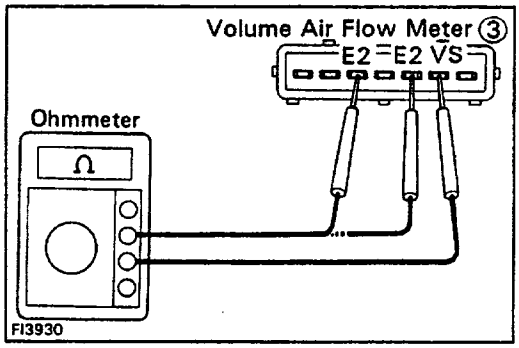

- **VS – E2 (E21)**

(1) There is no voltage between ECM terminals VS and E2 (E21) **(IG SW ON)**

↓

(2) Check that there is voltage between ECM terminals VC and E2 (E21). **(IG SW ON)**

OK ↓ / NO → Refer to VC – E2 (E21) → BAD → Repair or replace.

OK ↓

(3) Check volume air flow meter. → BAD → Repair or replace.

OK ↓

Check wiring between ECM and volume air flow meter. → BAD → Repair or replace.

OK ↓

Try another ECM.

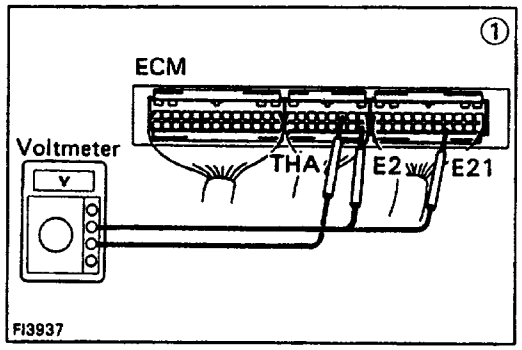

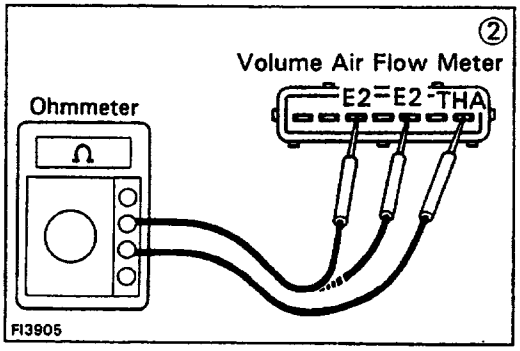

- **THA – E2 (E21)**

(1) There is no voltage between ECM terminals THA and E2 (E21). **(IG SW ON)**

↓

Check that there is voltage between ECM terminal + B (+ B1) and body ground. **(IG SW ON)**

OK ↓ / NO → Refer to No. 1.

(2) Check intake air temp. sensor.

BAD ↓ → Replace volume air flow meter.

OK → Check wiring between ECM and volume air flow meter.

OK ↓ → Try another ECM.

BAD → Repair or replace wiring.

No.	Terminals	Trouble	Condition		STD Voltage
4	THW – E2 (E21)	No volts	Ignition switch ON	Engine coolant temperature 80°C (176°F)	0.2 – 1.0 V

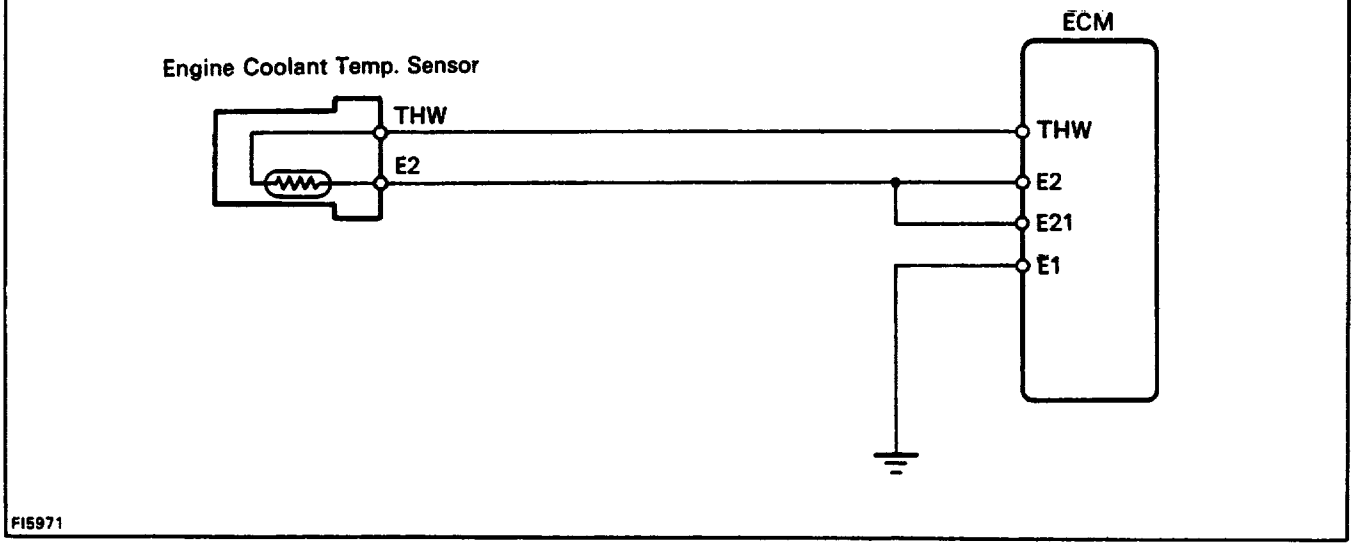

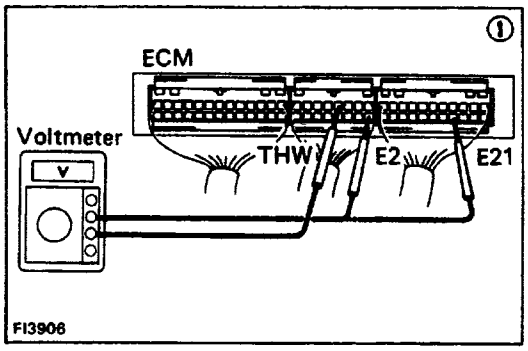

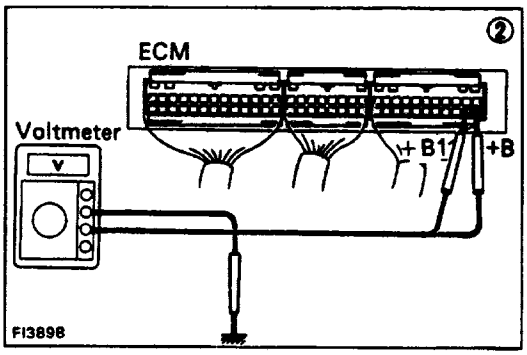

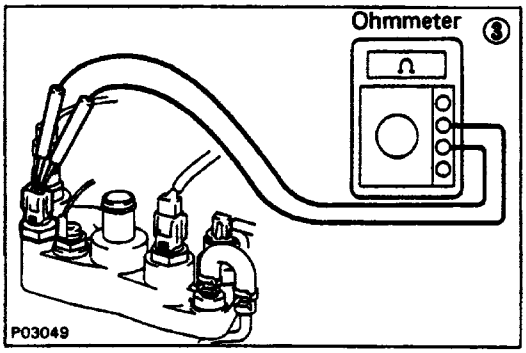

(1) There is no voltage between ECM terminals THW and E2 (E21). **(IG SW ON)**

↓

(2) Check that there is voltage between ECM terminal + B (+B1) and body ground. **(IG SW ON)**

↓ **OK** — **NO** → Refer to No. 1.

↓

Check wiring between ECM terminal E1 and body ground.

↓ **OK** — SAD → Repair or replace.

↓

(3)Check engine coolant temp. sensor.

↓ BAD → Replace engine coolant temp. sensor.

↓ **OK** → Check wiring between ECM and engine coolant temp. sensor.

↓ **OK** → Try another ECM.

BAD → Repair or replace.

No.	Terminals	Trouble	Condition	STD Voltage
5	STA – E1	No voltage	Cranking	6 V or more

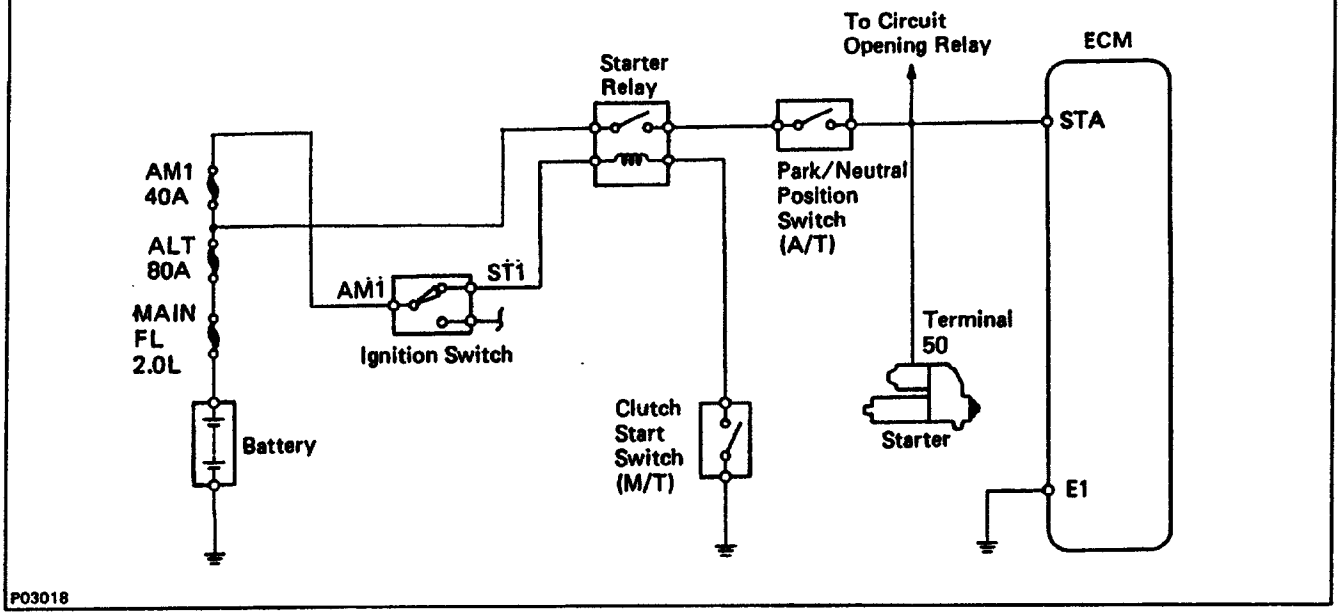

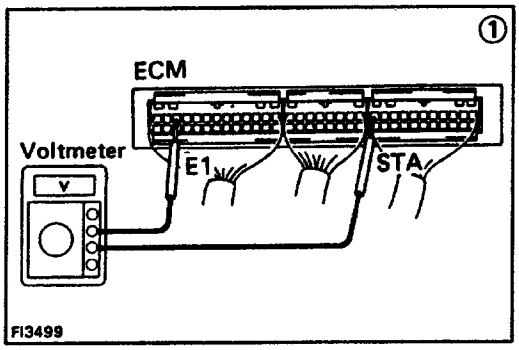

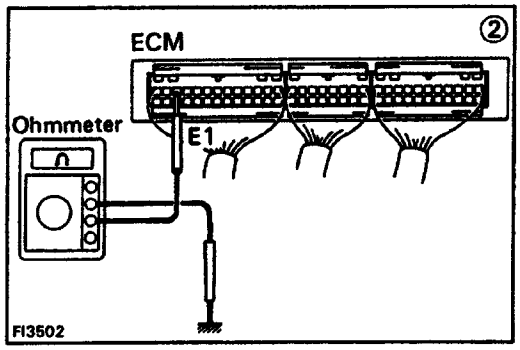

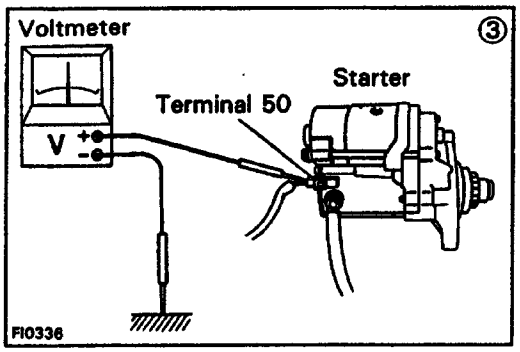

(1) There is no voltage between ECM terminals STA and E1 **(IG SW STAR**T)

Check starter operation. — OK → Check wiring between ECM terminal STA and starter terminal 50.

Check starter operation. — BAD → Check fusible link, battery, wiring and ignition switch.

Check wiring between ECM terminal STA and starter terminal 50. — OK → (2) Check wiring between ECM terminal E1 and body ground.

Check wiring between ECM terminal STA and starter terminal 50. — BAD → Repair or replace.

(2) Check wiring between ECM terminal E1 and body ground. — BAD → Repair or replace.

Check fusible link, battery, wiring and ignition switch. — BAD → Repair or replace.

Check fusible link, battery, wiring and ignition switch. — OK →

(3) Check that there is voltage at terminal 50 of starter.
(IG SW START) STD voltage: 6 V or more

(3) — OK → Check starter.

(3) — NO → Check wiring between ignition switch ST1 terminal and starter terminal 50.

No.	Terminals	Trouble	Condition	STD Voltage
6	# 10 – E01 # 20 – E02	No voltage	Ignition switch ON	9 – 14 V

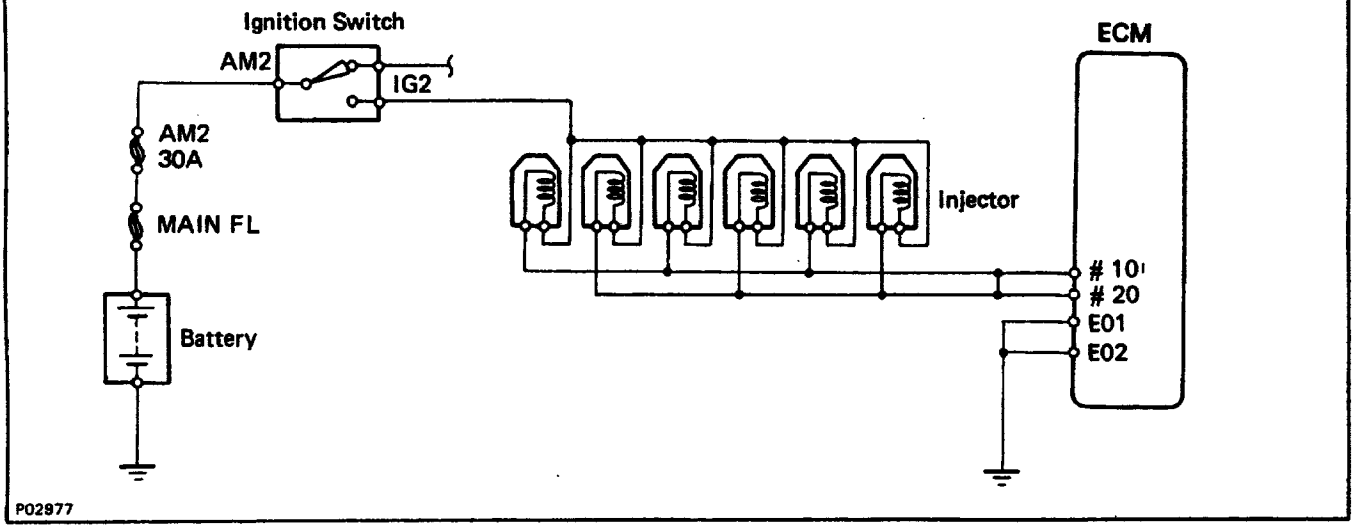

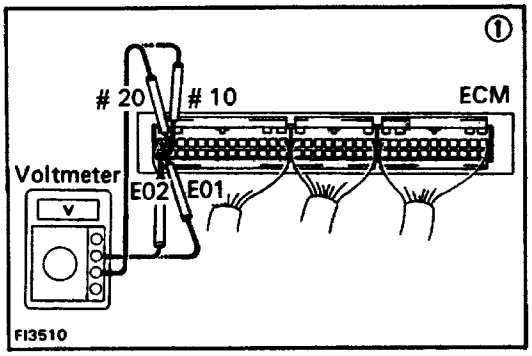

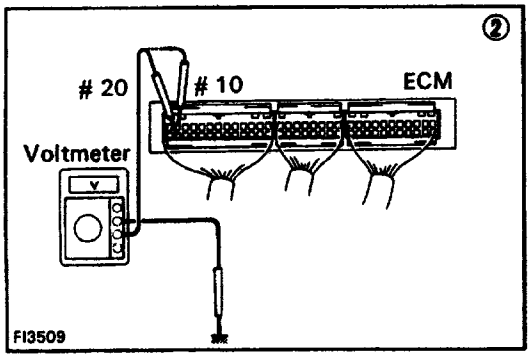

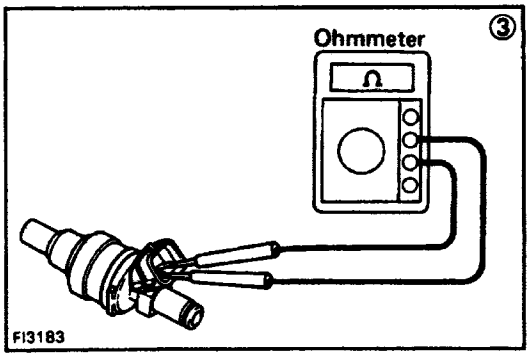

(1) There is no voltage between ECM terminals # 10 and/or # 20 and E01 and/or E02. **(IG SW ON)**

↓

(2) Check that there is voltage between ECM terminal # 10 and/or # 20 and body ground.

↓ NO

OK →

Check wiring between ECM terminal E01 and/or E02 and body ground.

OK →

Try another ECM.

BAD →

Repair or replace.

↓

Check fusible link and ignition switch.

BAD →

Repair or replace.

↓ OK

(3) Check resistance of magnetic coil in each injector
STD resistance: 13.4 – 14.2 Ω

↓ OK

NO →

Replace injector.

↓

Check wiring between ECM terminal # 10 and/or # 20 and battery.

BAD →

Repair or replace.

No.	Terminals	Trouble	Condition	STD Voltage
7	IGT – E1	No voltage	Idling	Pales generation

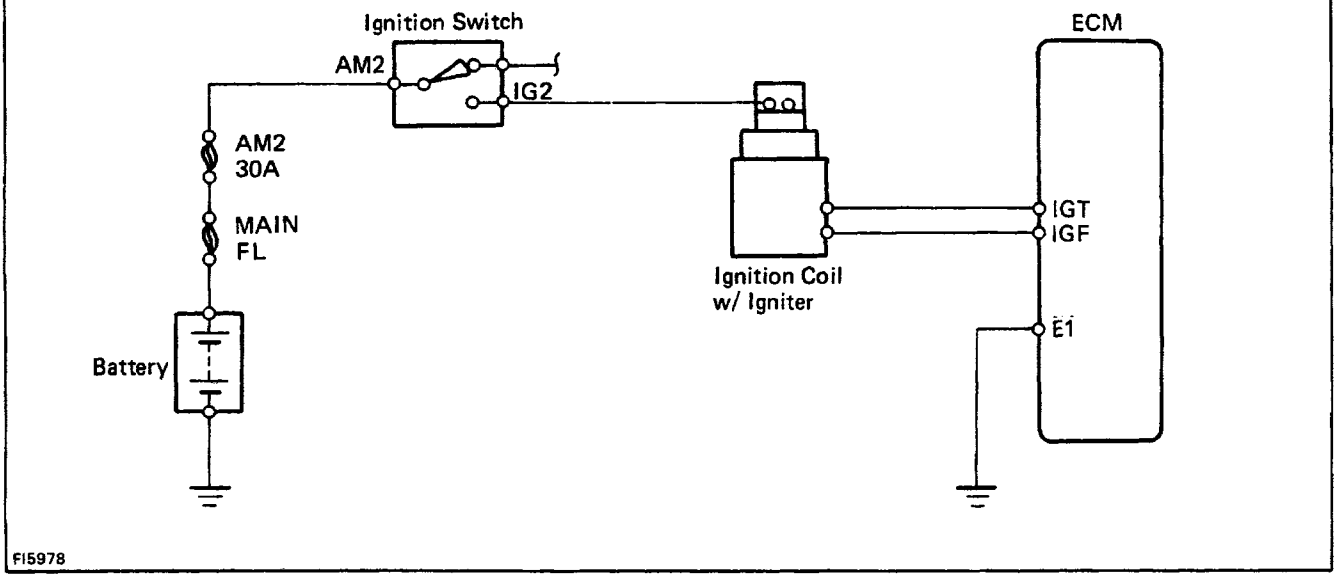

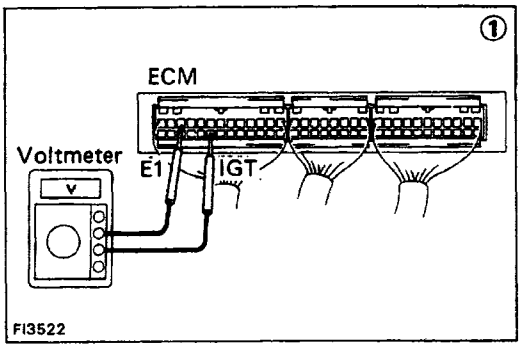

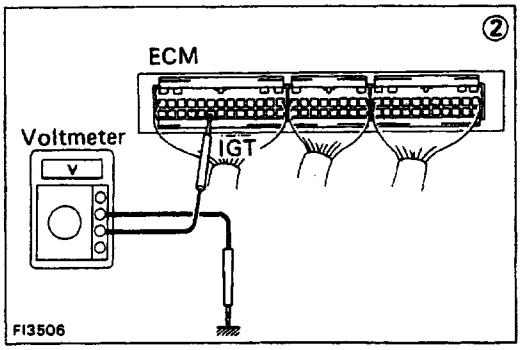

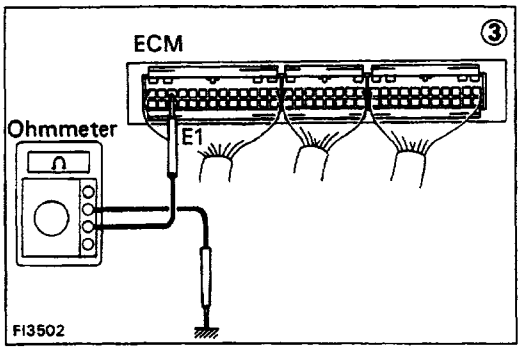

(1) There is no voltage between ECM terminals IGT and E1. **(idling)**

↓

(2) Check that there is voltage between ECM terminal IGT and body ground. **(Idling)**

↓ OK

Check wiring between ECM terminal E1 and body ground.

↓ BAD

Repair or replace.

(2) OK →

Refer to No. 1. → BAD → Repair or replace.

↓ OK

Check wiring between igniter and distributor. → BAD → Repair or replace.

↓ OK

Check distributor. → BAD → Replace.

↓ OK

Check wiring between ECM and igniter. → BAD → Repair or replace.

↓ OK

Check igniter. → BAD → Repair or replace.

↓ OK

Try another ECM.

No.	Terminals	Trouble	Condition	STD Voltage
8	W – E1	No voltage	No trouble (malfunction indicator lamp off) and engine running	9 – 14 V

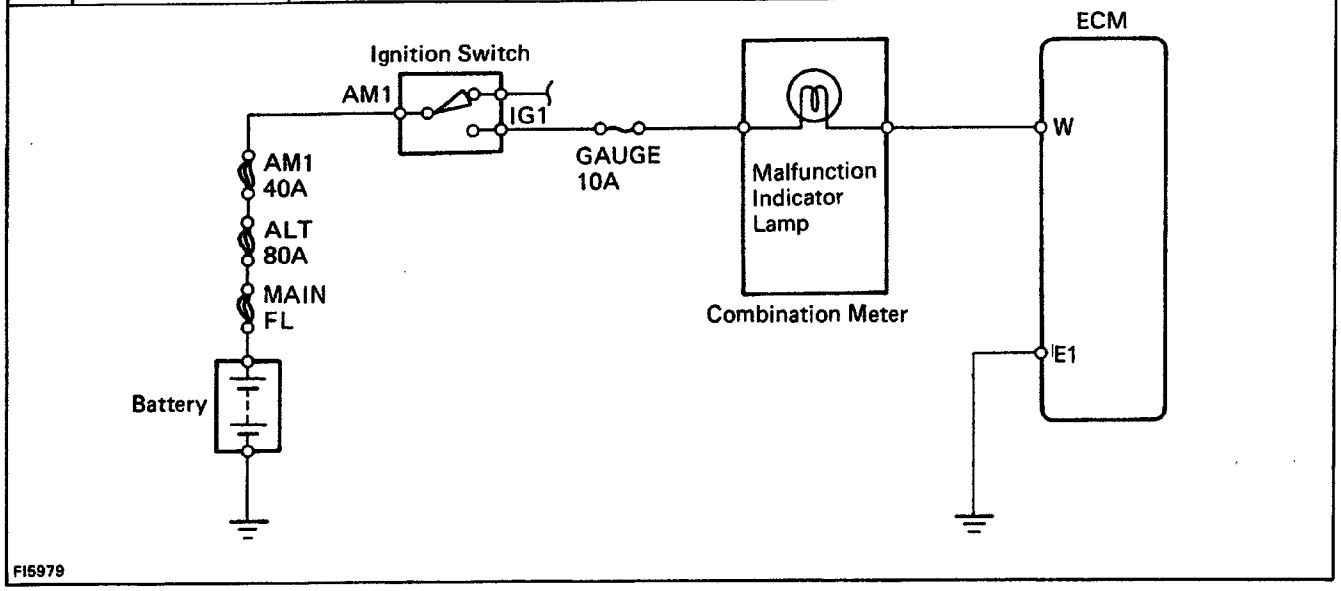

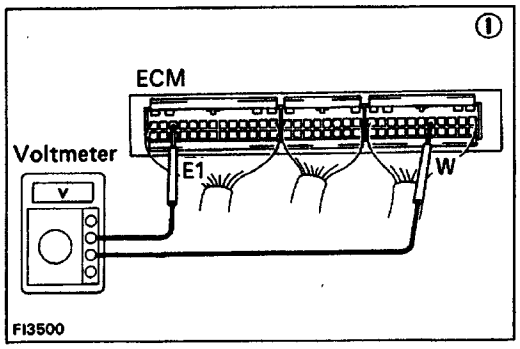

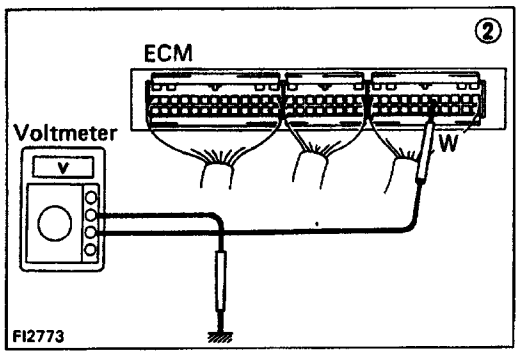

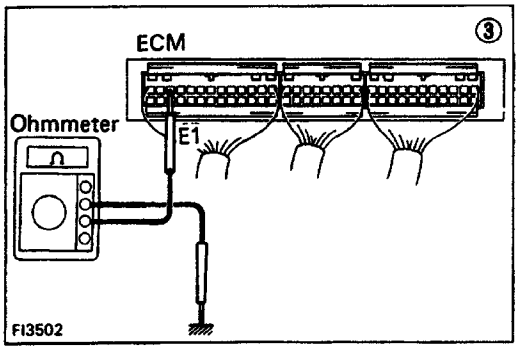

① There is no voltage between ECM terminals W and E1. **(idling)**

② Check that there is voltage between ECM terminal W and body ground.

NO

OK

(3) Check wiring between ECM terminal E1 and body ground.

OK

BAD

Try another ECM.

Repair or replace.

Check GAUGE fuse (10A) and malfunction indicator lamp.

OK

BAD

Repair or replace.

Fuse blows again

Check wiring between ECM terminal W and fuse.

BAD

Repair or replace.

No.	Terminals	Trouble	Condition		STD Voltage
9	STJ – E1	No voltage	Cranking	Engine coolant temperature 80°C (176°F)	6 V or more

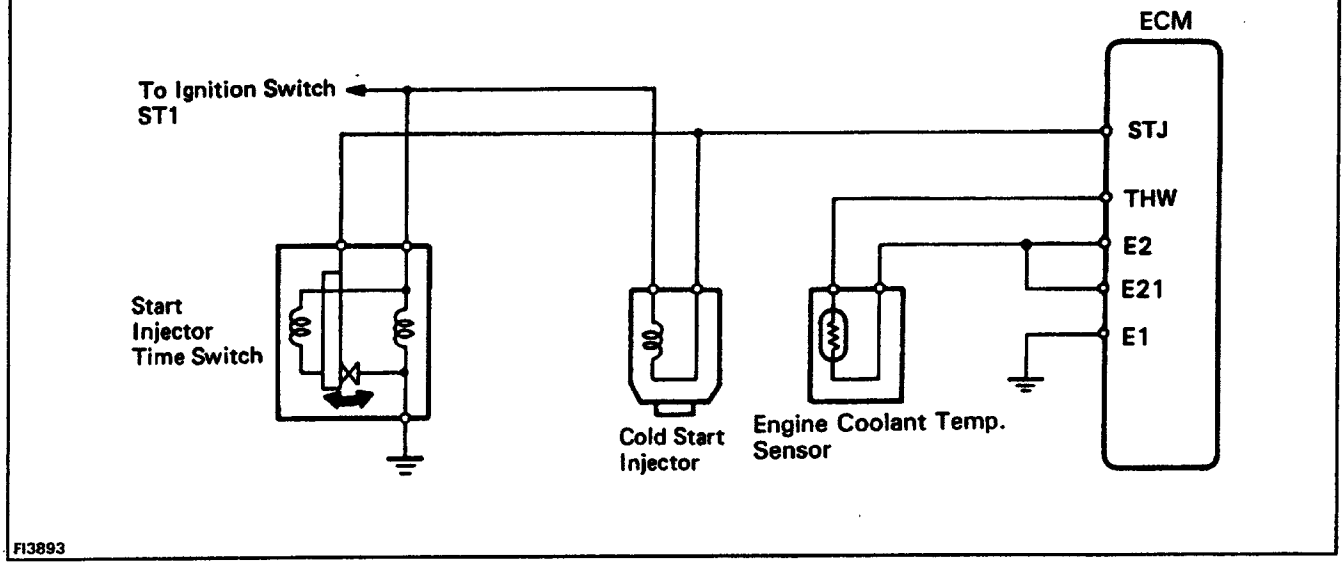

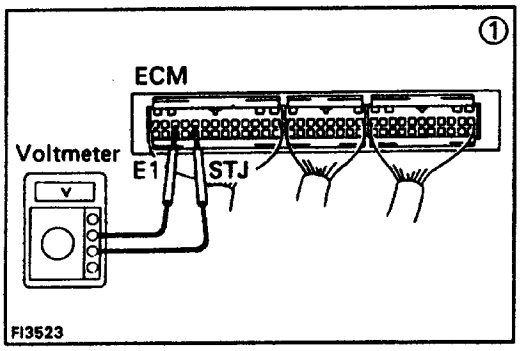

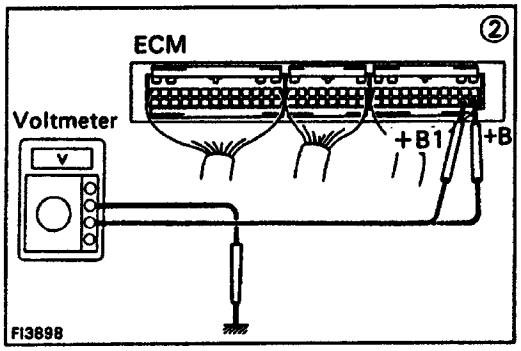

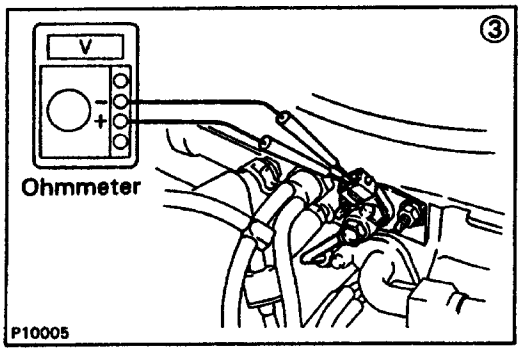

(1)There is no voltage between ECM terminals STJ and E1 **(IG SW START)**

(2) Check that there is voltage between ECM terminal +B (+B1) Wand body ground. **(IG SW ON)**

OK → (3)Check cold start injector

NO → Refer to No. 1.

(3)Check cold start injector

BAD → Replace cold start injector.

OK → Check wiring between ECM and cold start injector.

OK → Check wiring between ECM terminal E1 and body ground.

OK → Try another ECM.

BAD → Repair or replace wiring.

No.	Terminals	Trouble	Condition	STD Voltage
10	STP – E1	No voltage	Stop light switch ON	7.5 – 14 V

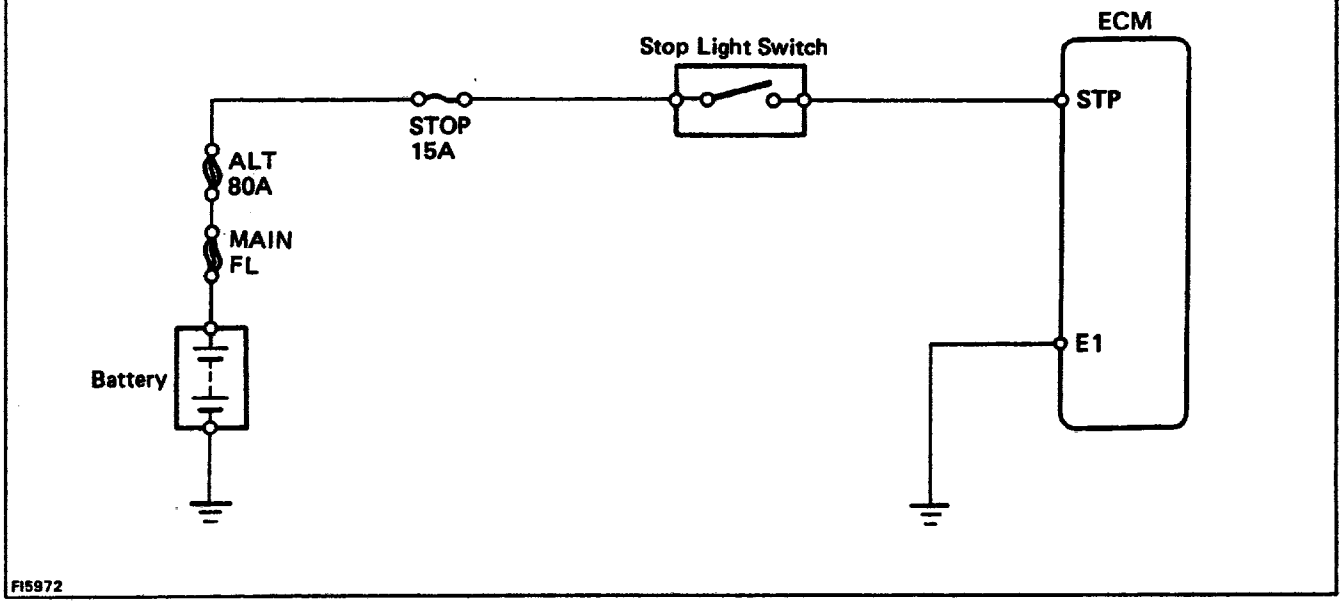

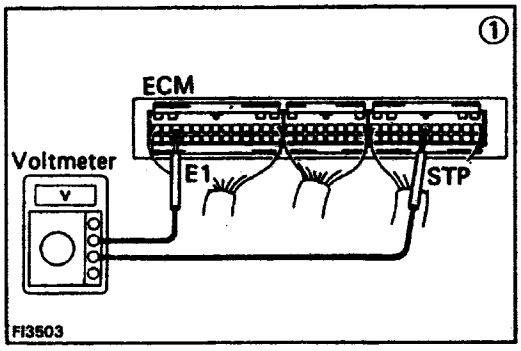

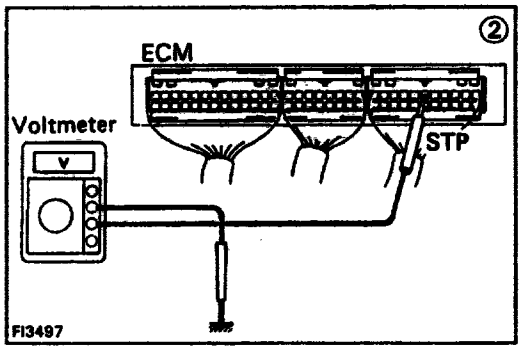

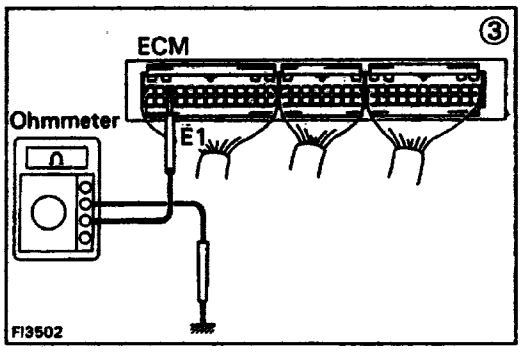

(I)There is no voltage between ECM terminals STP and E1 .

↓

(2)Check that there is voltage between ECM terminal STP and body ground when the brake pedal is depressed:

NO / OK

OK → (3) Check wiring between ECM terminal El and body ground.

OK → Try another ECM.

BAD → Repair or replace.

NO → Check STOP fuse (15 A) and stop light switch.

BAD → Repair or replace.

OK

Check wiring between ECM terminal STP and battery.

BAD → Repair or replace.

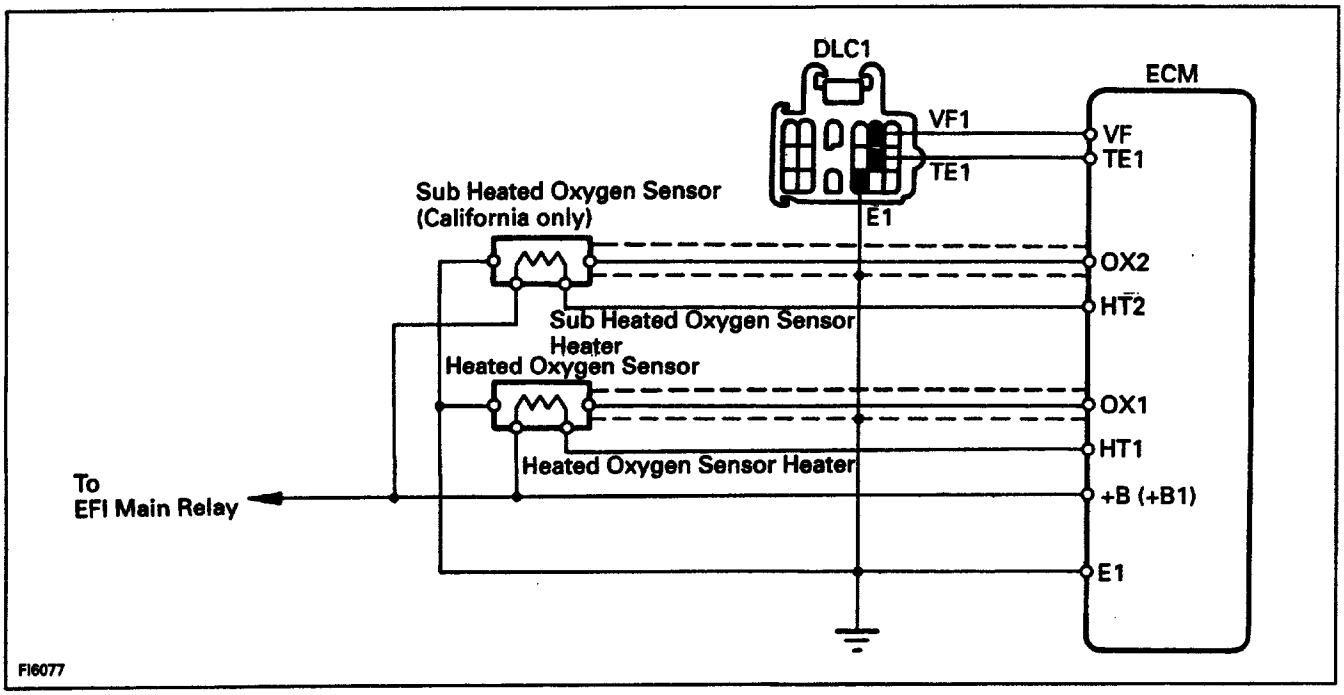

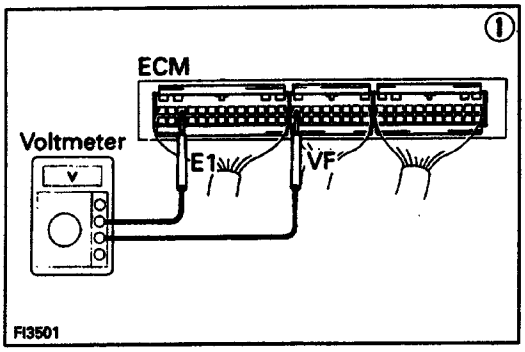

(1) There is no voltage between ECM terminals VF1 and E1.

↓

Check that there is voltage between ECM terminal VF and body ground.

NO ↓ OK

Check wiring between ECM terminal E1 and body ground.

OK ↓ / BAD → Repair or replace.

Try another ECM.

Is air leaking into air induction system? YES → Repair air leak.

NO ↓

Check spark plugs. BAD → Repair or replace.

OK ↓

Check distributor and ignition system. BAD → Repair or replace.

OK ↓

CONTINUED ON PAGE EG2–200

CONTINUED FROM PAGE EG2–199

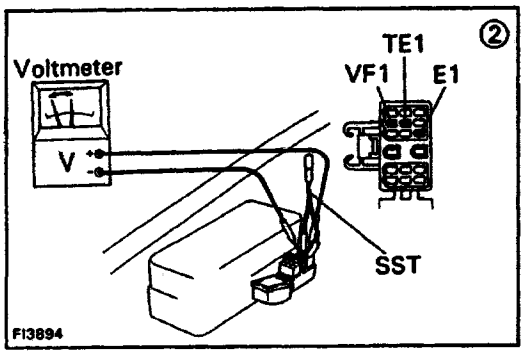

OK

Check fuel pressure. — BAD → Repair or replace.

OK

Check injector. — BAD → Repair or replace.

OK

Check cold start injector.* — BAD → Repair or replace.

OK

Check volume air flow meter. — BAD → Repair or replace.

OK

(1) Check operation of heater oxygen sensor. — OK → System normal.

BAD

Check wiring between heated oxygen sensor and ECM connector. — BAD → Repair wiring.

OK

Replace heated oxygen sensor.

*Rich malfunction only

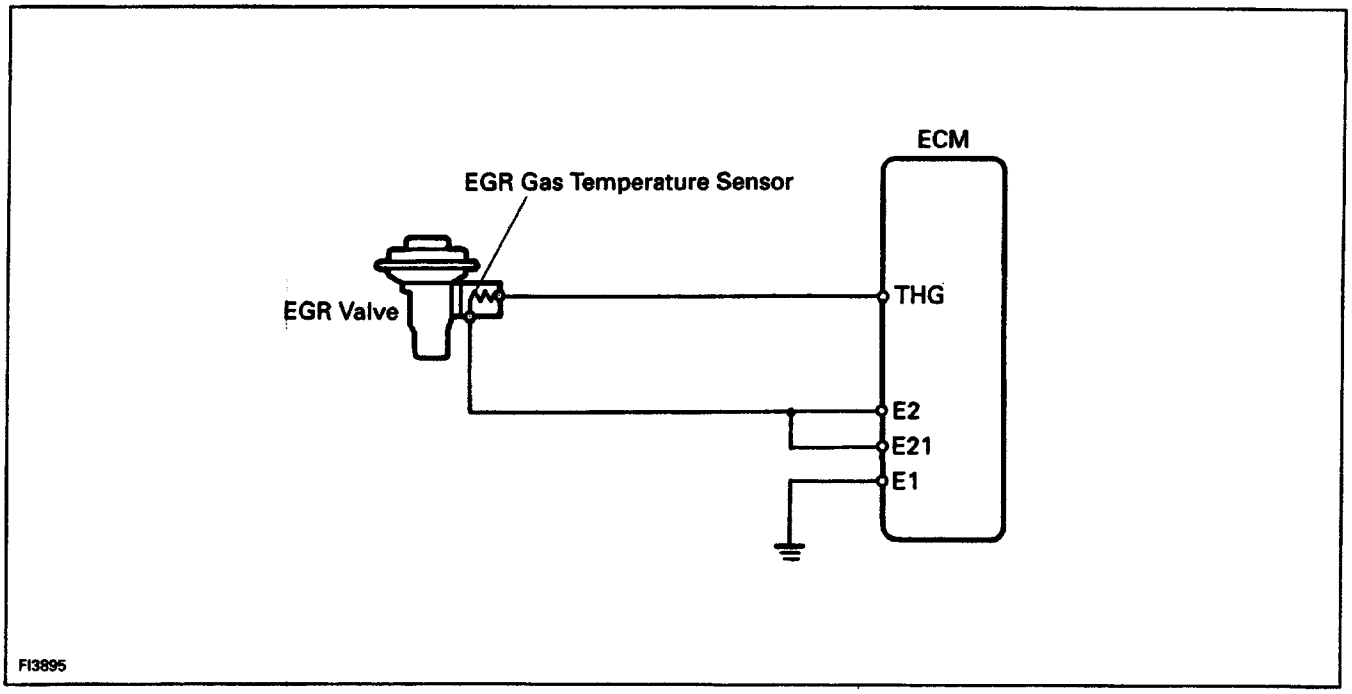

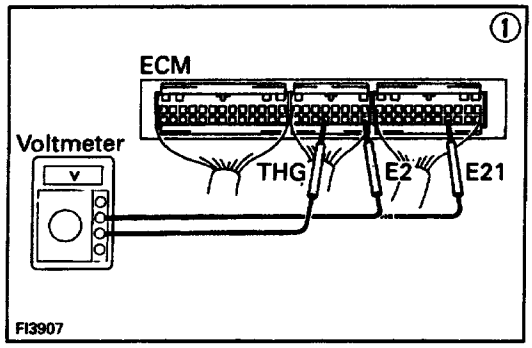

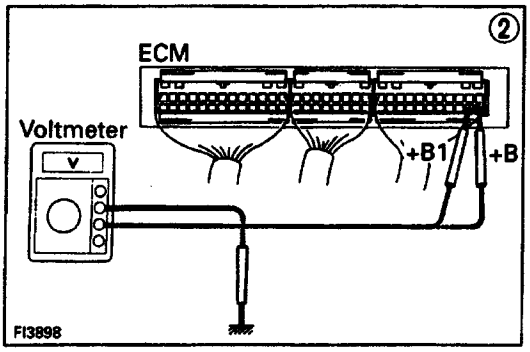

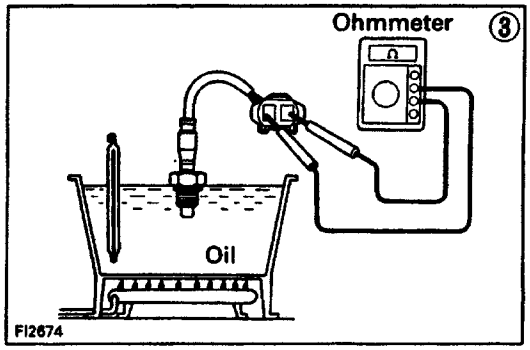

(1) There is no voltage between ECM terminals THG and E2 (E21) **(Engine running at 2,000 rpm)**

(2) Check that there is voltage between ECM terminal +B (+B1) and body ground. **(IG SW ON)**

OK → Check wiring between ECM terminal E1 and body ground.

NO → Refer to No. 1.

OK → Check EGR system.

BAD → Repair or replace.

OK → (3) Check EGR gas temperature sensor.

BAD → Replace EGR gas temperature sensor.

OK → Check wiring between ECM and EGR gas temperature sensor.

OK → Try another ECM.

BAD → Repair or replace.

BAD → Repair or replace.

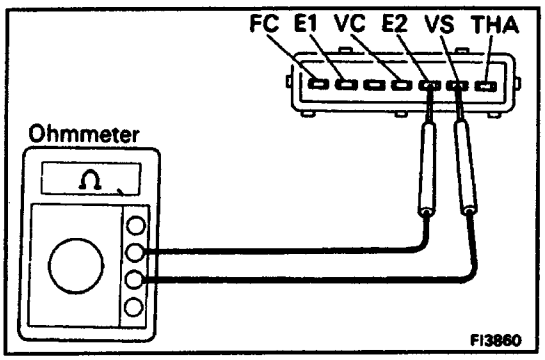

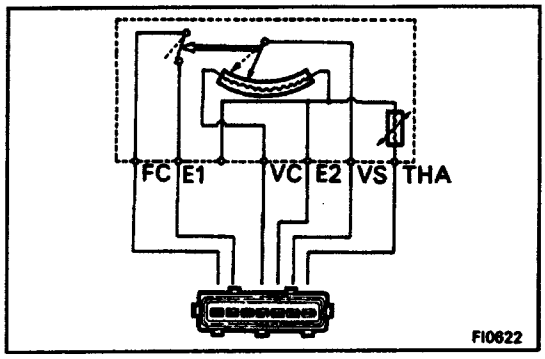

VOLUME AIR FLOW (VAF) METER

ON–VEHICLE INSPECTION

MEASURE RESISTANCE OF VOLUME AIR FLOW (VAF) METER

(a) Disconnect the connector from the VAF meter.

(b) Using an ohmmeter, measure the resistance between each terminal.

Between terminals	Resistance	Temperature
VS – E2	200 – 600 Ω	–
VC – E2	200 – 400 Ω	–
THA – E2	10 – 20 kΩ	–20°C (4°F)
THA – E2	4 – 7 kΩ	0°C (32°F)
THA – E2	2 – 3 kΩ	20°C (68°F)
THA – E2	0.9 – 1.3 kΩ	40°C (104°F)
THA – E2	0.4 – 0.7 kΩ	60°C (140°F)
FC – E1	Infinity	–

If not within specification, replace the VAF meter.

(c) Reconnect the VAF meter connector.

COMPONENTS FOR REMOVAL AND INSTALLATION

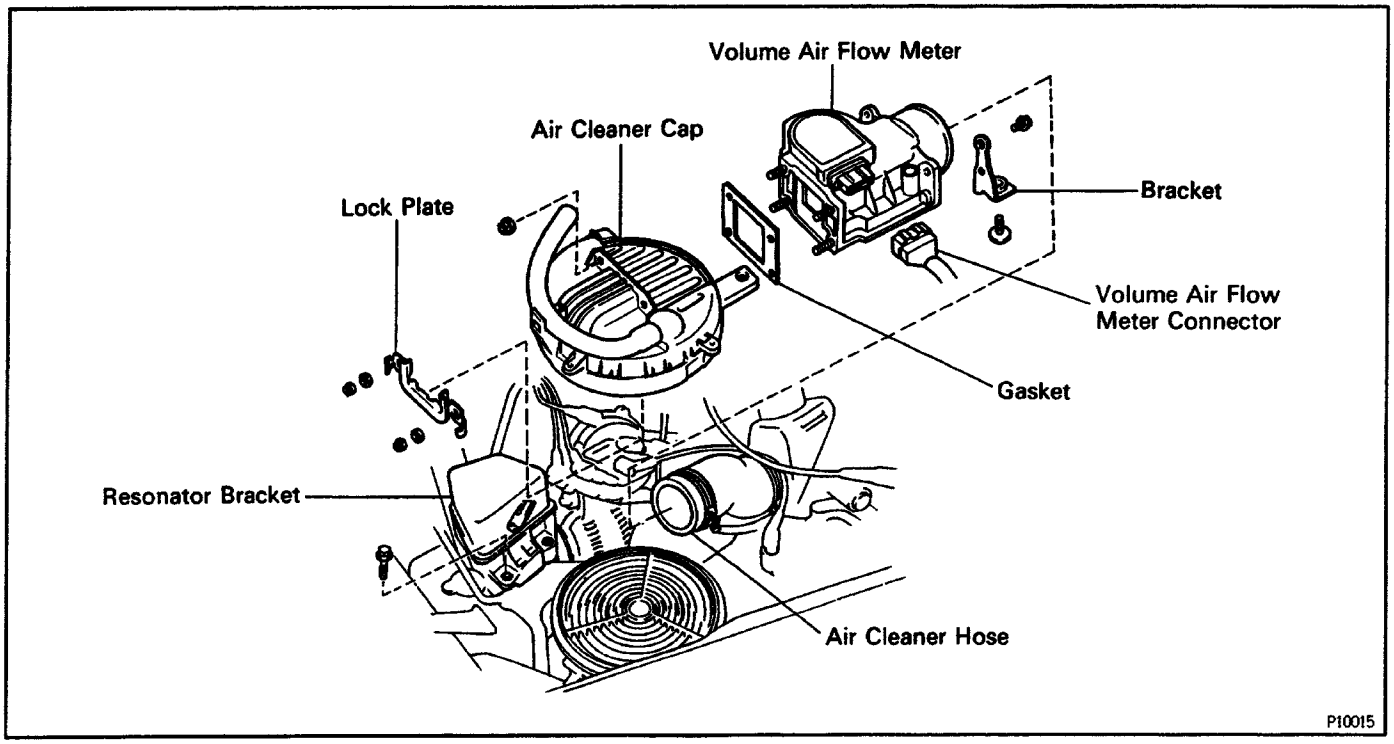

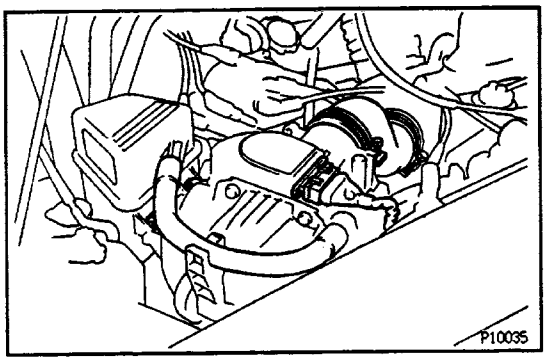

VOLUME AIR FLOW METER REMOVAL

(See Components for Removal Installation)

1. DISCONNECT RESONATOR BRACKET

(a) Disconnect the air hose.

(b) Remove the 2 bolts and resonator bracket.

2. DISCONNECT VOLUME AIR FLOW METER CONNECTOR

3. DISCONNECT AIR CLEANER HOSE

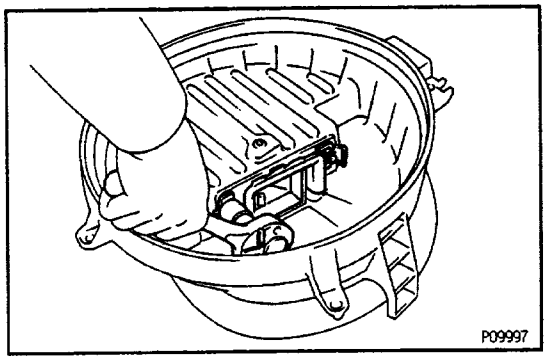

4. REMOVE AIR CLEANER CAP WITH VOLUME AIR FLOW METER ASSEMBLY

6. REMOVE VOLUME AIR FLOW METER FROM AIR CLEANER CAP

(a) Remove the bolt, 2 screws and bracket.

(b) Pry off the lock plate, and remove the 4 nuts and washers, lock plate, VAF meter and gasket.

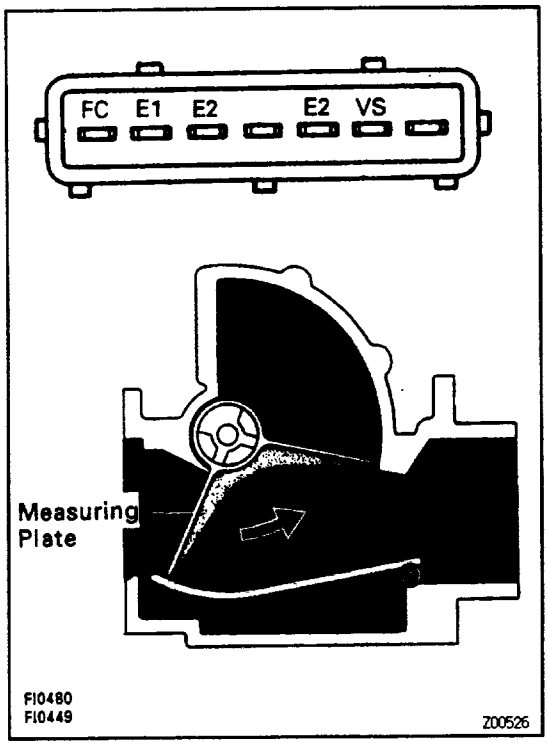

VOLUME AIR FLOW METER INSPECTION

MEASURE RESISTANCE OF VOLUME AIR FLOW METER

Using an ohmmeter, measure the resistance between each terminal by moving the measuring plate.

Between terminals	Resistance (Ω)	Measuring plate opening
E1 – FC	**Infinity**	Fully closed
E1 – FC	**Zero**	Other than closed position
E2 – VS	**200 – 600**	Fully closed
E2 – VS	**20 – 1,200**	Fully open

HINT: Resistance between terminals E2 and VS will change in a wave pattern as the measuring plate slowly opens.

If not within specification, replace the VAF meter.

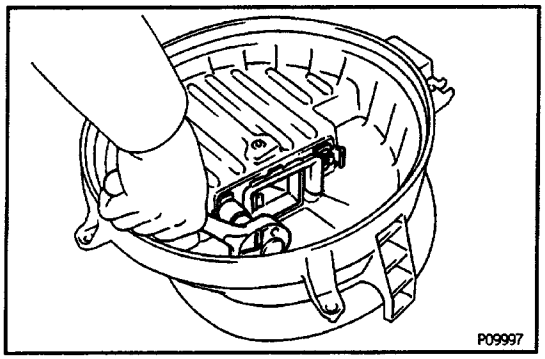

VOLUME AIR FLOW METER INSTALLATION

(See Components for Removal and Installation)

1. INSTALL VOLUME AIR FLOW METER TO AIR CLEANER CAP

(a) Install the VAF meter with the gasket, lock plate, washers and 4 nuts. Pry the lock plate on the nut.

(b) Install the bracket with the bolt and 2 screws.

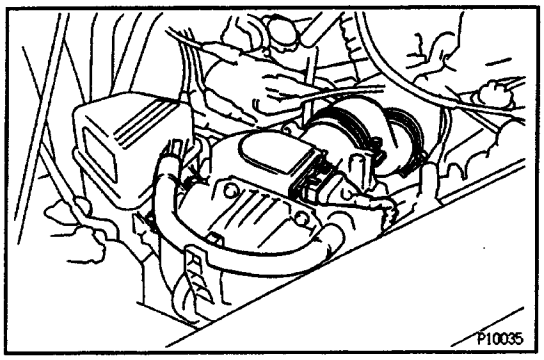

2. INSTALL AIR CLEANER CAP AND VOLUME AIR FLOW METER ASSEMBLY

3. INSTALL AIR CLEANER HOSE

4. CONNECT VOLUME AIR FLOW METER CONNECTOR

5. INSTALL RESONATOR BRACKET

(a) Install the resonator bracket with the 2 bolts.

(b) Connect the air hose.

(3VZ–E)

DESCRIPTION

The ECM is programmed with data for optimum ignition timing under all operating conditions. Using data provided by sensors which monitor various engine functions (RPM, intake air volume, engine coolant temperature, etc.), the microcomputer (ECM) triggers the spark at precisely the right instant.

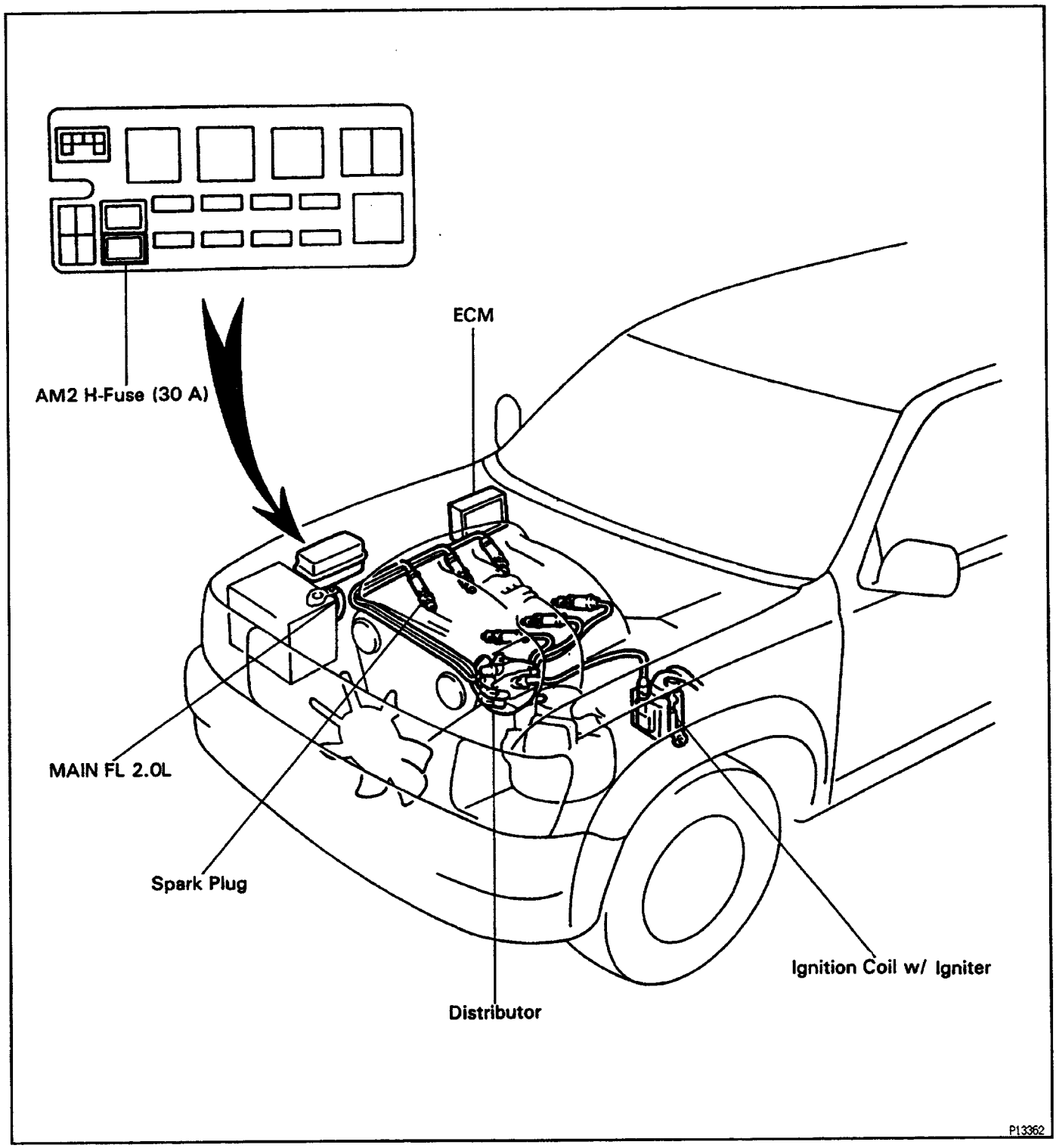

The ECM monitors the engine condition by signals from each sensor, calculates the ignition timing and sends an ignition signal to the igniter. High voltage from the ignition is distributed to each spark plug in the appropriate order to generate a spark between the electrodes, which ignites the air–fuel mixture.

IGNITER

The igniter temporarily interrupts the primary current with the ignition signal (IGT signal) from the ECM and generates sparks at the spark plug. Also, as a fail–safe measure, when ignition occurs an ignition confirmation signal (IGF signal) is sent to the ECM.

IGNITION COIL

The ignition coil uses a closed core coil with the primary coil wrapped around the core and the secondary coil wrapped around the primary coil. This allows the generation of a high voltage sufficient to cause a spark to jump across the spark plug gap.

DISTRIBUTOR

This correctly distributes high voltage to the spark plug of each cylinder in the specified ignition order.

PICKUP COILS

The NE coil detects the crankshaft position, and the G 1 and G2 coils detect the camshaft position.

DISTRIBUTOR

COMPONENTS

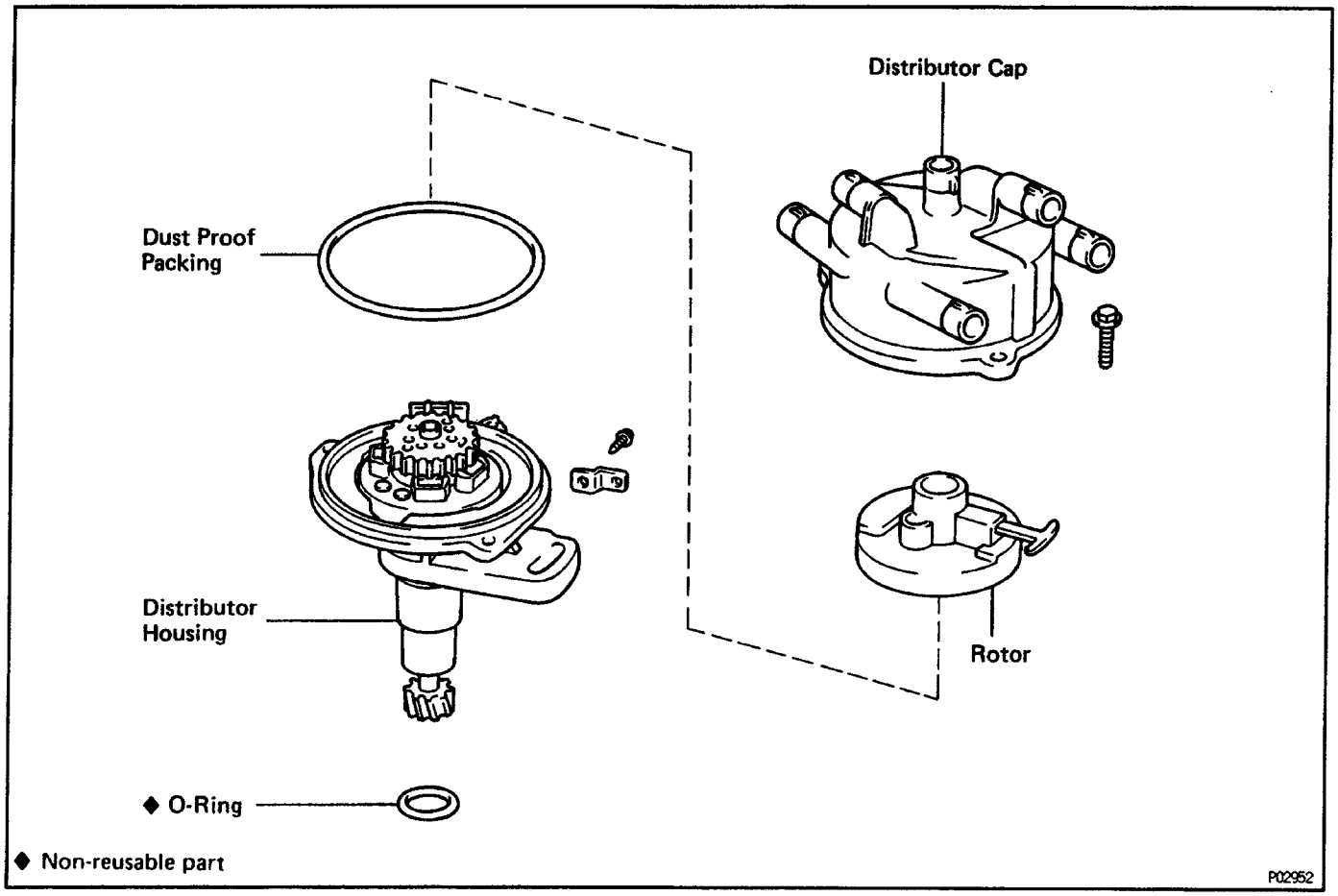

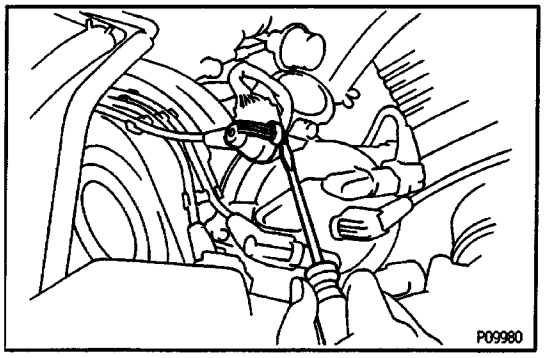

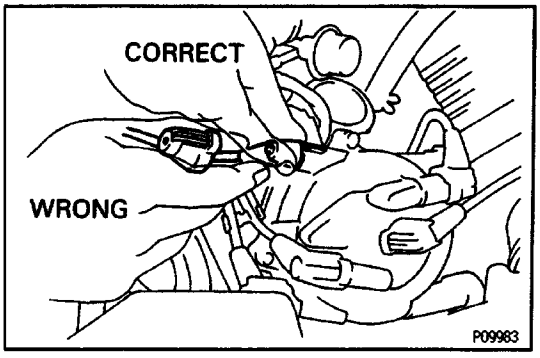

DISTRIBUTOR REMOVAL

1. DISCONNECT HIGH–TENSION CORDS FROM DISTRIBUTOR CAP

(a) Using a screwdriver, lift up the lock claw and disconnect the holder from the distributor cap.

(b) Disconnect the high–tension cord at the grommet. DO NOT pull on the cord.

NOTICE:

- **Pulling on or bending the cords may damage the conductor inside.**
- **Do not wipe any of the oil from the grommet after the high–tension cord is disconnected.**

2. DISCONNECT DISTRIBUTOR CONNECTOR

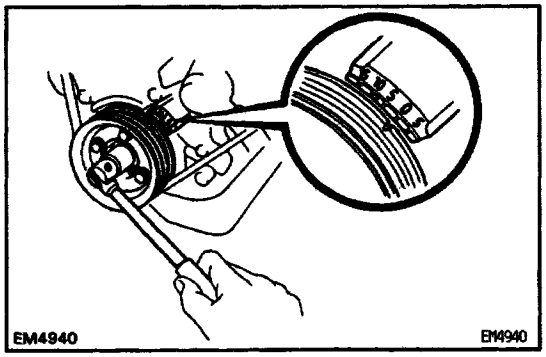

3. REMOVE DISTRIBUTOR CAP AND DUST PROOF PACKING

4. SET NO.1 CYLINDER TO TDC/COMPRESSIoN

(a) Turn the crankshaft pulley until the timing mark is aligned with the '0' mark on the No.1 timing belt cover.

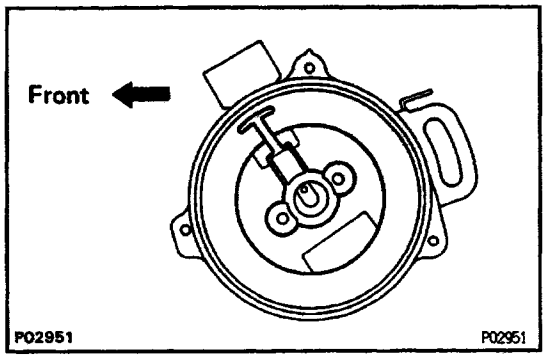

(b) Check that the distributor rotor direction is as shown.

If not, turn the crankshaft pulley one complete revo–lution.

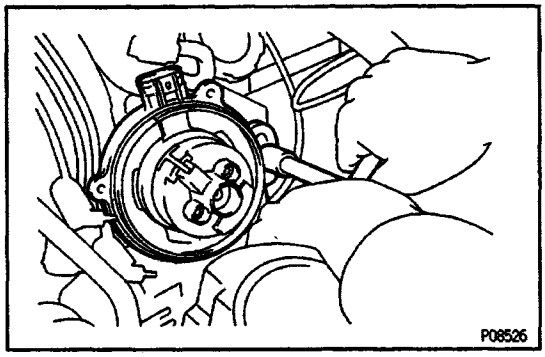

5. REMOVE DISTRIBUTOR

(a) Remove the hold–down bolt.

(b) Pull out the distributor from the cylinder head.

6. REMOVE O–RING

DISTRIBUTOR INSTALLATION

1. CHECK NO.1 CYLINDER TO TDC/COMPRESSION

2. INSTALL DISTRIBUTOR

(a) Install a new 0–ring to the distributor.

HINT: Always use a new 0–ring when installing the distributor.

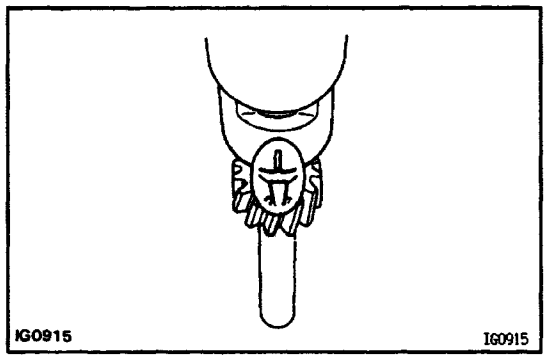

(b) Align the protrusion on the driven gear with the groove of the distributor housing.

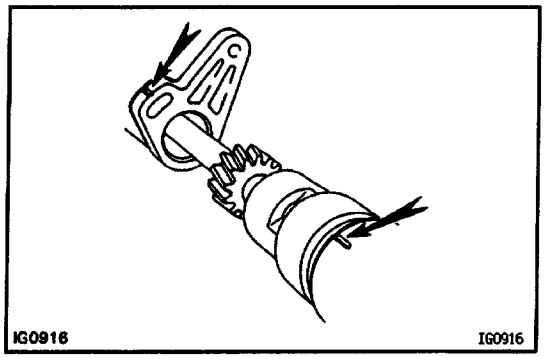

(c) Insert the distributor, aligning the groove of the distributor housing with the groove on the No.4 camshaft bearing cap.

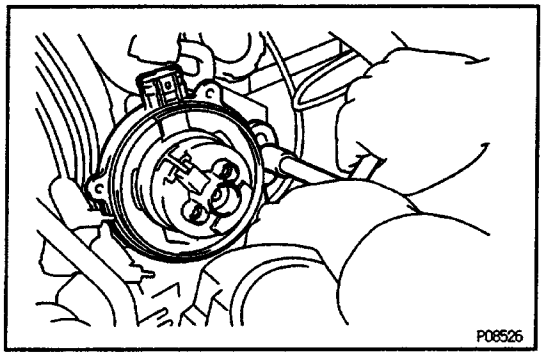

(d) Lightly tighten the hold–down bolt.

3. INSTALL DUST PROOF PACKING AND DISTRIBUTOR CAP

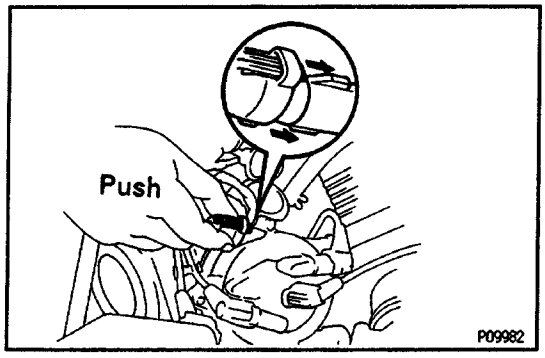

4. CONNECT HIGH–TENSION CORDS TO DISTRIBUTOR CAP

(a) Aline the spline of the distributor cap with the spline groove of the holder, then slide the holder with the grommet onto the distributor cap.

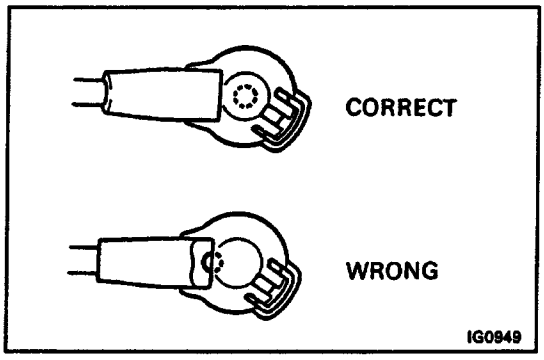

NOTICE: Check that the holder is correctly installed to the grommet and distributor cap as shown in the illustration.

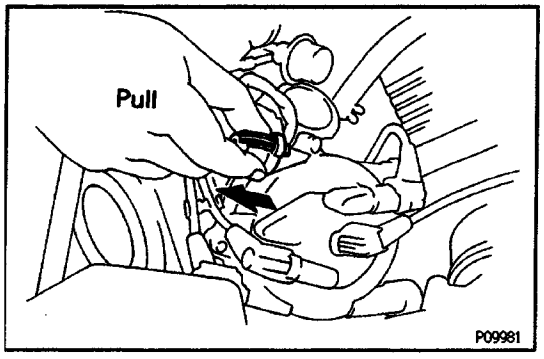

(b) Check that the lock claw of the holder is engaged by lightly pulling the holder.

5. CONNECT DISTRIBUTOR CONNECTOR

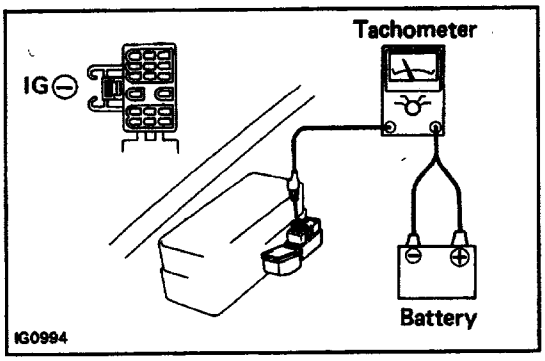

6. WARM UP ENGINE TO NORMAL OPERATING TEMPERATURE

7. CONNECT TACHOMETER AND TIMING LIGHT TO ENGINE

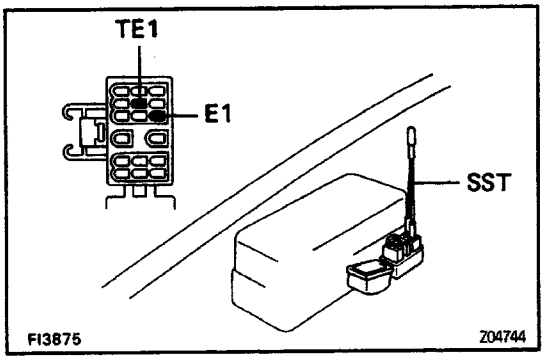

8. ADJUST IGNITION TIMING

(a) Using SST, connect terminals TE1 and E1 of the DLC1.

SST 09843–18020

(b) Check the idle speed.

Idle speed:

800 ± 50 rpm

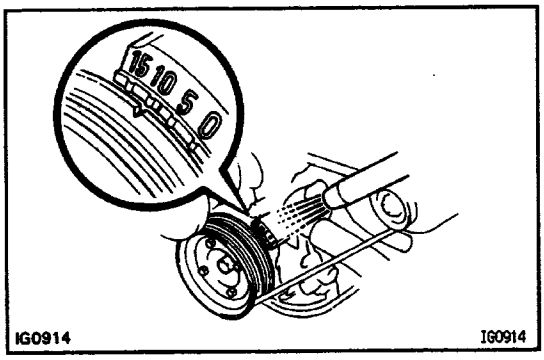

(c) Using a timing light, check the ignition timing.

Ignition timing:

10° BTDC @ idle

(Transmission in neutral position)

(d) Loosen the hold–down bolt, and adjust by turning the distributor.

(e) Tighten the hold –down bolt, and recheck the ignition timing.

Torque: 18 N–(n (185 kgf–cm, 13 ft–lbf)

(f) Remove the SST from the DLC 1.

SST 09843–18020

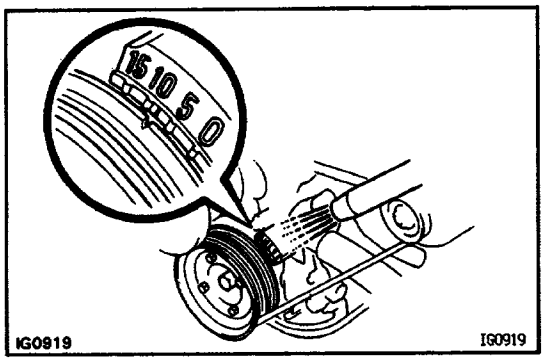

9. FURTHER CHECK IGNITION TIMING

Check that the ignition timing advances.

Ignition timing:

8° BTDC @ Idle

10. DISCONNECT TACHOMETER AND TIMING LIGHT FROM ENGINE

ON–VEHICLE INSPECTION

SPARK TEST

CHECK THAT SPARK OCCURS

(a) Disconnect high–tension cord from the distributor.
(b) Hold the end approx. 12.5 mm (0.50 in.) from engine ground of vehicle.
(c) See if spark occurs while engine is being cranked.

HINT: To prevent gasoline from being injected from injec–tors during this test, crank the engine for no more than 1 – 2 seconds at a time.

If the spark does not occur, test as follows:

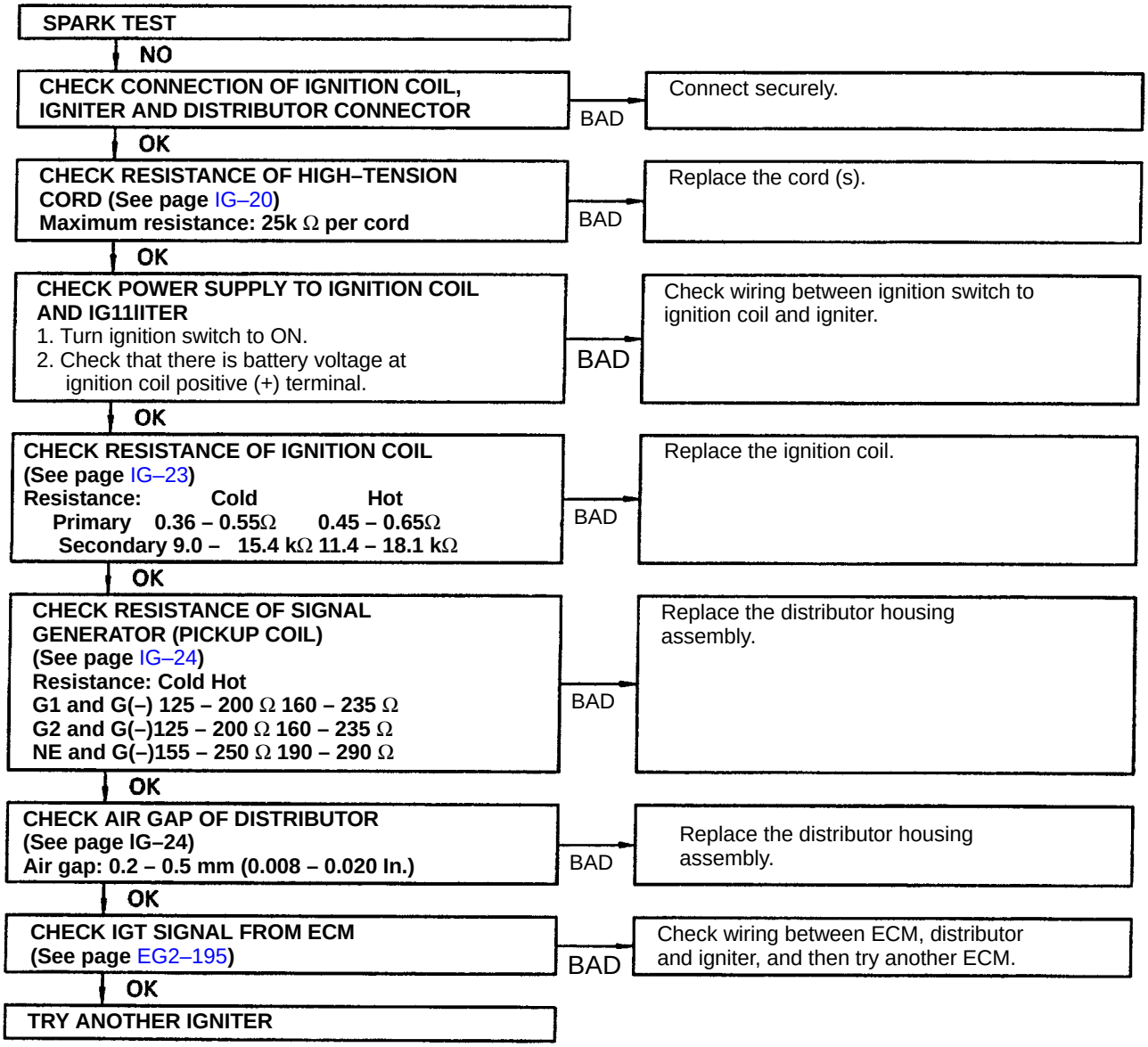

V02128

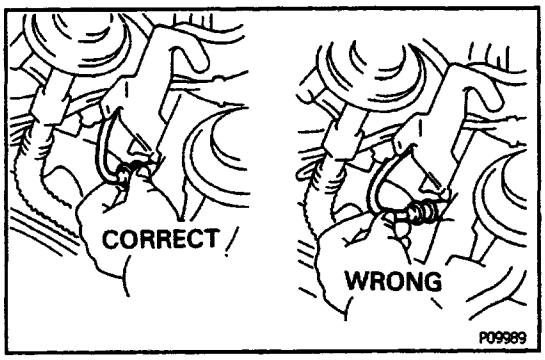

HIGH–TENSION CORDS INSPECTION

1. DISCONNECT HIGH–TENSION CORDS FROM SPARK PLUGS

Disconnect the high – tension cords at the rubber boot.

DO NOT pull on the cords.

NOTICE: Pulling an or banding the cords may damage the conductor inside.

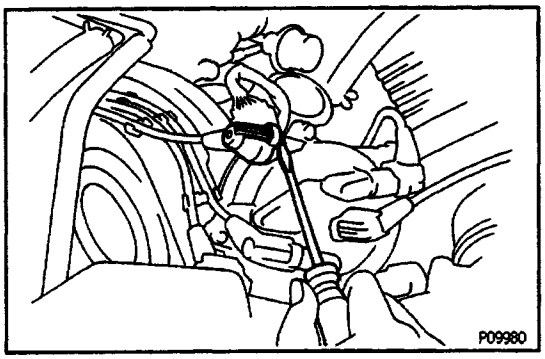

2. DISCONNECT HIGH–TENSION CORDS FROM DISTRIBUTOR CAP AND IGNITION COIL

(a) Using a screwdriver, lift up the lock claw and disconnect the holder from the distributor cap (ignition coil).

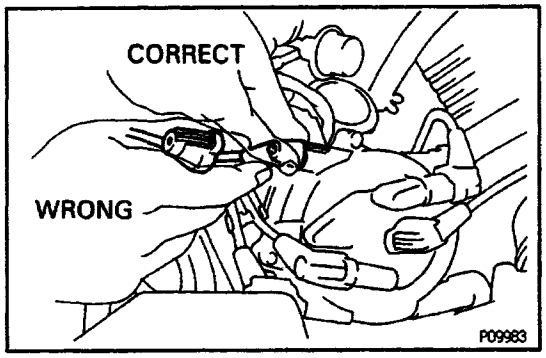

(b) Disconnect the high –tension cord at the grommet. DO NOT pull on the cord.

NOTICE:

- **Pulling on or bending the cords may damage the conductor inside.**
- **Do not wipe any of the oil from the grommet after the high–tension cord is disconnected.**

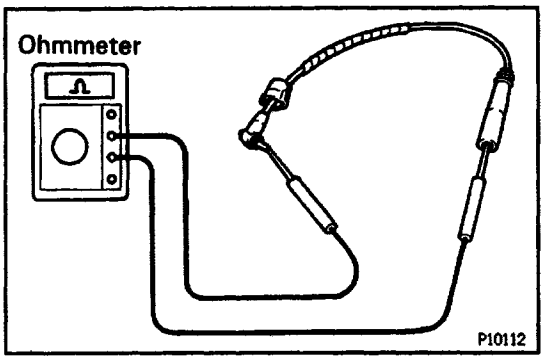

3. INSPECT HIGH–TENSION CORD RESISTANCE

Using an ohmmeter, measure the resistance.

Maximum resistance:

25 kΩ per cord

If the resistance is greater than maximum, check the terminals. If necessary, replace the high – tension cord.

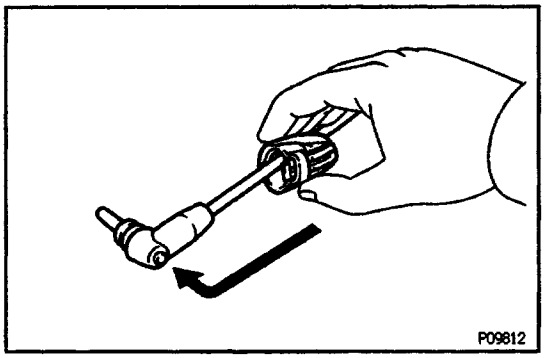

4. RECONNECT HIGH–TENSION CORDS TO DISTRIBUTOR CAP AND IGNITION COIL

(a) Assemble the holder and grommet.

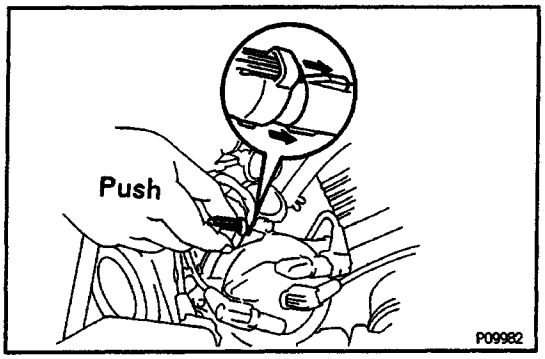

(b) Align the spline of the distributor (ignition coil) with the spline of the holder, and push in the cord.

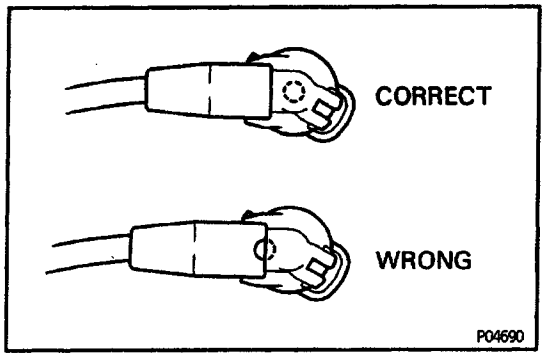

NOTICE: Check that the holder is correctly installed to the grommet and distributor cap a: shown in the il-tustration.

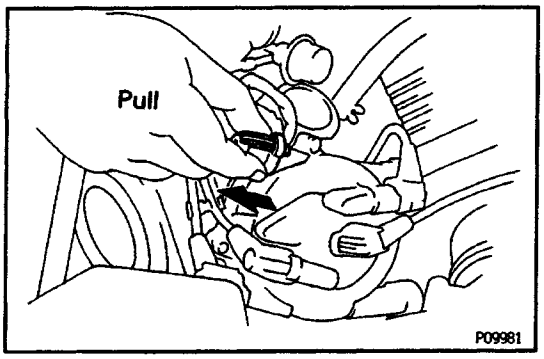

(c) Check that the lock claw of the holder is engaged by lightly pulling the holder.

5. RECONNECT HIGH–TENSION CORDS TO SPARK PLUGS

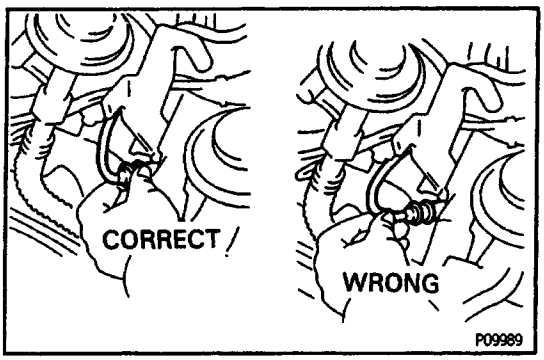

SPARK PLUGS INSPECTION

1. DISCONNECT HIGH–TENSION CORDS FROM SPARK PLUGS

Disconnect the high – tension cords at the rubber boot. Do not pull on the cords.

NOTICE: Pulling on or bearing the cords may damage the conductor inside.

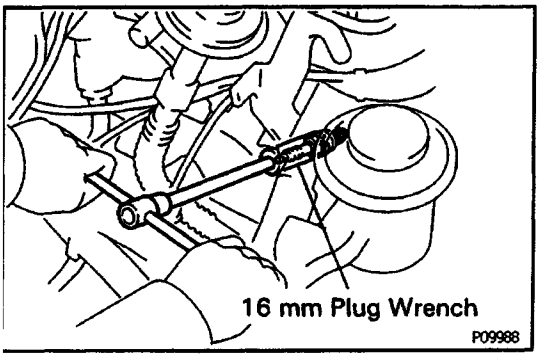

2. REMOVE SPARK PLUGS

Using a 16 mm plug wrench, remove the6 spark plugs.

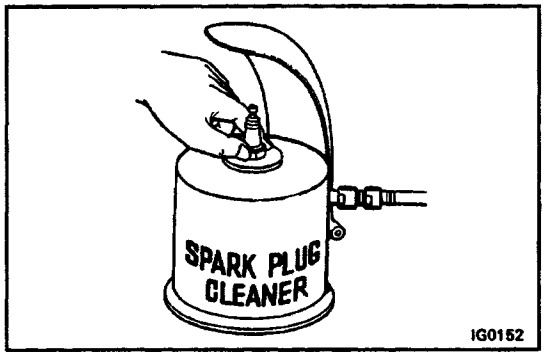

3. CLEAN SPARK PLUGS

Using a spark plug cleaner or wire brush, clean the spark plug.

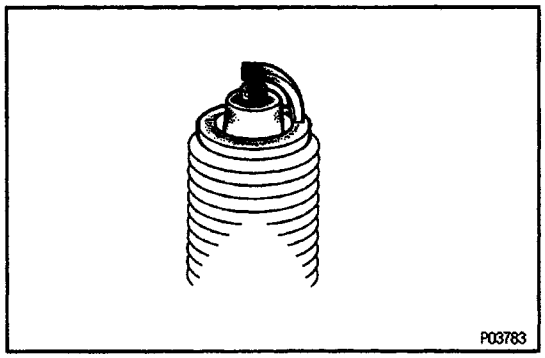

4. VISUALLY INSPECT SPARK PLUGS

Check the spark plug for electrode wear, thread damage and insulator damage.

If abnormal, replace the spark plug.

Recommended spark plug:

ND

K16R– U

NGK

BKR5EYA

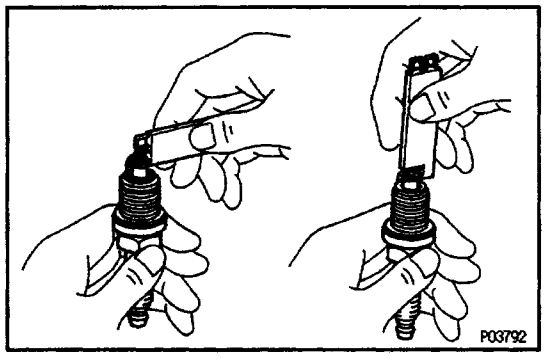

5. ADJUST ELECTRODE GAP

Carefully bend the outer electrode to obtain the correct electrode gap.

Correct electrode gap:

0.8 mm (0.031 in.)

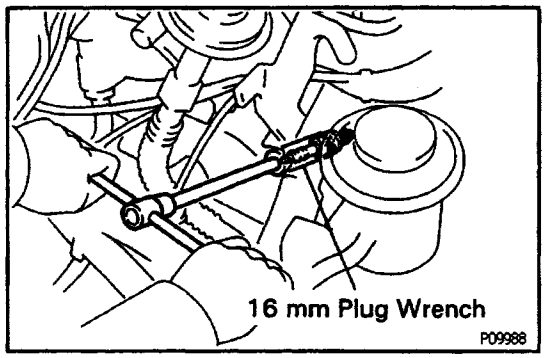

6. INSTALL SPARK PLUGS

Using a 16 mm plug wrench, install and torque the6 spark plugs.

Torque: 18 N–m (18fl kgf–cm, 13 ft–lbf)

7. RECONNECT HIGH–TENSION CORDS TO SPARK PLUGS

IGNITION COIL INSPECTION

NOTICE: 'Cold' and 'Hot' in the following sentences express the temperature of the coils themselves. 'Cold' is from –10˚C (14˚F) to 50˚C (122˚F) and 'Hot' is from 50˚C (22˚F) to 100˚C (212˚F).

1. DISCONNECT IGNITION COIL CONNECTOR

2. DISCONNECT HIGH–TENSION CORD

3. CLEAN COIL AND CHECK FOLLOWING:

(a) Check for cracks or damage.

(b) Check the terminals for carbon tracks.

(c) Check the high–tension cord hole for carbon deposits and corrosion.

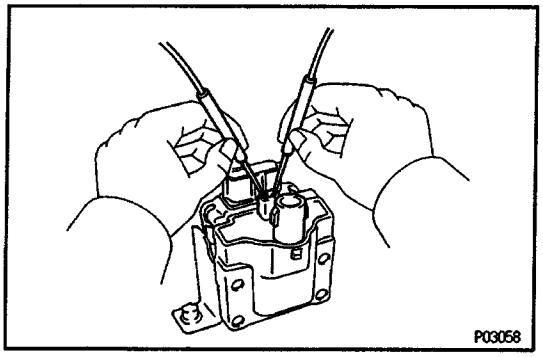

4. INSPECT PRIMARY COIL RESISTANCE

Using an ohmmeter, measure the resistance between the positive (+) and negative (–) terminals.

Primary coil resistance (Cold):

0.36–0–550

Primary coil resistance (Hot):

0.45–0–650

If the resistance is not as specified, replace the ignition coil.

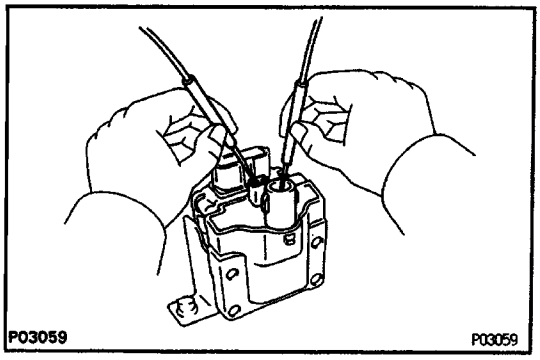

5. INSPECT SECONDARY COIL RESISTANCE

Using an ohmmeter, measure the resistance between the positive (+) terminal and high–tension terminal.

Secondary coil resistance (Cold):

9.0 – 15.4 kΩ

Secondary coil resistance (Hot):

11.4 – 18.1 kΩ

If the resistance is not as specified, replace the ignition coil.

6. RECONNECT HIGH–TENSION CORD

7. RECONNECT IGNITION COIL CONNECTOR

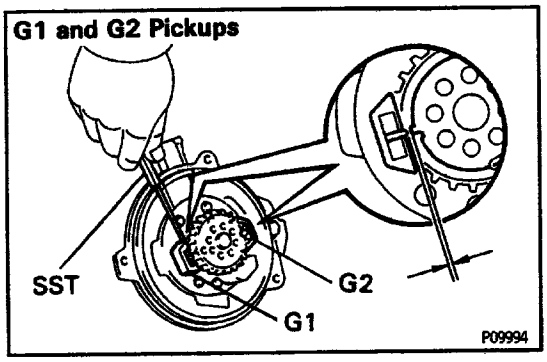

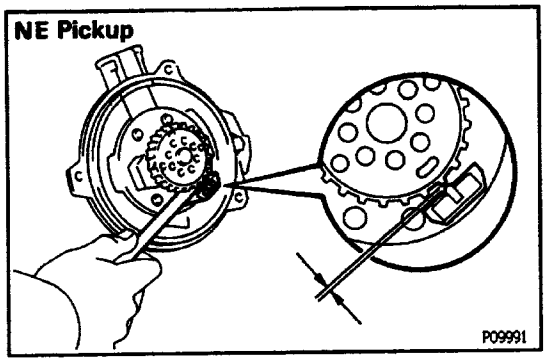

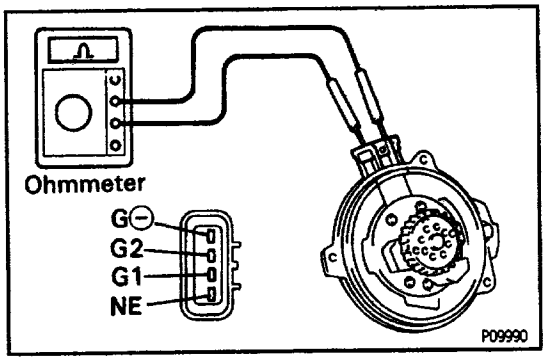

DISTRIBUTOR INSPECTION

NOTICE: 'Cold' and 'Hot' in the following sentences express the temperature of the coils themselves 'Cold" is from –10˚C (14˚F) to 50˚C (122˚F) and "Hot" is from 50˚C (22˚F) to 100˚C (212˚F).

1. **DISCONNECT DISTRIBUTOR CONNECTOR**
2. **REMOVE DISTRIBUTOR CAP WITHOUT DISCONNECTING HIGH–TENSION CORDS**
3. **REMOVE ROTOR**
4. **INSPECT AIR GAPS**

   Using SST (G 1 and G2 pickups) and a thickness gauge (NE pickup), measure the gap between the signal rotor and pickup coil projection.

   SST 09240–00020 for G1 and G2 pickups

   Air gap:

   0.2 – 0.5 mm (0.008 – 0.020 in.)

   If the gap is not as specified, replace the distributor housing assembly:
5. **INSPECT SIGNAL GENERATOR (PICKUP COIL) RESISTANCE**

   Using an ohmmeter, check resistance of the pickup coil.

Pickup coil resistance	Cold (–10 ^' 50 C)	Hot
G1 – G⊖	125 – 200 Ω	160 – 235 Ω
G2 – G⊖	125 – 200 Ω	160 – 235 Ω
NE – G⊖	155 – 250 Ω	190 – 290 Ω

   If the resistance is not as specified, replace the distributor housing assembly.
6. **REINSTALL ROTOR**
7. **REINSTALL DISTRIBUTOR CAP**
8. **RECONNECT DISTRIBUTOR CONNECTOR**

IGNITER INSPECTION

(See on–vehicle inspection)

SYSTEM CIRCUIT

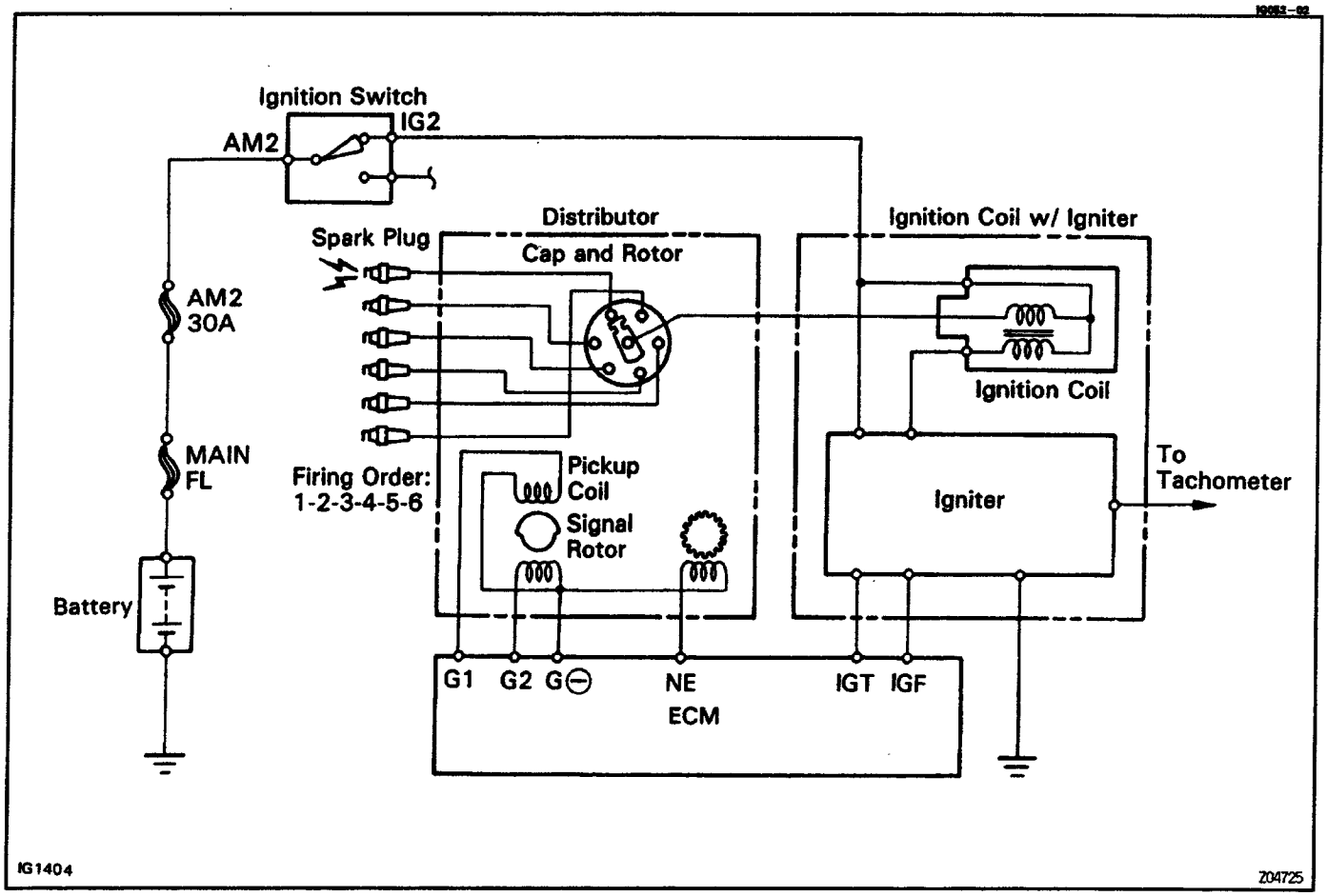

OPERATION

To maintain the most appropriate ignition timing, the ECM sends a control signal so that the igniter sends current to the ignition coil and the spark plugs produce a spark.

PRECAUTION

1. **Do not leave the ignition switch on for more than 10 minutes if the engine does not start.**

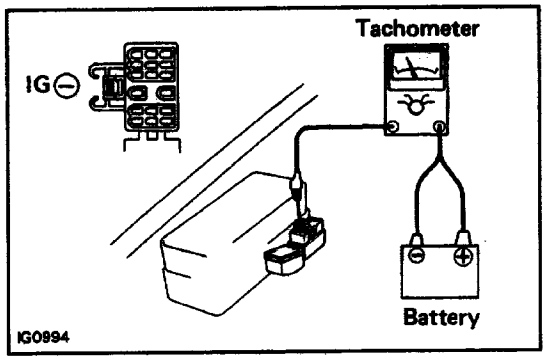

2. **With a tachometer connected to the system, connect the tachometer test probe to the IG(–) terminal of the DLC 1.**

3. **As some tachometers are not compatible with this ignition system, we recommend that you confirm the compatibility of your unit before use.**

4. **NEVER allow the tachometer terminals to touch ground as it could result in damage to the igniter and/or ignition coil.**
5. **Do not disconnect the battery while the engine is running.**

6. **Make sure that the igniter is properly grounded to the body.**

PREPARATION

SST (SPECIAL SERVICE TOOLS)

	**09240–00020** Wire Gauge Set	Air gaps of GI and G2 pickups
	**09843–18020** Diagnosis Check Wire	

RECOMMENDED TOOLS

	**09082–00050** TOYOTA Electrical Tester Set	
	**09200–00010** Engine Adjust Kit.	

EQUIPMENT

Spark plug cleaner	
Tachometer	
Timing light	Ignition timing

SERVICE SPECIFICATIONS

SERVICE DATA

Ignition timing	w/ Terminals TE1 and E1 connected	10° BTDC @ idle
Firing order	–	1 – 2 – 3 – 4 – 5 – 6
High–tension cord	Resistance Maximum	25 kΩ per cord
Spark plug	Recommended spark plug ND Recommended spark plug NGK Correct electrode gap	K16R–U BKR5EYA 0.8 mm (0.031 in.)
Ignition coil	Primary coil resistance Cold Primary coil resistance Hot Secondary coil resistance Cold Secondary coil resistance Hot	0.36 – 0.55 Ω 0.45 – 0.65 Ω 9.0 – 15.4 kΩ 11.4 – 18.1 kΩ
Distributor	Air gap Signal generator (pickup coil) resistance (Cold) G1 – G⊖ G2 – G⊖ NE – G⊖ Signal generator (pickup coil) resistance (Hot) G1 – G⊖ G2 – G⊖ NE – G⊖	0.2 – 0.5 mm (0.008 – 0.020 in.) 125 – 200 Ω 125 – 200 Ω 155 – 250 Ω 160 – 235 Ω 160 – 235 Ω 190 – 290 Ω

TORQUE SPECIFICATIONS

Part tightened	N·m	kgf·cm	ft·lbf
Spark plug x Cylinder head	18	180	13
Distributor x Cylinder head	18	185	13

SYSTEM CIRCUIT

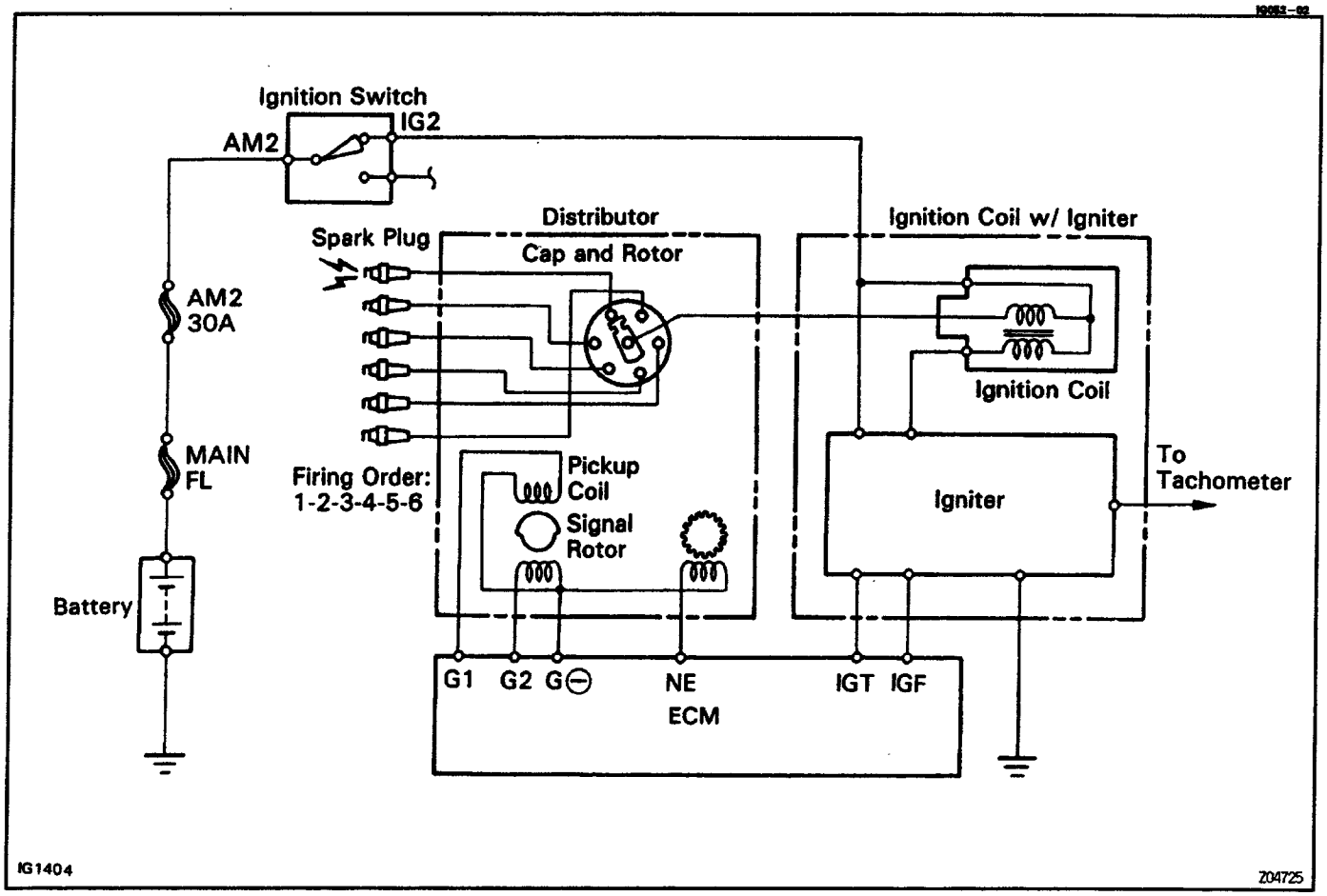

OPERATION

To maintain the most appropriate ignition timing, the ECM sends a control signal so that the igniter sends current to the ignition coil and the spark plugs produce a spark.

DISTRIBUTOR

COMPONENTS FOR REMOVAL AND INSTALLATION

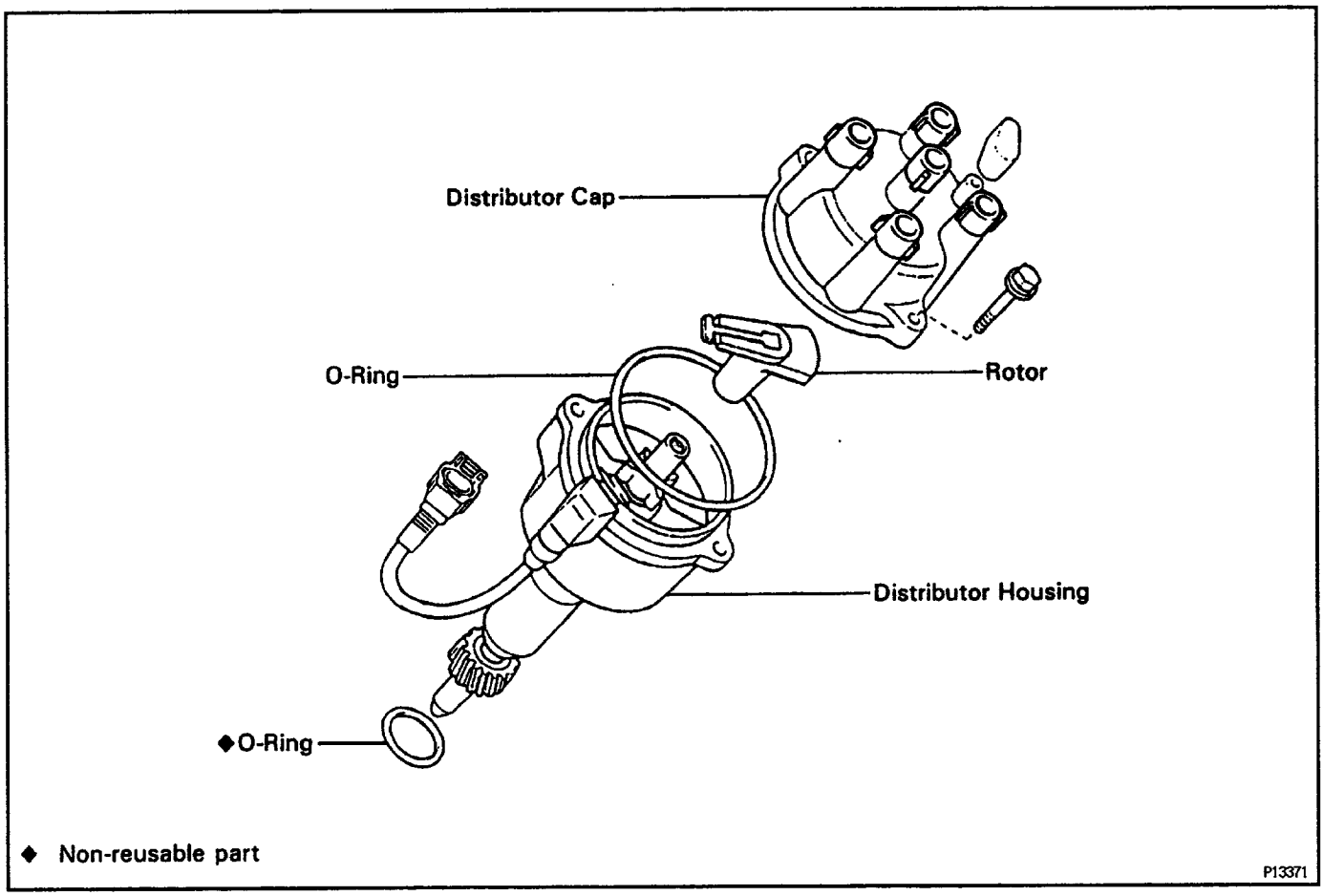

DISTRIBUTOR REMOVAL

1. **DISCONNECT HIGH–TENSION CORDS AND WIRING CONNECTOR**
2. **REMOVE SCREWS AND PULL OFF DISTRIBUTOR CAP**
3. **REMOVE HOLD–DOWN BOLT AND PULL OUT DISTRIBUTOR**

DISTRIBUTOR INSTALLATION

1. **INSTALL DISTRIBUTOR AND SET TIMING**

   (a) Install a new O–ring to the distributor.

   HINT: Always use a new O–ring when installing the distributor.

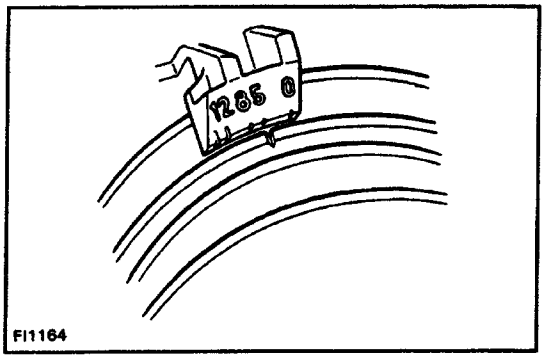

(b) Turn the crankshaft pulley until No. 1 cylinder is in compression stroke and the timing mark is aligned with 5 ° BTDC mark.
HINT: Check that the rocker arms on the No. 1 cylinder are loose. If nut, turn the crankshaft one full turn.

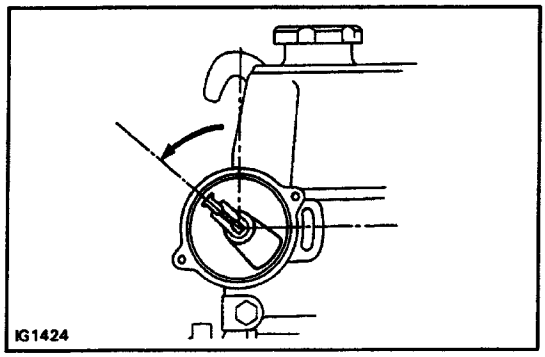

(c) Temporarily install the rotor.
(d) Begin insertion of the distributor with the rotor pointing upward and the distributor mounting hole approximately at center position of the bolt hole.
When fully installed, the rotor will rotate to the position shown.

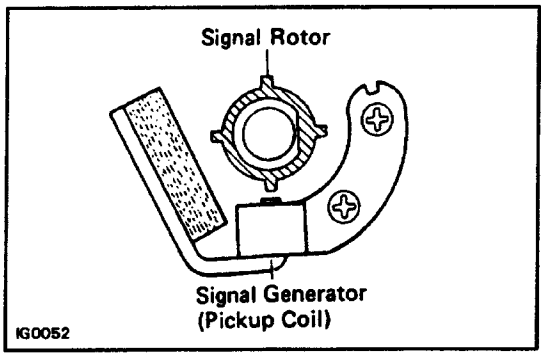

(e) Align the rotor tooth with the signal generator (pickup coil) projection.
Install and torque the distributor mounting bolt.
Torque: 19 N–m (195 kgf–cm, 14 ft–lbf)
(f) Install the rotor and distributor cap with wires.

2. CONNECT HIGH–TENSION CORDS AND WIRING CONNECTOR
3. WARM UP ENGINE TO NORMAL OPERATING TEMPERATURE
4. CONNECT TACHOMETER AND TIMING LIGHT TO ENGINE
(See page IG–2)

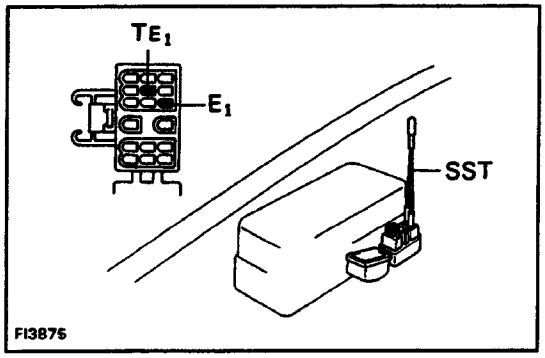

5. ADJUST IGNITION TIMING
(a) Using SST, connect terminals TE1 and E1 of the DLC 1.
SST 09843–18020
(b) Check the idle speed.
Idle speed:
750 rpm

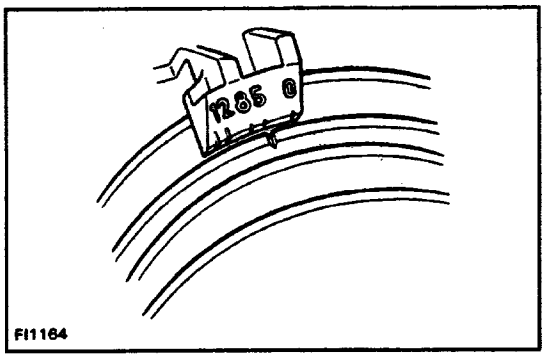

(c) Using a timing light, check the ignition timing.

Ignition timing:

5 ° BTDC @ idle

(Transmission in neutral position)

(d) Loosen the hold–down bolt, and adjust by turning the distributor.

(e) Tighten the hold–down bolt, and recheck the ignition timing.

Torque: 19 N–m (195 kgf–cm, 14 ft–lbf)

(f) Remove the SST.

SST 09843–18020

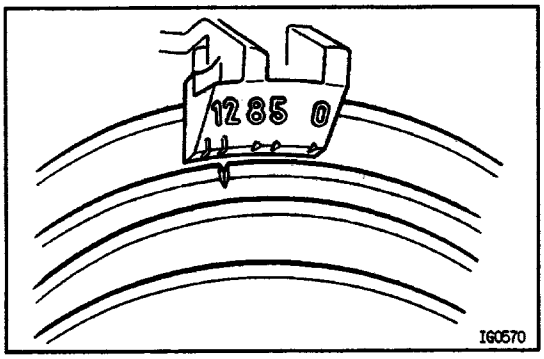

6. FURTHER CHECK IGNITION TIMING

Check that the ignition timing advances.

Ignition timing:

10 – 14 ° BTDC @ idle

7. DISCONNECT TACHOMETER AND TIMING LIGHT FROM ENGINE

ON–VEHICLE INSPECTION

SPARK TEST

CHECK THAT SPARK OCCURS

(a) Disconnect high–tension cord from the distributor.
(b) Hold the end approx. 12.5 mm (0.50 in.) from engine ground of vehicle.
(c) See if spark occurs while engine is being cranked.

HINT: To prevent gasoline from being injected from injectors during this test, crank the engine for no more than 1 – 2 seconds at a time.

If the spark does not occur, test as follows:

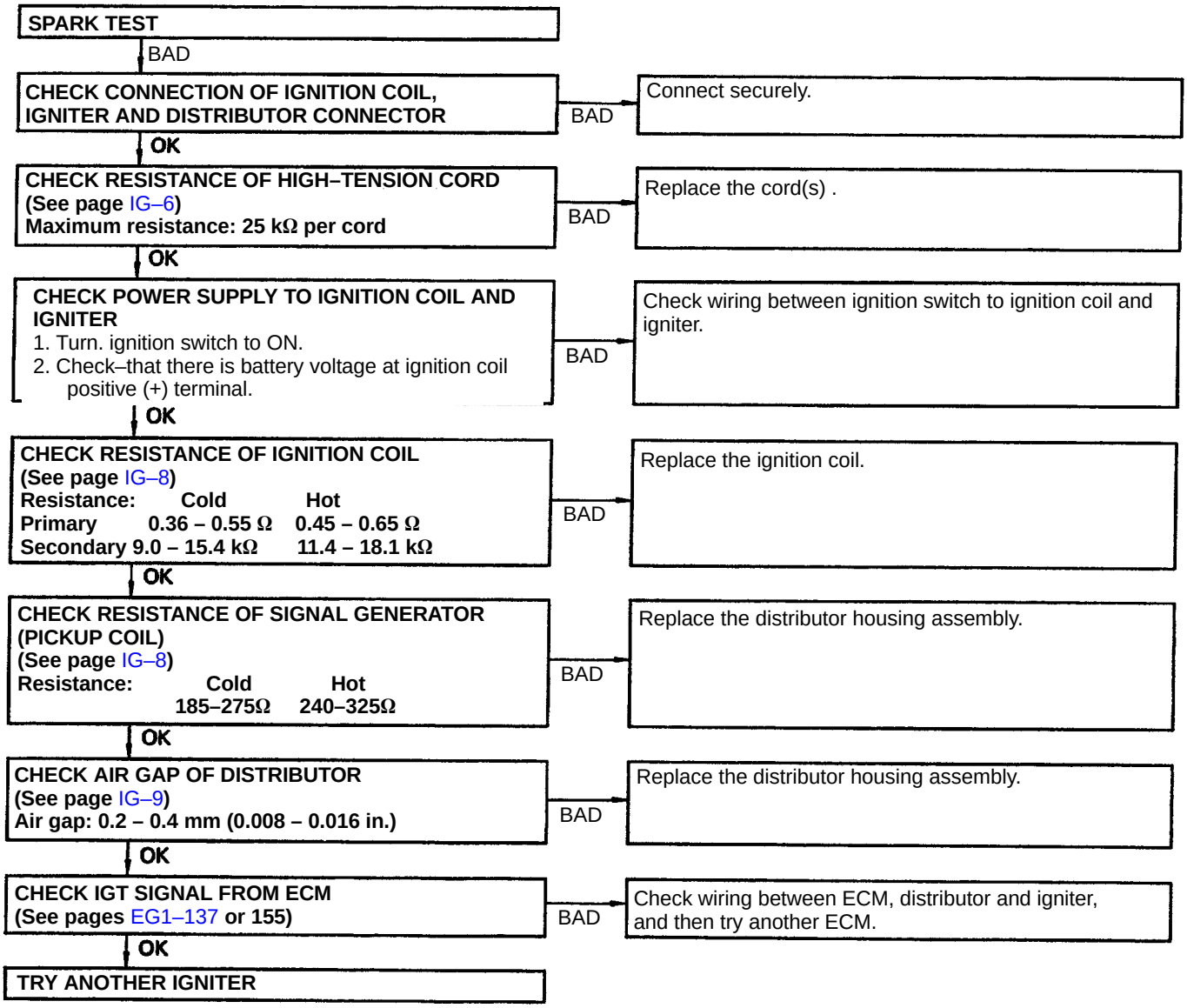

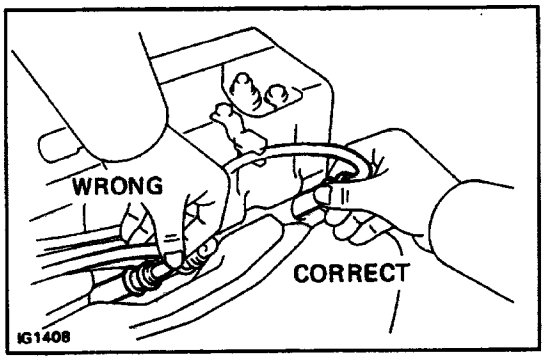

HIGH–TENSION CORDS INSPECTION

1. DISCONNECT HIGH–TENSION CORDS FROM SPARK PLUGS

Disconnect the high – tension cords at the rubber boot.

DO NOT pull on the cords.

NOTICE: Pulling on or bending the cords may damage the conductor inside.

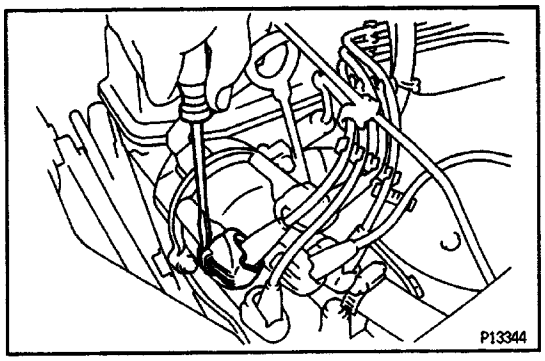

2. DISCONNECT HIGH–TENSION CORDS FROM DISTRIBUTOR CAP AND IGNITION COIL

(a) Using a screwdriver, lift up the lock claw and disconnect the holder from the distributor cap (ignition coil).

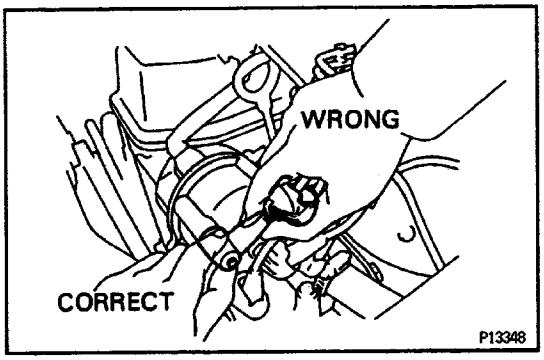

(b) Disconnect the high–tension cord at the grommet. DO NOT pull on the cord.

NOTICE:

- **Pulling on or bending the cords may damage the conductor inside.**
- **Do not wipe any of the oil from the grommet after the high–tension cord is disconnected.**

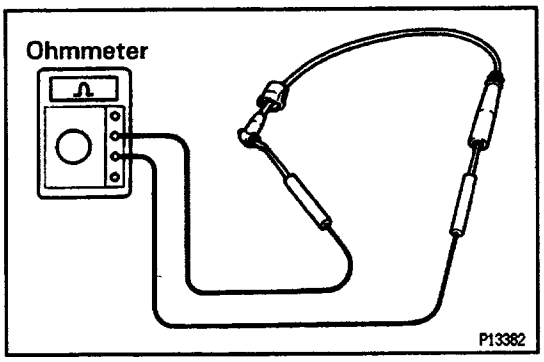

3. INSPECT HIGH–TENSION CORD RESISTANCE

Using an ohmmeter, measure the resistance.

Maximum resistance:

25 kΩ per cord

If the resistance is greater than maximum, check the terminals. If necessary, replace the high – tension cord.

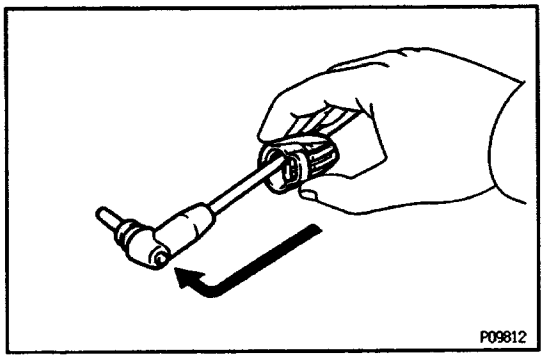

4. RECONNECT HIGH–TENSION CORDS TO DISTRIBUTOR CAP AND IGNITION COIL

(a) Assemble the holder and grommet.

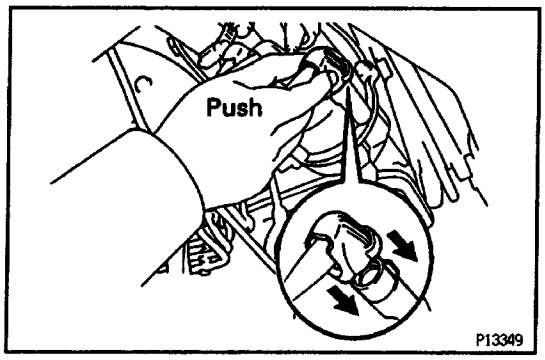

(b) Align the spline of the distributor (ignition coil) with the spline of the holder, and push in the cord.

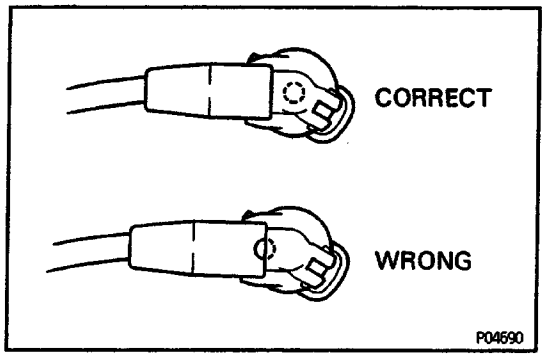

NOTICE: Check that the holder is correctly installed to the grommet and distributor cap a: shown in the illustration.

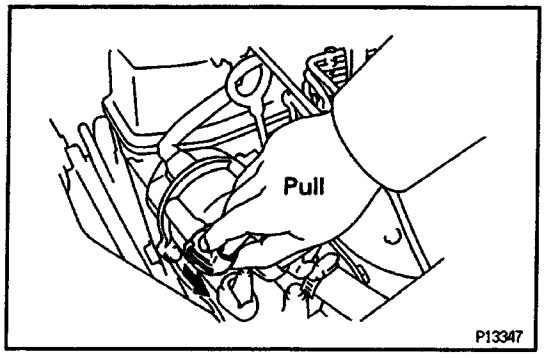

(c) Check that the lock claw of the holder is engaged by lightly pulling the holder.

5. RECONNECT HIGH–TENSION CORDS TO SPARK PLUGS

SPARK PLUGS INSPECTION

1. REMOVE SPARK PLUGS

2. CLEAN AND INSPECT SPARK PLUGS

(a) Clean the spark plugs with a spark plug cleaner or wire brush.

(b) Inspect the spark plugs for electrode wear, thread damage and insulator damage.

If a problem is found, replace the plugs.

Spark plug:

ND

W16EXR–U

NGK

BPRSEY

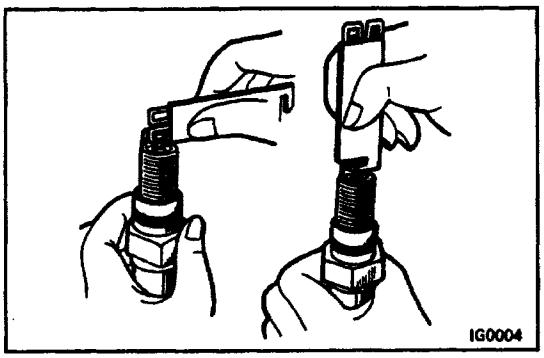

3. ADJUST ELECTRODE GAP

Carefully bend the outer electrode to obtain the correct electrode gap.

Correct electrode gap:

0.8 mm (0.031 in.)

4. INSTALL SPARK PLUGS

Torque: 18 N–m (18O kgf.crn. 13 ft–lbf)

IGNITION COIL INSPECTION

NOTICE: 'Cold' and 'Hot' in the following sentences express the temperature of the coils themselves. 'Cold' is from –10 ˚C (14 ˚F) to 50 ˚C (122 ˚F) and "Hot" is from 50 ˚C (122 ˚F) to 100 ˚C (212 ˚F).

1. DISCONNECT HIGH–TENSION CORD

2. CLEAN COIL AND CHECK FOLLOWING:

(a) Check for cracks or damage.

(b) Check the terminals for carbon tracks.

(c) Check the high–tension cord hole for carbon deposits and corrosion.

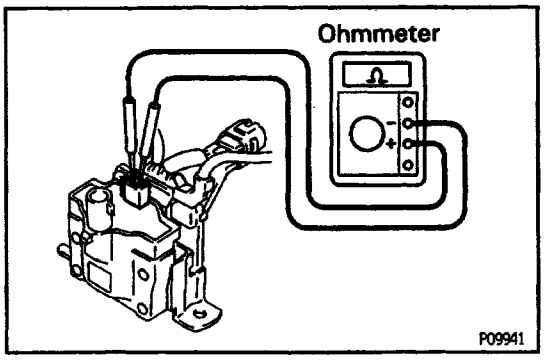

3. MEASURE PRIMARY COIL RESISTANCE

Using an ohmmeter, measure the resistance between the positive (+) and negative (–) terminals.

Primary coil resistance (Cold):

0.36–0.55Ω

Primary coil resistance (Hot) :

0.45–0.65Ω

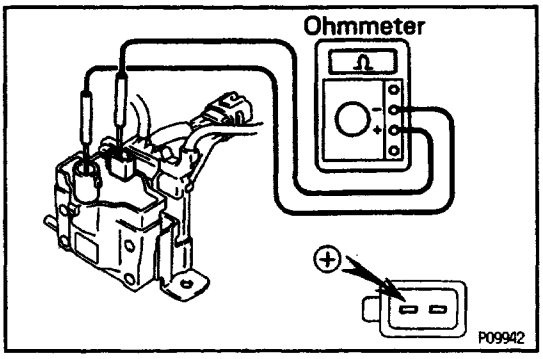

4. MEASURE SECONDARY COIL RESISTANCE

Using an ohmmeter, measure the resistance between the positive (+) terminal and high–tension terminal.

Secondary coil resistance (Cold):

9.0 – 15.4 kΩ

Secondary coil resistance (Hot) :

11.4 – 18.1 kO

5. CONNECT HIGH–TENSION CORD

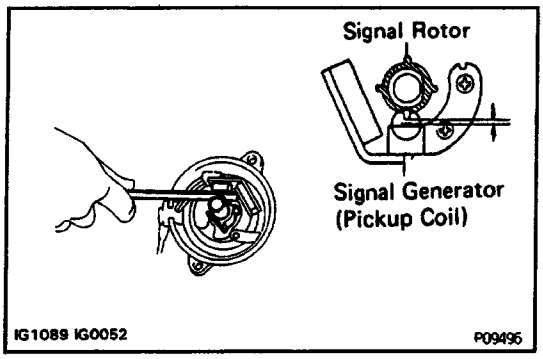

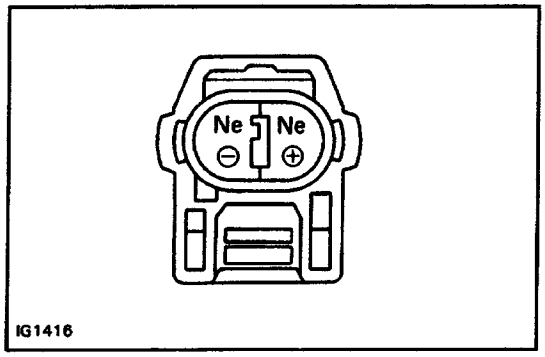

DISTRIBUTOR INSPECTION

NOTICE: "Cold" and 'Hot' in the following sentences express the temperature of the coils themselves. 'Cold' is from –10 ˚C (14 ˚F) to 50 ˚C (122 ˚F) and "Hot" is from 50 ˚C (122 ˚F) to 100 ˚C (212 ˚F).

1. INSPECT AIR GAP

Using a thickness gauge, measure the gap between the signal rotor and the signal generator (pickup coil) projection.

Air gap:

0.2–0.4mm(0.008–0.016 in.)

If the air gap is not as specified, replace the housing distributor assembly

2. CHECK SIGNAL GENERATOR (PICKUP COIL)

Using an ohmmeter, check the resistance of the signal generator (pickup coil).

Generator resistance (Cold):

185–2750

Generator resistance (Hot) :

240–3250

If the resistance is not as specified, replace the distributor housing assembly.

IGNITION SYSTEM

(22R–E)

PRECAUTION

1. **Do not allow the ignition switch to be ON for more than 10 minutes if the engine will not start.**

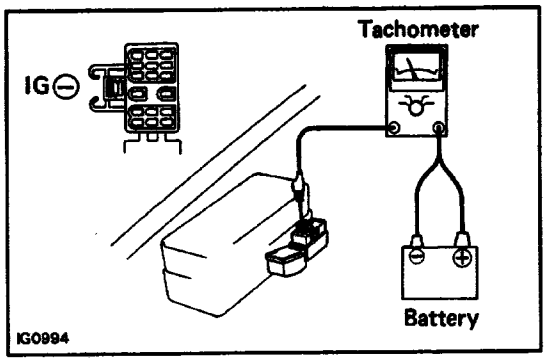

2. **When a tachometer connected to the system, connect the tachometer test probe to the IGE) terminal of the DLC1.**
3. **As some tachometers are not compatible with this ignition system, we recommend that you confirm the compatibility of your unit before use.**
4. **Never allow the ignition coil terminals to touch ground as it could result in damage to the igniter and/or ignition coil.**
5. **Do not disconnect the battery when the engine is running.**
6. **Make sure that the igniter properly grounded to the body.**

PREPARATION

SST (SPECIAL SERVICE TOOLS)

	**09843–18020** Diagnosis Check Wire	

RECOMMENDED TOOLS

	**09082–00050** TOYOTA Electrical Teeter Set.	
	**09200–00010** Engine Adjust Kit.	

EQUIPMENT

Megger insulation resistance meter	Insulation resistance meter
Spark plug cleaner	
Tachometer	
Timing light	Ignition timing

SSM (SPECIAL SERVICE MATERIALS)

	08826–00080 Seal Packing Black or equivalent (FIPG)	Ignition coil

SERVICE SPECIFICATIONS

SERVICE DATA

Spark plug	Type	ND	W16EXR–U
		NGK	BPR5EY
	Gap		0.8 mm (0.031 in.)
High–tension cord	Resistance	Maximum	25 kΩ per cord
Ignition coil	Primary coil resistance	Cold	0.36 – 0.55 Ω
	Primary coil resistance	Hot	0.45 – 0.65 Ω
	Secondary coil resistance	Cold	9.0 – 15.4 kΩ
	Secondary coil resistance	Hot	11.4 – 18.1 kΩ
Distributor	Air gap		0.2 – 0.4 mm (0.008 – 0.016 in.)
	Pickup coil resistance	Cold	185 – 275 Ω
	Pickup coil resistance	Hot	240 – 325 Ω

TORQUE SPECIFICATIONS

Part tightened	N·m	kgf·cm	ft·lbf
Spark plug x Cylinder head	18	180	13
Distributor x Cylinder head	19	195	14

SYSTEM CIRCUIT

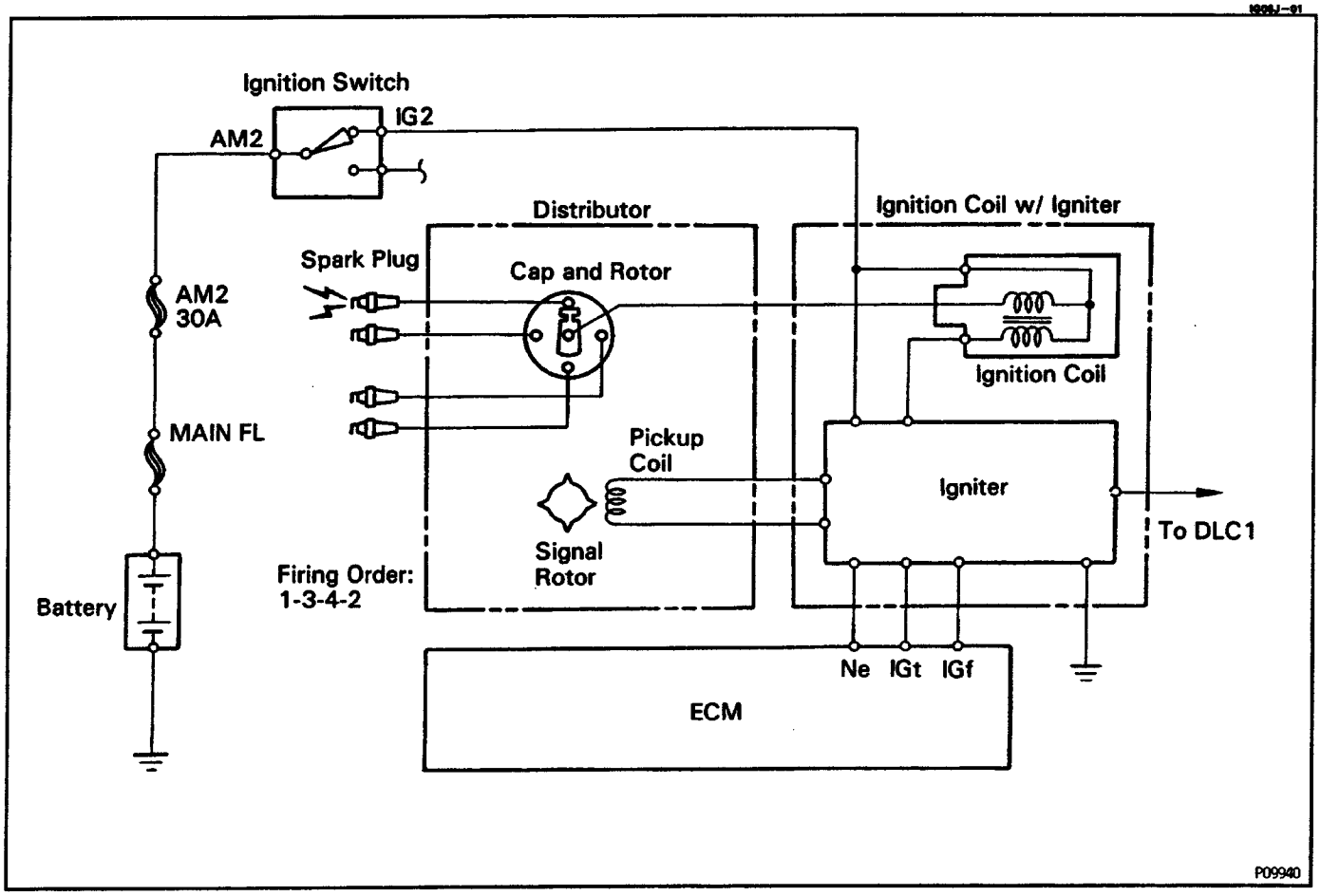

ELECTRONIC SPARK ADVANCE (ESA)

The ECM is programmed with data for optimum ignition timing under all operating conditions. Using data provided by sensors which monitor various engine functions (rpm, intake air volume, engine coolant temperature, etc.) the microcomputer (ECM) triggers the spark at precisely the right instant.

ABBREVIATIONS USED IN THIS MANUAL

ADD	Automatic Disconnecting Differential
A/T	Automatic Transmission
ATF	Automatic Transmission Fluid
BTDC	Before Top Dead Center
Calif.	California
CB	Circuit Breaker
DP	Dash Pot
ECU	Electronic Control Unit
E/G	Engine
ELR	Emergency Locking Retractor
ESA	Electronic Spark Advance
EX	Exhaust (Manifold, Valve)
FIPG	Formed in Place Gasket
FL	Fusible Link
FPU	Fuel Pressure Up
Fr	Front
IG	Ignition
IN	Intake (Manifold, Valve)
J/6	Junction Block
LH	Left – Hand
LSP & BV	Load Sensing Proportioning and By–Pass Valve
Max.	Maximum
Min.	Minimum
MP	Multipurpose
M/T	Manual Transmission
O/D, o o	Overdrive
OHC	Over Head Camshaft
o/s	Oversize
PCV	Positive Crankcase Ventilation
PS	Power Steering
RH	Right–Hand
Rr	Rear
SSM	Special Service Materials
SST	Special Service Tools
STD	Standard
SW	Switch

TDC	Top Dead Center
TEMP.	Temperature
T/M	Transmission
U/S	Undersize
VCV	Vacuum Control Valve
VSV	Vacuum Switching Valve
VTV	Vacuum Transmitting Valve
w/	With
W/O	Without
2WD	Two Wheel Drive Vehicles (4 x 2)
4WD	Four Wheel Drive Vehicles (4 x 4)

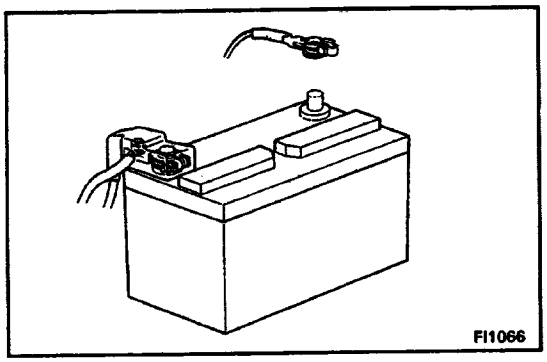

GENERAL REPAIR INSTRUCTIONS

1. Use fender, seat and floor covers to keep the vehicle clean and prevent damage.
2. During disassembly, keep parts in the appropriate order to facilitate reassembly.
3. Observe the following:
   (a) Before performing electrical work, disconnect the negative (–) terminal cable from the battery.
   (b) If it is necessary to disconnect the battery for inspection or repair, always disconnect the negative (–) terminal cable which is grounded to the vehicle body.
   (c) To prevent damage to the battery terminal, loosen the cable nut and raise the cable straight up without twisting or prying it.
   (d) Clean the battery terminals and cable ends with a clean shop rag. Do not scrape them with a file or other abrasive objects.
   (e) Install the cable ends to the battery terminals with the nut loose, and tighten the nut after installation. Do not use a hammer to tap the cable ends onto the terminals.
   (f) Be sure the cover for the positive (+) terminal is properly in place.
4. Check hose and wiring connectors to make sure that they are secure and correct.
5. Non–reusable parts
   (a) Always replace cotter pins, gaskets, 0– rings and oil seals etc. with new ones.
   (b) Non–reusable parts are indicated in the component illustrations by the "♦" symbol.

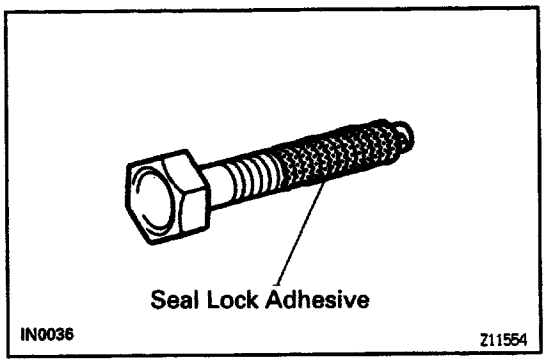

6. Precoated parts
   Precoated parts are bolts and nuts, etc. that are coated with a seal lock adhesive at the factory.
   (a) If a precoated part is retightened, loosened o caused to move in any way, it must be recoated with the specified adhesive.

(b) When reusing precoated parts, clean oft the old adhesive and dry with compressed air. Then apply the specified seal lock adhesive to the bolt, nut or threads.

(c) Precoated parts are indicated in the component illustrations by the "★" symbol.

7. When necessary, use a sealer on gaskets to prevent leaks.
8. Carefully observe all specifications for bolt tightening torques. Always use a torque wrench.
9. Use of special service tools (SST) and special service materials (SSM) may be required, depending on the nature of the repair. Be sure to use SST and SSM where specified and follow the proper work procedure. A list of SST and SSM can be found in the preparation part at the front of each section in this manual.

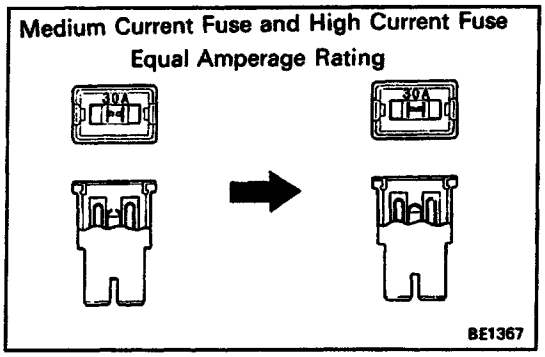

10. When replacing fuses, be sure the new fuse has the correct amperage rating. DO NOT exceed the rating or use one with a lower rating.

Illustration	Symbol	Part Name	Abbreviation
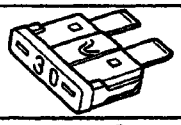 BE5594	 IN0365	FUSE	**FUSE**
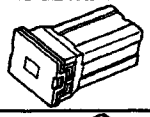 BE5595	 IN0366	MEDIUM CURRENT FUSE	M–FUSE
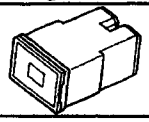 BE5596	 IN0367	HIGH CURRENT FUSE	H–FUSE
 BE5597	 IN0367	FUSIBLE LINK	**FL**
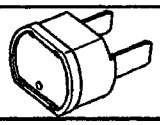 BE5598	 IN0368	CIRCUIT BREAKER	**CB**

11. Care must be taken when jacking up and supporting the vehicle. Be sure to lift and support the vehicle at the proper locations (See page IN–12).
    (a) If the vehicle is to be jacked up only at the front or rear end, be sure to block the wheels at the opposite end in order to ensure safety.
    (b) After the vehicle is jacked up, be sure to support it on stands. It is extremely dangerous to do any work on a vehicle raised on a jack alone, even for a small job that can be finished quickly.
12. Observe the following precautions to avoid damage to the following parts:
    (a) Do not open the cover or case of the ECU, ECM, PCM or TCM unless absolutely necessary. (If the IC terminals are touched, the IC may be destr–oyed by static electricity.)

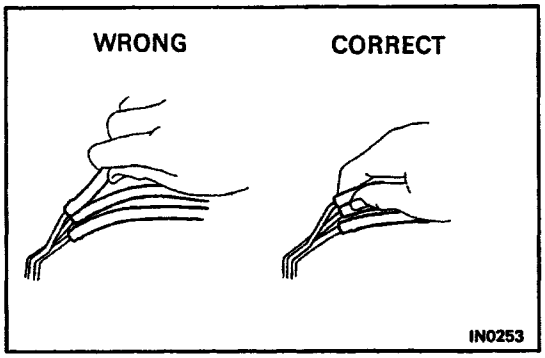

    (b) To disconnect vacuum hoses, pull on the end, not the middle of the hose.
    (c) To pull apart electrical connectors, pull on the connector itself, not the wires.
    (d) Be careful not to drop electrical components, such as sensors or relays. If they are dropped on a hard floor, they should be replaced and not re-used.
    (e) When steam cleaning an engine, protect the distributor, air filter, and VCV from water.
    (f) Never use an impact wrench to remove or install temperature switches or temperature sensors.
    (g) When checking continuity at the wire connector, insert the tester probe carefully to prevent terminals from bending.
    (h) When using a vacuum gauge, never force the hose onto a connector that is too large. Use a step–down adapter instead. Once the hose has been stretched, it may leak.

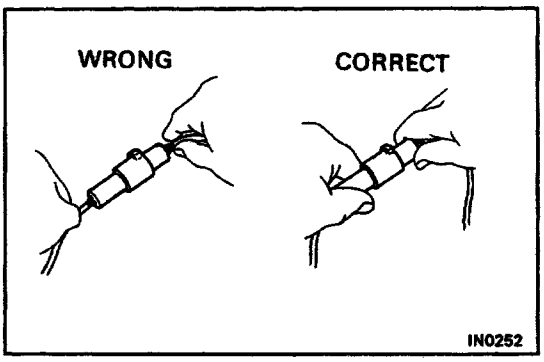

13. Tag hoses before disconnecting them:
    (a) When disconnecting vacuum hoses, use tags to identify how they should be reconnected.
    (b) After completing a job, double check that the vacuum hoses are properly connected. A label under the hood shows the proper layout.

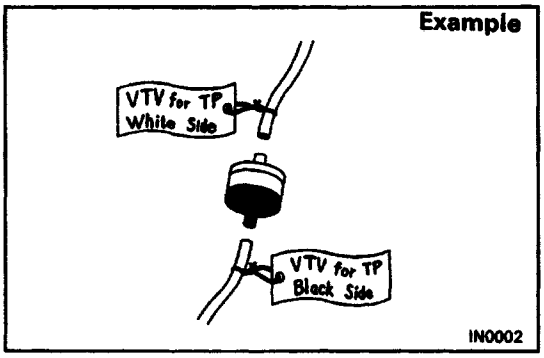

14. Unless otherwise stated, all resistance is measured at an ambient temperature of 20˚C (68˚ F). Because the resistance may be outside specifications if measured at high temperatures immediately after the vehicle has been running, measurements should be made when the engine has cooled down.

GLOSSARY OF SAE AND TOYOTA TERMS

This glossary lists all SAE–J1930 terms and abbreviations used in this manual in compliance with SAE recommendations, as well as their Toyota equivalents.

SAE ABBREVI–ATIONS	SAE TERMS	TOYOTA TERMS ( ) — ABBREVIATIONS
A/C	Air Conditioning	Air Conditioner
ACL	Air Cleaner	Air Cleaner
AIR	Secondary Air Injection	Air injection (AI)
AP	Accelerator Pedal	–
B+	Battery Positive Voltage	+ B, Battery Voltage
BARO	Barometric Pressure	–
CAC	Charge Air Cooler	Intercooler
CARB	Carburetor	Carburetor
CFI	Continuous Fuel Injection	–
CKP	Crankshaft Position	Crank Angle
CL	Closed Loop	Closed Loop
CMP	Camshaft Position	Cam Angle
CPP	Clutch Pedal Position	–
CTOX	Continuous Trap Oxidizer	–
CTP	Closed Throttle Position	Idle ON (1DL ON)
D FI	Direct Fuel Injection (Diesel)	Direct Injection (D1)
DI	Distributor Ignition	–
DLCi DLC2 DLC3	Data Link Connector 1 Data Link Connector 2 Data Link Connector 3	1: Check Connector 2: Toyota Diagnosis Communication Link (TDCI.) 3: OBD II Diagnostic Connector
DTC	Diagnostic Trouble Code	Diagnostic Code
DTM	Diagnostic Test Mode	–
ECL	Engine Control Level	–
ECM	Engine Control Module	Engine ECU (Electronic Control Unit)
ect	Engine Coolant Temperature	Coolant Temperature, Water Temperature (THW)
EEPROM	Electrically Erasable Programmable Read Only Memory	Electrically Erasable Programmable Read Only Memory (EEPROM), Erasable Programmable Read Only Memory (EPROM)
EFE	Early Fuel Evaporation	Cold Mixture Heater (CMH), Heat Control Valve (HCV)
EG R	Exhaust Gas Recirculation	Exhaust Gas Recirculation (EGR)
EI	Electronic Ignition	Toyota Distributorless Ignition (TDi)
EM	Engine Modification	Engine Modification (EM)
EPROM	Erasable Programmable Read Only Memory	Programmable Read Only Memory (PROM)
EVAP	Evaporative Emission	Evaporative Emission Control (EVAP)
FC	Fan Control	–
FEEPROM	Flash Electrically Erasable Programmable Read Only Memory	–
FEP ROM	Flash Erasable Programmable Read Only Memory	–
FF	Flexible Fuel	–
FP	Fuel Pump	Fuel Pump
G EN	Generator	Alternator
GND	Ground	Ground (GND)
N02S	Heated Oxygen Sensor	Heated Oxygen Sensor (H02S)

IAC	Idle Air Control	Idle Speed Control QSC)
IAT	Intake Air Temperature	Intake or Inlet Air Temperature
ICM	Ignition Control Module	–
IFI	Indirect Fuel Injection	Indirect Injection
IFS	Inertia Fuel–Shutoff	–
ISC	Idle Speed Control	–
KS	Knock Sensor	Knock Sensor
MAF	Mass Air Flow	Air Flow Meter
MAP	Manifold Absolute Pressure	Manifold Pressure Intake Vacuum
MC	Mixture Control	Electric Bleed Air Control Valve (EBC1) Mixture Control Valve (MCV) Electric Air Control Valve (EACV)
MDP	Manifold Differential Pressure	–
M FI	Multiport Fuel Injection	Electronic Fuel Injection (EFI)
MIL	Malfunction Indicator Lamp	Check Engine Light
MST	Manifold Surface Temperature	–
MVZ	Manifold Vacuum Zone	–
NVRAM	Non–Volatile Random Access Memory	–
o2s	Oxygen Sensor	Oxygen Sensor, Ot Sensor lOtSy
oBo	On –Board Diagnostic	On–Board Diagnostic (08D)
OC	Oxidation Catalytic Converter	Oxidation Catalyst Converter (OC), CCo
OP	Open Loop	Open Loop
PAIR	Pulsed Secondary Air Injection	Air Suction (AS)
PCM	Powertrain Control Module	–
PNP	Park/Neutral Position	–
PROM	Programmable Read Only Memory	–
PSP	Power Steering Pressure	–
Ptox	Periodic Trap Oxidizer	Diesel Particulate Filter (DPF) Diesel Particulate Trap (DPT)
RAM	Random Access Memory	Random Access Memory (RAM)
RM	Relay Module	–
ROM	Read Only Memory	Read Only Memory (ROM)
RPM	Engine Speed	Engine Speed
SC	Supercharger	Supercharger
SCB	Supercharger Bypass	–
SFI	Sequential Multiport Fuel Injection	Electronic Fuel Injection (EFI), Sequential Injection
SPL	Smoke Puff Limiter	–
SRI	Service Reminder Indicator	–
SRT	System Readiness Test	–
ST	Scan Tool	–
TB	Throttle Body	Throttle Body
TBI	Throttle Body Fuel injection	Single Point Injection Central Fuel Injection (Ci)
TC	Turbocharger	Turbocharger
tce	Torque Converter Clutch	Torque Converter
TCM	Transmission Control Module	Transmission ECU (Electronic Control Unity
TP	Throttle Position	Throttle Position
TR	Transmission Range	–

tvv	Thermal Vacuum Valve	Bimetallic Vacuum Switching Valve (BVSV) Thermostatic Vacuum Switching Valve (TVSV)
TWC	Three–Way Catalytic Converter	Three–Way Catalytic (TWC) CCRo
TWC+OC	Three–Way + Oxidation Catalytic Converter	CC,, + CCo
VAF	Volume Air Flow	Air Flow Motor
VR	Voltage Regulator	Voltage Regulator
VSS	Vehicle Speed Sensor	Vehicle Speed Sensor (Read Switch Type)
wot	Wide Open Throttle	Full Throttle
WU–OC	Warm Up Oxidation Catalytic Converter	–
WU–TWC	Warm Up Three–Way Catalytic Converter	Manifold Converter
3GR	Third Gear	–
4G R	Fourth Gear	–

INTRODUCTION

If you paid for the content in this manual – you were screwed!
Download this and more for free using BitTorrent!

HOW TO USE THIS MANUAL

INDEX

An INDEX is provided on the first page of each section to guide you to the item to be repaired.
To assist you in finding your way through the manual, the Section Title and major heading are given at the top of every page.

GENERAL DESCRIPTION

At the beginning of each section, a general Description is given that pertains to all repair operations contained in that section.
Read these precautions before starting any repair task.

TROUBLESHOOTING

TROUBLESHOOTING tables are included for each system to help you diagnose the problem and find the cause.

PREPARATION

Preparation lists the SST (Special Service Tools), recommended tools, equipment, lubricant and SSM (Special Service Materials) which should be prepared before beginning the operation and explains the purpose of each one.

REPAIR PROCEDURES

Most repair operations begin with an overview illustration. It identifies the components and shows how the parts fit together.
Example:

If you paid for the content in this manual – you were screwed!
Download this and more for free using BitTorrent!

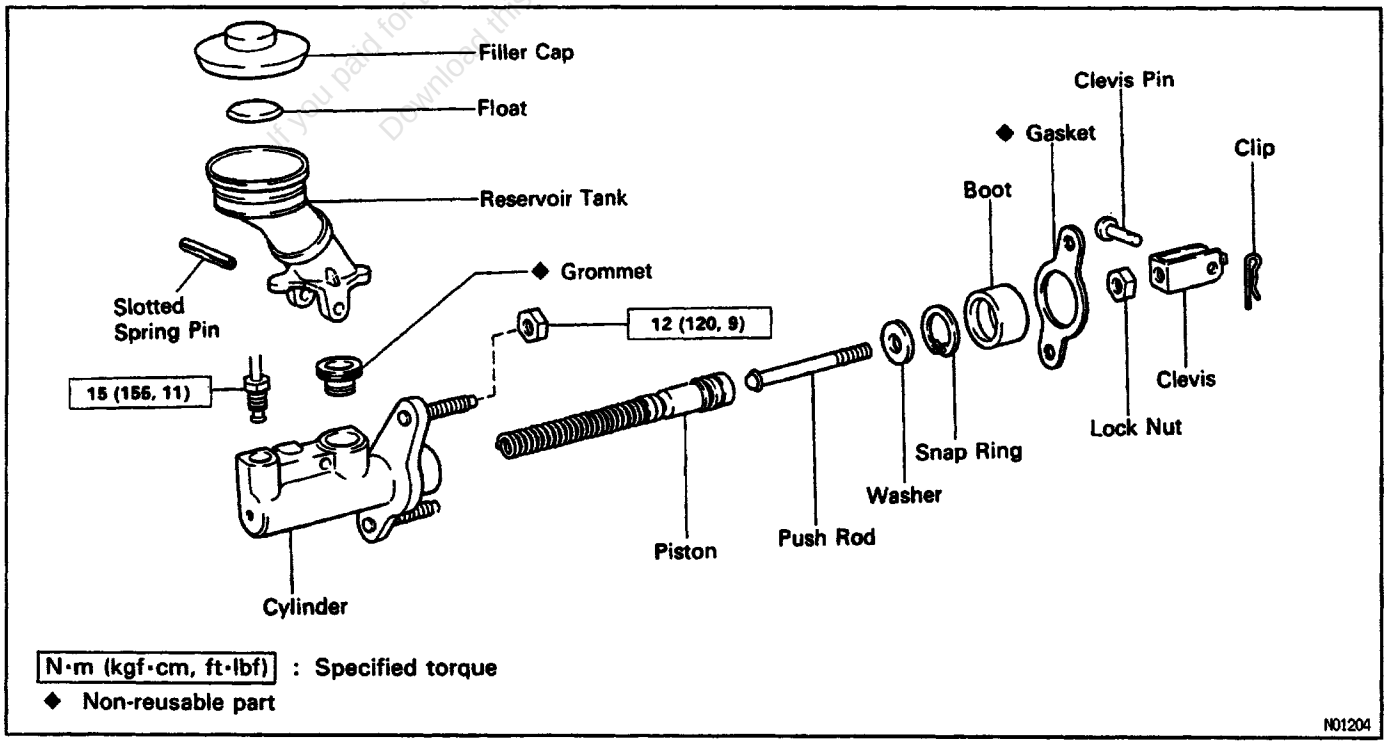

The procedures are presented in a step–by–step format:

- The illustration shows what to do and where to do it.
- The task heading tells what to do.
- The detailed text tells how to perform the task and gives other information such as specifications and warnings.
  Example:

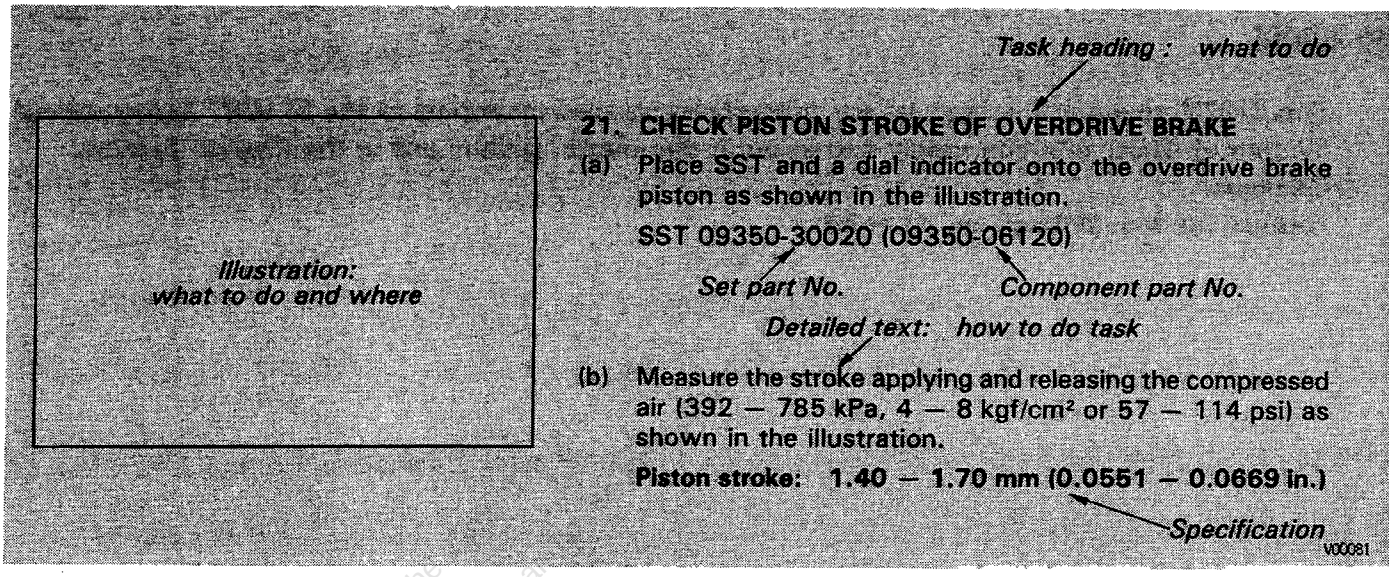

This format provides the experienced technician with a FAST TRACK to the information needed. The upper case task heading can be read at a glance when necessary, and the text below it provides detailed information. Important specifications and warnings always stand out in bold type.

If you need for the
Downloaded from

REFERENCES

References have been kept to a minimum. However, when they are required you are given the page to refer to.

SPECIFICATIONS

Specifications are presented in bold type throughout the text where needed. You never have to leave the procedure to look up your specifications. They are also found at the end of each section, for quick reference.

CAUTIONS, NOTICES, HINTS:

- CAUTIONS are presented in bold type, and indicate there is a possibility of injury to you or other people.
- NOTICES are also presented in bold type, and indicate the possibility of damage to the components being repaired.
- HINTS are separated from the text but do not appear in bold. They provide additional information to help you perform the repair efficiently.

SI UNIT

The UNITS given in this manual are primarily expressed according to the SI UNIT (International System of Unit), and alternately expressed in the metric system and in the English System.
Example:

Torque: 30 N–m (310kgf –cm, 22 ft–lbf)

If you paid for the content in this manual – you were screwed!
Download this and more for free using BitTorrent!

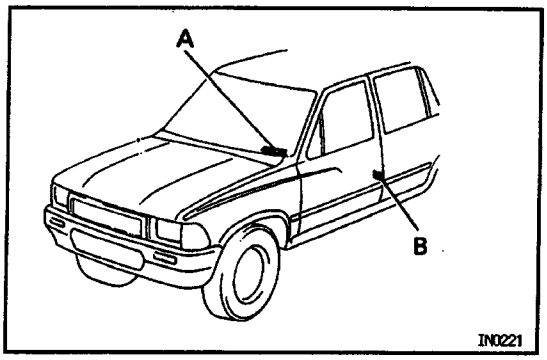

IDENTIFICATION INFORMATION

VEHICLE IDENTIFICATION NUMBER

The vehicle identification number is stamped on the vehicle identification number plate and certification label.

A. Vehicle Identification Number Plate

B. Certification Label

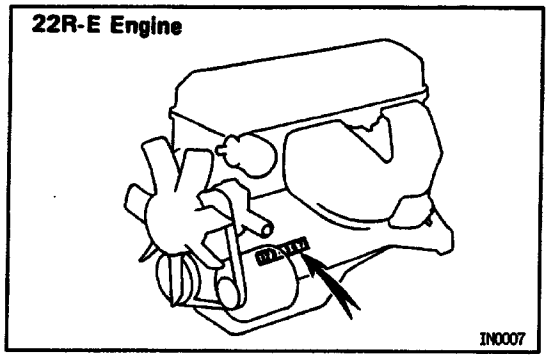

ENGINE SERIAL NUMBER

The engine serial number is stamped on the engine block as shown.

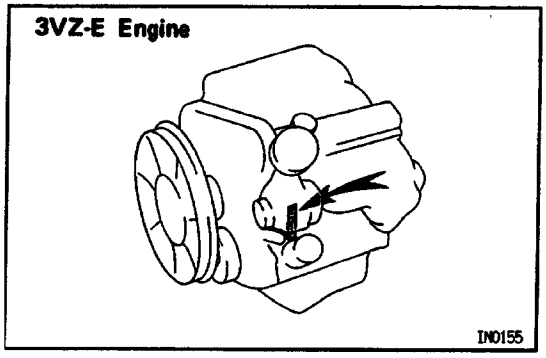

PRECAUTION

FOR VEHICLES EQUIPPED WITH A CATALYTIC CONVERTER

CAUTION: If large amounts of unburned gasoline flow into the converter, it may overheat and create a fire hazard. To prevent this. observe the following precautions and explain them to your customer.

1. Use only unleaded gasoline.
2. Avoid prolonged idling.
   Avoid running the engine at idle speed for more than 20 minutes.
3. Avoid spark jump test.
   (a) Perform spark jump test only when absolutely necessary. Perform this test as rapidly as possible.
   (b) While testing, never race the engine.
4. Avoid prolonged engine compression measurement.
   Engine compression tests Must be done as rapidly as possible.
5. Do not run engine when fuel tank is nearly empty.
   This may cause the engine to misfire and create an extra load on the converter.
6. Avoid coasting with ignition turned off and prolonged braking.
7. Do not dispose of used catalyst along with parts contaminated with gasoline or oil.

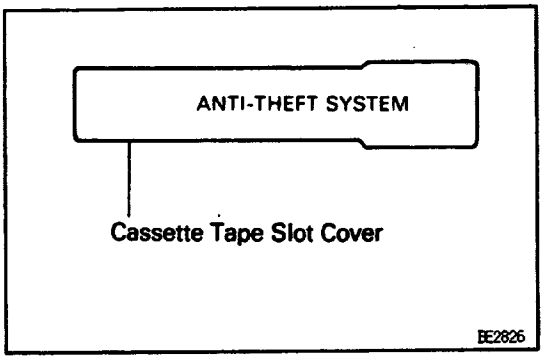

o^oe–e,

FOR VEHICLES WITH AN AUDIO SYSTEM WITH BUILT–IN ANTI–THEFT SYSTEM

Audio System displaying the sign ’ANTI –THEFT SYSTEM” shown on the left has a built–in anti–theft system which makes the audio system soundless if stolen.

If the power source for the audio system is cut even once, the anti–theft system operates so that even if the power source is reconnected, the audio system will not produce any sound unless the ID number selected by the customer is input again. Accordingly, when performing repairs on vehicles equipped with this system, before disconnecting the battery terminals or removing the audio system the customer

should be asked for the ID number so that the technician can input the ID number afterwards, or else a

request made to the customer to input the ID number,

For the method to input the ID number or cancel the anti–theft system, refer to the Owner’s Manual.

IF VEHICLE IS EQUIPPED WITH MOBILE COMMUNICATION SYSTEM

For vehicles with mobile communication systems such as two–way radios and cellular telephones, ob–serve the following precautions.

(1) Install the antenna as far as possible away from the ECM, ECU and sensors of the vehicle's electronic sy stem.

(2) Install the antenna feeder at least 20 cm (7.87 in.) away from the ECM, ECU and sensors of the vehicle's electronics systems. For details about ECM, ECU and sensors locations, refer to the section on the applicable component.

(3) Do not wind the antenna feeder together with the other wiring. As much as possible, also avoid running the anten na feeder parallel with other wire harnesses.

(4) Confirm that the antenna and feeder are correctly adjusted.

(5) Do not install powerful mobile communications system.

STANDARD BOLT TORQUE SPECIFICATIONS

HOW TO DETERMINE BOLT STRENGTH

<table>
<tr><th></th><th>Mark</th><th>Class</th><th></th><th>Mark</th><th>Class</th></tr>
<tr><td rowspan="2">Hexagon head bolt</td><td>

4 – 4T
5 – 5T
6 – 6T
7 – 7T
8 – 8T
9 – 9T
10 – 10T
11 – 11T</td><td>4T</td><td rowspan="4">Stud bolt</td><td rowspan="2">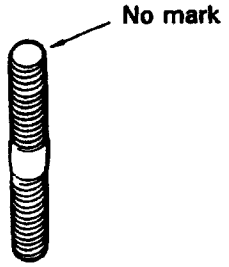
</td><td rowspan="2">4T</td></tr>
<tr><td> No mark</td><td>4T</td></tr>
<tr><td>Hexagon flange bolt wl washer hexagon bolt</td><td> No mark</td><td>4T</td><td rowspan="2">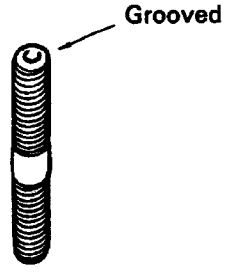
</td><td rowspan="2">6T</td></tr>
<tr><td>Hexagon head bolt</td><td> 2 protruding lines</td><td>5T</td></tr>
<tr><td>Hexagon flange bolt wl washer hexagon bolt</td><td> 2 protruding lines</td><td>6T</td><td>Welded bolt</td><td>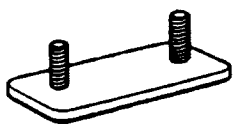</td><td>4T</td></tr>
<tr><td>Hexagon head bolt</td><td> 3 protruding lines</td><td>7T</td><td colspan="3"></td></tr>
<tr><td>Hexagon head bolt</td><td> 4 protruding lines</td><td>8T</td><td colspan="3"></td></tr>
</table>

SPECIFIED TORQUE FOR STANDARD BOLTS

Class	Diameter mm	Pitch mm	Specified torque					
			Hexagon head bolt			Hexagon flange bolt		
			N·m	kgf·cm	ft·lbf	N·m	kgf·cm	ft·lbf
4T	6	1	5	55	48 in.·lbf	6	60	52 in.·lbf
	8	1.25	12.5	130	9	14	145	10
	10	1.25	26	260	19	29	290	21
	12	1.25	47	480	35	53	540	39
	14	1.5	74	760	55	84	850	61
	16	1.5	115	1,150	83	—	—	—
5T	6	1	6.5	65	56 in.·lbf	7.5	75	65 in.·lbf
	8	1.25	15.5	160	12	17.5	175	13
	10	1.25	32	330	24	36	360	26
	12	1.25	59	600	43	65	670	48
	14	1.5	91	930	67	100	1,050	76
	16	1.5	140	1,400	101	—	—	—
6T	6	1	8	80	69 in.·lbf	9	90	78 in.·lbf
	8	1.25	19	195	14	21	210	15
	10	1.25	39	400	29	44	440	32
	12	1.25	71	730	53	80	810	59
	14	1.5	110	1,100	80	125	1,250	90
	16	1.5	170	1,750	127	—	—	—
7T	6	1	10.5	110	8	12	120	9
	8	1.25	25	260	19	28	290	21
	10	1.25	52	530	38	58	590	43
	12	1.25	95	970	70	105	1,050	76
	14	1.5	145	1,500	108	165	1,700	123
	16	1.5	230	2,300	166	—	—	—
8T	8	1.25	29	300	22	33	330	24
	10	1.25	61	620	45	68	690	50
	12	1.25	110	1,100	80	120	1,250	90
9T	8	1.25	34	340	25	37	380	27
	10	1.25	70	710	51	78	790	57
	12	1.25	125	1,300	94	140	1,450	105
10T	8	1.25	38	390	28	42	430	31
	10	1.25	78	800	58	88	890	64
	12	1.25	140	1,450	105	155	1,600	116
11T	8	1.25	42	430	31	47	480	35
	10	1.25	87	890	64	97	990	72
	12	1.25	155	1,600	116	175	1,800	130

VEHICLE LIFT AND SUPPORT LOCATIONS

IN007–01

[2WD]

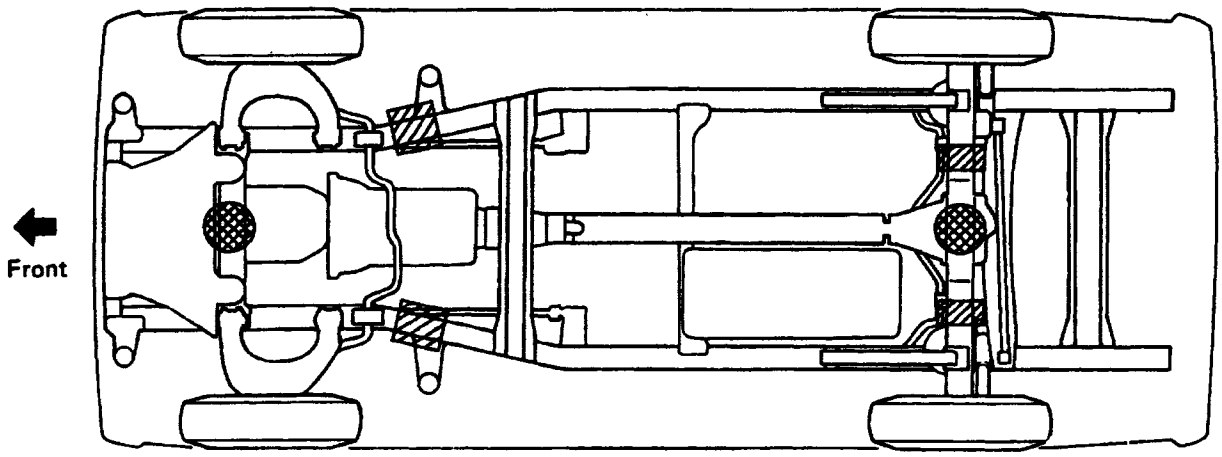

[4WD]

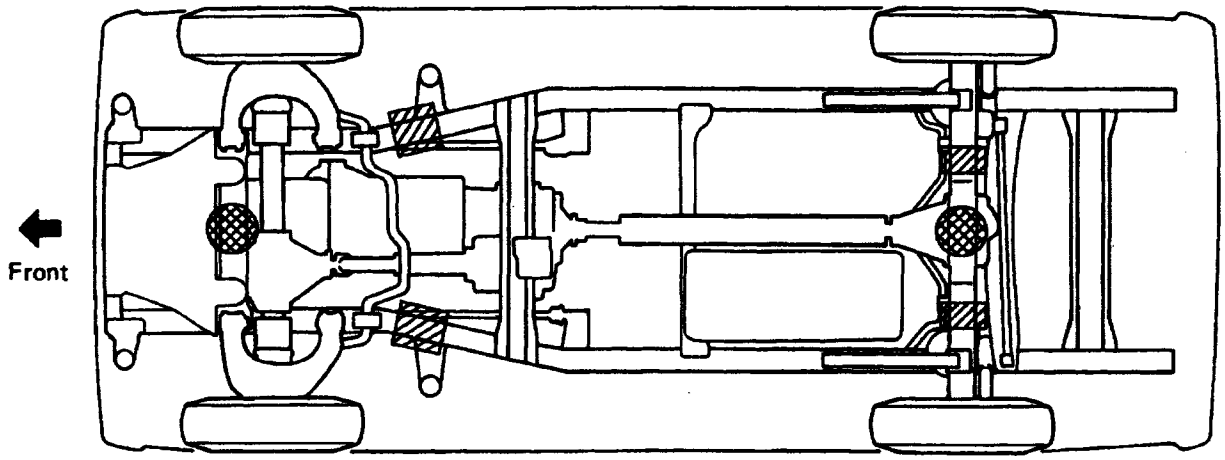

JACK POSITION .....

Front ..... Center of crossmember
Rear ..... Center of rear axle housing

SUPPORT POSITION

Safety stand .....

IN0222
IN0223

Z05147

GENERAL MAINTENANCE

These are maintenance and inspection items which are considered to be the owner's responsibility. They can be done by the owner or they can have them done at a service shop. These items include those which should be checked on a daily basis, those which, in most cases, do not require (special) tools and those which are considered to be reasonable for the owner to do.

Items and procedures for general maintenance are as follows.

OUTSIDE VEHICLE

1. TIRES

(a) Check the pressure with a gauge. If necessary, adjust.

(b) Check for cuts, damage or excessive wear.

2. WHEEL NUTS

When checking the tires, check the nuts for looseness or for missing nuts. If neces–sary, tighten them.

3. TIRE ROTATION

It is recommended that the tires be rotated every 7,500 miles (12,000 km).

4. WINDSHIELD WIPER BLADES

Check for wear or cracks whenever they do not wipe clean. If necessary, replace.

5. FLUID LEAKS

(a) Check underneath for leaking fuel, oil, water or other fluid.

(b) If you smell gasoline fumes or notice any leak, have the cause found and corrected.

6. DOORS AND ENGINE HOOD

(a) Check that all doors and the tailgate operate smoothly, and that all latches lock securely.

(b) Check that the engine hood secondary latch secures the hood from opening when the primary latch is released.

INSIDE VEHICLE

7. LIGHTS

(a) Check that the headlights, stop lights, tail-lights, turn signal lights, and other lights are all working.

(b) Check the headlight aim.

8. WARNING LIGHTS AND BUZZERS

Check that all warning lights and buzzers function properly.

9. HORN

Check that it is working.

10. WINDSHIELD GLASS

Check for scratches, pits or abrasions.

11. WINDSHIELD WIPER AND WASHER

(a) Check operation of the wipers and washer.

(b) Check that the wipers do not streak.

12. WINDSHIELD DEFROSTER

Check that air comes out from the defroster outlet when operating the heater or air conditioner.

13. REAR VIEW MIRROR

Check that it is mounted securely.

14. SUN VISORS

Check that they move freely and are mounted securely.

15. STEERING WHEEL

Check that it has the specified freeplay. Be alert for changes in steering condition, such as hard steering, excessive freeplay or strange noises.

16. SEATS

(a) Check that the seat adjusters operate smoothly.

(b) Check that all latches lock securely in any position.

(c) Check that the head restraints move up and down smoothly and that the locks hold securely in any latch position.

(d) For fold–down seat backs, check that the latches lock securely.

17. SEAT BELTS

(a) Check that the seat belt system such as the buckles, retractors and anchors operate properly and smoothly.

(b) Check that the belt webbing is not cut, frayed, worn or damaged.

18. ACCELERATOR PEDAL

Check the pedal for smooth operation and uneven pedal effort or catching.

19. CLUTCH PEDAL (See CL section)

Check the pedal for smooth operation.

Check that the pedal has the proper freeplay.

20. BRAKE PEDAL (See BR section)

(a) Check the pedal for smooth operation.

(b) Check that the pedal has the proper reserve distance and freeplay.

(c) Check the brake booster function.

21. BRAKES

At a safe place, check that the brakes do not pull to one side when applied.

22. PARKING BRAKE (See BR section)

(a) Check that the lever has the proper travel.

(b) On a safe incline, check that the vehicle is held securely with only the parking brake applied.

23. AUTOMATIC TRANSMISSION 'PARK' MECHANISM

(a) Check the lock release button of the selector lever for proper and smooth operation.

(b) On a safe incline, check that the vehicle is held securely with the selector lever in "P" position and all brakes released.

UNDER HOOD

24. WINDSHIELD WASHER FLUID

Check that there is sufficient fluid in the tank.

25. ENGINE COOLANT LEVEL

Check that the coolant level is between the 'FULL" and "LOW" lines on the see through reservoir.

26. RADIATOR AND HOSES

(a) Check that the front of the radiator is clean and not blocked with leaves, dirt or bugs.

(b) Check the hoses for cracks, kinks, rot or loose connections.

27. BATTERY ELECTROLYTE LEVEL

Check that the electrolyte level of all battery cells is between the upper and lower level lines on the case.

28. BRAKE AND CLUTCH FLUID LEVELS

Check that the brake and clutch fluid levels are near the upper level line on the see–through reservoirs.

29. ENGINE DRIVE BELTS

Check all drive belts for fraying, cracks, wear or oiliness.

30. ENGINE OIL LEVEL

Check the level on the dipstick with the engine turned off.

31. POWER STEERING FLUID LEVEL

Check the level on the dipstick.

The level should be in the "HOT" or "COLD" range depending on the fluid temperature.

32. AUTOMATIC TRANSMISSION FLUID LEVEL

(a) Park the vehicle on a level surface.

(b) With the engine idling and the parking brake applied, shift the selector into all positions from "P" to "L", and then shift into P position.

(c) Pull out the dipstick and wipe off the fluid with a clean rag. Re–insert the dipstick and check that the fluid level is in the HOT range.

(d) Do this check with the fluid at normal driving temperature (70 – 80˚ C, 158 –176˚).

HINT: Wait until the engine cools down (approx. 30 min.) before checking the fluid level after extended driving at high speeds, in hot weather, in heavy traffic or pulling a trailer.

33. EXHAUST SYSTEM

Visually inspect for cracks, holes or loose supports.

If any change in the sound of the exhaust or smell of the exhaust fumes is noticed, have the cause located and corrected.

MAINTENANCE OPERATIONS

ENGINE

Cold Engine Operations

1. 3VZ–E ENGINE:

REPLACE TIMING BELT

(a) Remove the timing belt.

(See timing belt removal in timing belt in Engine Mechanical)

(b) Install the timing belt.

(See timing belt installation in timing belt in Engine Mechanical)

2. INSPECT DRIVE BELTS

(a) Visually check the belt for excessive wear, frayed cords etc.

HINT:

Conventional type:

- Check that the belt does not touch the bottom of the pulley groove.If necessary, replace the drive belt.

V –Ribbed type:

- Cracks on the rib side of the belt are considered acceptable.

  If the belt has chunks missing from the ribs, it should be replaced.

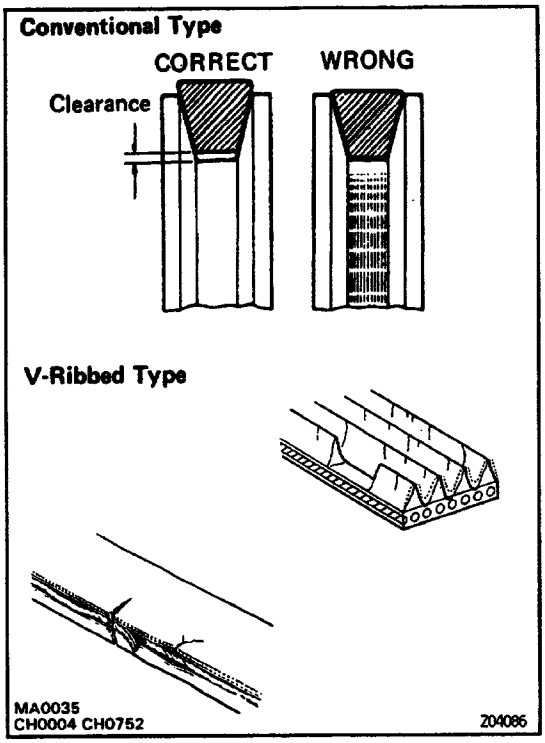

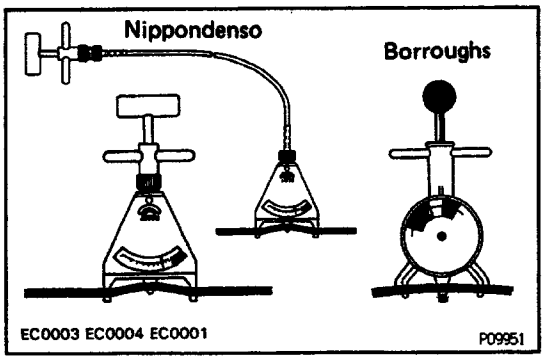

(b) Using a belt tension gauge, check the drive belt tension.

Belt tension gauge:

Nippondenso BTG–20 (95506–00020) or Borroughs No. BT–33–73F

Drive belt tension:

22R–E

Used belt

80 ± 20 lbf

Now belt

125 ± 25 lbf

3vz – E

Generator

Used belt

100 ± 20 lbf

Now belt

160 ± 20 lbf

PS and A/C
Used belt
80 ± 205 lbf
Now belt
125 ± 25 lbf

If necessary, adjust the drive belt tension.

HINT:

- ”New belt” refers to a belt which has been used less than 5 minutes on a running engine.
- ”Used belt” refers to a belt which has been used on a running engine for 5 minutes or more.
- After replacing the drive belt, check that it fits properly in the ribbed grooves, especially in the places difficult to see.
- Check by hand to confirm that the belt has not slipped out of the groove on the bottom of the pulley.
- After installing a new belt, run the engine for approx. 5 minutes and then recheck the tension.

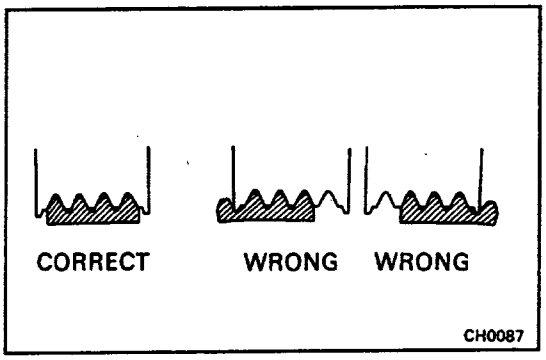

3. REPLACE SPARK PLUGS

(a) Disconnect the high–tension cords at the boot.
Do not pull on the cords.

(b) 22R–E:
Remove the spark plugs.
3VZ–E:

Using plug wrench (16 mm), remove the spark plugs.

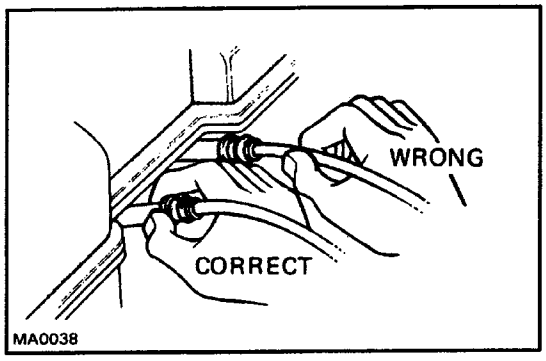

(c) Check the electrode gap of new spark plugs.

Correct electrode gap:
0.8 mm (O.031 in.)
Recommended spark plugs:
22R–E
ND
W 16EXR– U
NGK
BPRSEY
3VZ–E
ND
K16R–U
NGK
BPRSEYA

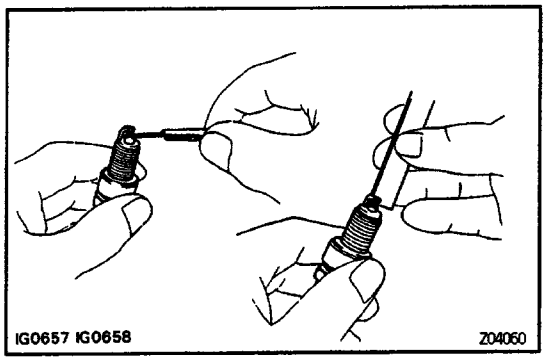

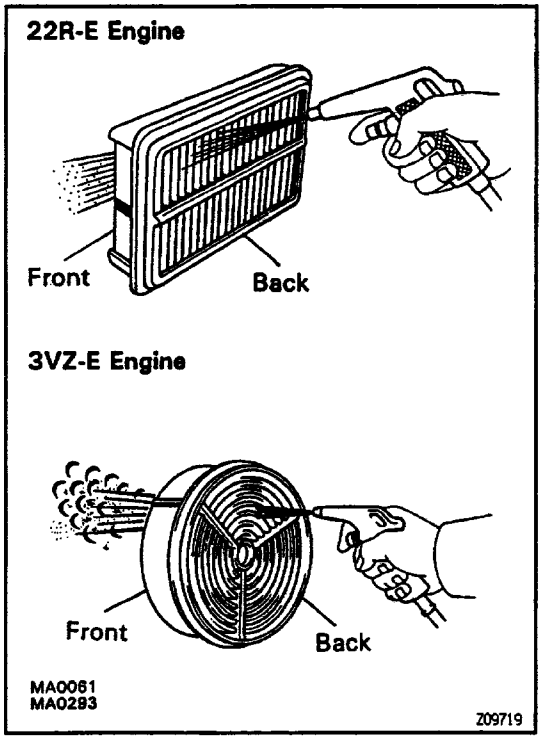

4. INSPECT AIR FILTER

(a) Visually check that the air cleaner element is not excessively dirty, damaged or oily.

HINT: Oiliness may indicate a stuck PCV valve.

If necessary, replace the air cleaner element.

(b) Clean the element with compressed air.

First blow from back side thoroughly, then blow off the front side of the element.

5. REPLACE AIR FILTER

Replace the used air cleaner element with a new one.

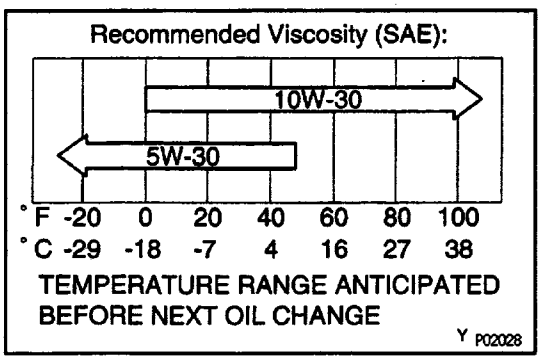

6. REPLACE ENGINE OIL AND OIL FILTER

22R–E: (See oil and filter replacement in Lubrication System)

3VZ– E: (See oil and filter replacement in Lubrication System)

Oil grade:

API grade SH, Energy–Conserving II or ILSAC mul. tigrade engine oil. Recommended viscosity is as shown, in the illustration.

Engine oil capacity:

22R–E

Drain and refill

w/o Oil filter change

3.8 liters (4.0 US qts, 3.3 imp. qts)

w/ Oil filter change

4.3 liters (4.5 US qts, 3.8 imp. qts)

3VZ – E

Drain and refill

w/o Oil filter change

4.2 liters (4.4 US qts, 3.7 Imp. qts)

w/ Oil filter change

4.5 liters (4.8 US qts, 4.0 Imp. qts)

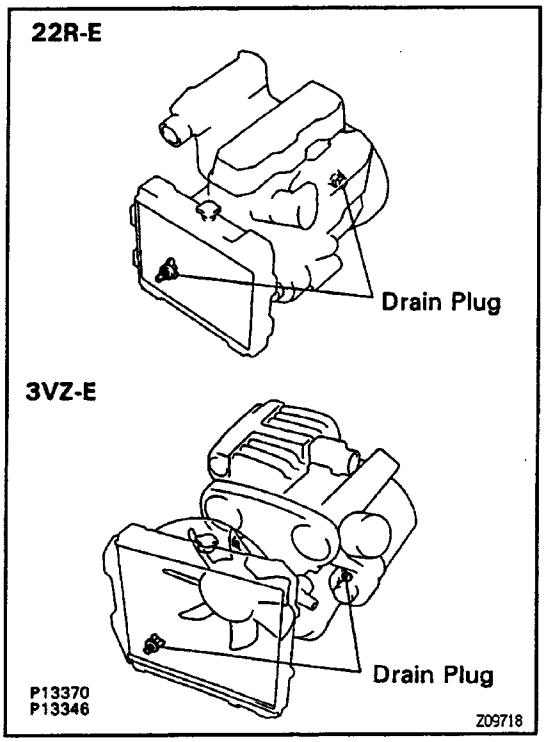

7. REPLACE ENGINE COOLANT

(a) Drain the coolant from the radiator and engine drain plugs. .

(b) Close the drain plugs.

(c) Fill system with coolant.

Coolant capacity (w/ Heater or air conditioner):

22R–E

Except 4WD A/T

8.4 liters (8.9 US qts, 7.4 Imp. qts)

4WD A/T

9.1 liters (9.6 US qts, 7.0 Imp. qts)

3VZ–E

M/T

10.0 liters (10.6 US qts, 8.8 Imp. qts)

A/T

9.8 liters (10.4 US qts, 8.6 imp. qts)

HINT:

- Use a good brand of ethylene – glycol base engine coolant, mixed according to the manufacturer's instructions.
- Using engine coolant which has more than 50 96 ethylene–glycol (but not more than 70 96) is recommended.

NOTICE:

- **Do not use an alcohol type coolant.**
- **The engine coolant should be mixed with demineralized water or. distilled water.**

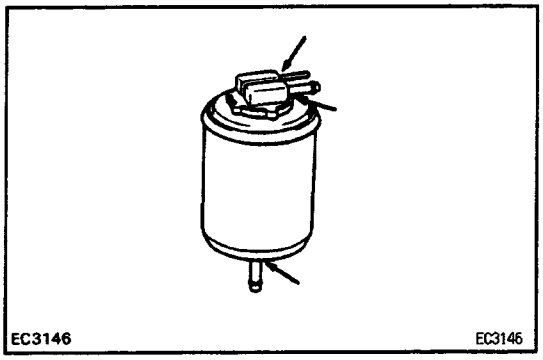

8. CALIFORNIA. MASSACHUSETTS AND NEW YORK: INSPECT CHARCOAL CANISTER

(a) Remove charcoal canister.

HINT: Label hoses for correct installation.

(b) Visually inspect canister case.

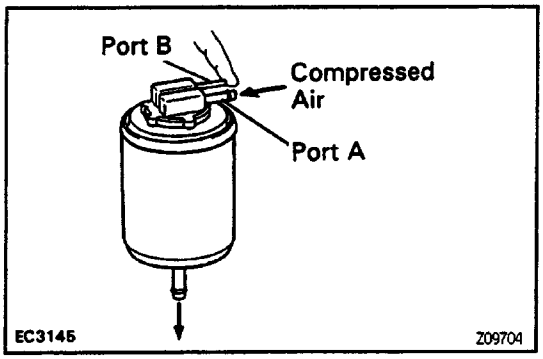

(c) Check for clogged filter and stuck check valve.

- Using low pressure compressed air 4.71 kPa (48 gf/cm2, 0.68 psi), blow into port A and check that air flows without resistance from the other ports.

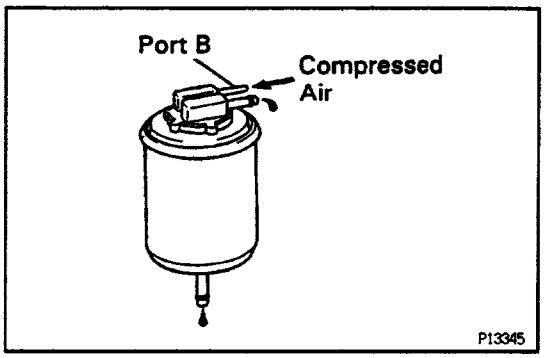

- Blow low pressure compressed air 4.71 kPa (48 gf/cm2, 0.68 psi) into port B and check that air does not flow from the other ports.
  If a problem is found, replace the charcoal canister.

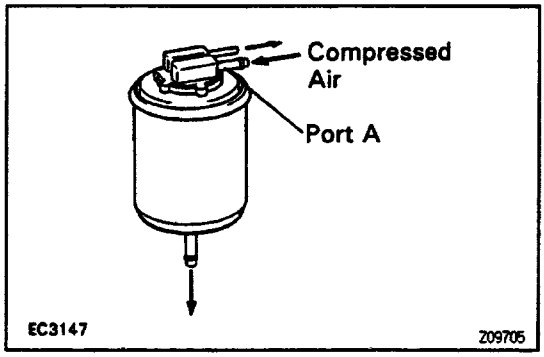

(d) Clean filter in canister.
  Clean the filter by blowing 294 kPa (3 kgf/cmt, 43 psi) of compressed air into port A while holding port B closed.

NOTICE:

- **Do not attempt to wash the canister.**
- **No activated carbon should come out.**

(e) Install the charcoal canister.

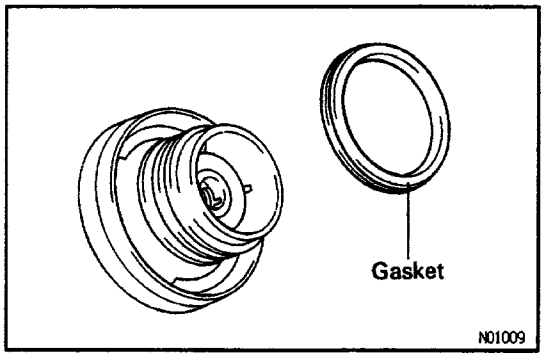

9. REPLACE GASKET IN FUEL TANK CAP

(a) Remove the old gasket (0–ring) from the tank cap.
  Do not damage the cap.
(b) Install a new gasket by hand.
(c) Inspect the cap for damage or cracks.
(d) Install the cap and check the torque limiter.

10. INSPECT FUEL LINES AND CONNECTIONS

Visually inspect the fuel lines for cracks, leakage loose connections, deformation or tank band looseness.

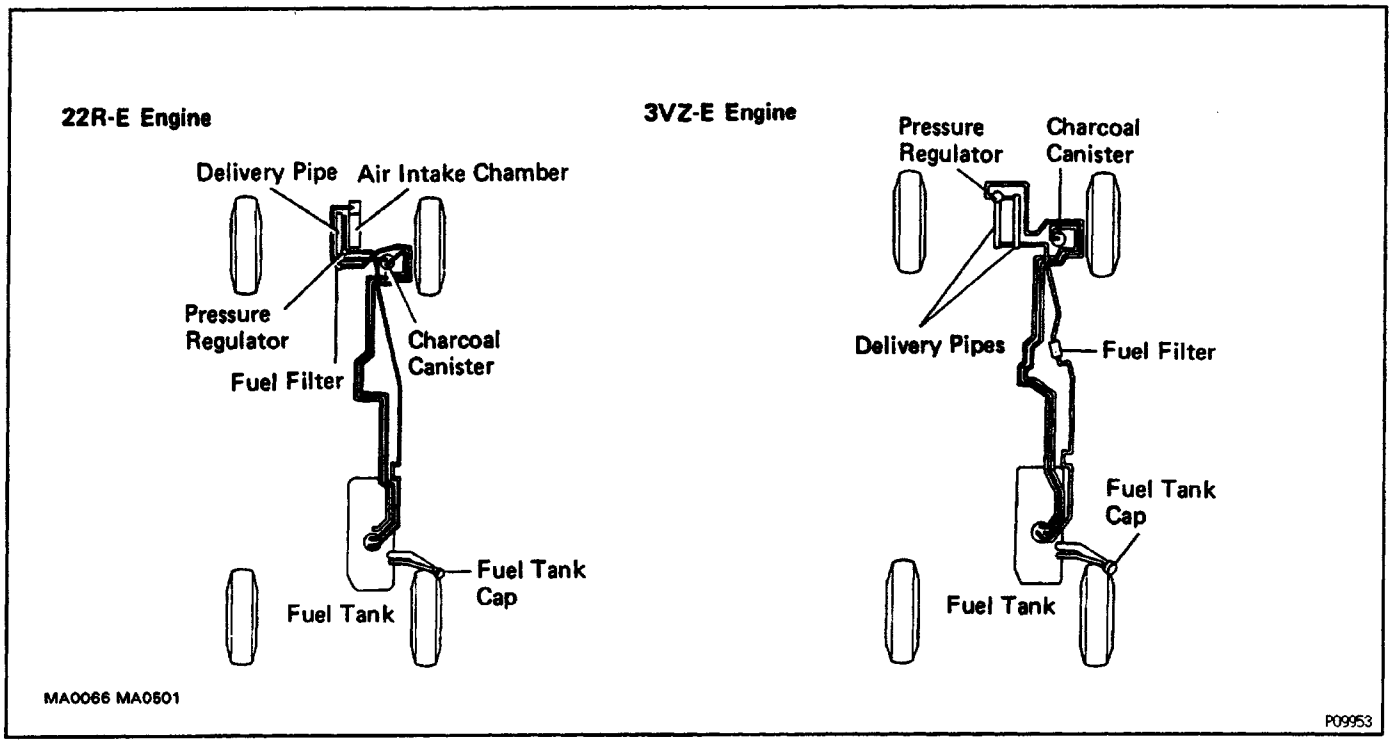

11. INSPECT EXHAUST PIPES AND MOUNTINGS

Visually inspect the pipes, hangers and connections for severe corrosion, leaks or damage.

12. 3VZ– E ENGINE:

ADJUST VALVE CLEARANCE

(See valve clearance inspection and adjustment in tune–up in Engine Mechanical)

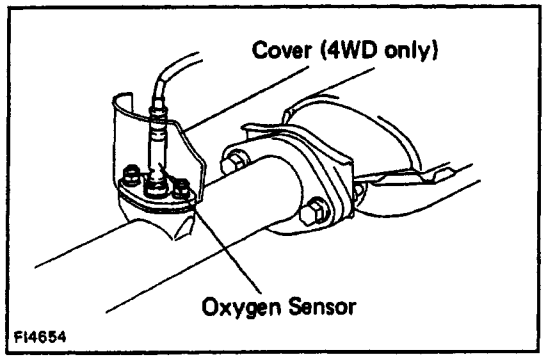

13. EXCEPT CALIFORNIA, MASSACHUSETTS AND NEW YORK

REPLACE HEATED OXYGEN SENSOR

(a) Disconnect the heated oxygen sensor wiring connector.

(b) Remove the cover (4WD), heated oxygen sensor and gasket from the exhaust pipe.

(c) Install a new gasket, heated oxygen sensor and cover (4WD) to the exhaust pipe.

Torque: 20 N–m (200 kgf–cm, 74 ft–lbf)

(d) Inspect heated oxygen sensor operation.

Inspect feedback control.

22R–E: (See heated oxygen sensor in MFI System)

3VZ–E: (See heated oxygen sensor in MFI System)

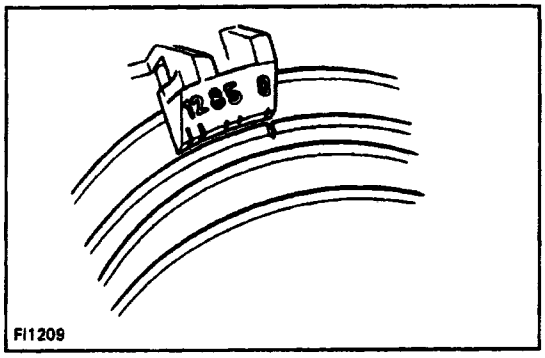

Hot Engine Operations

14. 22R–E ENGINE:

ADJUST VALVE CLEARANCE

(a) Warm up the engine to normal operating temperature.

(b) Stop the engine and remove the cylinder head cover.

(c) Set No. 1 cylinder to TD C/com press ion.

- Turn the crankshaft with a wrench to align the timing marks at TDC. Set the groove on the pulley to the '0' position.
- Check that the rocker arms on No. 1 cylinder are loose and rocker arms on No.4 cylinder are tight. If not, turn the crankshaft one complete revolution and align marks as above.

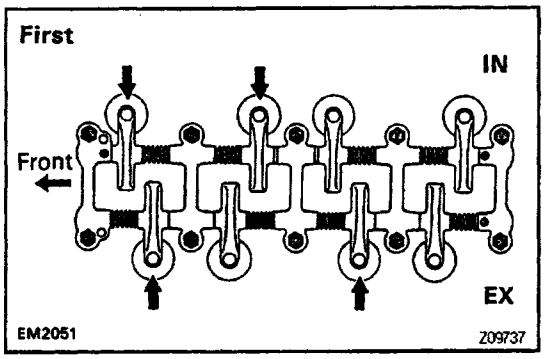

(d) Adjust the clearance of half of the valves.

- **Adjust only the valves indicated by arrows.**

Volvo clearance:

Intake

0.20 mm (0.008 in.)

Exhaust

0.30 mm (0.012 in.)

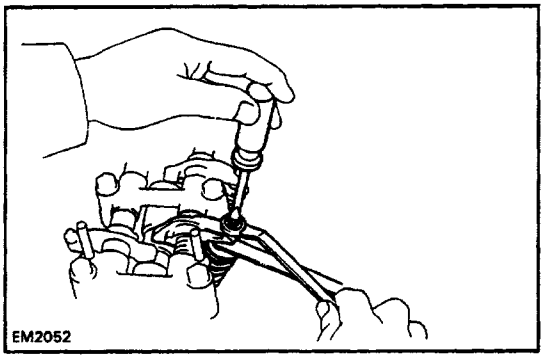

- Use a thickness gauge to measure between the valve stern and rocker arm. Loosen the lock nut and turn the adjusting screw to set the proper clearance. Hold the adjusting screw in position, and tighten the lock nut.
- Recheck the clearance. The thickness gauge should move with a very slight drag.

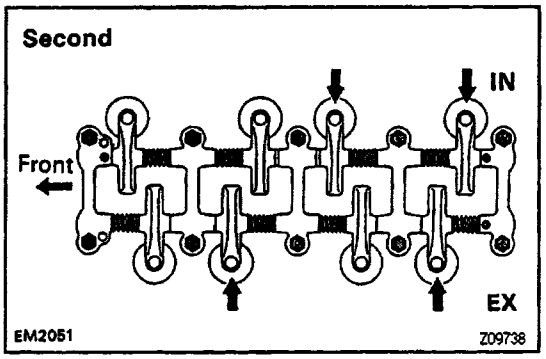

(e) Turn the crankshaft one complete revolution (360˚) and align timing marks in the manner mentioned above. Adjust only the valves indicated by arrows.

(f) Reinstall the cylinder head cover.

15. ADJUST IDLE SPEED

(a) Preparation

- Install air cleaner
- Connect all pipes and hoses of air intake system
- Connect all vacuum lines (EVAP, EGR system, etc.)
- Make sure all MFI system wiring connectors are fully connected
- Engine should be at normal operating temperature
- Switch OFF accessories
- Set transmission in neutral position

(b) Connect a tachometer to the engine

Connect the tachometer test probe to the IG E) terminal of the DLC1.

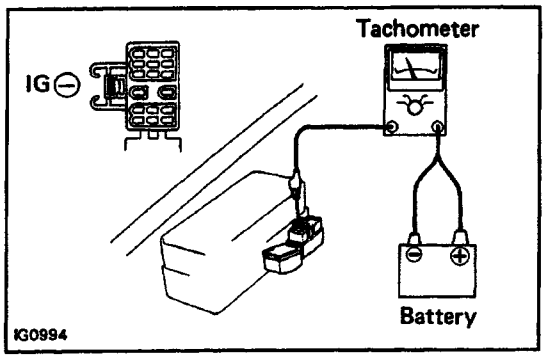

NOTICE:

- **NEVER allow the tachometer terminal to touch ground as It could result in damage to the igniter and/or ignition coil.**
- **As some tachometers are not compatible with this Ignition system, we recommend that you confirm the compatibility of your unit before use.**

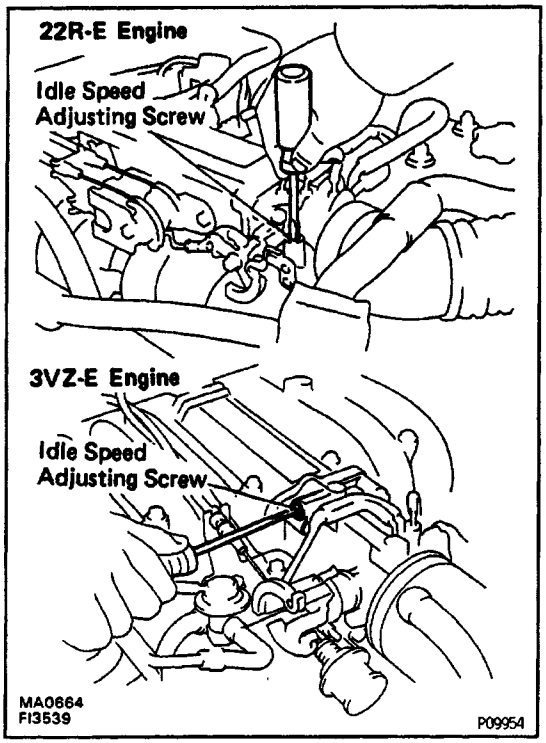

(c) Race the engine at 2,500 rpm for approx. 2 minutes.

(d) Set the idle speed by turning the idle speed adjusting screws.

Idle speed:

22R–E

750 rpm

3VZ–E

800 rpm

(e) Remove the tachometer.

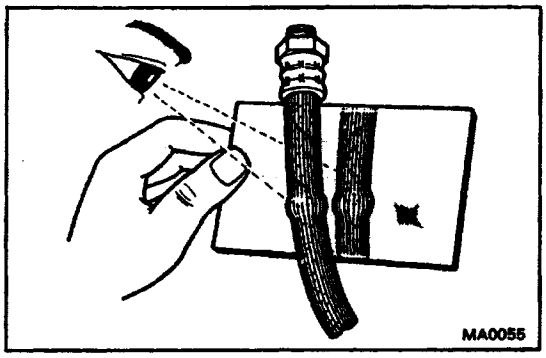

BRAKES

16. INSPECT BRAKE LINE PIPES AND HOSES

HINT: Inspect in a well – lighted area. Inspect the entire circumference and length of the brake hoses using a mirror as required. Turn the front wheels fully
right or left before inspecting the front brake.

(a) Check all brake lines and hoses for:

- Damage
- Wear
- Deformation
- Cracks
- Corrosion
- Leaks
- Bends
- Twists

(b) Check all clamps for tightness and connections for leakage.

(c) Check that the hoses and lines are clear of sharp edges, moving parts and the exhaust system.

(d) Check that the fines installed in grommets pass through the center of the grommets.

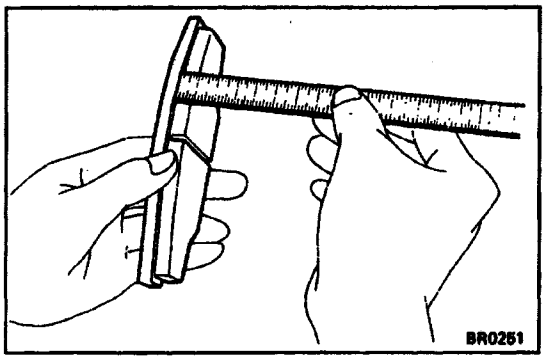

17. INSPECT FRONT BRAKE PADS AND DISCS (See front brake in Brake System)

(a) Check the thickness of the disc brake pad and check for irregular wear.

Minimum lining thickness:
1.0 mm (0.039 in.)

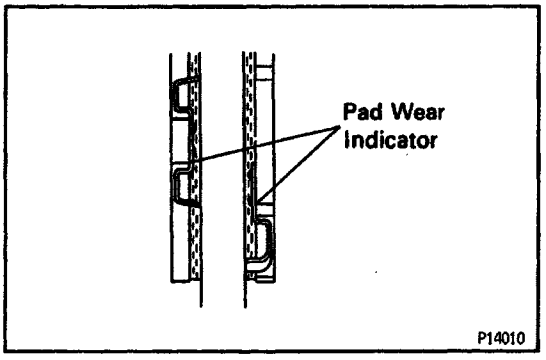

HINT: If a squealing or scraping noise occurs from the brake during driving, check the pad wear indicator. If there are traces of the indicator contacting the disc rotor, the disc pad should be replaced.

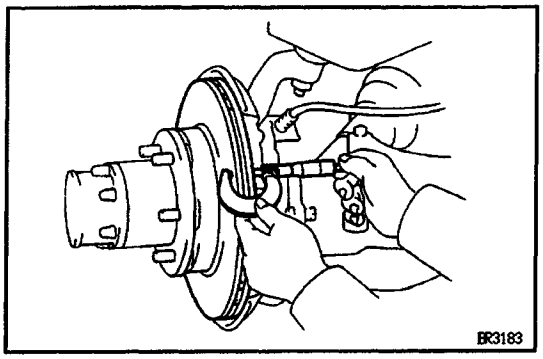

(b) Check the disc for wear.

Minimum disc thickness:
20.0 mm (0.787 in.)

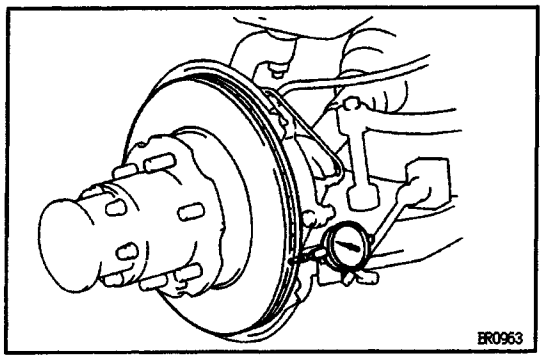

(c) Check the disc for runout.

Minimum disc runout:
0.09 mm (0.0035 in.)

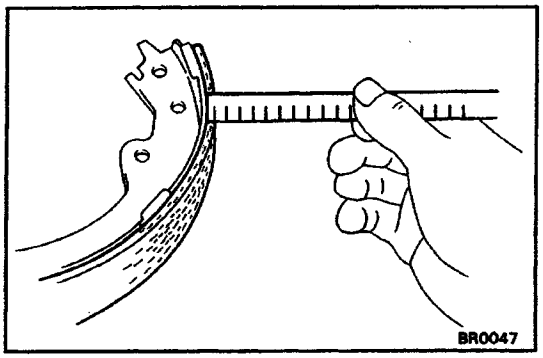

18. INSPECT REAR BRAKE LININGS AND DRUMS
(See rear brake in Brake System)

(a) Check the lining – to – drum contact condition and lining wear.

Minimum lining thickness:
1.0 mm (0.0039 in.)

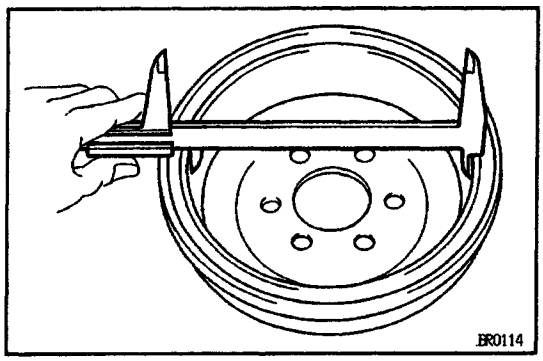

(b) Check the brake drum for scoring or wear.

Maximum drum inside diameter:
297.0 mm (11.693 in.)

(c) Clean the brake parts with a damp cloth.

NOTICE: Do not use compressed air to clean the brake parts.

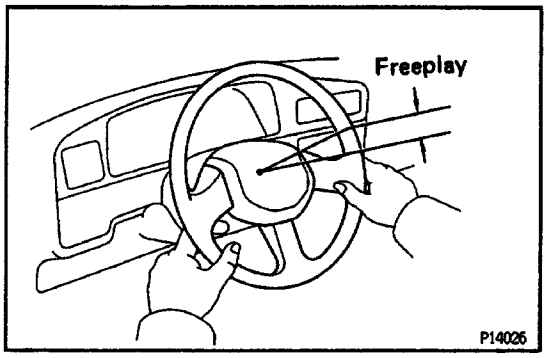

CHASSIS

19. INSPECT STEERING LINKAGE

(a) Check the steering wheel freeplay.

Maximum:

30 mm (1.18 In.)

With the vehicle stopped and pointed straight ahead, rock the steering wheel gently back and forth with light finger pressure.

If incorrect, adjust or repair.

(b) Check the steering linkage for looseness or damage.

Check that:

- Tie rod ends and relay rod ends do not have excessive play.
- Dust seals are not damaged.
- 4WD:
  Boot clamps are not loose.

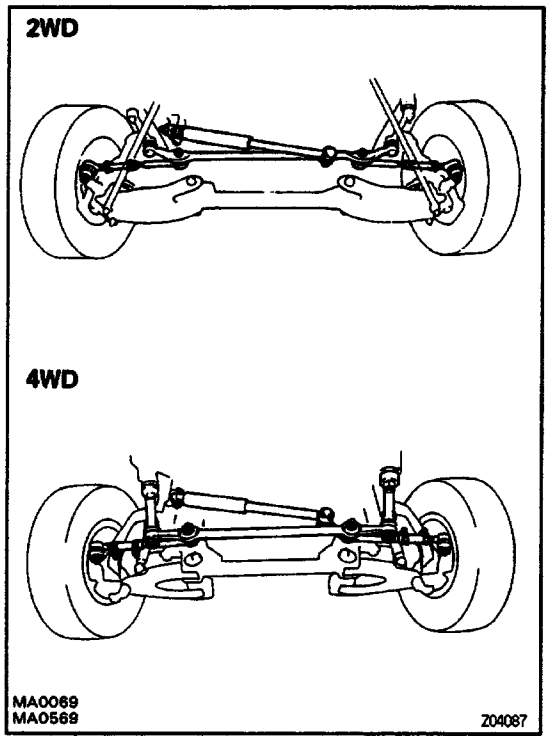

20. INSPECT STEERING GEAR HOUSING

Check the steering gear housing for oil leaks.

If leakage is found, check for cause and repair.

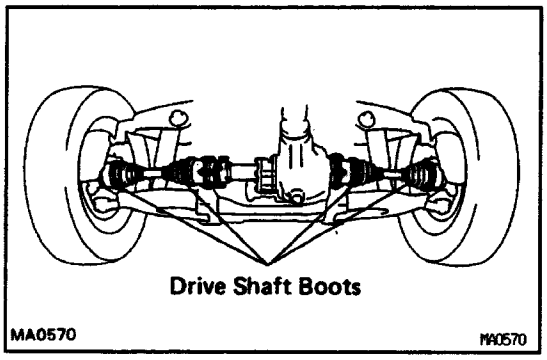

21. 4WD:

INSPECT DRIVE SHAFT BOOTS

Inspect the drive shaft boots for clamp looseness, grease leakage or damage.

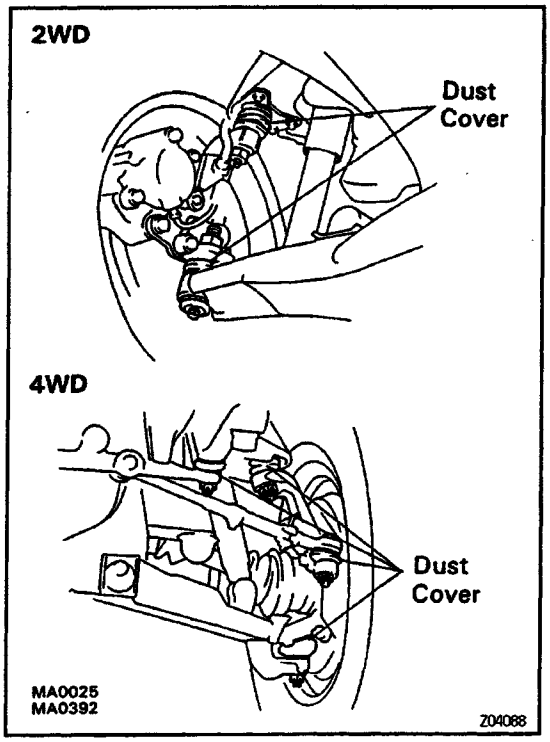

22. INSPECT BALL JOINTS AND DUST COVERS

(a) Inspect the ball joints for excessive looseness.
(See upper and lower ball joint in front suspension in Suspension and Axle)

(b) Inspect the dust cover for damage.

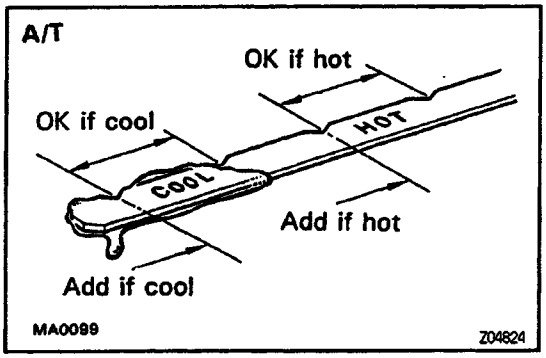

23. 2WD:

CHECK OIL LEVEL IN AUTOMATIC TRANSMISSION AND DIFFERENTIAL

(a) Automatic transmission:

Check the automatic transmission for oil leakage. If leakage is found, check for cause and repair.

Transmission fluid (A/T):

ATF DEXRON®II

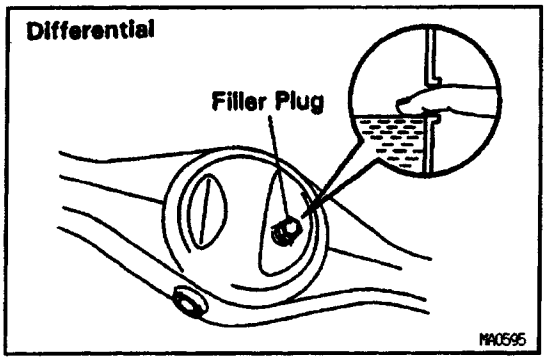

(b) Differential:

Remove the filler plug and feel inside the hole with your finger. Check that the oil comes to within 5 mm (Q.20 in.) of the bottom edge of the hole. If the level is low, add oil until it begins to run out of the filler hole.

Differential oil:

Oil grade

AN GL–5 hypoid gear oil

Viscosity

Above – 18˚ C (0˚ F) SAE 90

Below – 1s˚ C (0˚ F) SAE 8ow – 90 or 80w

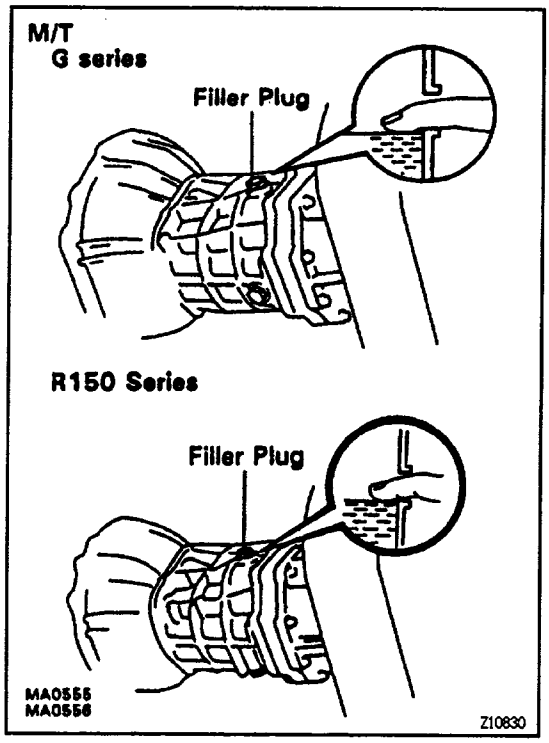

24. 4WD:

CHECK OIL LEVEL IN MANUAL TRANSMISSION, AUTOMATIC TRANSMISSION, TRANSFER AND DIFFERENTIAL

(a) Manual transmission:

Remove the filler plug and feel inside the hole with your finger. Check that the oil comes to within 5 mm (0.20 in.) of the bottom edge of the hole. If the level is low, add oil until it begins to run out of the filler hole.

Transmission oil (M/T):
Oil grade:
API GL–4 or GL–5
Viscosity:
SAE 75W–90

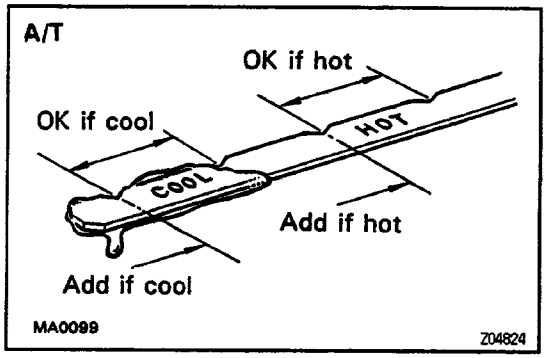

(b) Automatic transmission:

Check the automatic transmission for oil leakage. If leakage is found, check for cause and repair.

Transmission fluid (A/T):
ATF DEXRON®II

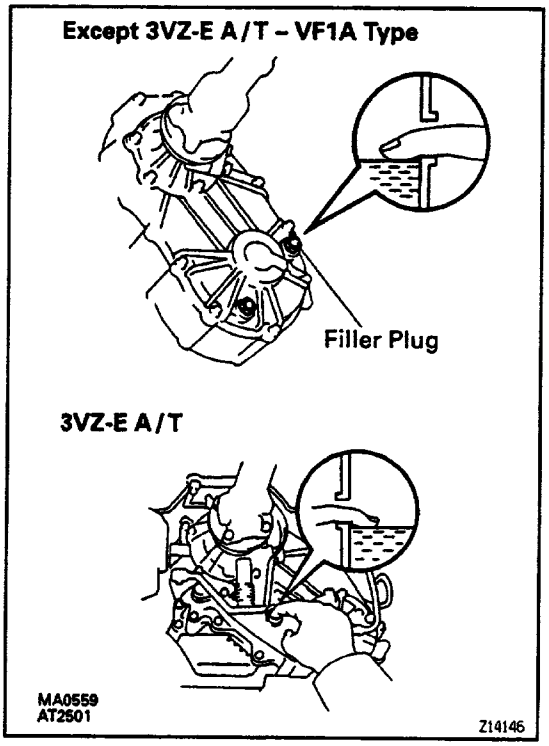

(c) Transfer:

Remove the filler plug and feel inside the hole with your finger. Check that the oil comes to within 5 mm (0.20 in.) of the bottom edge of the hole. If the level is low, add oil until it begins to run out of the filler hole.

Transfer oil (Except 3VZ–E A/T):
Oil grade
AN GL–4 or GL–5
Viscosity
SAE 75W–80
Transfer fluid (3VZ–E A/T):
ATP DEXRON®II

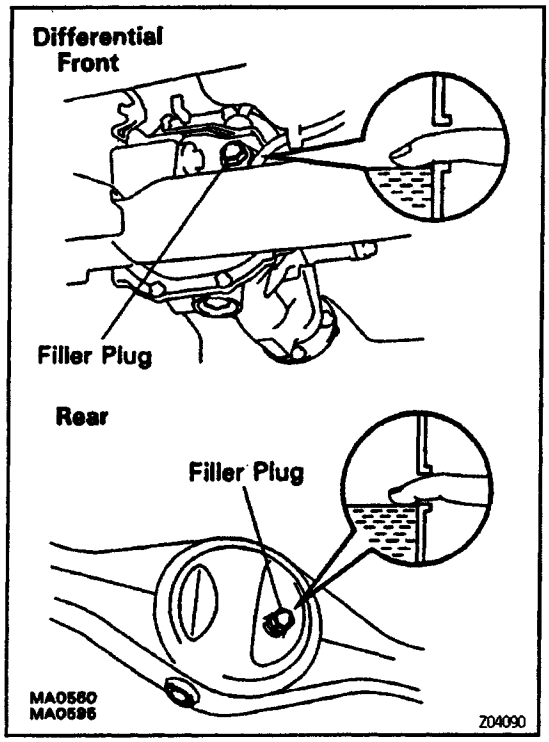

(d) Differential:

Remove the filler plug and feel inside the hole with your finger. Check that the oil comes to within 5 mm (0.20 in.) of the bottom edge of the hole. If the level is low, add oil until it begins to run out of the filter hole.

Differential oil:
Standard differential
Oil grade
API GL–5 hypoid gear oil
Viscosity:
Above –18 ˚ C (0˚ F) SAE 90
Below –18 ˚ C (0˚ F) SAE 80W – 90 or 80W
A.D.D.
Oil grade
Toyota 'GEAR OIL SUPER" oil or hypoid gear oil API GL – 5
Viscosity:
SAE 75W – 90

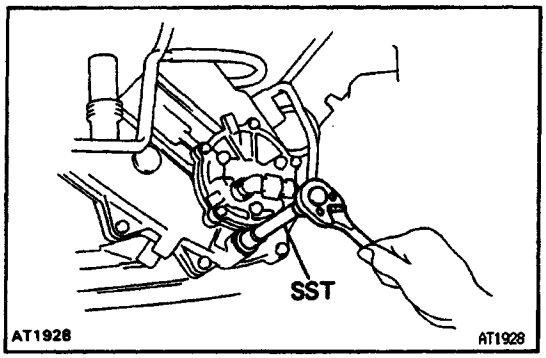

25. REPLACE MANUAL TRANSMISSION, TRANSFER (4WD) AND DIFFERENTIAL OIL

(a) Transfer:

Remove the transfer cover.

(b) Using SST (A340H transfer), remove the drain plug and drain the oil.

SST 09043–38100

(c) Reinstall drain plug securely.

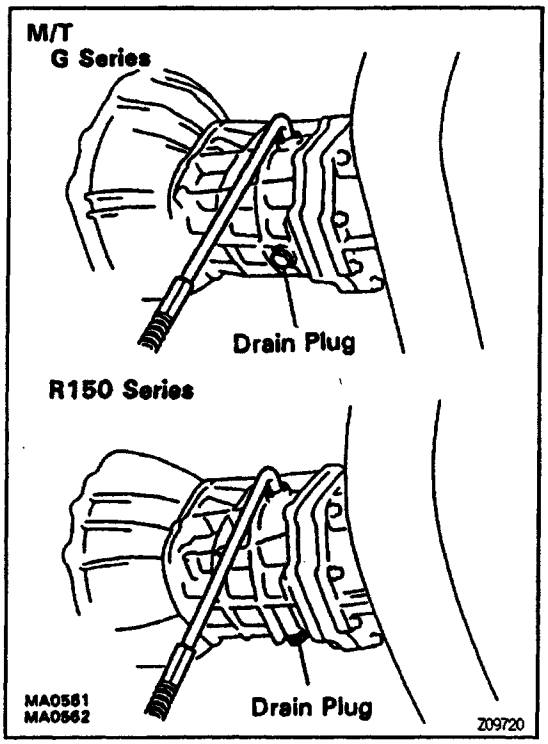

(d) Add new oil until it begins to run out of the filler hole.

Oil grade and viscosity:
See steps 23 and 24
Oil capacity:
Transmission
G58
3.9 liters (4.1 US qts, 3.4 Imp. qts)
R150F
3.0 liters (3.2 US qts. 2.6 Imp. qts)

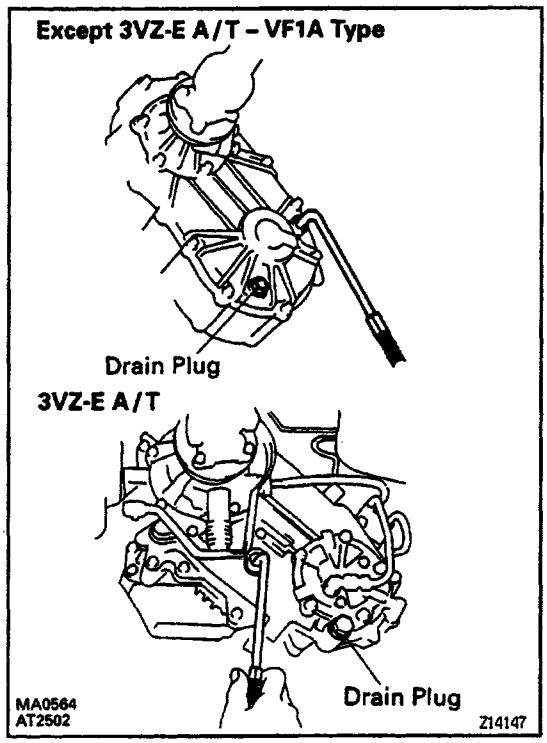

Transfer

Except 3 VZ – E A/T (VF1A type)

1.1 liters (1.2 US qts, 1.0 Imp. qts)

3VZ – E A/T (A340 H)

0.8 liters (0.8 US qts, 0.7 Imp. qts)

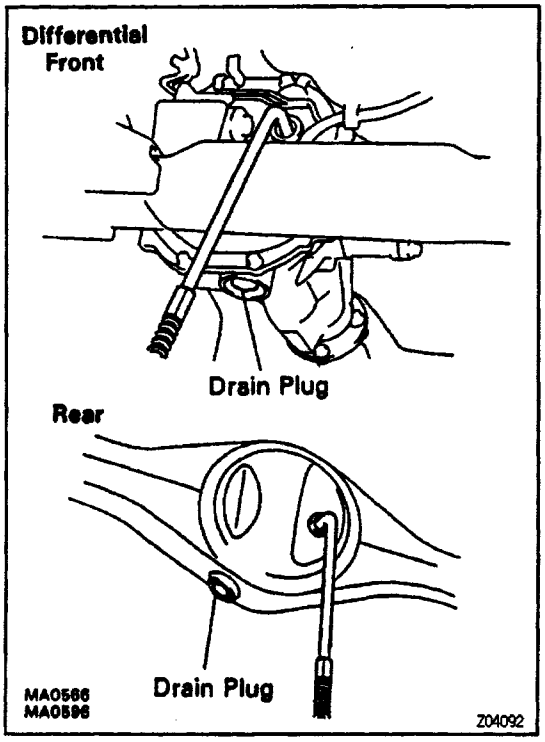

Differential

2WD

1.8 liters (1.9 us qts, 1.s Imp. qts)

4WD

Front standard differential

1.6 liters (1.7 US qts, 1.4 Imp. qts)

A.D.D.

1.86 liters (2.o US qts, 1.6 Imp. qts)

Rear

2.2 liters (2.3 US qts, 1.9 Imp. qts)

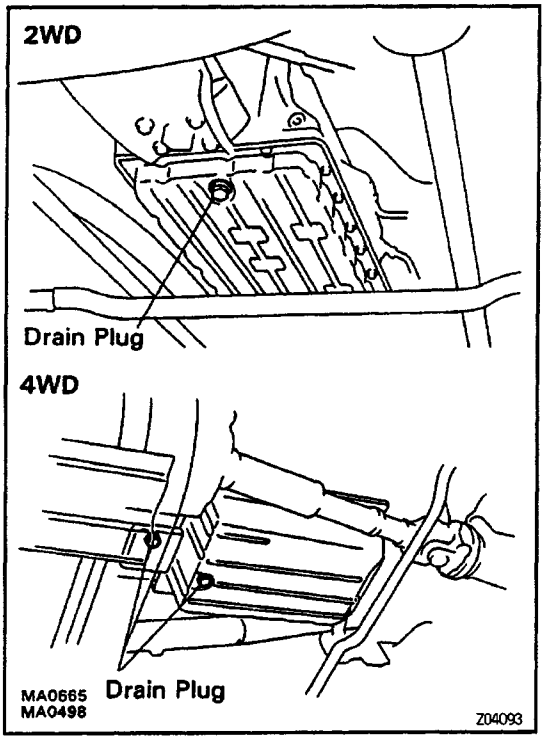

26. REPLACE AUTOMATIC TRANSMISSION FLUID

(a) Remove the drain plug(s) and drain the fluid.

(b) Reinstall the drain plug(s) securely.

(c) With the engine OFF, add new fluid through the dipstick tube.

Fluid:
ATF DEXRON®II
Drain and refill capacity:
2WD
A340E
1.8 liters (1.7 US qts. 1.4 Imp. qts)
4WD
A340H
4.5 liters (4.8 US qts. 4.0 Imp. qts)
A340F
2.0 liters (2.1 US qts, 1.8 Imp. qts)

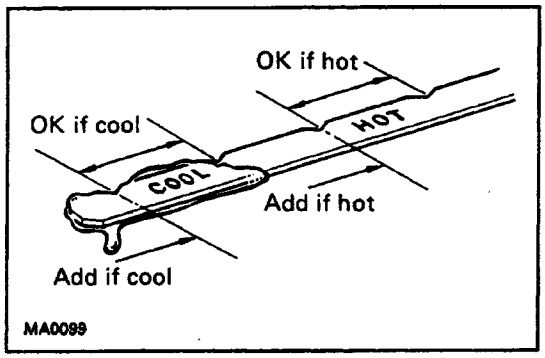

(d) Start the engine and shift the selector into all positions from "P" through "L" and then shift into "P".

(e) A340 H :
Shift the transfer lever position: H2–H4–L4 and L4 –H4–H2.

(f) With the engine idling, check the fluid level.
Add fluid up to the cool level on the dipstick.

(g) Check that the fluid level is in the "HOT" range at the normal operating temperature (70 – 80* C or 158 – 176˚ F) and add as necessary.

NOTICE: Do not overfill.

27. REPACK FRONT WHEEL BEARINGS AND THRUST BUSH

(a) Change the front wheel bearing grease.
(See front axle in Suspension and Axle)
Grease grade:
Lithium base multipurpose grease (NLGI No.2) Wheel bearing friction preload (at starting):
28 – 56 N (2.9 – 5.7 kgf, 6.4 – 12.6 lbf)

(b) Repack the drive shaft thrust bush grease.
(See Suspension and Axle)

28. 4WD:
LUBRICATE PROPELLER SHAFT

Lubricate propeller shaft, referring to the lubrication chart. Before pumping in grease, wipe off any mud and dust on the grease fitting.

Grease grade:
Propeller shaft (Except Double–cardan joint)
Lithium base chassis grease (NLGI No.2)

Double–cardan Joint
Molybdenum disulphide lithium base chassis gross* (NLGI No.2)

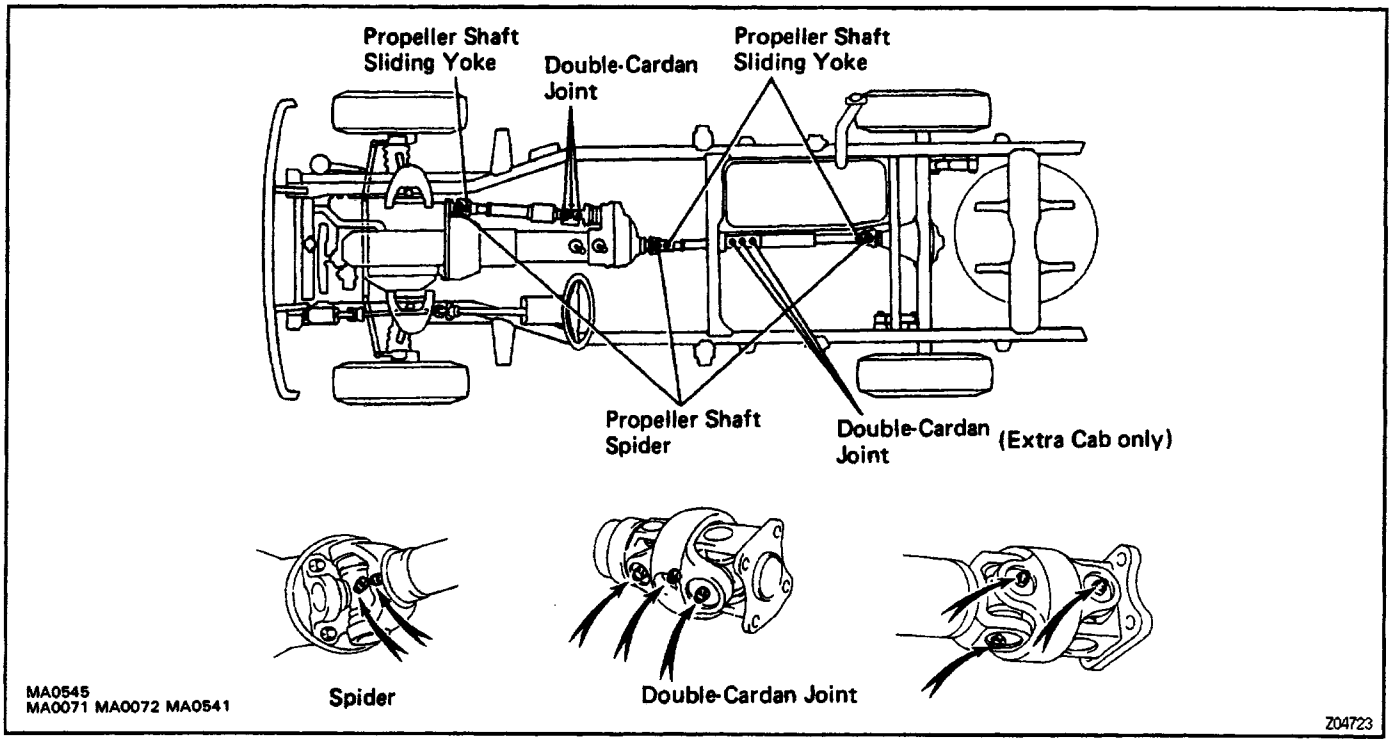

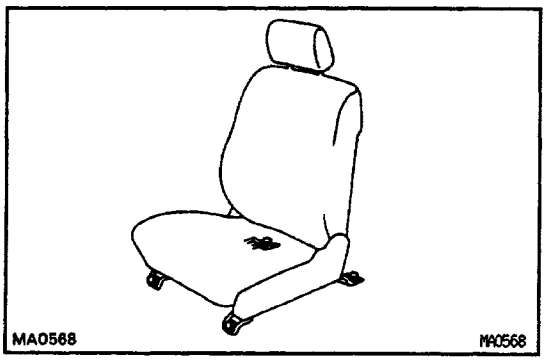

29. TIGHTEN BOLTS AND NUTS ON CHASSIS AND BODY

Tighten these parts:

- Seat mounting bolts
  Torque: 37 N–m (375 kgf–cm, 27 ft–lbf)

Under Severe Conditions:
In addition to the above maintenance items, check for loose or missing bolts and nuts on the following. '

- Steering system
- Drive train
- Suspension system
- Fuel tank mounts
- Engine mounts, etc.

30. FINAL INSPECTION

(a) Check operation of body parts:

- Hood:
  Auxiliary catch operates properly
  Hood locks securely when closed
- Doors:
  Door locks operate properly
  Doors close properly
- Seats:
  Seat adjusts easily and locks securely in any positions
  Seat backs lock securely at any angle
  Fold–down seat backs lock securely

(b) Road test:

- Engine and chassis parts do not have abnormal noises.
- Vehicle does not wander or pull to one side.
  Brakes work properly and do not drag.

(c) Be sure to deliver a clean vehicle and especially check:

- Steering wheel
- Shift lever knob
- All switch knobs
- Door handles
- Seats

MAINTENANCE

MAINTENANCE SCHEDULE

SCHEDULE A

CONDITIONS:

- Towing a trailer, using a camper or car top carrier.
- Repeated short trips of less than 8 krn (5 miles) with outside temperature remaining below freezing.
- Extensive idling and/or low speed driving for long distances, such as police, taxi or door–to –door delivery use.
- Operating on dusty, rough, muddy or salt spread roads.

Maintenance operation: A = Check and adjust if necessary.
R = Replace, change or lubricate.
I = Inspect and correct or replace if necessary.

System	Service interval (Use odometer reading or month*. whichever comes first) / Maintenance items	Maintenance swims beyond 96,000 km (60,000 miles) should continue to be performed at the same intervals shown in each maintenance schedule.																	See page (item No.)
	km x 1,000	6	12	18	24	30	36	42	48	54	60	66	72	78	84	90	96	Months	
	Miles x 1,000	3.75	7.5	11.25	15	18.75	22.5	26.25	30	33.75	37.5	41.25	45	48.75	52.5	56.25	60		
ENGINE	Timing belt (1) 3VZ-E engine																R	–	MA–8 (item 1)
	Valve dearanoe 22R-E engine								A								A	A: Every 36 months	MA–14 (item 14)
	Valve dsersnos 3VZ-E engine																A	A: Every 72 months	MA–13 (item 12)
	Drive betts	I: First period. 48,000 km (30,000 miles) or 36 months, second period, 96,000 km (60,000 miles) or 72 months. I: After that, every 12,000 km (7,500 miles) or 12 months.																	MA–8 (item 2)
	Engine or and oil filter*	R	R	R	R	R	R	R	R	R	R	R	R	R	R	R	R	R: Every 6 months	MA–10 (item 6)
	Engine coolant	R: First period. 72,000 km (45,000 miles) or 36 months R: After that every 48,000 km (30,000 miles) or 24 months.																	MA–11 (item 7)
	Exhaust pipes and mountings				I				I				I				I	I: Every 24 months	MA–13 (item 11)
FUEL	Idle speed	A: First period. 12,000 km (7,500 miles) or 12 months, second period, 24,000 km (15,000 miles) or 24 months. A: After that, every 48,000 km (30,000 miles) or 24 months.																	MA–15 (item 15)
	–Air filter*(2)	I	I	I	I	I	I	I	R	I	I	I	I	I	I	I	R	I: Every 6 months R: Every 36 months	MA–10 (item 4,5)
	Fuel lines and connections (3)								I								I	I: Every 36 months	MA–12 (item 10)
	Fuel tank cap gasket																R	R: Every 72 months	MA–12 (item 10)
IGNITION	Spark plugs**								R								R	R: Every 36 months	MA–9 (item 3)
EVAP	Charcoal canister (4)																I	I: Every 72 months	MA–11 (item 8)
EXHAUST	Heated oxygen¿sensor	R: 129,000 km (80,000 miles) only																	MA–13 (item 13)
BRAKES	Broke linings and drums		I		I		I		I		I		I		I		I	I: Every 12 months	MA–11 (Item 18)
	Broke pads and disks		I		I		I		I		I		I		I		I	I: Every 12 months	MA–16 (item 17)
	Broke line pipes end hoses				I				I				I				I	I: Every 24 months	MA–16 (item 16)
CHASSIS	Steering linkage		I		I		I		I		I		I		I		I	I: Every 12 months	MA–18 (item 19)
	Sell joint and dust covers		I		I		I		I		I		I		I		I	I: Every 12 months	MA–19 (item 22)
	Drive shaft boots . 4WD		I		I		I		I		I		I		I		I	I: Every 12 months	MA–18 (item 21)
	Automatic transmission, manual transmission, transfer (4WD) and differential				R				R				R				R	R: Every 24 months	MA–19 (item 23) MA–20 (item 24) MA–21 (item 25) MA–23 (item 26)
	Steering 9esr housing oil (5)				I				I				I				I	I: Every 24 months	MA–18 (item 2O
	Front wheel bearing and thrust bush grease (4WD) 2WD								R								R	R: Every 48 months	MA–23 (item 27)
	4WD								R								R	R: Every 36 months	
	Propeller shaft presse (6) 4WD		R		R		R		R		R		R		R		R	R: Every 12 months	MA–23 (item 28)
	Bolts and nuts on chassis and body (7)		I		I		I		I		I		I		I		I	I: Every 12 months	MA–24 (item 29)

⁎ or ◆ mark indicates maintenance which is part of the warranty conditions for the Emission Control Systems. The warranty period is in accordance with the owner's guide or the warranty booklet.
⁎ : For vehicles sold in California, Massachusetts, New York, New Jersey and Connecticut only
◆ : For vehicles sold outside California, Massachusetts, New York, New Jersey and Connecticut

(1) Applicable to vehicles operated under conditions of extensive idling and/or low speed driving for long distances such as police, taxi or door–to–door delivery use.
(2) Applicable when operating mainly on dusty roads. If not, apply SCHEDULE B.
(3) Includes inspection of fuel tank band and vapor vent system.
(4) Non–maintenance item except for California, Massachusetts, New York, New Jersey and Connecticut.
(5) Check for oil leaks from steering gear box.
(6) If the propeller shaft has been immersed in water, it should be re–greased daily.
(7) Applicable only when operating mainly on rough, muddy roads. The applicable parts are listed below. For other usage conditions, refer to SCHEDULE B.

- Front and rear suspension member to cross body.
- Bolts for sheet installation.

SCHEDULE B

CONDITIONS:

Conditions others than those listed for SCHEDULE A.

Maintenance operation: A = Check and adjust if necessary.
R = Replace, change or lubricate.
I = Inspect and correct or replace if necessary.

System	Serve interval (Use odometer reading or months, whichever comes first) / Maintenance Items	Maintenance services beyond 98,000 km 180,000 miles) should continue to be performed at the same intervals shown in each maintenance schedule.										See page (Item No.)
		km x 1,000	12	24	36	48	60	72	84	96	Months	
		Miles x 1,000	7.5	15	22.5	30	37.5	45	52.5	60		
ENGINE	Valve clearance	22R-E engine				A				A	A: Every 36 months	MA–14 (item 14)
	Valve clearance	3VZ-E Engine								A	A: Every 72 months	MA–13 (item 12)
	Drive belts	I: First period. 48,000 km (30,000 miles) or 36 months, second period, 96,000 km (60,000 miles) or 72 months. I: After that, every 12,000 km (7,500 miles) or 12 months.										MA–8 (item 2)
	Engine oil and oil filter*		R	R	R	R	R	R	R	R	R: Every 12 months	MA–10 (item 6)
	Engine coolant	R: First period. 72,000 km (45,000 miles) or 36 months. R: After that, every 48,000 km (30,000 miles) or 24 months.										MA–11 (item 7)
	Exhaust pipes and mountings					I				I	I: Every 36 months	MA–13 (item 11)
FUEL	Idle speed	A: First period. 72,000 km (7,500 miles) or 12 months, second period, 24,000 km (15,000 miles) or 24 months. A: After that, every 24,000 km (15,000 miles) or 24 months.										MA–15 (item 15)
	Air Filter*					R				R	R: Every 36 months	MA–10 (item 5)
	Fuel lines and connections					I				I	I: Every 36 months	MA–t2 (item 10)
	Fuel tank cap gasket (11)									R	R: Every 72 months	MA–12 (item 9)
IGNITION	Spark plugs**					R				R	R: Every 36 months	MA–9 (item 3)
EVAP	Charcoal canister (2)									I	I: Every 72 months	MA–11 (item 8)
EXHAUST	Heated oxygen sensor	R: 129,000 km (80,000 miles) only										MA–13 (item 13)
BRAKES	Broke linings and drums			I		I		I		I	I: Every 24 months	MA–17 (item 18)
	Broke pods and discs			I		I		I		I	I: Every 24 months	MA–16 (item 17)
	Broke line pipes and hoses			I		I		I		I	I: Every 24 months	MA–1 6 (item 16)
CHASSIS	Steering linkage			I		I		I		I	I: Every 24 months	MA–18 (item 19)
	Ball joints and dust covers			I		I		I		I	I: Every 24 months	MA–19 (item 22)
	Drive shaft boots 4WD			I		I		I		I	I: Every 24 months	MA–18 (item 21)
	Automatic transmission, manual transmission, transfer KW01 and differential (3)			I		I		I		I	I: Every 24 months	MA–19 (item 23) MA–20 (item 24)
	Steering gear housing oil (4)			I		I		I		I	I: Every 24 months	MA–18 (item 20)
	Front wheel! bearing and thrust bush grease (4WD) 2WD					R				R	R: Every 48 months	MA–23 (item 27)
	4WD					R				R	R: Every 36 months	
	Propeller shah grease (5) 4WD			R		R		R		R	R: Every 24 months	MA–23 (item 28)
	Bolts and nuts on chassis and body (6)			I		I		I		I	I: Every 24 months	MA–24 (item 29)

⁎ or ◆ mark indicates maintenance which is part of the warranty conditions for the Emission Control Systems. The warranty period is in accordance with the owner's guide or the warranty booklet.
⁎ : For vehicles sold in California, Massachusetts, New York, New Jersey and Connecticut only
◆ : For Vehicles sold outside California, Massachusetts, New York, New Jersey and Connecticut

(1) Includes inspection of fuel tank band and vapor vent system.
(2) Non–maintenance item except for California, Massachusetts, New York, New Jersey and Connecticut.
(3) Check for oil level.
(4) Check for oil leaks from steering gear box.
(5) If the propeller shaft has been immersed in water, it should be re–greased daily.
(6). The applicable parts are listed below.

- Front and rear suspension member to cross body.
- Bolts for sheet installation.

PREPARATION

EQUIPMENT

Belt tension gauge	
Dial indicator with magnetic base	
Micrometer	
Mirror	Broke hose
Steel square	
Thermometer	
Torque wrench	
Vernier calipers	

ENGINE COOLANT

Item	Capacity	Classification
22–R		Ethylene–glycol bass
Except 4WD A/T	8.4 liters (8.9 US qts, 7.4 Imp. qts)	
4WD A/T	9.1 liters (9.6 US qts, 7.0 Imp. qts)	
3vz– e		
M/T	10.0 liters (10.6 US qts, 8.8 Imp. qts)	
A/T	9.8 liters (10.4 US qts, 8.6 Imp. qts)	

LUBRICANT

Item	Capacity	Classification
Engine oil 22R–E Drain and refill w/o Oil filter change w/ Oil filter change 3VZ–E Drain and refill w/o Oil filter change w/ Oil filter change	 3.8 liters (4.0 US qts, 3.3 Imp. qts) 4.3 liters (4.5 US qts, 3.8 Imp. qts) 4.2 liters (4.4 US qts, 3.7 Imp. qts) 4.5 liters (4.8 US qts, 4.0 Imp. qts)	API grade SH, Energy–Conserving Ii or ILSAC multigrade and recommended viscosity oil.
Manual transmission oil G58 R150F	 3.9 liters (4.1 US qts, 3.4 Imp. qts) 3.0 liters (3.2 US qts, 2.6 Imp. qts)	API GL–4 or GL–5 SAE 75W–90
Automatic transmission fluid Drain and refill A340E A340H A340F	 1.6 liters (1.7 US qts, 1.4 Imp. qts) 4.5 liters (4.8 US qts, 4.0 Imp. qts) 2.0 liters (2.1 US qts, 1.8 Imp. qts)	ATF DEXRON® II
Transfer oil Except 3VZ – E A/T (VF 1 A type) 3VZ–E A/T (A340H)	 1.1 liters (1.2 US qts, 1.0 Imp. qts) 0.8 liters (0.8 US qts, 0.7 Imp. qts)	Except 3VZ–E API GL–4 or GL–5 75W–90 3VZ–E ATF DEXRON® II
Differential oil 2WD 4WD Front Standard A.D.D. Rear	 1.8 liters (1.9 US qts, 1.6 Imp. qts) 1.6 liters (1.7 US qts, 1.4 Imp. qts) 1.86 liters (2.0 US qts, 1.6 Imp. qts) 2.2 liters (2.3 US qrs, 1.9 Imp. qts)	API GL–5 hypoid gear oil Above –18°C (0°F) SAE 90 Below –18°C (0°F) SAE 80W–90 or 80W

SERVICE SPECIFICATIONS

SERVICE DATA

Drive belt tension		
22R–E		
	New belt	80 ± 20 lbf
	Used belt	125 ± 25 lbf
3VZ–E		
Generator	New belt	160 ± 20 lbf
	Used belt	100 ± 20 lbf
PS	New belt	125 ± 25 lbf
	Used belt	80 ± 20 lbf
A/C	New belt	125 ± 25 lbf
	Used belt	80 ± 20 lbf
Spark plug		
22R–E		
Recommended spark plug	ND	W16EXR
	NGK	BPR5EY
Correct electrode gap		0.8 mm (0.031 in.)
3VZ–E		
Recommended spark plug	ND	K16R–U
	NGK	BPR5EYA
Correct electrode gap		0.8 mm (0.031 in.)
Valve clearance		
22R–E	Intake	0.20 mm (0.008 in.)
	Exhaust	0.30 mm (0.012 in.)
3VZ–E	Intake	0.18 – 0.28 mm (0.007 – 0.011 in.)
	Exhaust	0.22 – 0.32 mm (0.009 – 0.013 in.)
Idle speed		
22R–E		750 rpm
3VZ–E		800 rpm
Front brake		
Pad thickness	Minimum	1.0 mm (0.039 in.)
Disc thickness	Minimum	20.0 mm (0.787 in.)
Disc runout	Maximum	0.09 mm (0.0035 in.)
Rear brake		
Lining thickness	Minimum	1.0 mm (0.039 in.)
Drum inside diameter	Maximum	297.0 mm (11.693 in.)
Steering wheel freeplay	Maximum	30 mm (1.18 in.)
Wheel bearing friction preload (at starting)		28 – 56 N (2.9 – 5.7 kgf, 6.4 – 12.6 lbf)

TORQUE SPECIFICATIONS

Part tightened	N·m	kgf·cm	ft·lbf
Front seat mount bolts	37	375	27

ASSEMBLY REMOVAL AND INSTALLATION

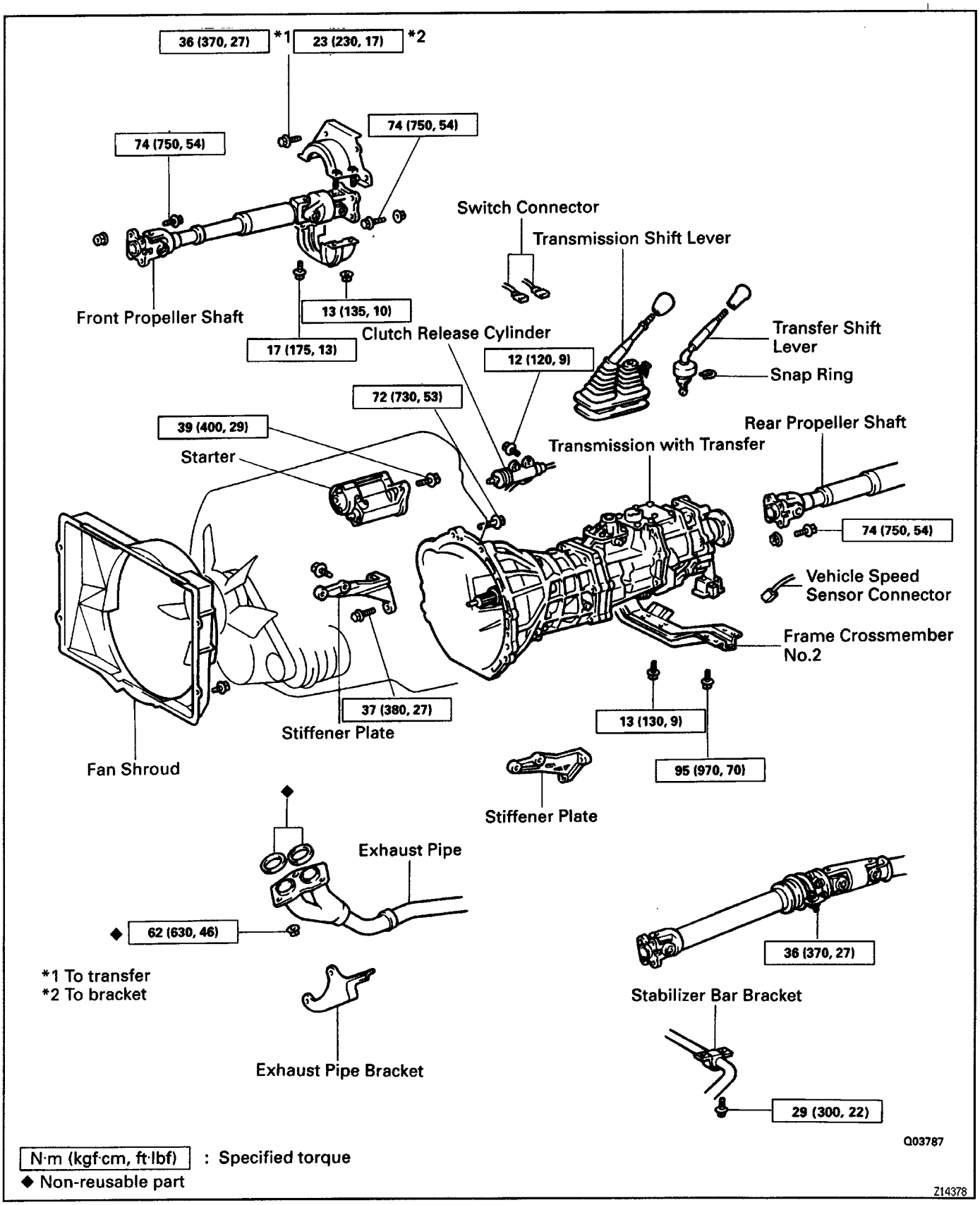

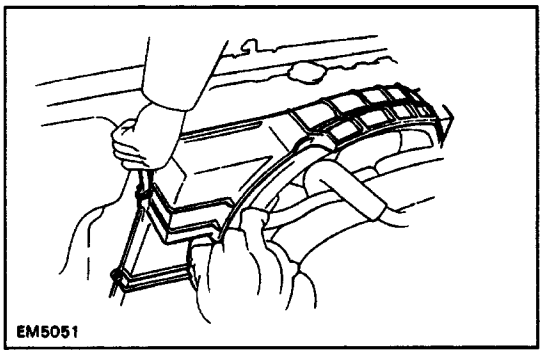

TRANSMISSION REMOVAL

1. DISCONNECT NEGATIVE (–) TERMINAL CABLE FROM BATTERY

2. REMOVE FAN SHROUD SET BOLTS

Remove the 4 bolts.

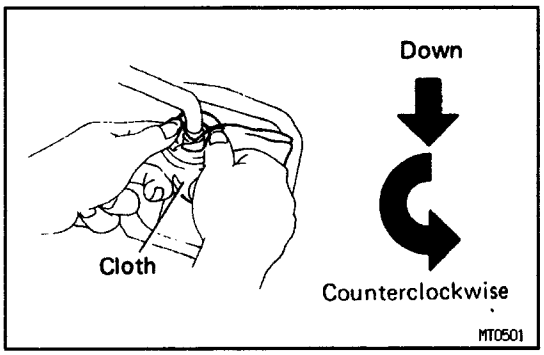

3. REMOVE TRANSMISSION SHIFT LEVER FROM INSIDE OF VEHICLE

(a) Remove the 4 screws and shift lever boot retainer.
(b) Pull up the shift lever boot.
(c) Cover the shift lever cap with a cloth.
(d) Then, pressing down on the shift lever cap, rotate it counterclockwise to remove.
(e) Remove the shift lever.

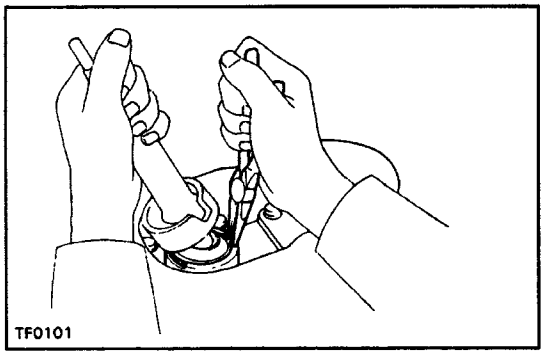

4. REMOVE TRANSFER SHIFT LEVER FROM INSIDE OF VEHICLE

Using pliers, remove the snap ring and pull out the shift lever from the transfer.

5. RAISE VEHICLE AND DRAIN TRANSMISSION AND TRANSFER OIL

NOTICE: Be sure the vehicle is securely supported.

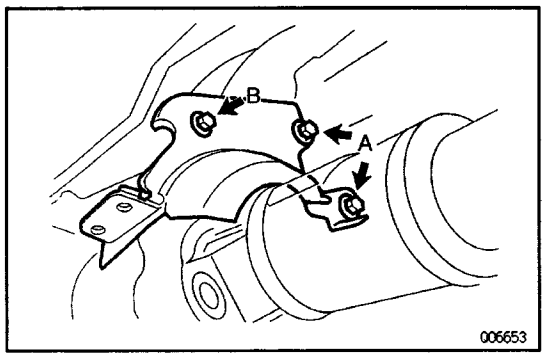

6. REMOVE PROPELLER SHAFT DUST COVER SUB–ASSEMBLY

Remove the 3 bolts and cover.

7. DISCONNECT FRONT AND REAR PROPELLER SHAFT

(See page PR–7**)**

8. DISCONNECT VEHICLE SPEED SENSOR, BACK–UP LIGHT SWITCH CONNECTOR AND TRANSFER INDICATOR SWITCH CONNECTOR

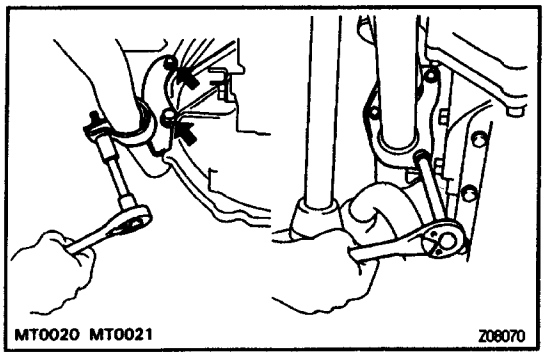

9. REMOVE EXHAUST PIPE CLAMP AND PIPE

(a) Remove the exhaust pipe clamp.

(b) Remove the 2 bolts and exhaust pipe bracket from the clutch housing.

(c) Remove the 3 nuts, exhaust pipe and 2 gaskets from the exhaust manifold.

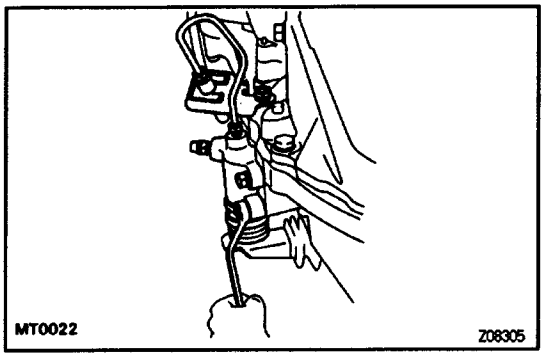

10. REMOVE CLUTCH RELEASE CYLINDER AND LINE BRACKET

Remove the 2 bolts and lay the cylinder alongside the engine.

HINT: Do not disconnect the clutch line.

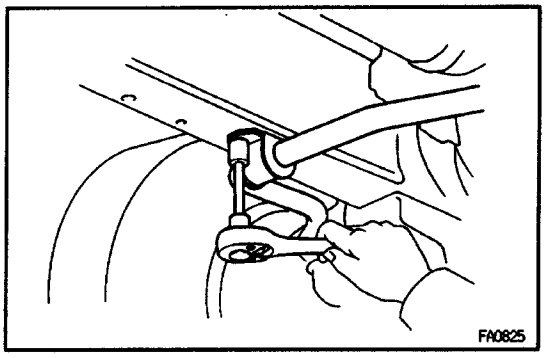

11. REMOVE STABILIZER BAR BRACKET SET BOLTS

Remove the 4 bolts.

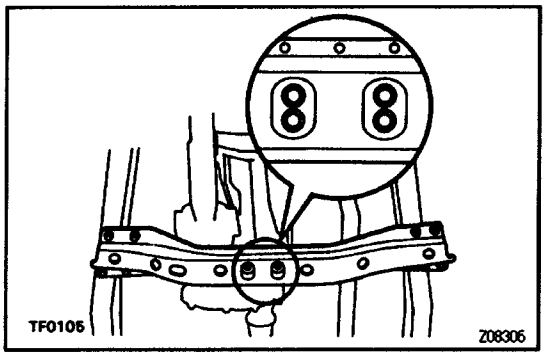

12. REMOVE NO. 2 FRAME CROSSMEMBER FROM SIDE FRAME

(a) Remove the 4 bolts from the engine rear mounting.

(b) Using a transmission jack, support the transmission.

(c) Remove the 8 bolts and No.2 frame crossmember from the side frame.

13. PLACE PIECE OF WOOD BETWEEN ENGINE OIL PAN AND FRONT AXLE

14. LOWER TRANSMISSION WITH TRANSFER

15. REMOVE STARTER

(a) Remove the 2 bolts and starter.

(b) Lay the starter alongside the engine.

16. REMOVE EXHAUST PIPE BRACKET AND STIFFENER PLATE BOLTS

17. REMOVE REMAINING TRANSMISSION BOLTS

18. REMOVE TRANSMISSION WITH TRANSFER

Remove the transmission with the transfer toward the rear of the vehicle.

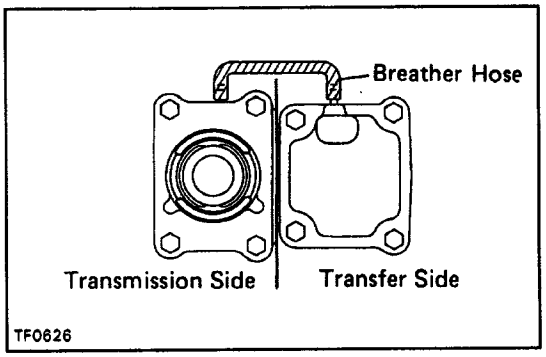

19. REMOVE BREATHER HOSE

Disconnect the breather hose from the transfer upper cover and transmission control retainer.

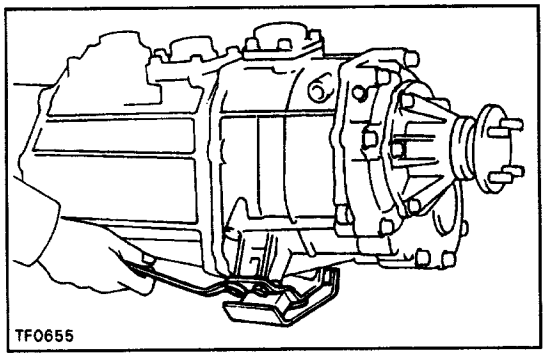

20. REMOVE ENGINE REAR MOUNTING

Remove the 4 bolts and engine rear mounting from the transfer.

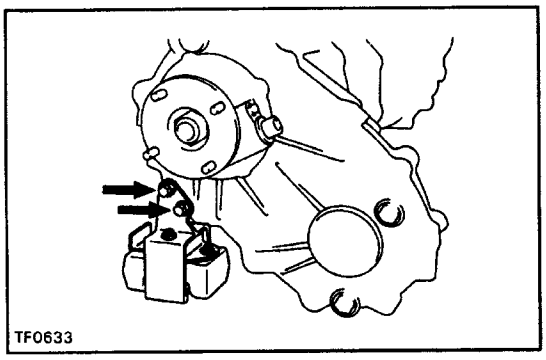

21. Regular Cab w/Planetary Gear Type Transfer: REMOVE DYNAMIC DAMPER

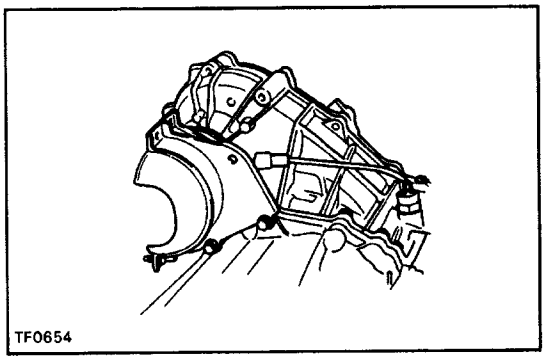

22. REMOVE PROPELLER SHAFT UPPER DUST COVER AND TRANSFER FROM TRANSMISSION

(a) Remove the dust cover bolt from the bracket.

(b) Remove the transfer adaptor rear mounting bolts.

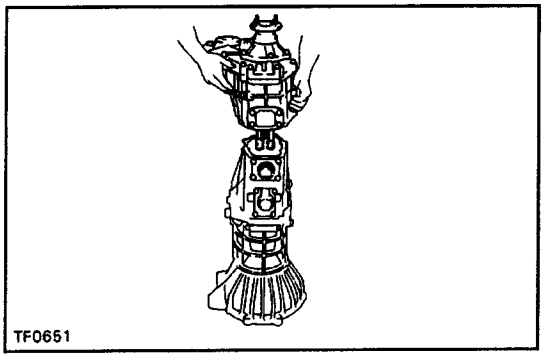

(c) Pull the transfer straight up and remove it from the transmission.

HINT: Take care not to damage the adaptor rear oil seal with the transfer input gear spline.

TRANSMISSION INSTALLATION

1. INSTALL TRANSFER AND PROPELLER SHAFT UPPER DUST COVER TO TRANSMISSION WITH NEW GASKET

(a) Shift the 2 shift fork shafts to the high–4 position.

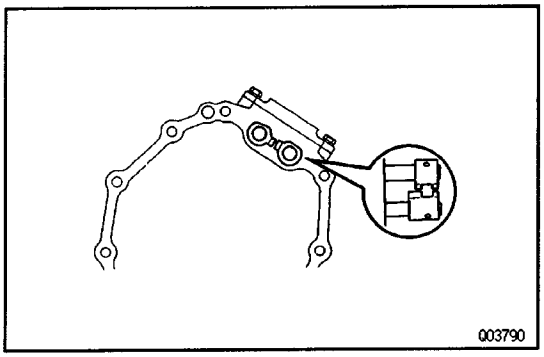

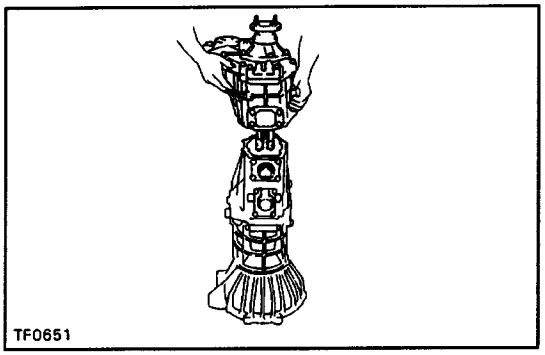

(b) Apply MP grease to the adaptor oil seal.

(c) Place a new gasket to the transfer adaptor.

(d) Install the transfer to the transmission.

HINT: Take care not to damage the oil seal by the input gear spline when installing the transfer.

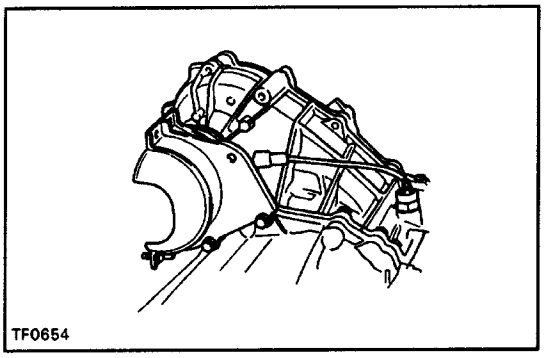

(e) Install and torque the bolts with the propeller shaft upper dust cover.

Torque: 37 N–m (380 kgf–cm, 27 ft–lbf)

(f) Install the dust cover bolt to the bracket.

Torque: 23 N–m (230 kgf–cm, 17 ft–lbf)

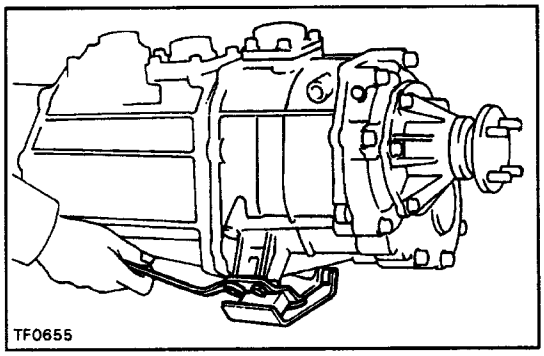

2. INSTALL ENGINE REAR MOUNTING

Install the engine rear mounting and torque the 4 bolts.

Torque: 25 N–m (260 kgf–cm, 19 ft–lbf)

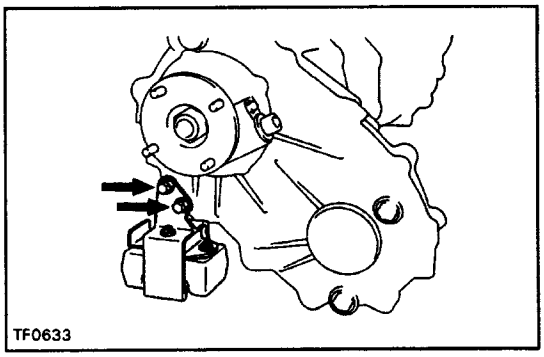

3. Regular Cab w/Planetary Gear Type Transfer: INSTALL DYNAMIC DAMPER

Torque: 37 N–m (380 kgf–cm, 27 ft–lbf)

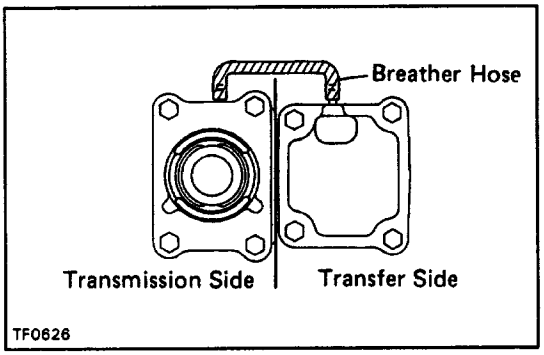

4. INSTALL BREATHER HOSE

Connect the breather hose for the transfer upper cover and transmission control retainer, as shown.

Hose depth:

13 mm (0.51 in.)

5. PLACE TRANSMISSION WITH TRANSFER AT INSTALLATION POSITION

(a) Support the transmission with a jack.

(b) Align the input shaft spline with the clutch disc, and push the transmission with the transfer fully into position.

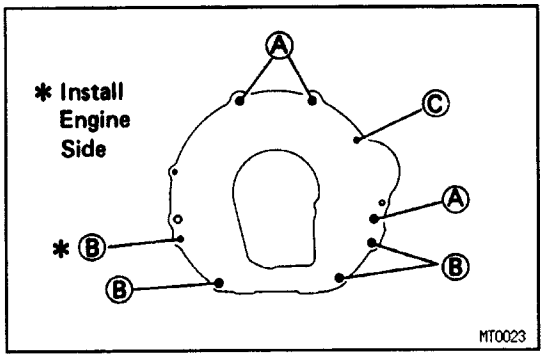

6. INSTALL TRANSMISSION AND STIFFENER BOLTS

Torque:

(A) Transmission bolt:

72 N–m (730 kgf–cm, 53 ft–lbf)

(B) Stiffener plate bolt:

37 N–m (380 kgf–cm, 27 ft–lbf)

(C) Starter bolt:

39 N–m (400 kgf–cm, 29 ft–lbf)

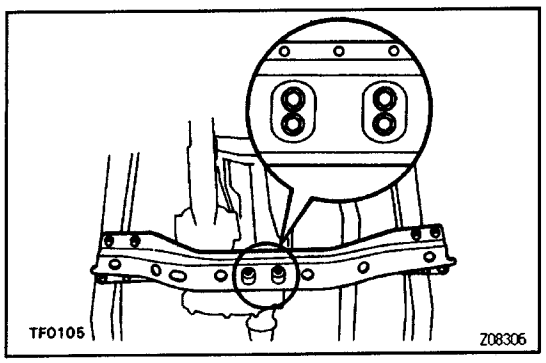

7. INSTALL NO. 2 FRAME CROSSMEMBER

(a) Raise the transmission slightly with a jack.

(b) Install the No. 2 frame crossmember to the side frame and torque the 8 bolts.

Torque: 95 N–m (970 kgf–cm, 70 ft–lbf)

(c) Lower the transmission and transfer.

(d) Install the 4 mounting bolts to the engine rear mounting. Torque the bolts.

Torque: 13 N–m (130 kgf–cm, 9 ft–lbf)

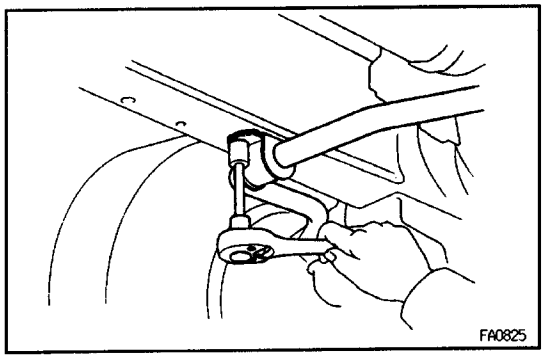

8. INSTALL STABILIZER BAR BRACKET SET BOLTS

Install and torque the 4 bolts.

Torque: 29 N–m (300 kgf–cm, 22 ft–lbf)

9. REMOVE PIECE OF WOOD FROM FRONT AXLE AND ENGINE OIL PAN

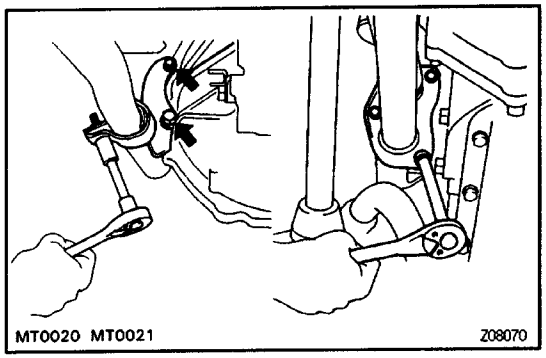

10. INSTALL EXHAUST PIPE, BRACKET AND CLAMP

(a) Install 2 new gaskets and the exhaust pipe to the manifold. Torque 3 new nuts.

Torque: 62 N–m (630 kgf–cm, 46 ft–lbf)

(b) Install the pipe bracket to the clutch housing and torque the 2 bolts.

Torque:

Upper bolt: 19 N–m (195 kgf–cm, 14 ft–lbf)

Lower bolt: 69 N–m (700 kgf–cm, 51 ft–lbf)

(c) Install the exhaust pipe clamp.

Torque: 19 N–m (195 kgf–cm, 14 ft–lbf)

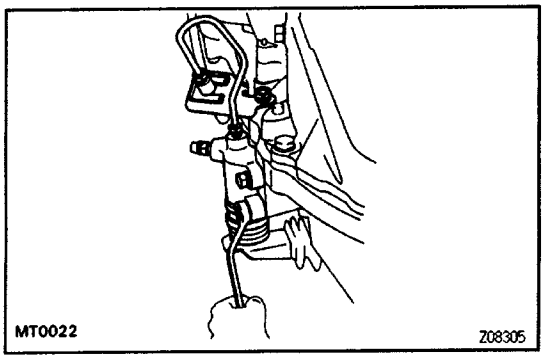

11. INSTALL STARTER MOUNTING BOLTS, CLUTCH RELEASE CYLINDER AND LINE BRACKET

(a) Install the line bracket and torque the starter lower mounting bolt and nut.

Torque: 39 N–m (400 kgf–cm, 29 ft–lbf)

(b) Install the clutch release cylinder and torque the 2 bolts.

Torque: 12 N–m (120 kgf–cm, 9 ft–lbf)

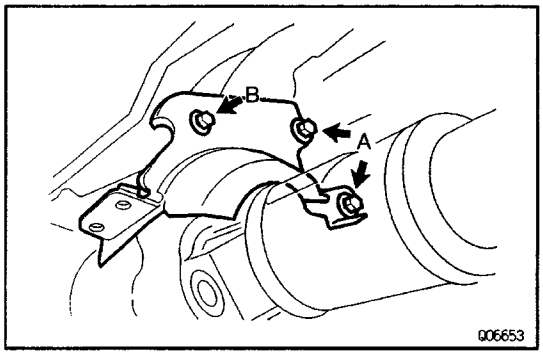

12. INSTALL PROPELLER SHAFT DUST COVER SUB–ASSEMBLY

(a) Install the cover.

(b) Install and torque the 3 bolts.

Torque:

Bolt A: 36 N–m (370 kgf–cm, 27 ft–lbf)

Bolt B: 23 N–m (230 kgf–cm, 17 ft–lbf)

13. CONNECT VEHICLE SPEED SENSOR, BACK – UP LIGHT SWITCH CONNECTOR AND TRANSFER INDICATOR SWITCH CONNECTOR

14. CONNECT FRONT AND REAR PROPELLER SHAFT (See page PR–16)

15. FILL TRANSMISSION WITH GEAR OIL

Oil grade:

API GL–3, GL–4 or GL–5

Viscosity:

SAE 75W–90

Capacity:

3.9 liters (4.1 US qts, 3.4 Imp. qts)

16. LOWER VEHICLE

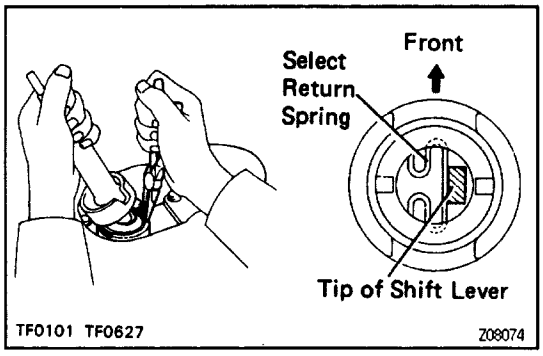

97. INSTALL TRANSFER SHIFT LEVER

(a) Apply MP grease to the transfer shift lever.

(b) Install the shift lever, as shown.

(c) Using pliers, install the snap ring.

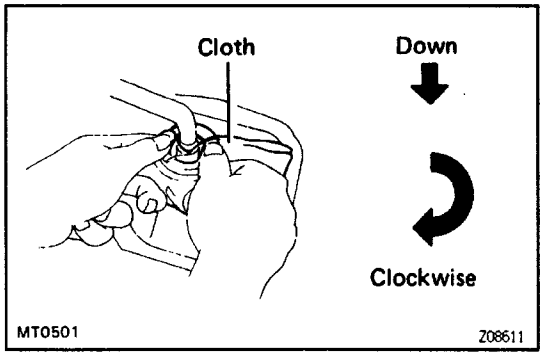

18. INSTALL TRANSMISSION SHIFT LEVER

(a) Apply MP grease to the transmission shift lever.

(b) Align the groove of the shift lever cap and the pin part of the case cover.

(c) Cover the shift lever cap with a cloth.

(d) Then, pressing down on the shift lever cap, rotate it clockwise to install.

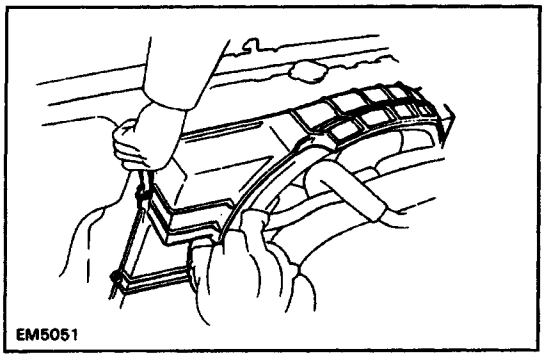

19. INSTALL FAN SHROUD SET BOLTS

Install and torque the 4 bolts.

20. CONNECT NEGATIVE (–) TERMINAL CABLE TO BATTERY

21. PERFORM ROAD TEST

Check for abnormal noises and smooth shifting.

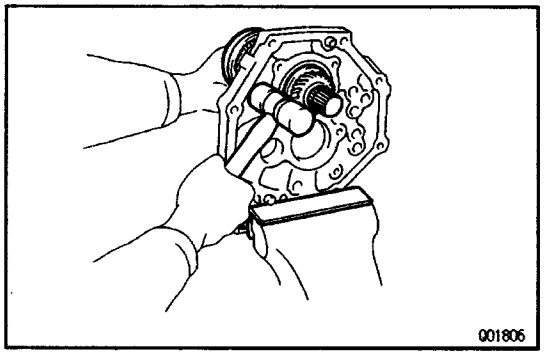

COMPONENT PARTS INSTALLATION

BASIC SUBASSEMBLY REASSEMBLY

(See pages MT1–16 to MT1–18)

HINT: Coat all of the sliding and rotating surfaces with gear oil before assembly.

1. INSTALL OUTPUT SHAFT TO INTERMEDIATE PLATE

(a) Install the output shaft into the intermediate plate by pulling on the output shaft and tapping on the intermediate plate.

(b) Using a snap ring expander, install the output shaft center bearing snap ring.

HINT: Be sure the snap ring is flush with the intermediate plate surface.

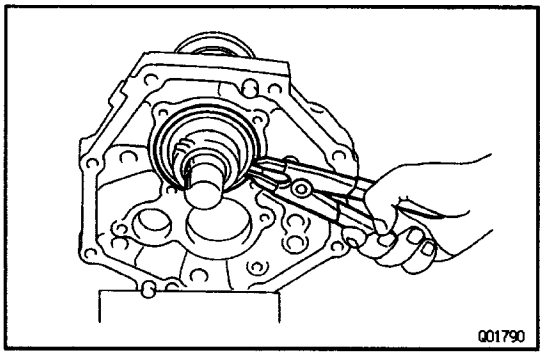

2. INSTALL INPUT SHAFT TO OUTPUT SHAFT

(a) Apply MP grease to the 13–needle roller bearings and install them into the input shaft.

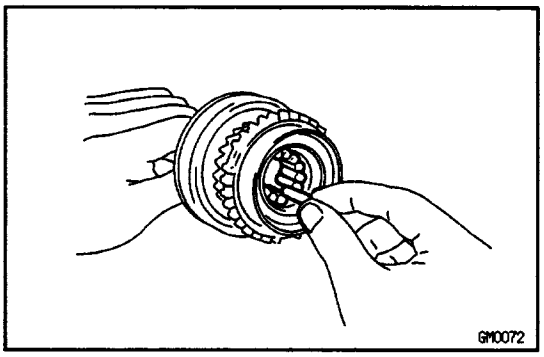

(b) Install the input shaft to the output shaft with the synchronizer ring slots aligned with the shifting keys.

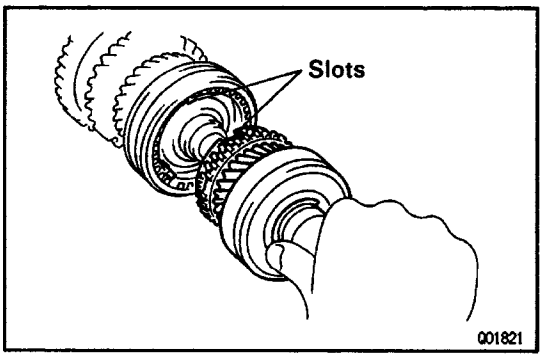

3. INSTALL COUNTER GEAR TO INTERMEDIATE PLATE

(a) Using a snap ring expander, install the snap ring to the counter gear bearing.

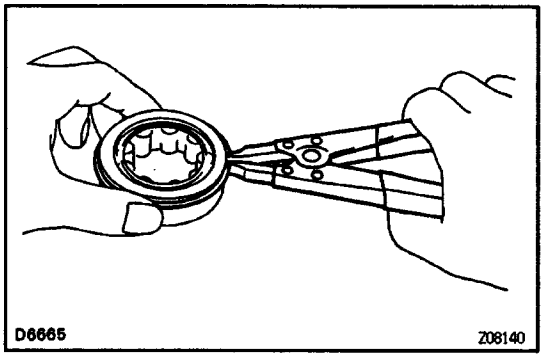

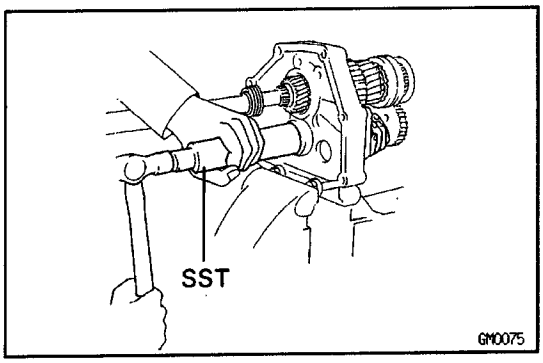

(b) Install the counter gear into the intermediate plate while holding the counter gear and install a new counter rear bearing with SST.
SST 09316–60010 (09316–00010)

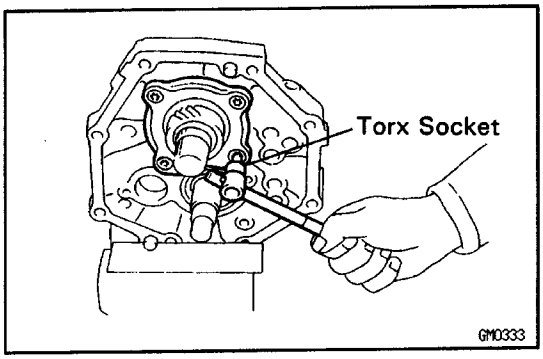

4. INSTALL REAR BEARING RETAINER

Using a torx socket wrench, install and torque the 4 screws.
(Torx socket wrench T40 09042–00020)
Torque: 18 N–m (185 kgf–cm, 13 ft–lbf)

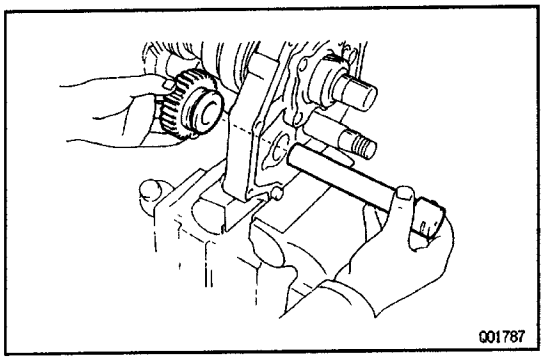

5. INSTALL REVERSE IDLER GEAR AND SHAFT

(a) Install the reverse idler gear and shaft.

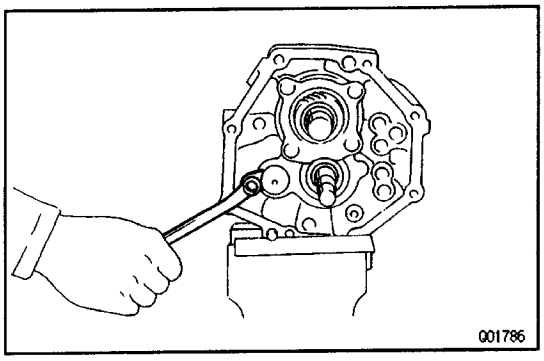

(b) Install the shaft stopper and torque the bolt.
Torque: 17 N–m (175 kgf–cm, 13 ft–lbf)

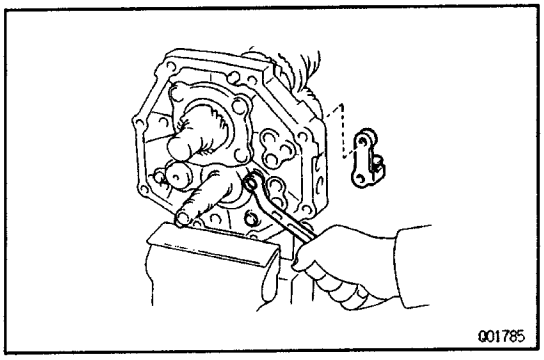

6. INSTALL REVERSE SHIFT ARM BRACKET

Install the reverse shift arm bracket and torque the 2 bolts.
Torque: 18 N–m (185 kgf–cm, 13 ft–lbf)

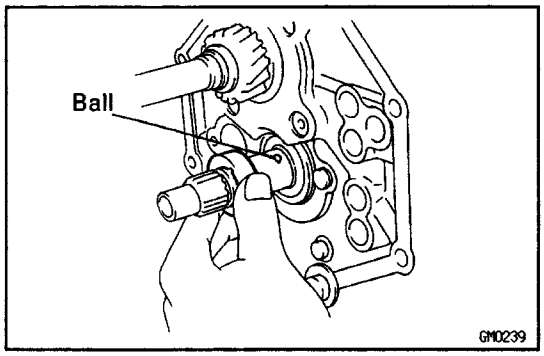

7. INSTALL BALL AND SPACER

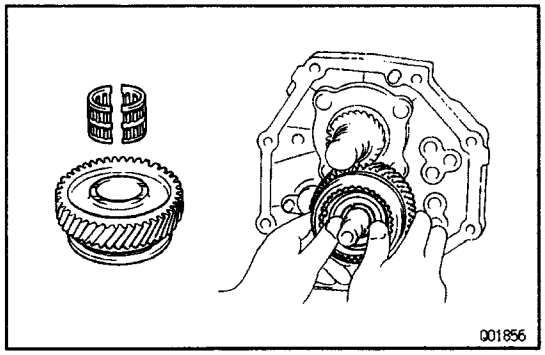

8. INSTALL COUNTER 5TH GEAR WITH HUB SLEEVE NO.3 ASSEMBLY AND NEEDLE ROLLER BEARINGS

(a) Apply gear oil to the needle roller bearings.

(b) Install the counter 5th gear with the hub sleeve No.3 and needle roller bearings.

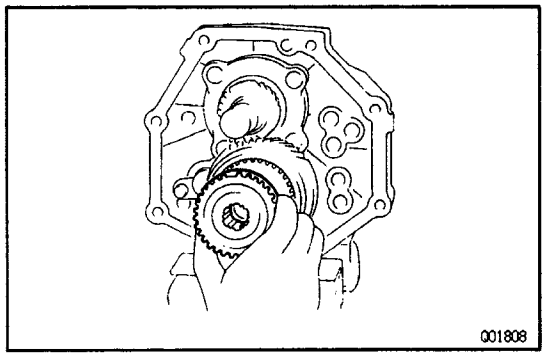

9. INSTALL SYNCHRONIZER RING AND GEAR SPLINE PIECE NO.5.

(a) Install the synchronizer ring on the gear spline piece No.5.

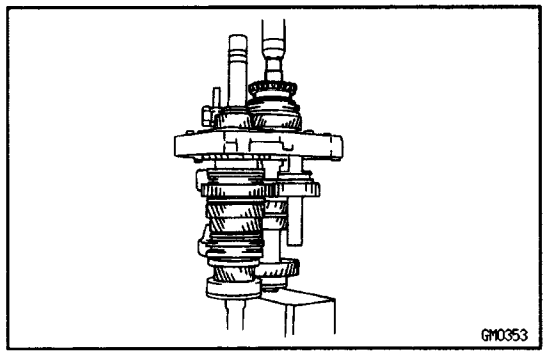

(b) Dismount the intermediate plate from the vise.

(c) Stand the transmission, as shown.

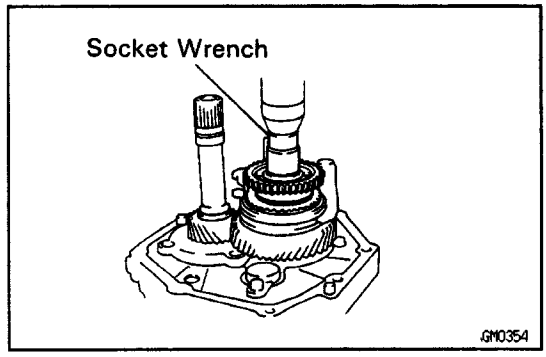

(d) Using a 22 mm socket wrench and press, install the gear spline piece No.5 with the synchronizer ring slots aligned with the shifting keys.

(e) Mount the intermediate plate to the vise.

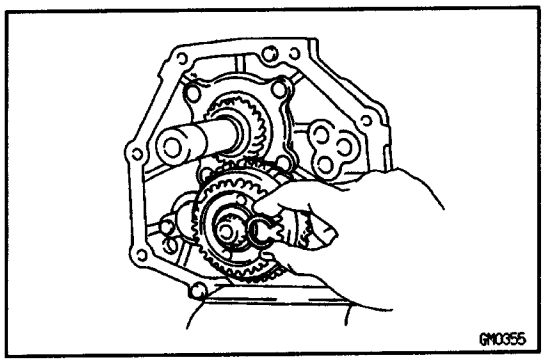

10. INSTALL SNAP RING

(a) Select a snap ring that will allow minimum axial play.

Mark	Thickness mm (in.)
A	2.80–2.85 (0.110–0.112)
B	2.85–2.90 (0.112–0.114)
C	2.90–2.95 (0.114–0.116)
D	2.95–3.00 (0.116–0.118)
E	3.00–3.05 (0.118–0.120)
F	3.05–3.10 (0.120–0.122)
G	3.10–3.15 (0.122–0.124)

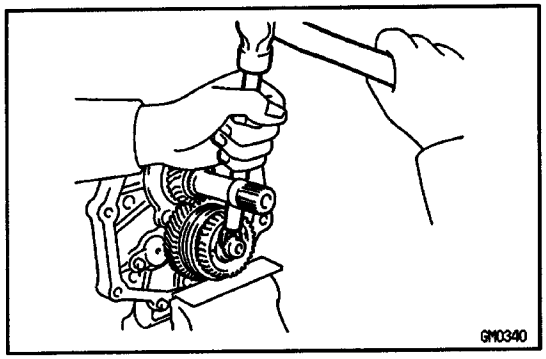

(b) Using a brass bar and hammer, install the snap ring.

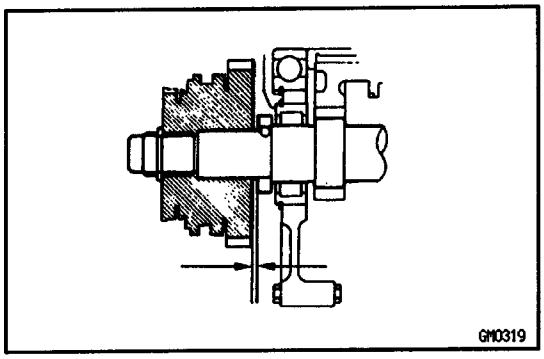

11. INSPECT COUNTER 5TH GEAR THRUST CLEARANCE

Using a feeler gauge, measure the counter 5th gear thrust clearance.

Standard clearance:

0.10 – 0.30 mm (0.0039 – 0.0118 in.)

Maximum clearance:

0.30 mm (0.0118 in.)

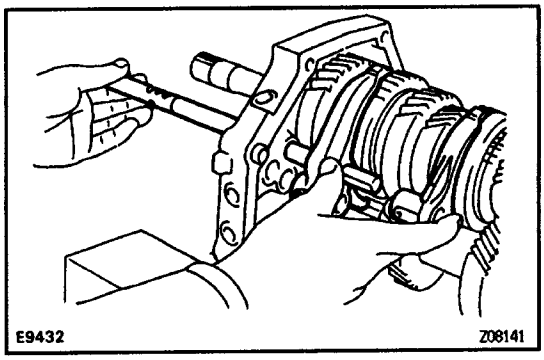

12. INSTALL SHIFT FORK SHAFT NO.2 AND SHIFT FORK NO.2

(a) Install the shift fork No.1 and No–2.

(b) Install the shift fork shaft No.2 through the intermediate plate and shift forks.

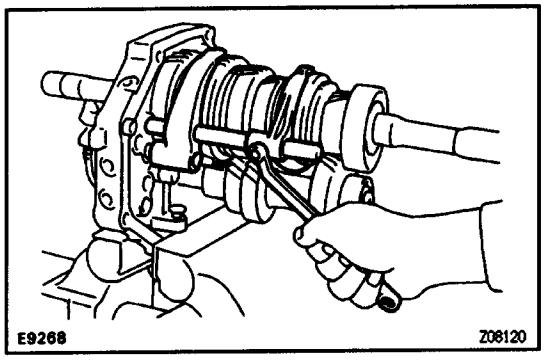

(c) Install the shift fork No.2 with a new bolt and torque the bolt.

Torque: 20 N–m (200 kgf–cm, 14 ft–lbf)

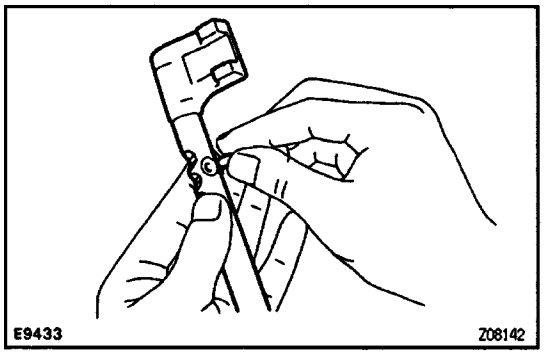

13. INSTALL SHIFT FORK SHAFT NO.1 AND SHIFT FORK NO.1

(a) Apply MP grease to the interlock pin No.2 and install them into the shift fork shaft No.1.

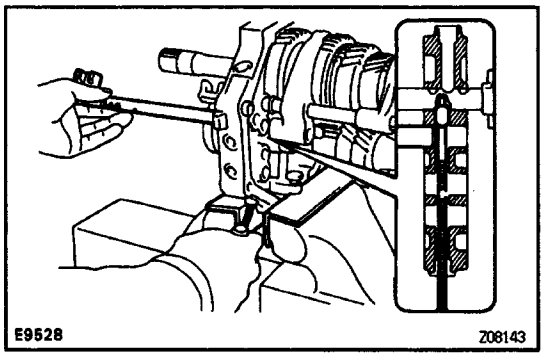

(b) Using a magnetic finger, install the interlock pin No. 1 to the intermediate plate.

(c) Install the shift fork shaft No.1 through the intermediate plate and shift fork No.1.

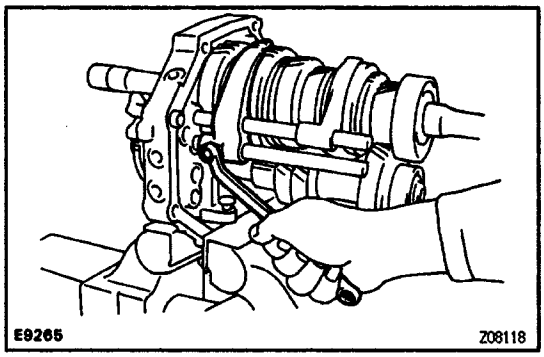

(d) Install the shift fork No.1 with a new bolt and torque the bolt.

Torque: 20 N–m (200 kgf–cm, 14 ft–lbf)

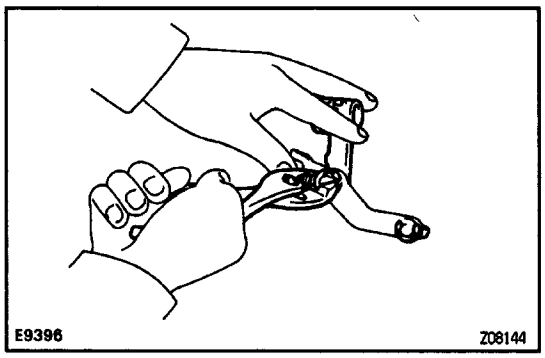

14. INSTALL SHIFT FORK SHAFT NO.3 AND REVERSE SHIFT FORK

(a) Install the shift arm shoe, shift fork and 2 E–rings to the reverse shift arm.

(b) Install the reverse shift arm to the reverse shift arm bracket.

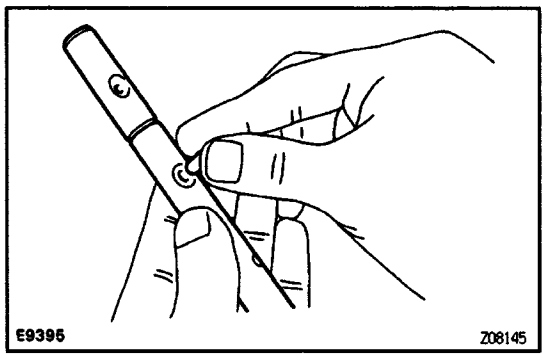

(c) Apply MP grease to the interlock pin No.2 and install them into the shift fork shaft No.3.

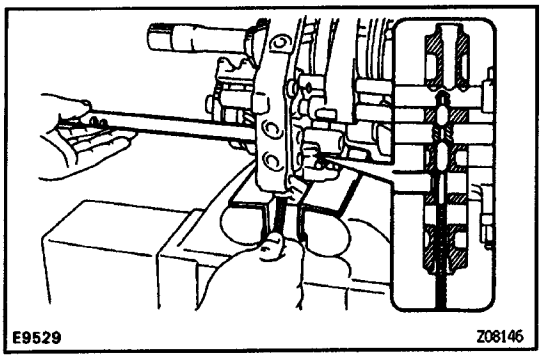

(d) Using a magnetic finger, install the interlock pin No. 1 to the intermediate plate.
(e) Install the shift fork shaft No.3 through the intermediate plate and reverse shift fork.

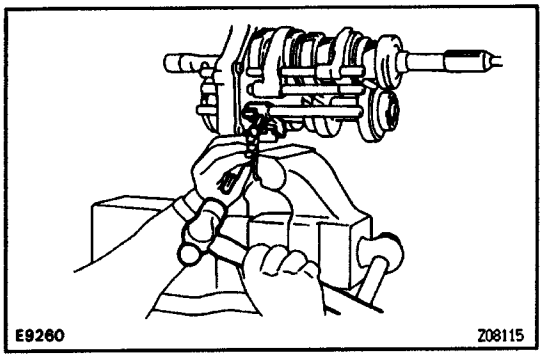

(f) Using a pin punch and hammer, drive in the slotted spring pin.

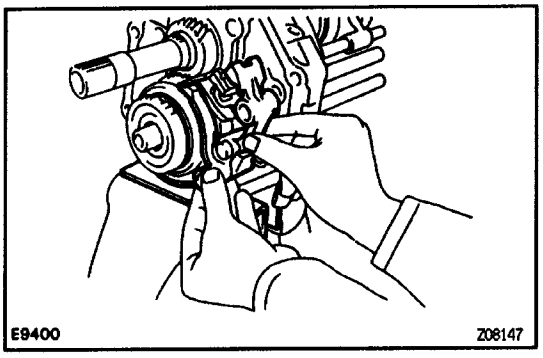

16. INSTALL REVERSE SHIFT HEAD, SHIFT FORK NO.3. SHIFT FORK SHAFT NO.4 AND NO.5

(a) Install the reverse shift head to the shift fork shaft No.3.
(b) Install the shift fork No.3.

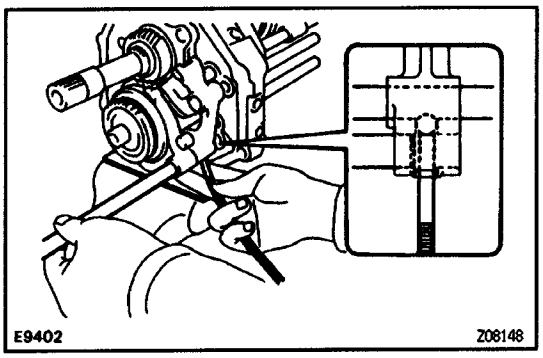

(c) Using a magnetic finger, install the ball to the reverse shift head.
(d) Install the shift fork shaft No.4, as shown.

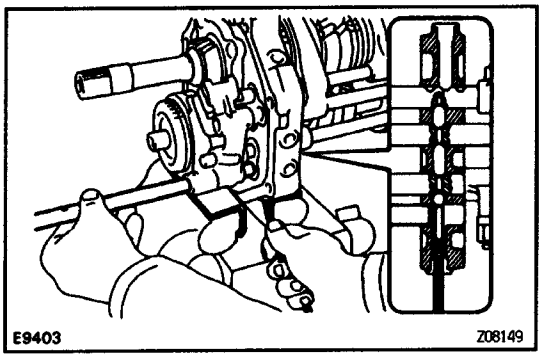

(e) Using a magnetic finger, install the interlock ball No. 1 to the intermediate plate.
(f) Install the shift fork shaft No.4 through the intermediate plate.

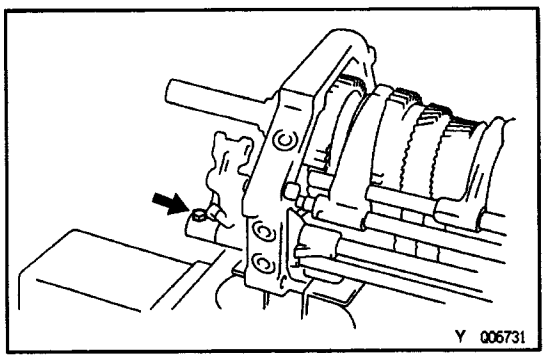

(g) Install the shift fork No.3 with a new bolt and torque the bolt.

Torque: 20 N–m (200 kgf–cm, 14 ft–lbf)

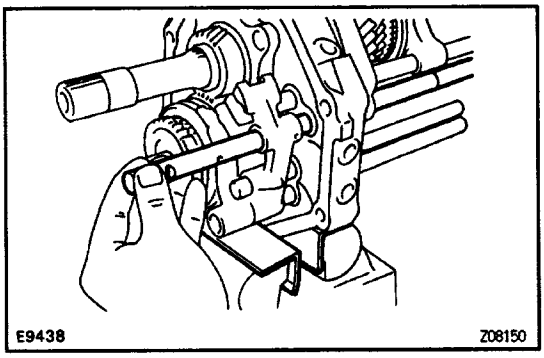

(h) Install the shift fork shaft No.5 through the reverse shift head and intermediate plate.

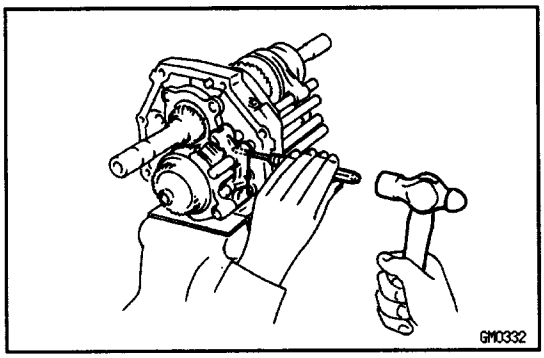

(i) Using a pin punch and hammer, drive in the slotted spring pin to the reverse shift head.

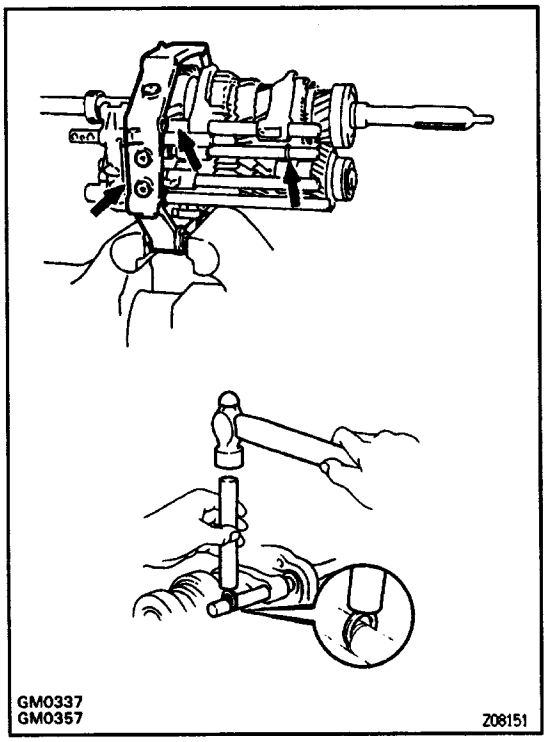

16. INSTALL SHIFT FORK SHAFT SNAP RINGS

Using a brass bar and hammer, drive in the 3 snap rings.

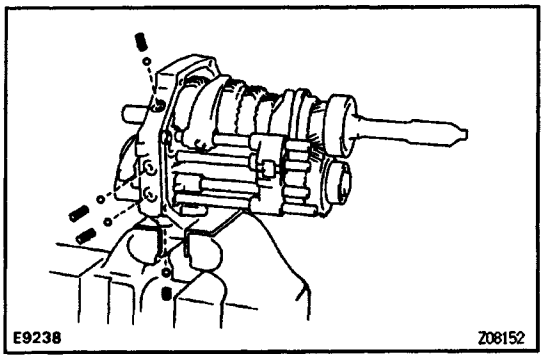

17. INSTALL LOCKING BALLS, SPRINGS AND SCREW PLUGS

(a) Install the 4 locking balls and springs.

HINT: Install the short spring into the bottom of the intermediate plate.

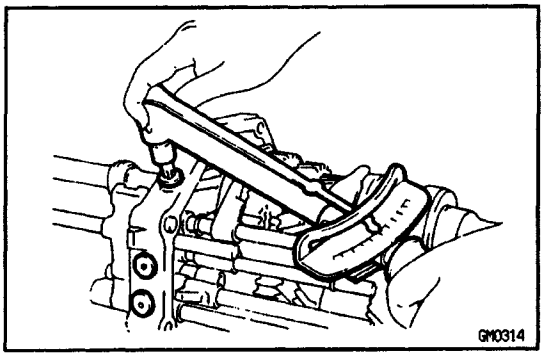

(b) Apply sealant to the plug threads.

Sealant: Part No.08833–00080. THREE BOND 1344 LOCTITE 242 or equivalent

(c) Install the screw plugs and torque the screw plugs with a torx socket wrench.

(Torx socket wrench T40 08042–00020)

Torque: 19 N–m (190 kgf–cm. 14 ft–lbf)

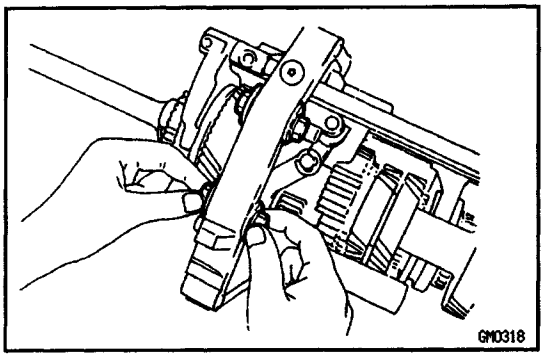

18. DISMOUNT INTERMEDIATE PLATE FROM VISE

(a) Dismount the intermediate plate from the vise.

(b) Remove the bolts, nuts and plate washers.

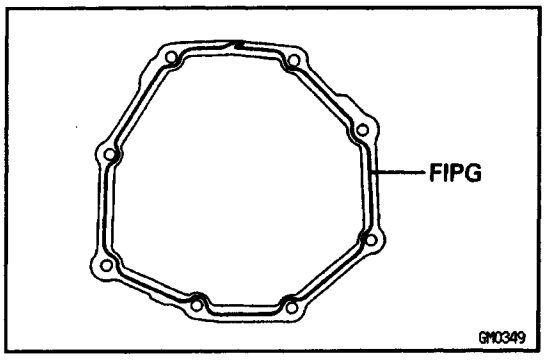

19. INSTALL TRANSMISSION CASE

(a) Remove any FIPG material and be careful not to drop oil on the contacting surfaces of the transmission case or intermediate plate.

(b) Apply FIPG to the transmission case, as shown.

FIPG:

Part No.08826–00090. THREE BOND 1281 or equivalent

HINT: Install the transmission case as soon as FIPG is applied.

(c) Stand the intermediate plate, as shown.

(d) Install the transmission case to the intermediate plate, as shown.

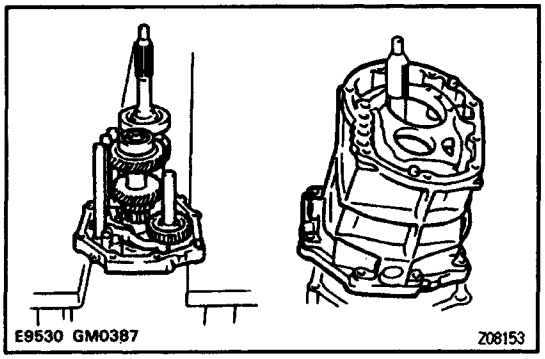

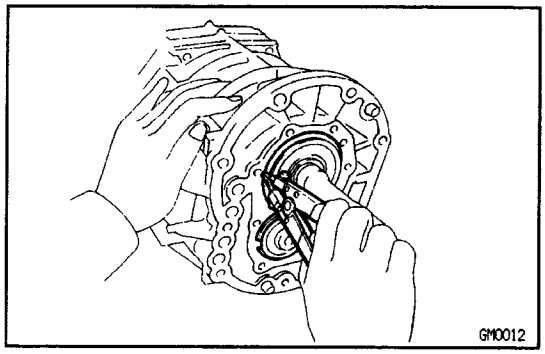

20. INSTALL FRONT BEARING RETAINER

(a) Using a snap ring expander, install the 2 snap rings to the input shaft bearing and counter gear front bearing.

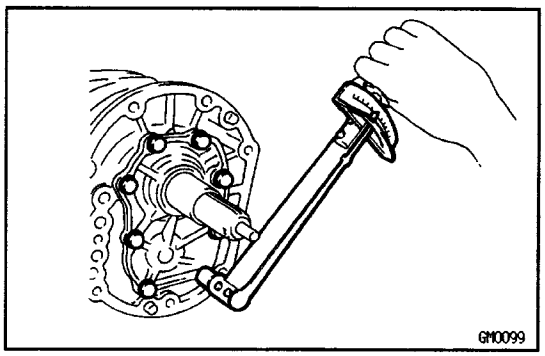

(b) Install the bearing retainer with a new gasket.

(c) Apply sealant to the bolt threads.

Sealant: Part No.08833–00080. THREE BOND 1344 LOCTITE 242 or equivalent

(d) Install and torque the 8 bolts.

Torque: 17 N–m (170 kgf–cm, 12 ft–lbf)

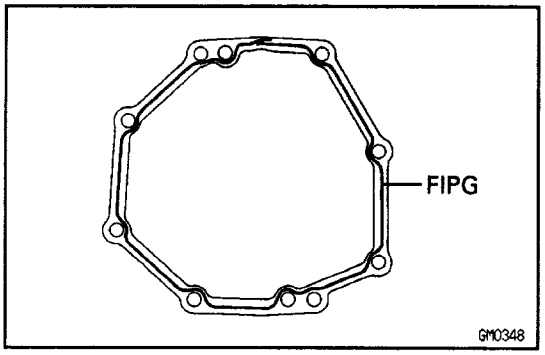

21. INSTALL TRANSFER ADAPTOR, SHIFT LEVER SHAFT AND SHIFT LEVER HOUSING

(a) Remove any FIPG material and be careful not to drop oil on the contacting surfaces of the transfer adaptor or intermediate plate.

(b) Apply FIPG to the transfer adaptor, as shown.

FIPG:

Part No. 088826 – 00090, THREE BOND 1281 or equivalent

HINT: Install the transfer adaptor as soon as FIPG is applied.

(c) Install and torque the transfer adaptor with the 8 bolts.

Torque: 37 N–m (380 kgf–cm, 27 ft–lbf)

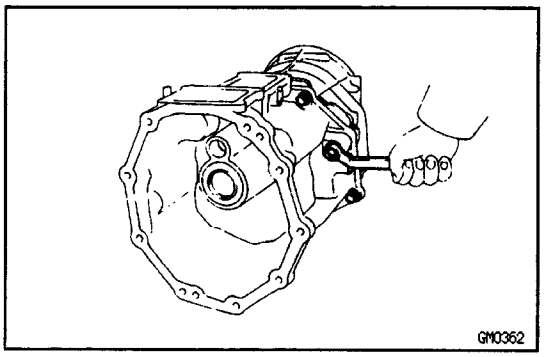

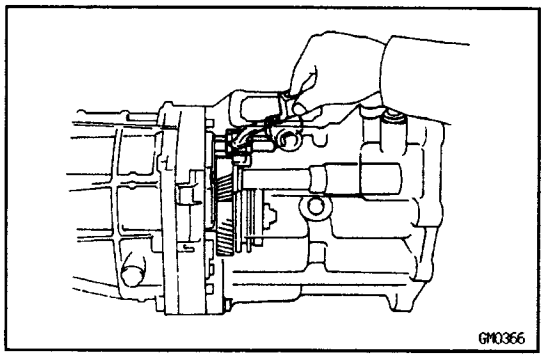

(d) Install the shift lever housing to the transfer adaptor and connect the fork shafts.

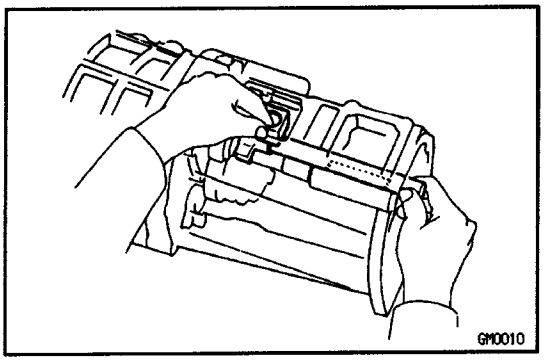

(e) Install the shift lever shaft to the transfer adaptor and shift lever housing.

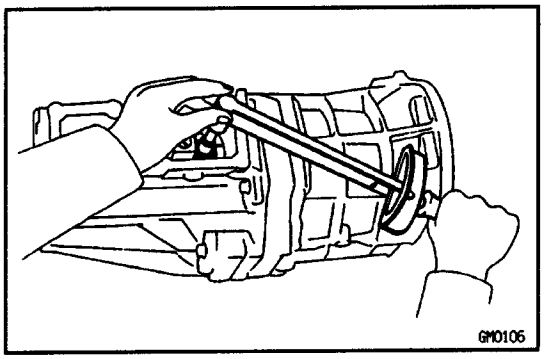

(f) Install and torque the shift lever housing set bolt.
Torque: 38 N–m (390 kgf–cm, 28 ft–lbf)

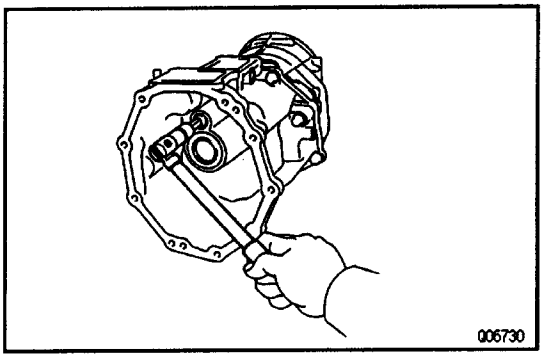

(g) Using a hexagon wrench, install and torque the plug.
Torque: 37 N–m (380 kgf–cm, 27 ft–lbf)

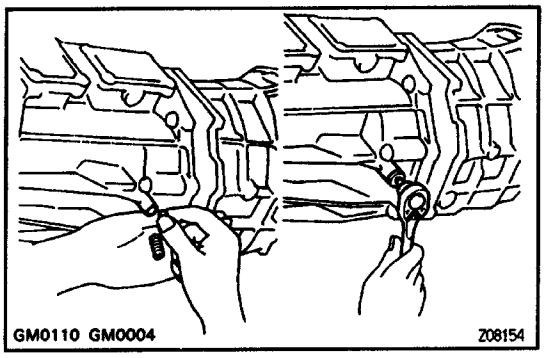

22. INSTALL LOCKING BALL. SPRING AND SCREW PLUG

(a) Apply sealant to the plug threads.
Sealant: Part No.08833–00080, THREE BOND 1344, LOCTITE 242 or equivalent

(b) Install the locking ball, spring and plug, and torque the plug.
(Torx socket wrench T40 09042–00020)
Torque: 19 N–m (190 kgf–cm, 14 ft–lbf)

23. AFTER INSTALLING TRANSFER ADAPTOR CHECK FOLLOWING ITEMS

(a) Check to see that the input and output shafts rotate smoothly.

(b) Check to see that shifting can be made smoothly to all positions.

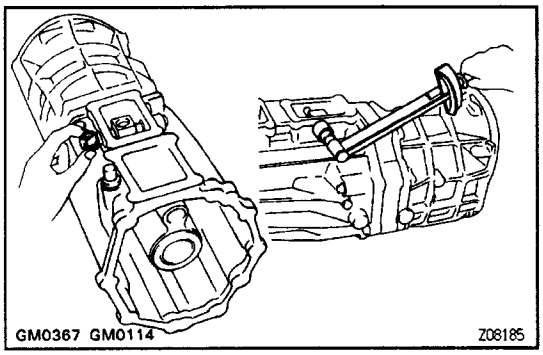

24. INSTALL RESTRICT PINS

(a) Install the black pin on the reverse gear/5th gear side.

(b) Install another pin and torque the pins.

Torque: 27 N–m (280 kgf–cm, 20 ft–lbf)

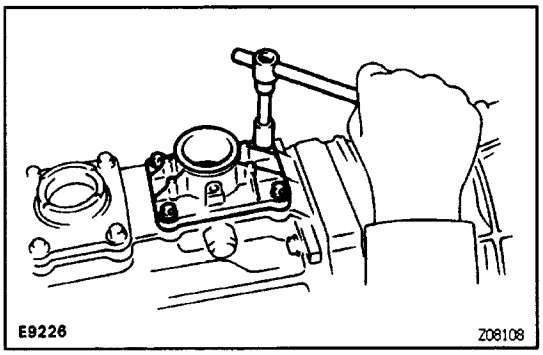

25. INSTALL TRANSMISSION SHIFT LEVER CONTROL RETAINER

(a) Install the shift lever control retainer and a new gasket.

(b) Install the 4 bolts and torque the bolts.

Torque: 18 N–m (185 kgf–cm, 13 ft–lbf)

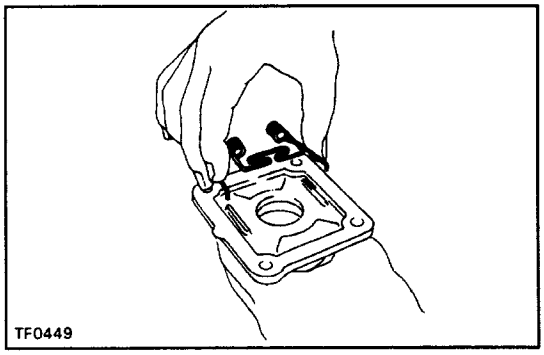

26. INSTALL TRANSFER SHIFT LEVER CONTROL RETAINER

(a) Install the select return spring from the retainer.

(b) Install the shift lever control retainer and a new gasket.

(c) Install the 4 bolts and torque the bolts.

Torque: 18 N–m (185 kgf–cm, 13 ft–lbf)

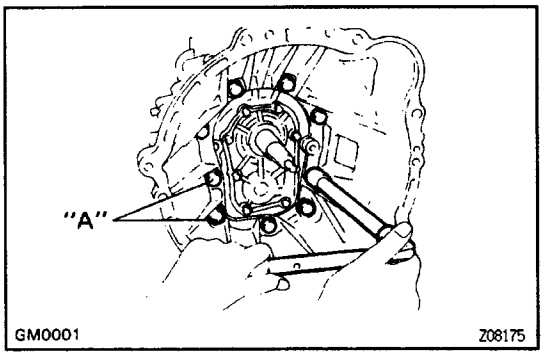

27. INSTALL CLUTCH HOUSING

(a) Install the clutch housing.

(b) Apply sealant to the "A" bolt threads.

Sealant: Part No.08833–00080, THREE BOND 1344, LOCTITE 242 or equivalent

(c) Install the 9 bolts and torque the bolts.

Torque: 37 N–m (380 kgf–cm, 27 ft–lbf)

28. INSTALL BACK – UP LIGHT SWITCH WITH GASKET

Torque: 37 N–m (380 kgf–cm, 27 ft–lbf)

29. INSTALL RELEASE FORK AND BEARING

Apply molybdenum disulphide lithium base grease (See page CL–18).

COMPONENT PARTS REMOVAL

COMPONENTS

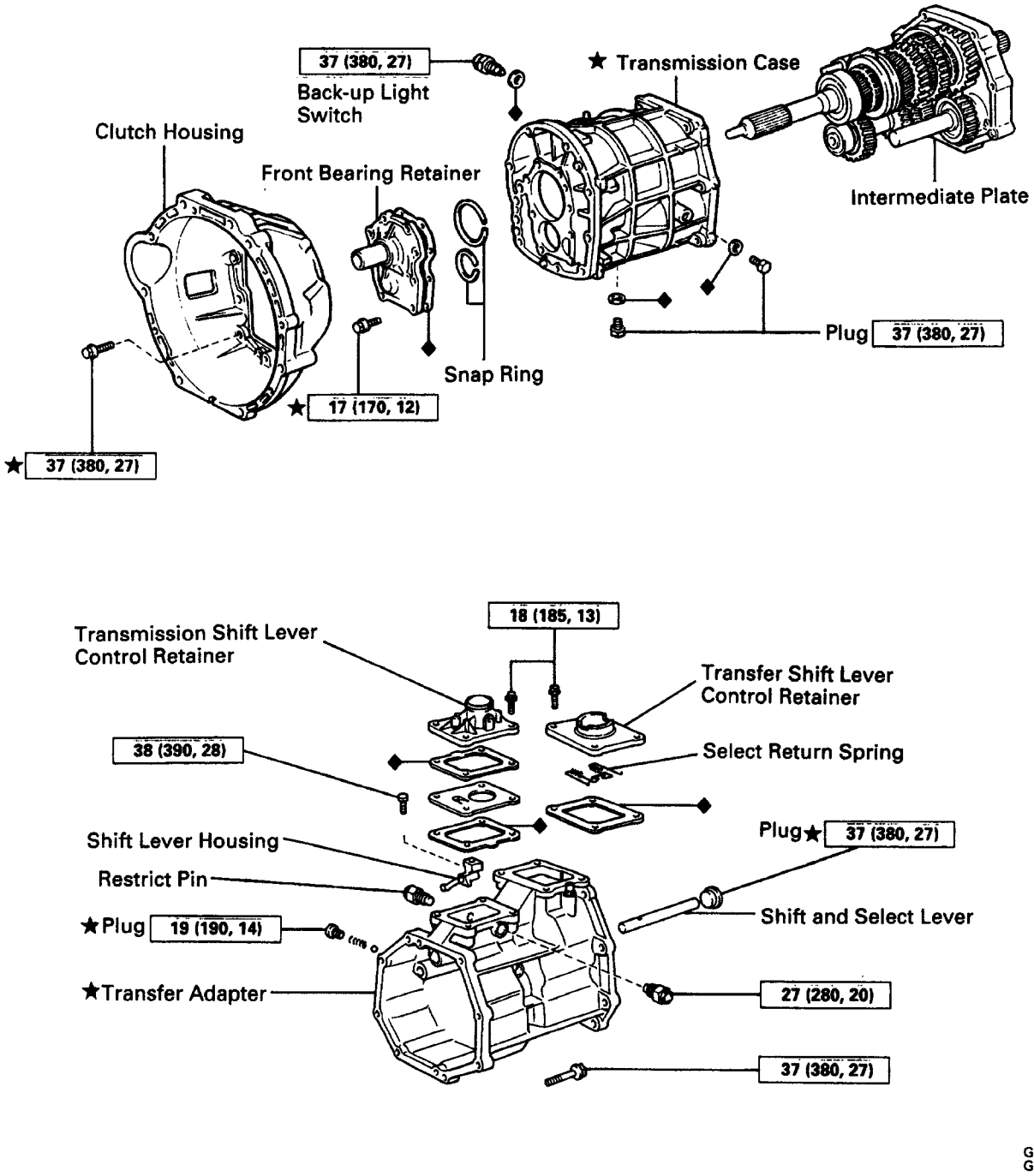

N·m (kgf·cm, ft·lbf) : Specified torque
◆ Non-reusable part
★ Precoated part

Z08104

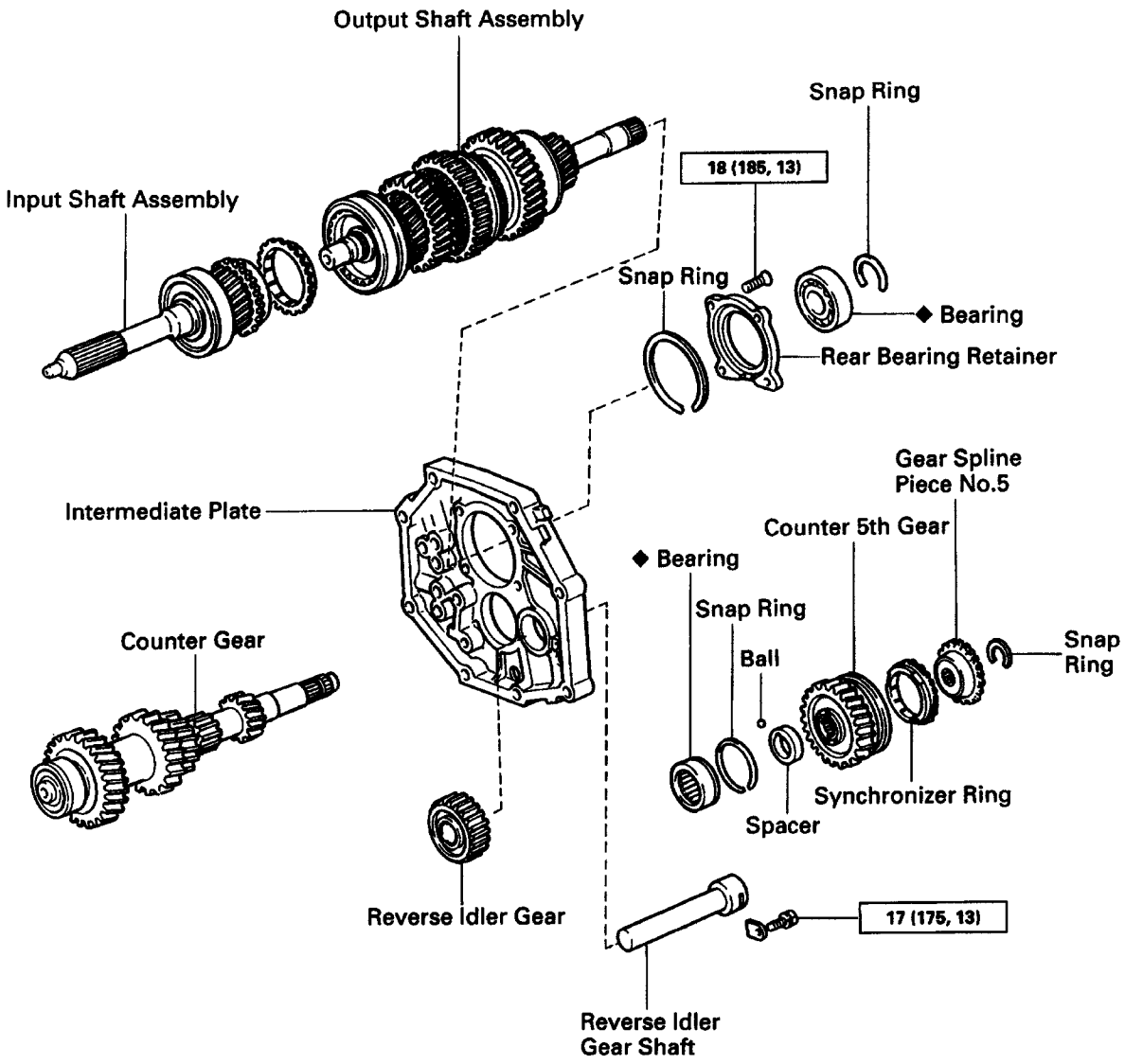

N·m (kgf·cm, ft·lbf) : Specified torque
◆ Non-reusable part

Z14377

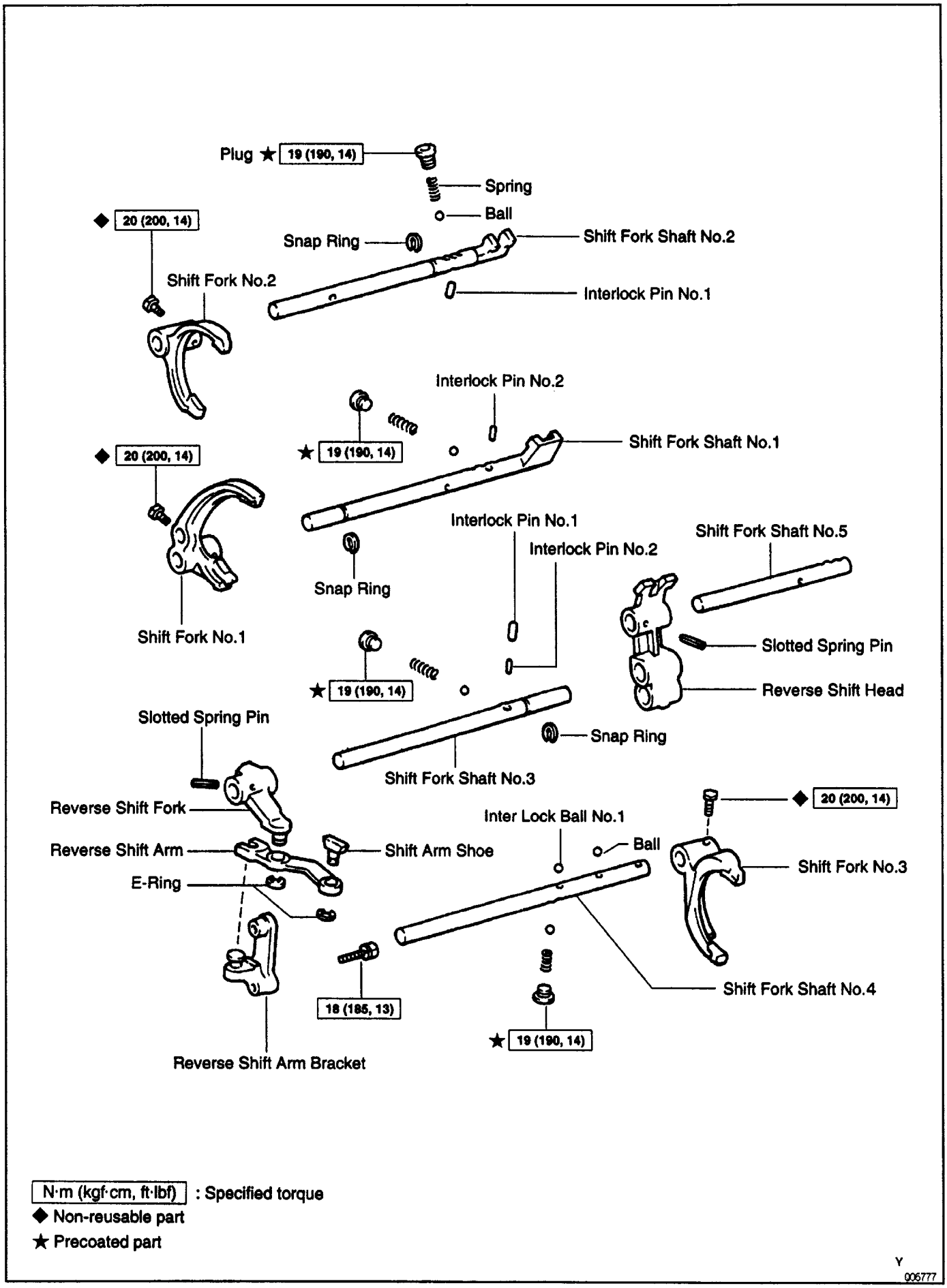

N·m (kgf·cm, ft·lbf) : Specified torque
◆ Non-reusable part
★ Precoated part

Y
006777

BASIC SUBASSEMBLY SEPARATION

(See pages MT1–16 to MT1–18)

1. REMOVE RELEASE FORK AND BEARING

2. REMOVE BACK – UP LIGHT SWITCH WITH GASKET

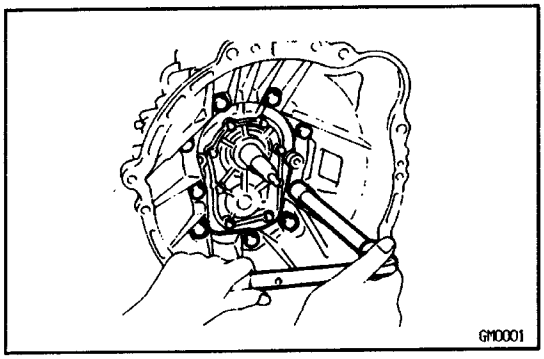

3. REMOVE CLUTCH HOUSING FROM TRANSMISSION CASE

Remove the 9 bolts and clutch housing.

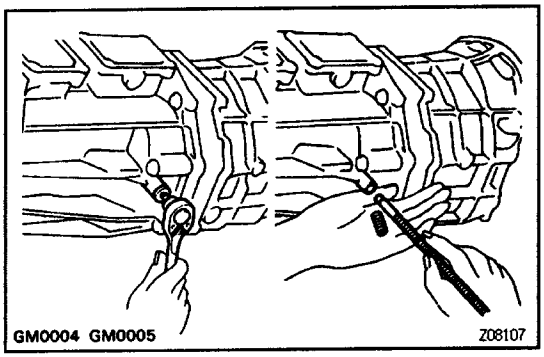

4. REMOVE STRAIGHT SCREW PLUG. SPRING AND BALL

(a) Using a torx socket wrench, remove the screw plug from the transfer adaptor.
(Torx socket wrench T40 09042–00020)

(b) Using a magnetic finger, remove the spring and ball.

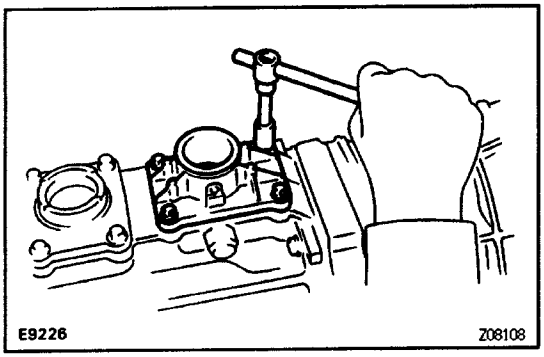

5. REMOVE TRANSMISSION AND TRANSFER SHIFT LEVER CONTROL RETAINER

(a) Remove the 4 bolts and transmission shift lever control retainer with the gasket.

(b) Remove the 4 bolts, transfer shift lever control retainer and select return spring with the gasket.

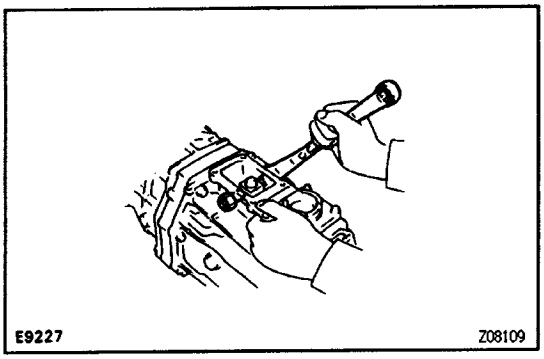

6. REMOVE 2 RESTRICT PINS

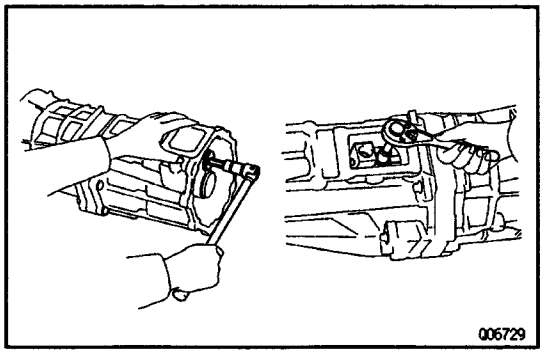

7. REMOVE TRANSFER ADAPTOR

(a) Using a hexagon wrench, remove the plug from the transfer adaptor.

(b) Remove the shift lever housing set bolt.

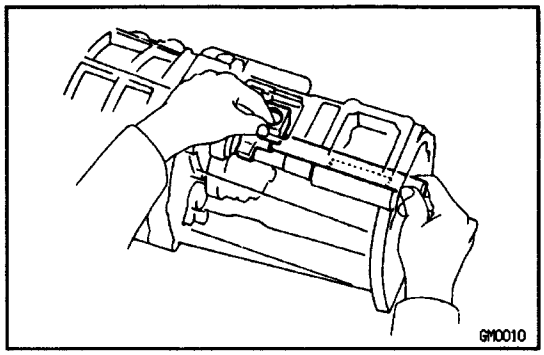

(c) Remove the shift and select lever and shift lever housing.

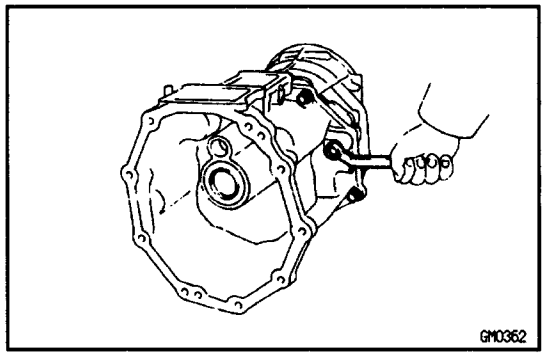

(d) Remove the 8 bolts.

(e) Using a plastic hammer, carefully tap the transfer adaptor.

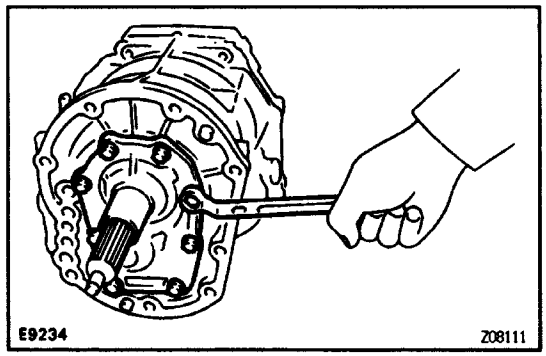

8. REMOVE FRONT BEARING RETAINER

Remove the 8 bolts, front bearing retainer and gasket.

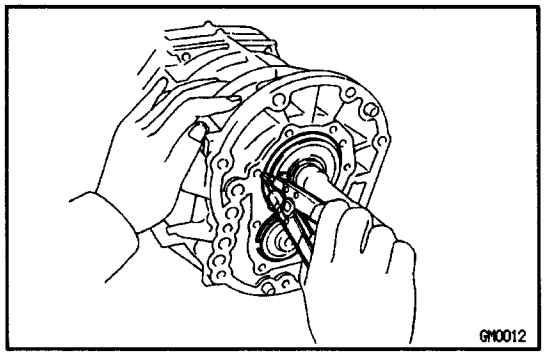

9. REMOVE BEARING SNAP RINGS

Using a snap ring expander, remove the 2 snap rings.

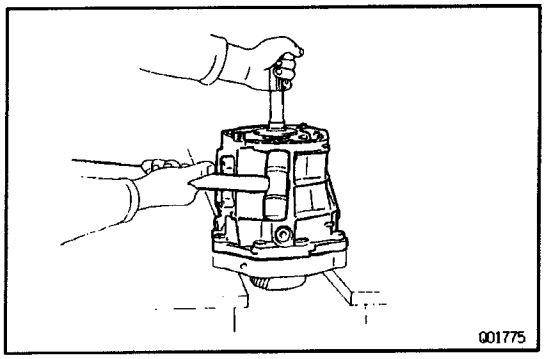

10. SEPARATE INTERMEDIATE PLATE FROM TRANSMISSION CASE

(a) Stand the transmission, as shown.

(b) Using a plastic hammer, carefully tap the transmission case.

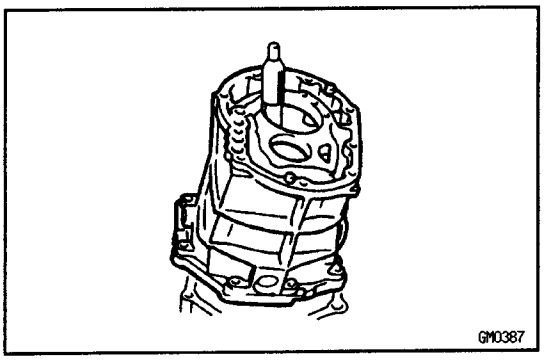

(c) Remove the transmission case from the intermediate plate, as shown.

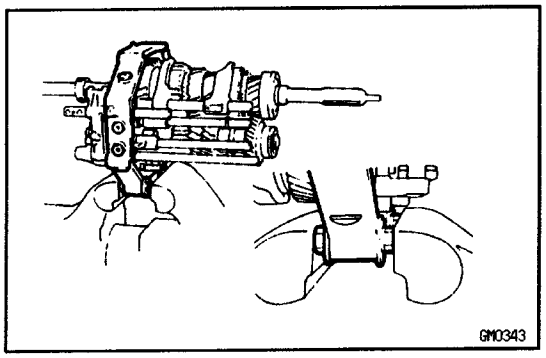

11. MOUNT INTERMEDIATE PLATE IN VISE

(a) Use the 2 long clutch housing bolts, plate washers and suitable nuts, as shown.

NOTICE: Increase or decrease plate washers so that the bolt tip does not stand proud of the nut.

(b) Mount the intermediate plate in a vise.

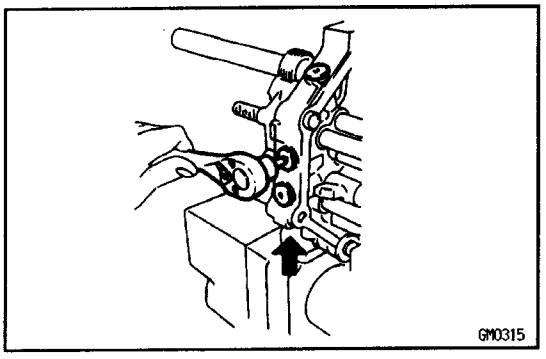

12. REMOVE STRAIGHT SCREW PLUGS, LOCKING BALLS AND SPRINGS

(a) Using a torx socket wrench, remove the 3 screw plugs. (Torx socket wrench T40 09042–00020)

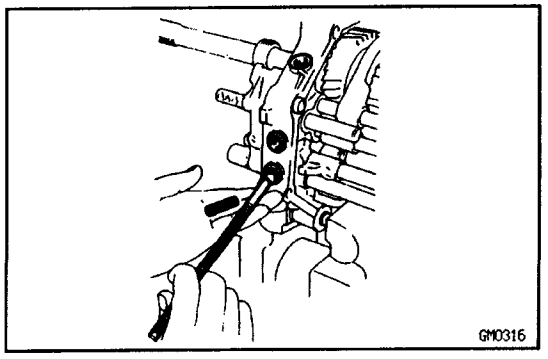

(b) Using a magnetic finger, remove the 3 springs and balls.

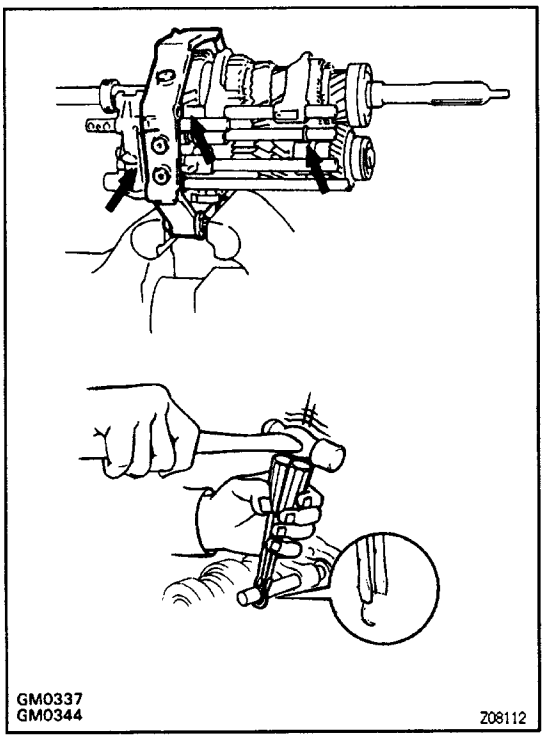

13. REMOVE SHIFT FORK SHAFT SNAP RINGS

Using 2 screwdrivers and a hammer, drive out the 3 snap rings.

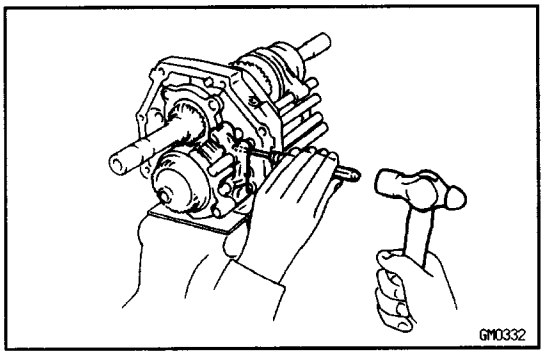

14. REMOVE SHIFT FORK SHAFT NO.5

(a) Using a pin punch and hammer, drive out the slotted spring pin.

(b) Remove the shift fork shaft No.5.

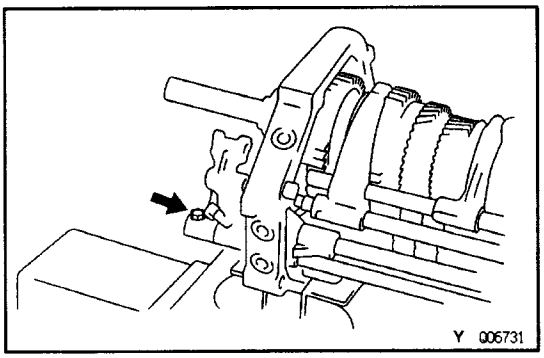

15. REMOVE SHIFT FORK NO.3, SHIFT FORK SHAFT NO.4 AND REVERSE SHIFT HEAD

(a) Remove the shift fork No.3 set bolt.

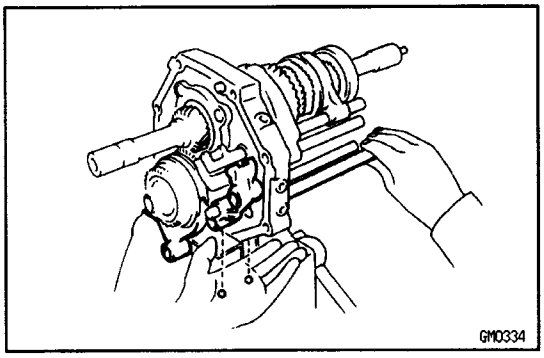

(b) Remove the shift fork No.3, shift fork shaft No.4, reverse shift head and 2 balls.

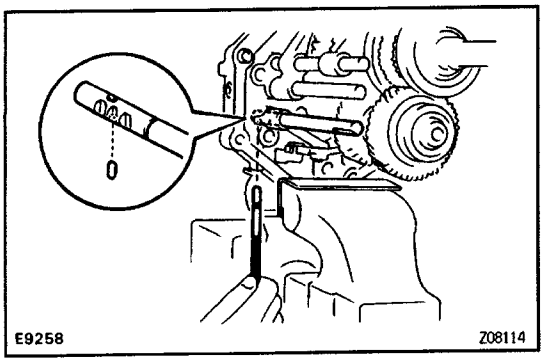

16. REMOVE REVERSE SHIFT ARM, REVERSE SHIFT FORK AND SHIFT FORK SHAFT NO.3

(a) Using a magnetic finger, remove the interlock pin from the shift fork shaft No.3.

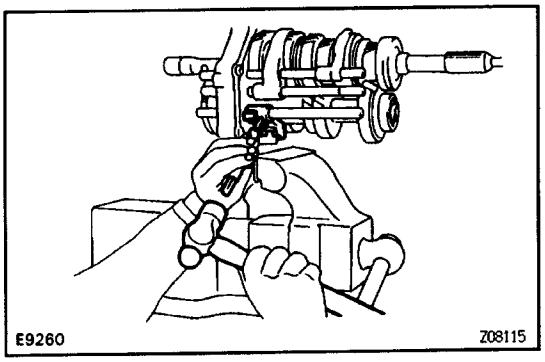

(b) Using a pin punch and hammer, drive out the slotted spring pin.

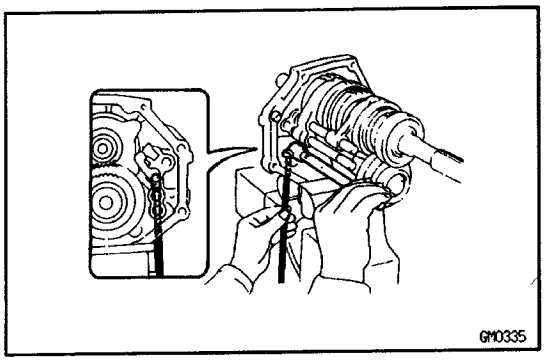

(c) Remove the shift fork shaft No.3.
(d) Remove the interlock pin No.1.

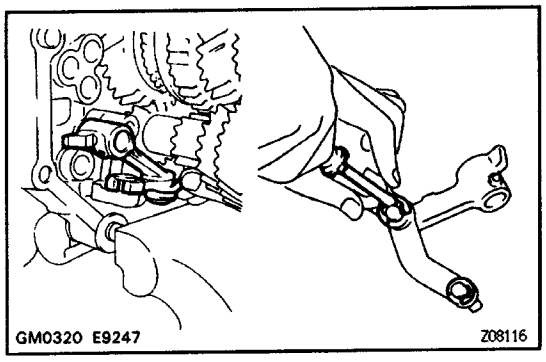

(e) Remove the reverse shift arm and fork.
(f) Using a screwdriver, remove the 2 E–rings.
(g) Separate the shift arm, fork and shoe.

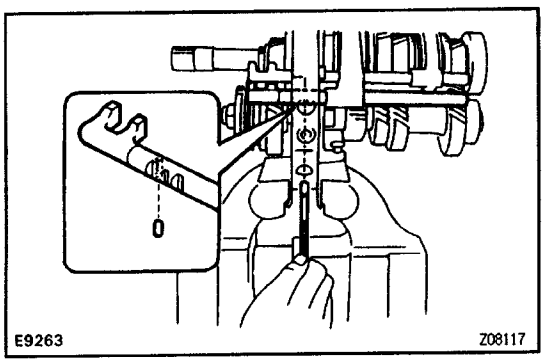

17. REMOVE SHIFT FORK SHAFT NO. 1, NO. 2 AND SHIFT FORK NO.1, NO.2

(a) Using a magnetic finger, remove the interlock pin No.2 from the shift fork shaft No.2.

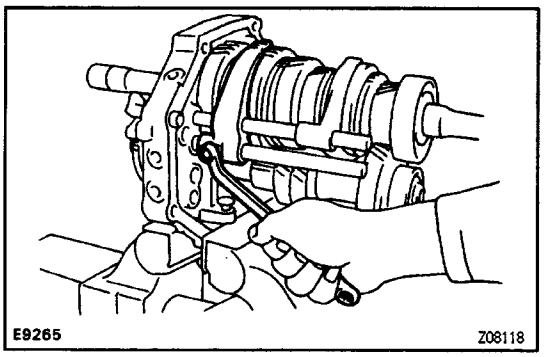

(b) Remove the shift fork No.1 set bolt.

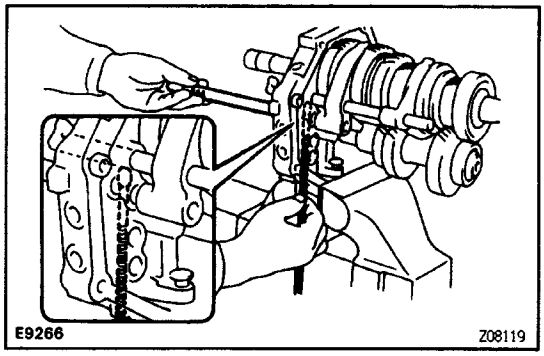

(c) Remove the shift fork shaft No.1.
(d) Remove the interlock pin No.1.

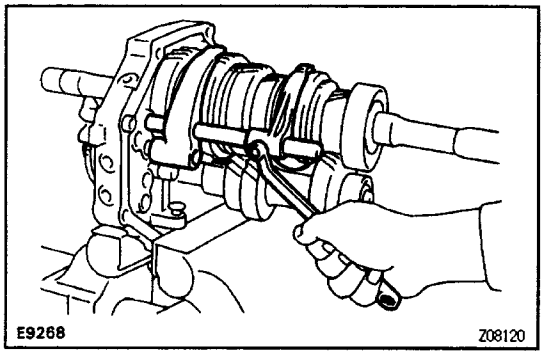

(e) Remove the shift fork No.2 set bolt.
(f) Remove the shift fork No.1, No.2 and shift fork shaft No.2.

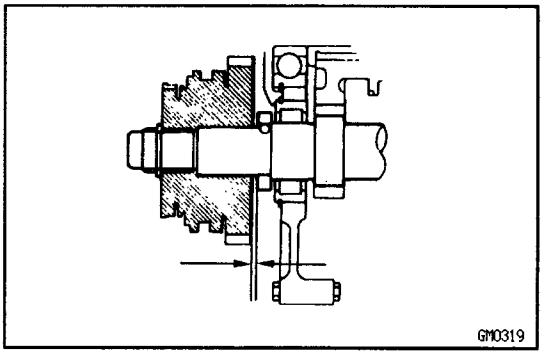

18. INSPECT COUNTER 5TH GEAR THRUST CLEARANCE

Using a feeler gauge, measure the counter 5th gear thrust clearance.

Standard clearance:
0.10–0.30 mm (0.0038–0.0118 in.)
Maximum clearance:
0.30 mm (0.0118 in.)

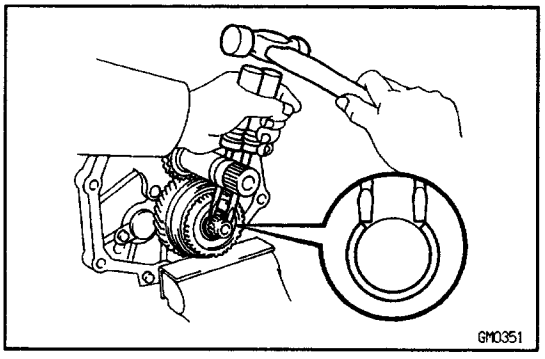

19. REMOVE GEAR SPLINE PIECE NO.5, SYNCHRONIZER RING, NEEDLE ROLLER BEARINGS AND COUNTER 5TH GEAR WITH HUB SLEEVE NO.3

(a) Using 2 screwdrivers and a hammer, tap out the snap ring.

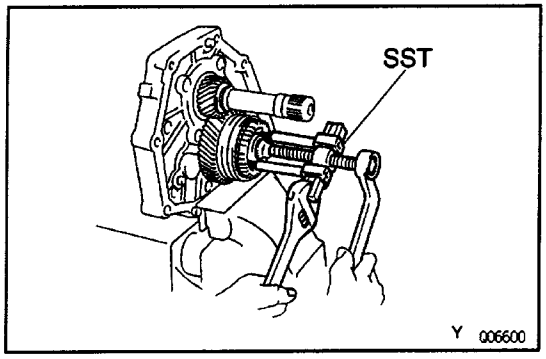

(b) Using SST, remove the gear spline piece No.5.
SST 09950–50010
(c) Remove the synchronizer ring, needle roller bearing and counter 5th gear.

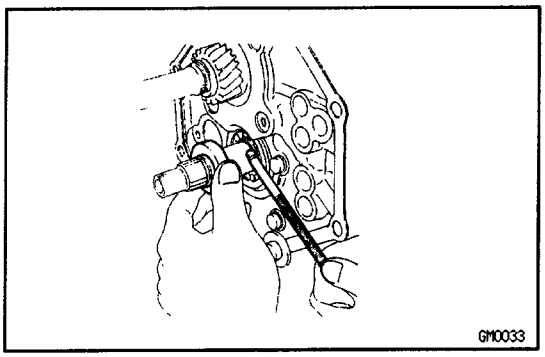

20. REMOVE SPACER AND BALL
(a) Remove the spacer.
(b) Using a magnetic finger, remove the ball.

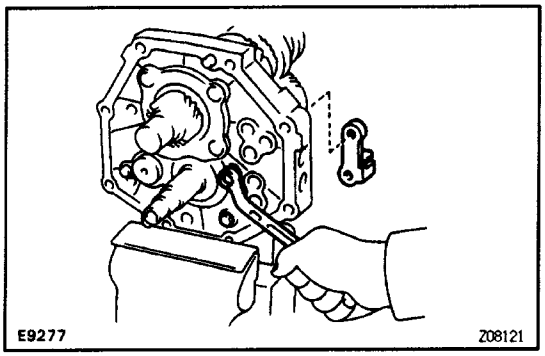

21. REMOVE REVERSE SHIFT ARM BRACKET
Remove the 2 bolts and reverse shift arm bracket.

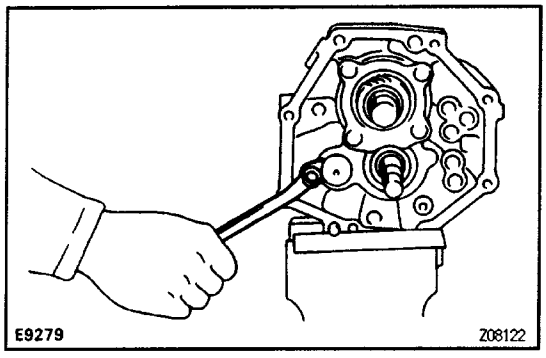

22. REMOVE REVERSE IDLER GEAR AND SHAFT
(a) Remove the reverse idler gear shaft stopper set bolt and stopper.

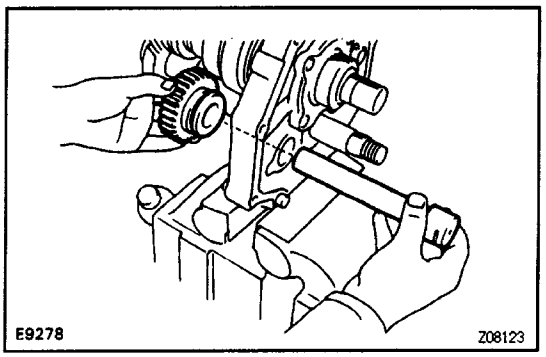

(b) Remove the reverse idler gear and shaft.

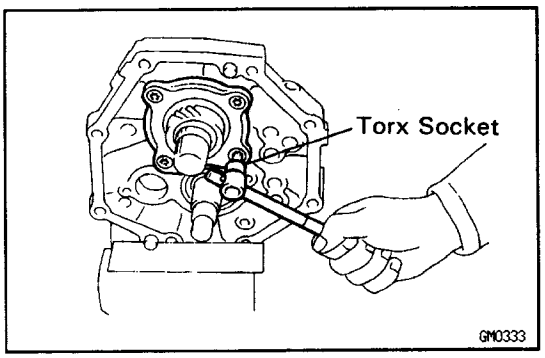

23. REMOVE REAR BEARING RETAINER

Using a torx socket wrench, remove the 4 screws and retainer.

(Torx socket wrench T40 09042–00020)

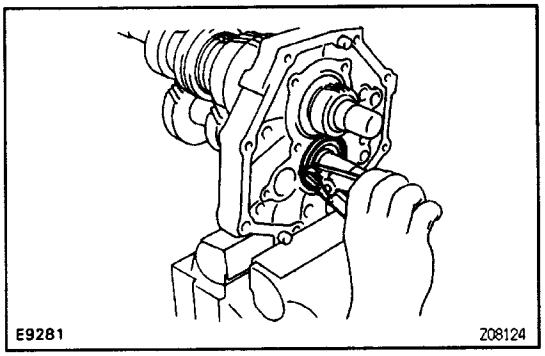

24. REMOVE COUNTER GEAR

(a) Using a snap ring expander, remove the counter gear rear bearing snap ring.

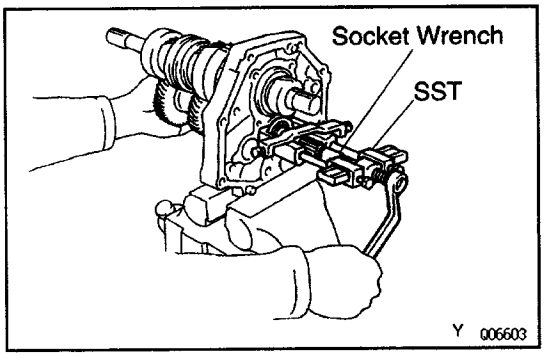

(b) Using SST and a 12 mm socket wrench, remove the counter gear rear bearing.
SST 09950–40010

(c) Remove the counter gear.

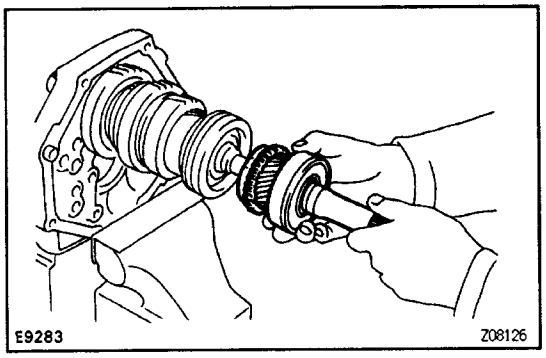

25. REMOVE INPUT SHAFT

Remove the input shaft with the 13 needle roller bearings and synchronizer ring from the output shaft,

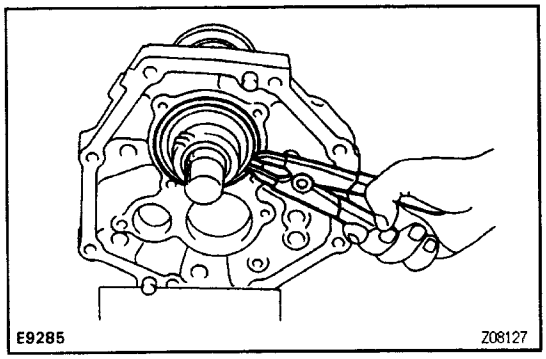

26. REMOVE OUTPUT SHAFT

(a) Using a snap ring expander, remove the output shaft center bearing snap ring.

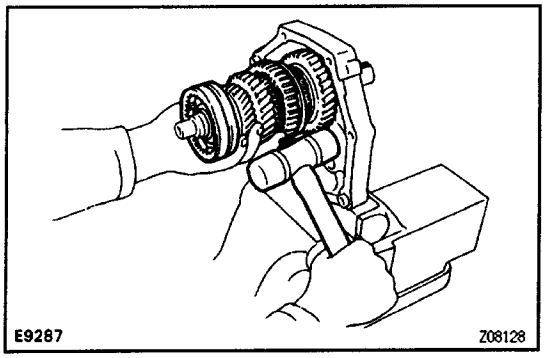

(b) Remove the output shaft, from the intermediate plate by pulling on the output shaft and tapping on the intermediate plate with a plastic hammer.

COUNTER GEAR AND REVERSE IDLER GEAR

COMPONENTS

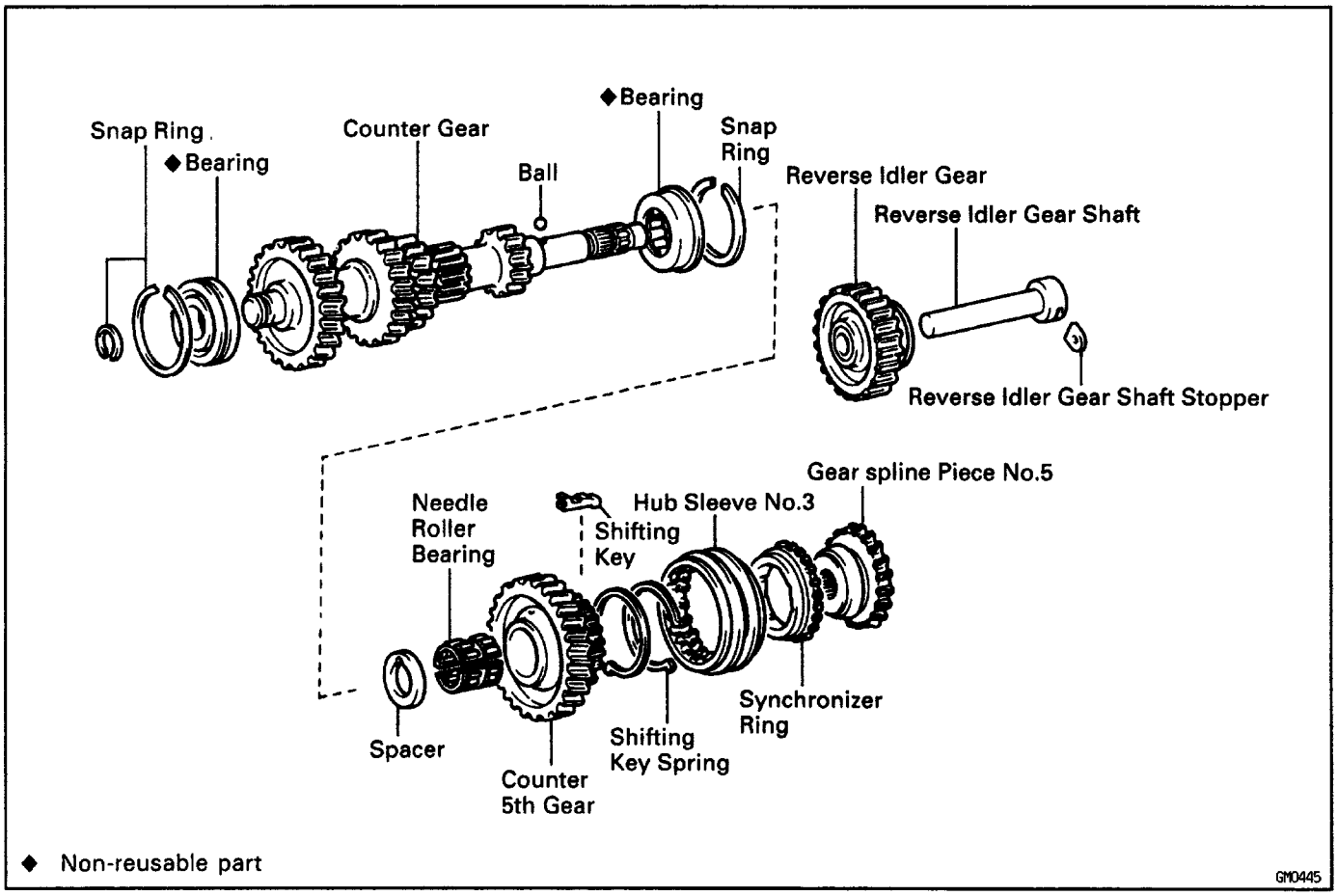

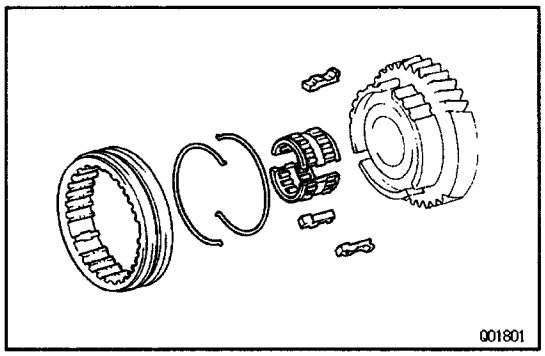

COUNTER GEAR COMPONENT PARTS DISASSEMBLY

REMOVE HUB SLEEVE NO.3, SHIFTING KEYS AND SPRINGS

Using a screwdriver, remove the hub sleeve No.3, 3 shifting keys and 2 springs.

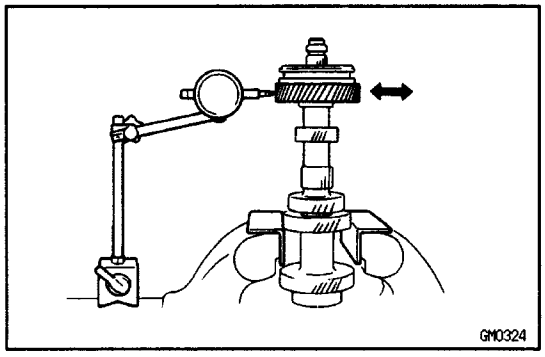

COUNTER GEAR AND REVERSE IDLER GEAR COMPONENT PARTS INSPECTION

1. INSPECT COUNTER 5 TH GEAR RADIAL CLEARANCE

(a) Install the spacer, needle roller bearing and counter 5th gear to the counter gear.

(b) Using a dial indicator, measure the counter 5th gear radial clearance.

Standard clearance:
0.009–0–032 mm (0.0004–0.0013 in.)
Maximum clearance:
0.032 mm (0.0013 in.)
If the clearance exceeds the maximum, replace the gear, needle roller bearing or counter gear assembly.

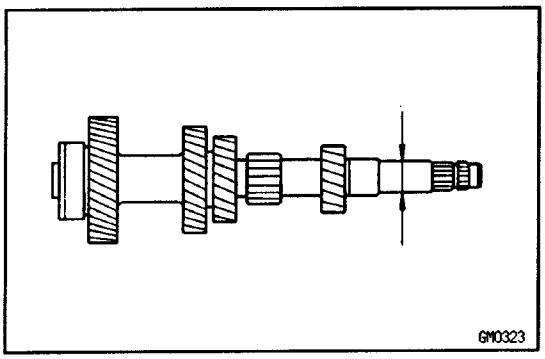

2. INSPECT COUNTER GEAR
Using a micrometer, measure the outer diameter of needle roller bearing race.
Standard outer diameter:
25.98–26.00 mm (1.0228–1.0236 in.)
Minimum outer diameter:
25.86 mm (1.0181 In.)
If the outer diameter is less than the minimum, replace the counter gear assembly.

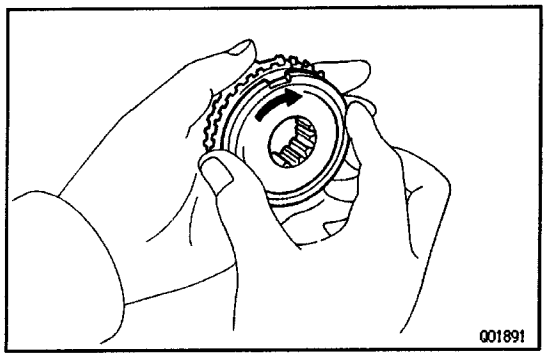

3. INSPECT SYNCHRONIZER RING
(a) Check for wear or damage.
(b) Check the braking effect of the synchronizer ring.
Turn the synchronizer ring in one direction while pushing it to the gear cone. Check that the ring locks.
If the braking effect is insufficient, apply a small amount of fine lapping compound between the synchronizer ring and gear cone.
Lightly rub the synchronizer ring and gear cone together.
NOTICE: Ensure the fins lapping compound is completely washed off after rubbing.
(c) Check again the braking effect of the synchronizer ring. If it does not lock, replace the synchronizer ring.

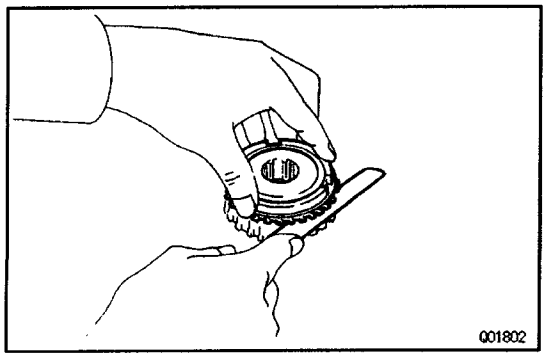

(d) Using a feeler gauge, measure the clearance between the synchronizer ring back and gear spline end.
Minimum clearance:
0.8 mm l0.031 in.)
HINT:
- When replacing either a synchronizer ring or gear, apply a small amount of fine lapping compound between the synchronizer ring and gear cone.

Lightly rub the synchronizer ring and gear cone together.

- When replacing both the synchronizer ring and gear, there is no need to apply any compound or to rub them together.

NOTICE: Ensure the fine lapping compound is completely washed off after rubbing.

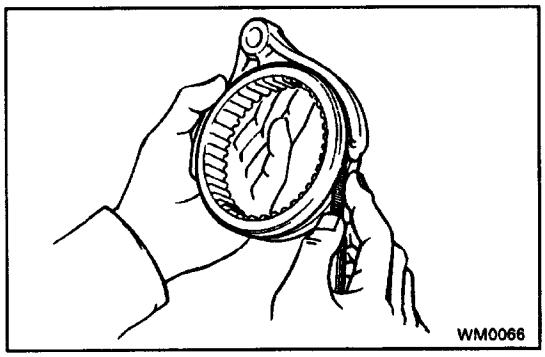

4. INSPECT SHIFT FORKS AND HUB SLEEVES CLEARANCE

Using a feeler gauge, measure the clearance between the hub sleeve and shift fork.

Maximum clearance:

1.0 mm (0.039 in.)

If the clearance exceeds the maximum, replace the shift fork or hub sleeve.

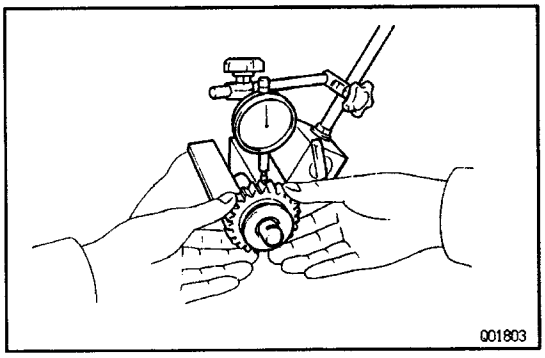

5. INSPECT REVERSE IDLER GEAR RADIAL CLEARANCE

Using a dial indicator, measure the reverse idler gear radial clearance.

Standard clearance:

0.04–0.08 mm (0.0016–0.0031 in.)

Maximum clearance:

0.13 mm (0.0051 in.)

If the clearance exceeds the maximum, replace the gear or shaft.

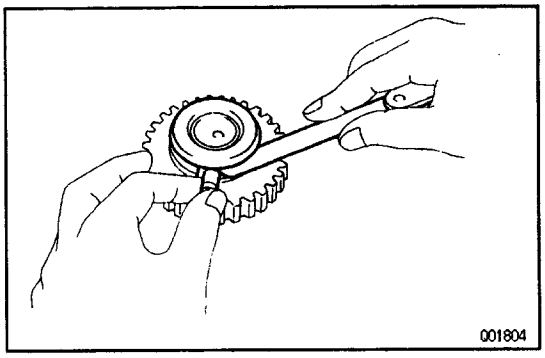

6. INSPECT REVERSE IDLER GEAR AND SHIFT ARM SHOE CLEARANCE

Using a feeler gauge, measure the clearance between the reverse idler gear and shift arm shoe.

Standard clearance:

0.05 – 0.27 mm (0.0020 – 0.0106 in.)

Maximum clearance:

0.50 mm (0.0197 in.)

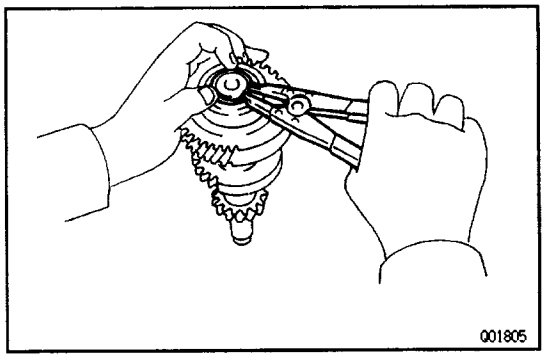

BEARING REPLACEMENT

IF NECESSARY. REPLACE COUNTER GEAR FRONT BEARING

(a) Using a snap ring expander, remove the snap ring.

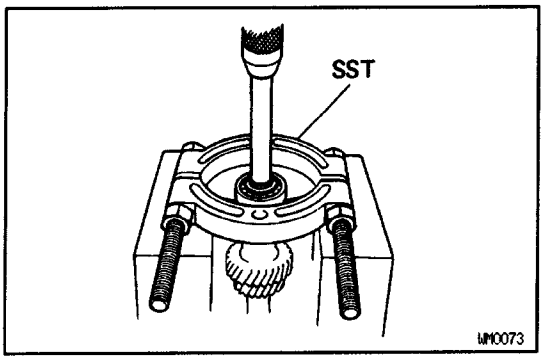

(b) Using SST and a press, remove the bearing.
SST 09950–00020

(c) Replace the side race.

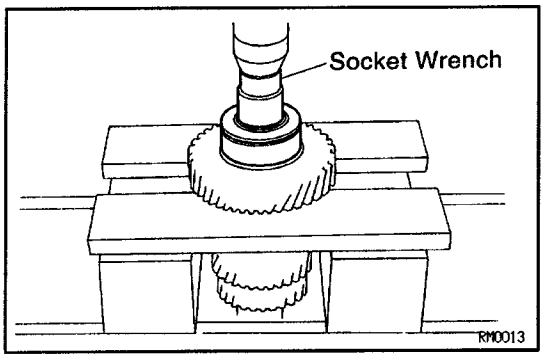

(d) Using a socket wrench and press, install a new bear–ing, the side race and inner race.

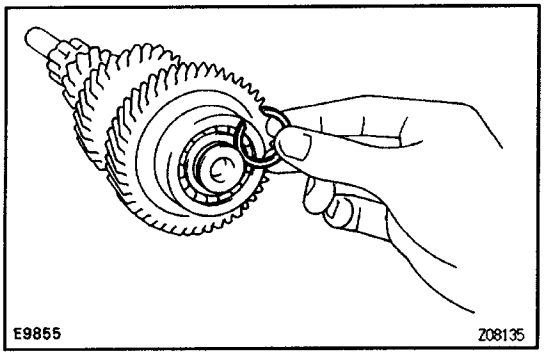

(e) Select a snap ring that will allow minimum axial play.

Mark	Thickness mm (in.)
1	2.05−2.10 (0.0807−0.0827)
2	2.10−2.15 (0.0827−0.0846)
3	2.15−2.20 (0.0846−0.0866)
4	2.20−2.25 (0.0866−0.0886)
5	2.25−2.30 (0.0886−0.0906)
6	2.30−2.35 (0.0906−0.0925)

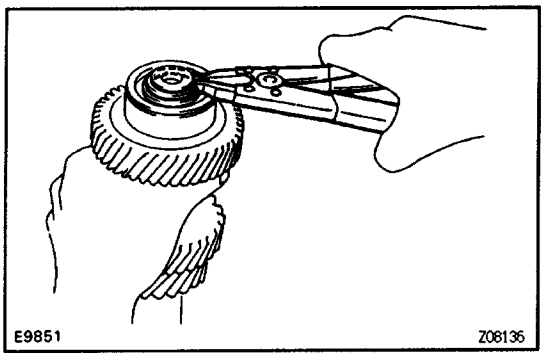

(f) Using a snap ring expander, install the snap ring.

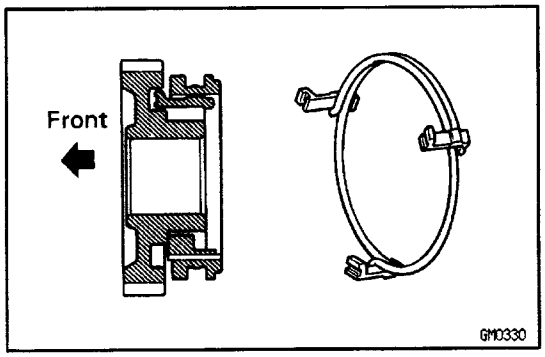

COUNTER GEAR COMPONENT PARTS ASSEMBLY

INSTALL HUB SLEEVE NO.3. SHIFTING KEYS AND SPRINGS

(a) Install the clutch hub and shifting keys to the hub sleeve.

(b) Install the shifting key springs under the shifting keys.

NOTICE: Install the key springs positioned so that their end gaps are not in line.

G58 MANUAL TRANSMISSION

DESCRIPTION

Transmission type G58 uses constant mesh synchronizers for forward gears, and a sliding mesh reverse gear.

The input shaft is composed of the 1st and 2nd speed gears and the reverse drive gear, and the output shaft is composed of the drive gear (for use with the ring gear).

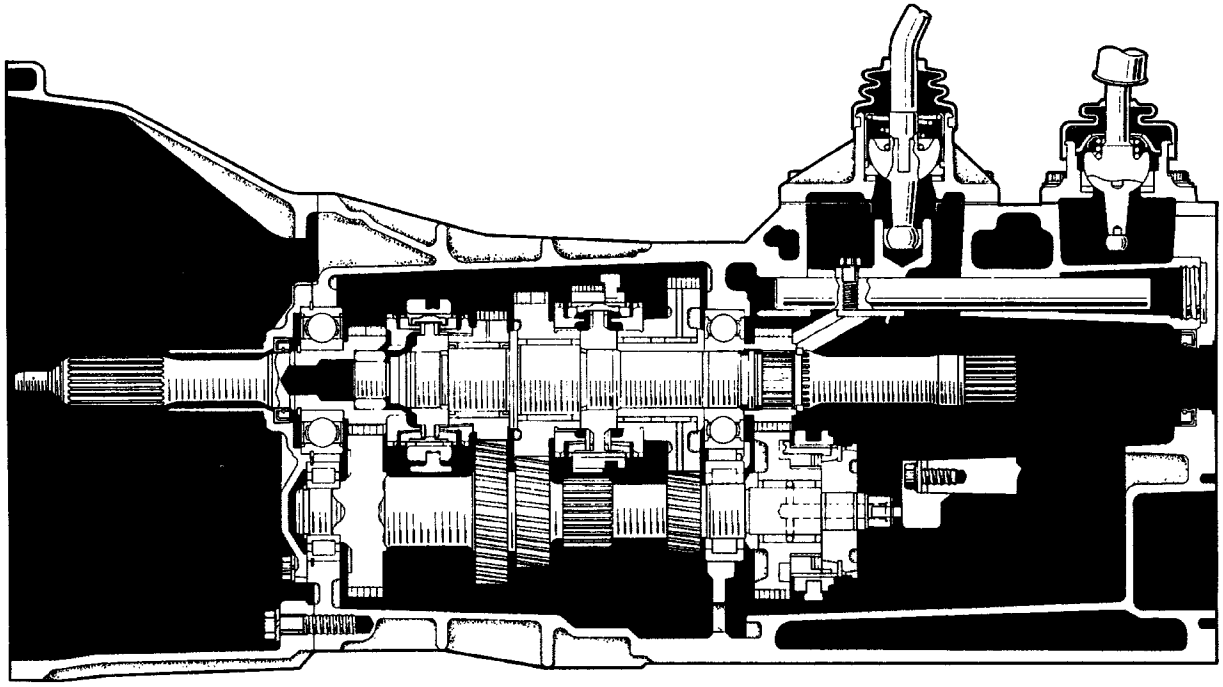

Type of Transmission		G58
Type of Engine		22R–E
Gear Ratio	1st Gear	3.928
	2nd Gear	2.142
	3rd Gear	1.397
	4th Gear	1.000
	5th Gear	0.851
	Reverse Gear	4.743
Oil Capacity		3.9 liters (4.1 US qts, 3.4 Imp. qts)
Oil Viscosity		SAE 75W–90
Oil Grade		API GL–3, GL–4 or GL–5

FRONT BEARING RETAINER

COMPONENTS

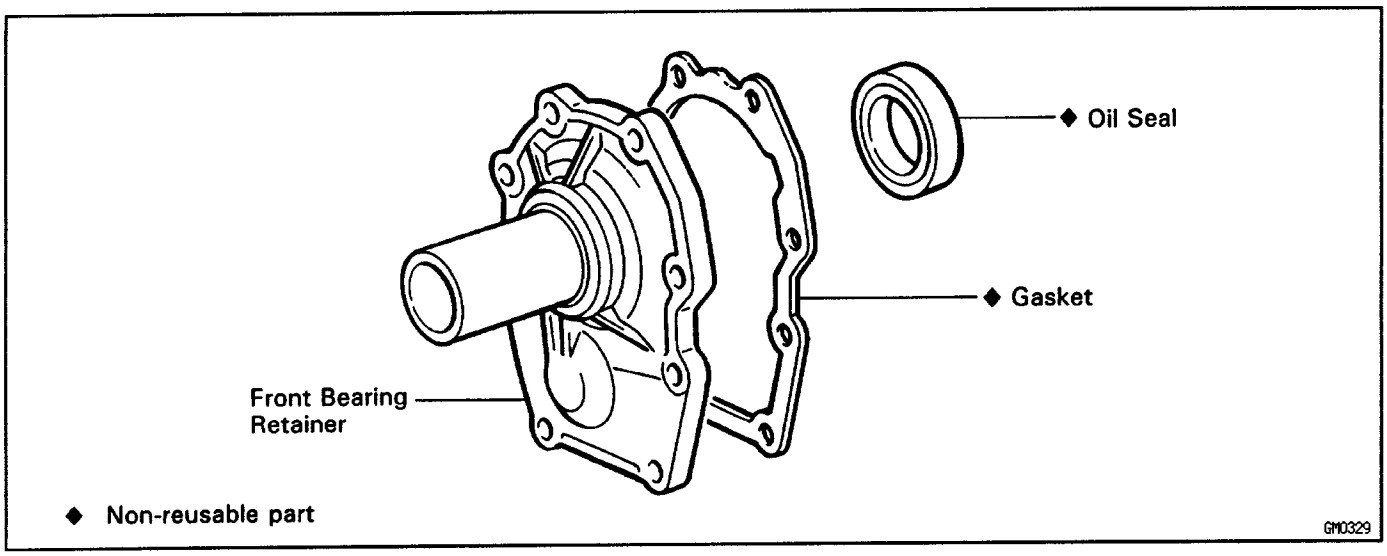

OIL SEAL REPLACEMENT

IF NECESSARY, REPLACE FRONT BEARING RETAINER OIL SEAL

(a) Using a screwdriver, pry out the oil seal.

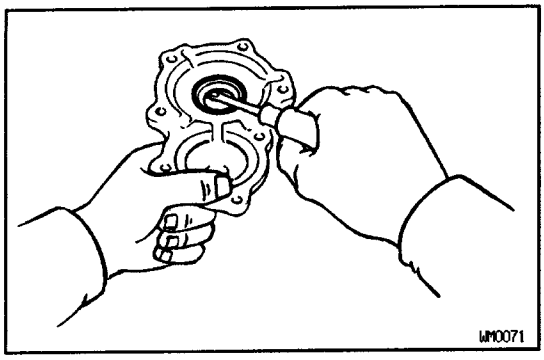

(b) Using SST and a press, press in a new oil seal.

SST 09223–50010

Oil seal depth:

12.2–13.2 mm (0.480–0.520 in.)

Transmission case installation surface.

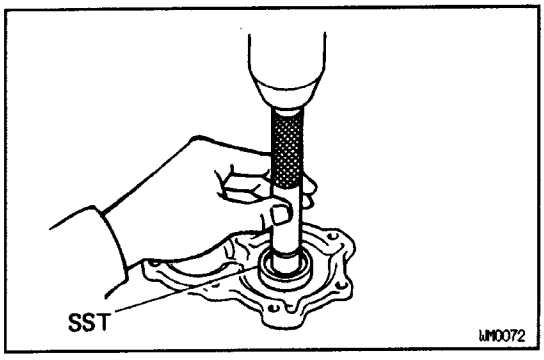

(c) Coat the lip of the oil seal with MP grease.

INPUT SHAFT
COMPONENTS

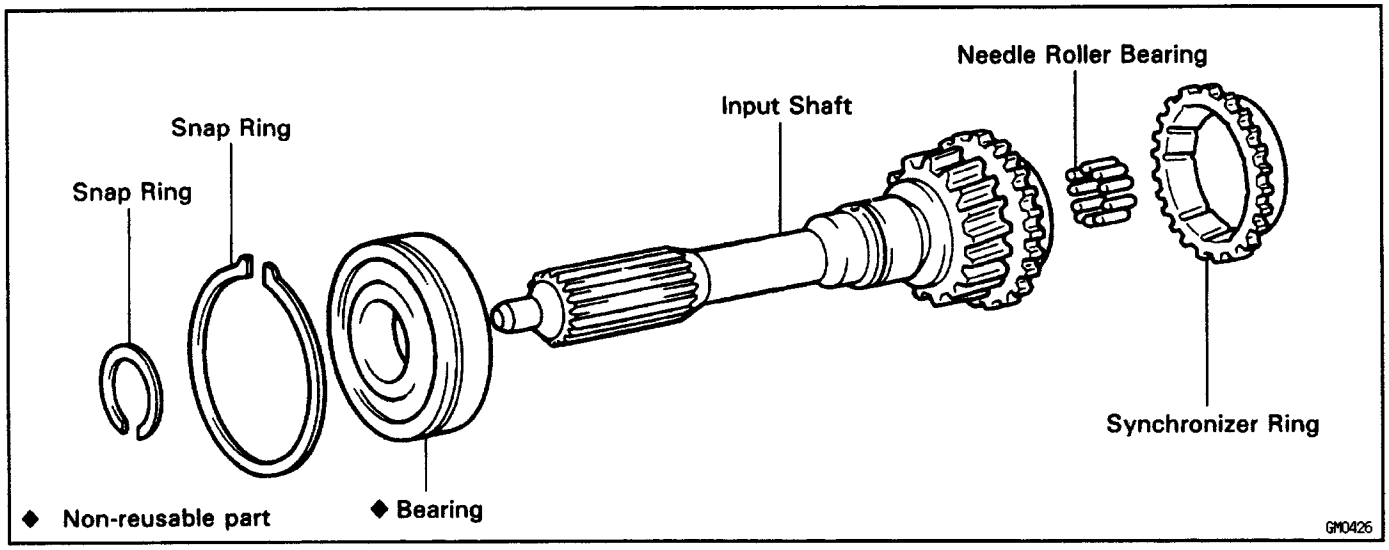

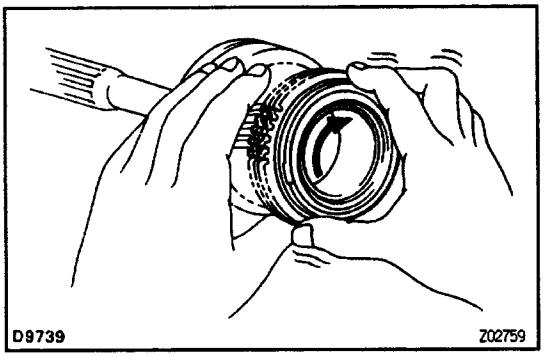

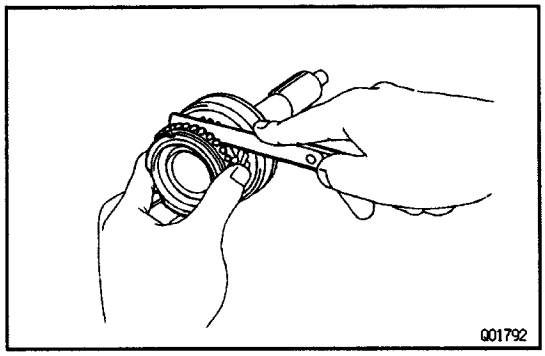

INPUT SHAFT INSPECTION

INSPECT SYNCHRONIZER RING

(a) Check for wear or damage.

(b) Check the braking effect of the synchronizer ring.

Turn the synchronizer ring in one direction while pushing it to the gear cone. Check that the ring locks. If the braking effect is insufficient, apply a small amount of fine lapping compound between the synchronizer ring and gear cone.

Lightly rub the synchronizer ring and gear cone together.

NOTICE: Ensure the fine lapping compound is completely washed off after rubbing.

(c) Check again the braking effect of the synchronizer ring. If it does not lock, replace the synchronizer ring.

(d) Using a feeler gauge, measure the clearance between the synchronizer ring back and gear spline end.

Minimum clearance:

0.8 mm (0.031 in.)

HINT:

- When replacing either a synchronizer ring or gear, apply a small amount of fine lapping compound between the synchronizer ring and gear cone.

  Lightly rub the synchronizer ring and gear cone together.

- When replacing both the synchronizer ring and gear, there is no need to apply any compound or to rub them together.

NOTICE: Ensure the fine lapping compound is completely washed off after rubbing.

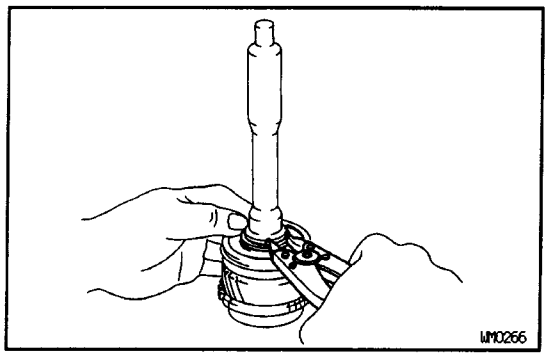

BEARING REPLACEMENT

IF NECESSARY, REPLACE INPUT SHAFT BEARING

(a) Using a snap ring expander, remove the snap ring.

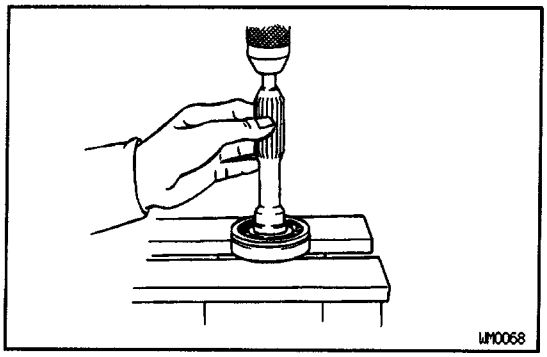

(b) Using a press, remove the bearing.

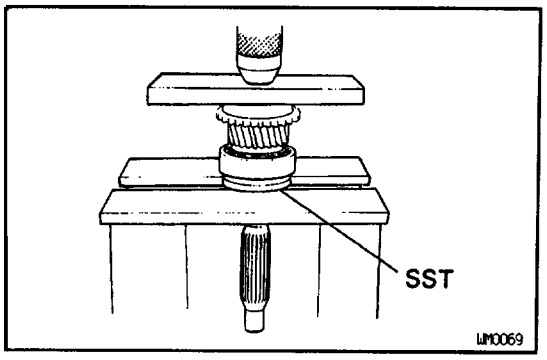

(c) Using SST and a press, install a now bearing.
SST 09506–35010

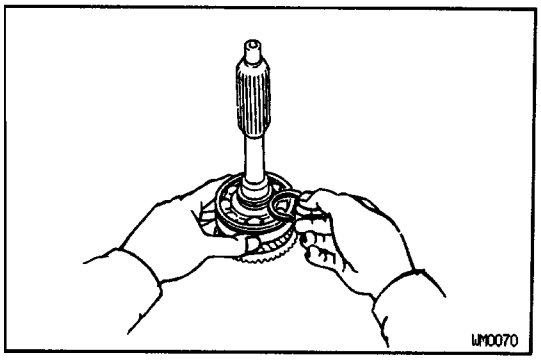

(d) Select a snap ring that will allow minimum axial play.

Mark	Thickness mm (in.)
0	2.05–2.10 (0.0807–0.0827)
1	2.10–2.15 (0.0827–0.0846)
2	2.15–2.20 (0.0846–0.0866)
3	2.20–2.25 (0.0866–0.0886)
4	2.25–2.30 (0.0886–0.0906)
5	2.30–2.35 (0.0906–0.0925)

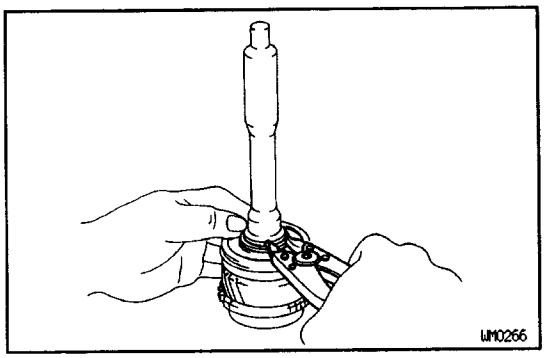

(e) Using a snap ring expander, install the snap ring.

OPERATION

- The illustration below shows the engagements of the transmission gears.

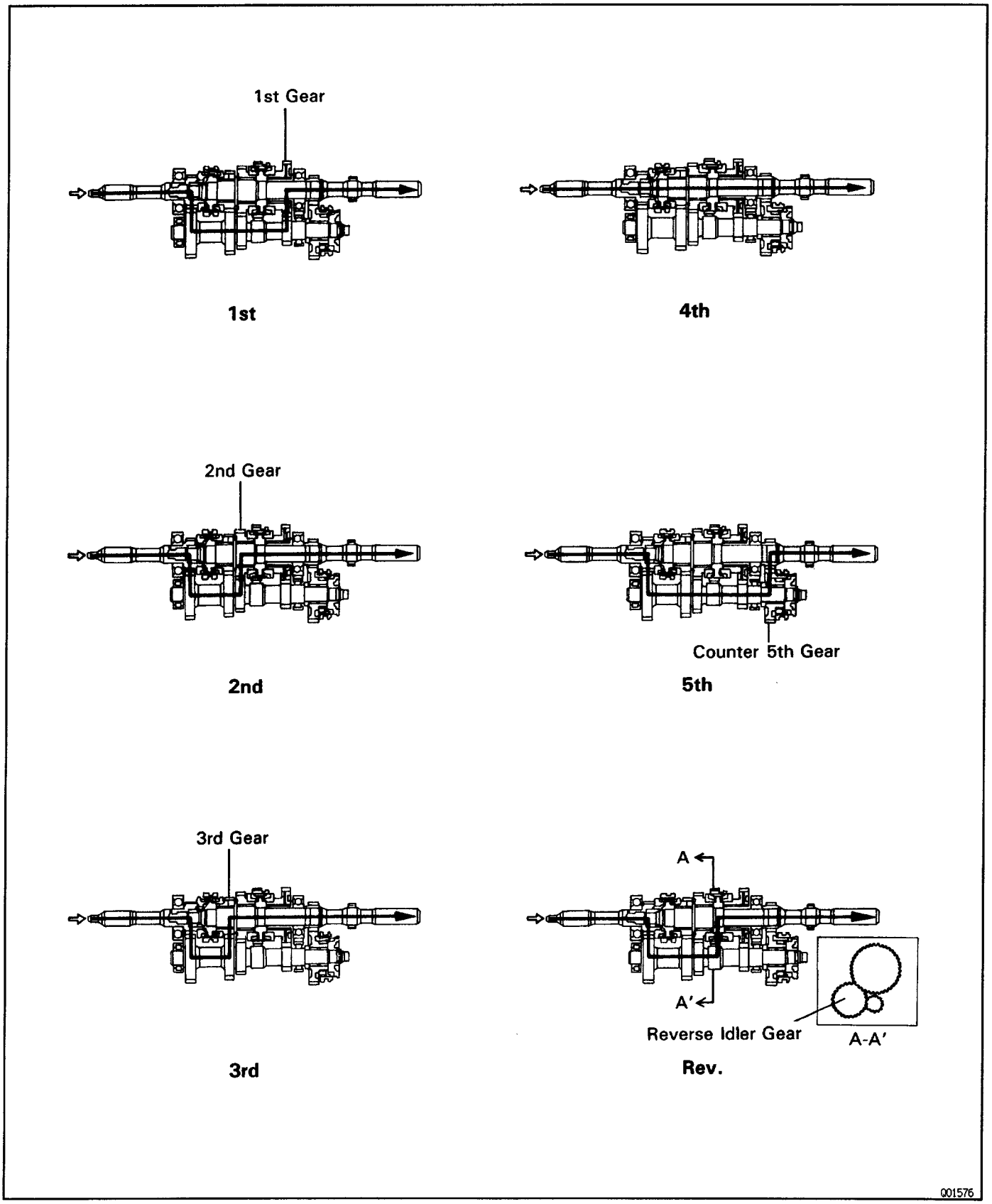

OUTPUT SHAFT
COMPONENTS

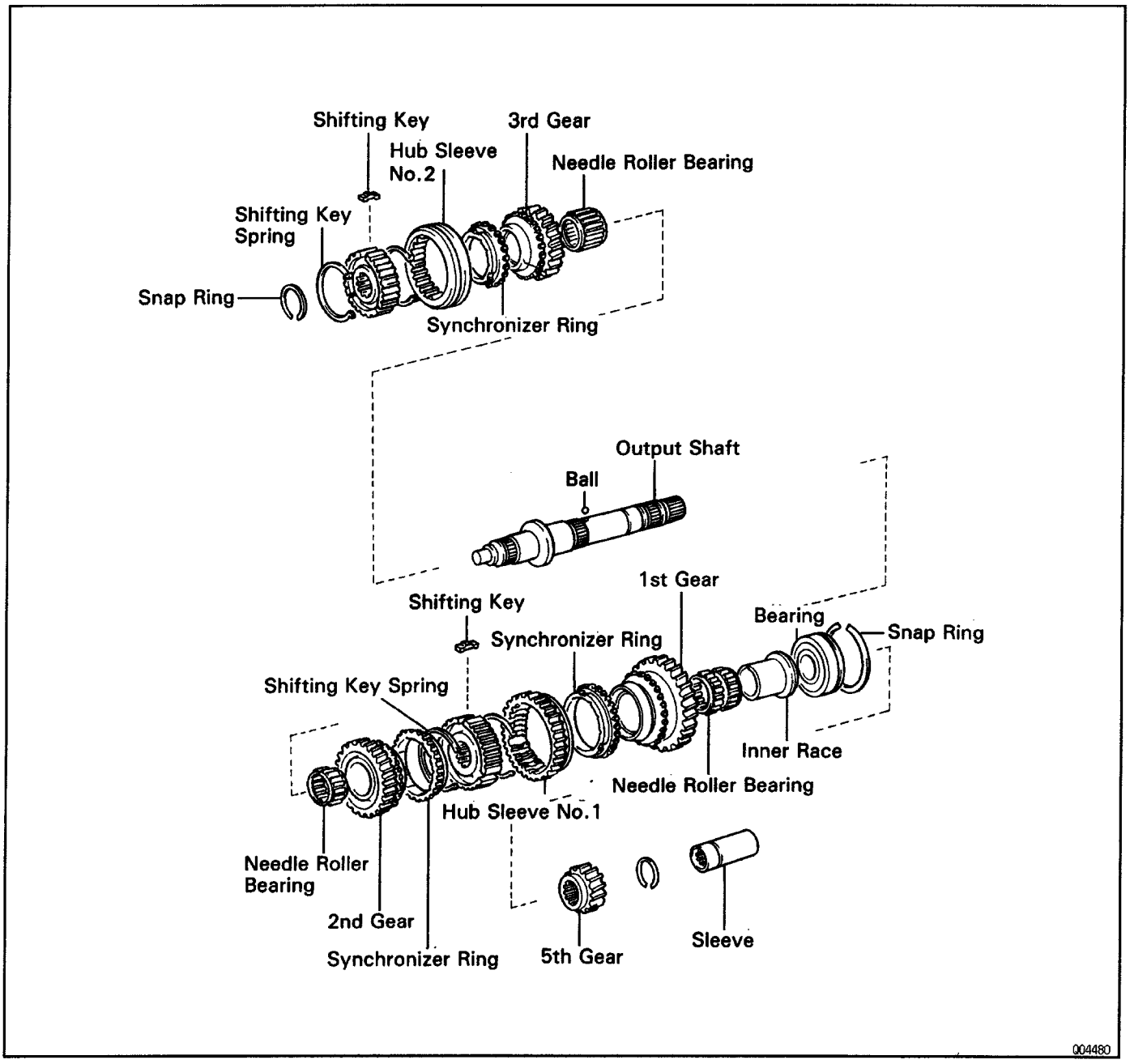

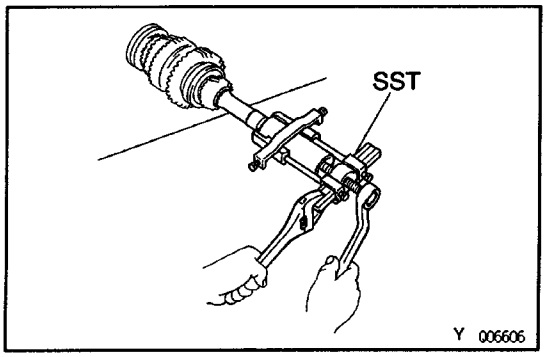

OUTPUT SHAFT DISASSEMBLY

1. REMOVE SLEEVE FROM OUTPUT SHAFT

Using SST, remove the sleeve from the output shaft.
SST 09950–40010

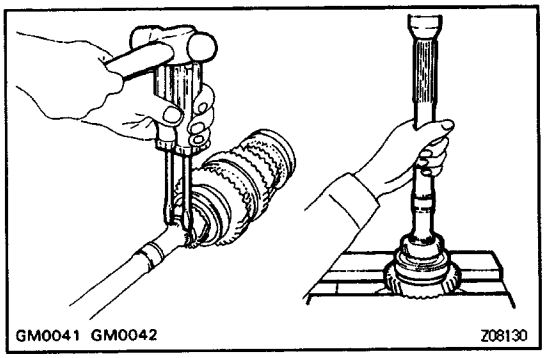

2. REMOVE 5TH GEAR, REAR BEARING, 1ST GEAR, INNER RACE AND NEEDLE ROLLER BEARING

(a) Using 2 screwdrivers and a hammer, tap out the snap ring.

(b) Using a press, remove the 5th gear, rear bearing, 1st gear and inner race.

(c) Remove the needle roller bearing.

3. REMOVE SYNCHRONIZER RING

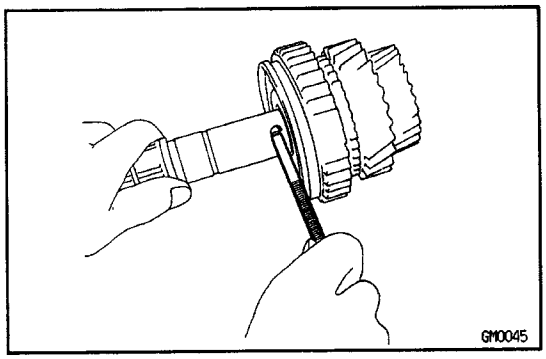

4. REMOVE LOCKING BALL

Using a magnetic finger, remove the locking ball.

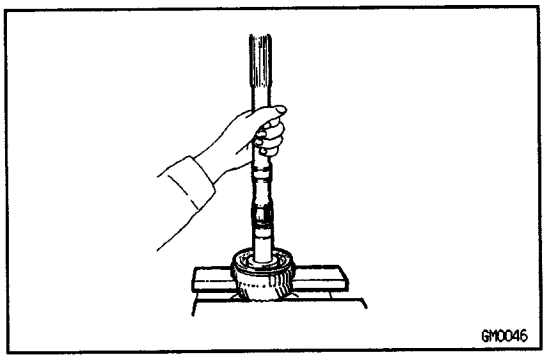

5. REMOVE HUB SLEEVE NO.1 ASSEMBLY, SYNCH–RONIZER RING, 2ND GEAR AND NEEDLE ROLLER BEARING

(a) Using a press, remove the hub sleeve No. 1, synchronizer ring and 2nd gear.

(b) Remove the needle roller bearing.

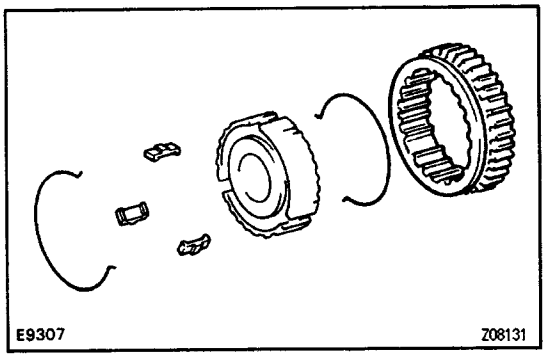

6. REMOVE HUB SLEEVE NO.1, SHIFTING KEYS AND SPRINGS FROM CLUTCH HUB NO.1

Using a screwdriver, remove the 3 shifting keys and springs from the clutch hub No.1.

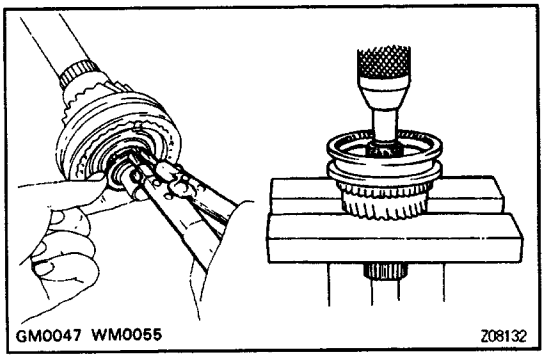

7. REMOVE HUB SLEEVE NO.2 ASSEMBLY, SYNCH, RONIZER RING, 3RD GEAR AND NEEDLE ROLLEF BEARING

(a) Using a snap ring expander, remove the snap ring.

(b) Using a press, remove the hub sleeve No.2 assembly synchronizer ring and 3rd gear.

(c) Remove the needle roller bearing.

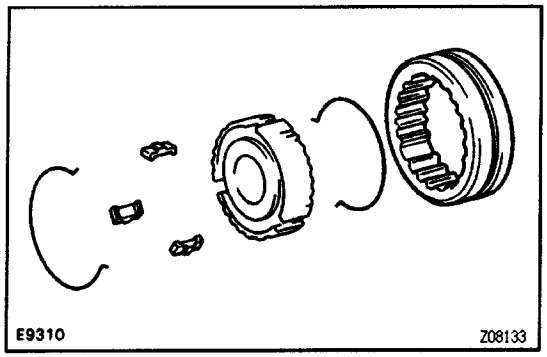

8. REMOVE HUB SLEEVE NO.2. SHIFTING KEYS AND SPRINGS FROM CLUTCH HUB NO.2

Using a screwdriver, remove the 3 shifting keys and 2 springs from the clutch hub No.2.

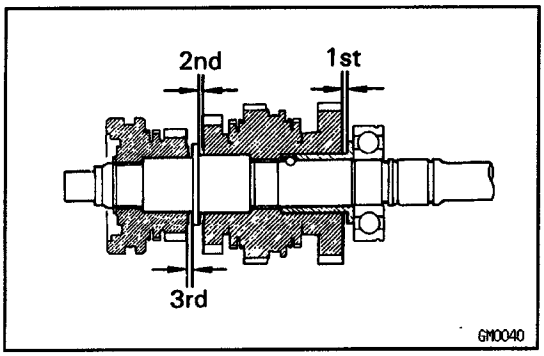

OUTPUT SHAFT COMPONENT PARTS INSPECTION

1. INSPECT EACH GEAR THRUST CLEARANCE

Using a feeler gauge, measure the thrust clearance of each gear.

Standard clearance:

0.10–0.25 mm (0.0039–0.0098 in.)

Maximum clearance:

0.25 mm (0.0098 in.)

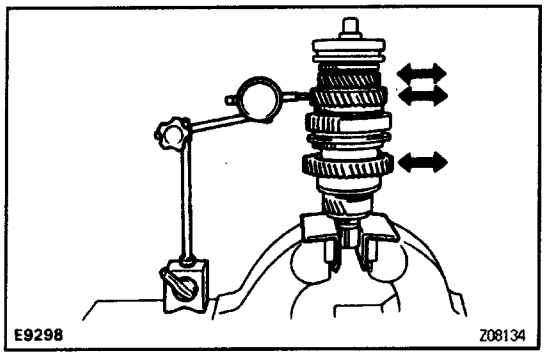

2. INSPECT EACH GEAR RADIAL CLEARANCE

Using a dial indicator, measure each gear radial clearance.

Standard clearance:

0.009–0.032 mm (0.0004–0.0013 in.)

Maximum clearance:

0.032 mm (0.0013 in.)

If the clearance exceeds the maximum, replace the gear, needle roller bearing or output shaft.

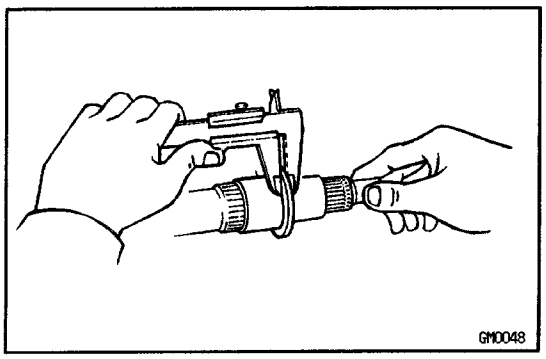

3. INSPECT OUTPUT SHAFT AND INNER RACE

(a) Using calipers, measure the output shaft flange thickness.

Minimum thickness:

4.80 mm (0.1890 in.)

If the thickness is less than the minimum, replace the output shaft.

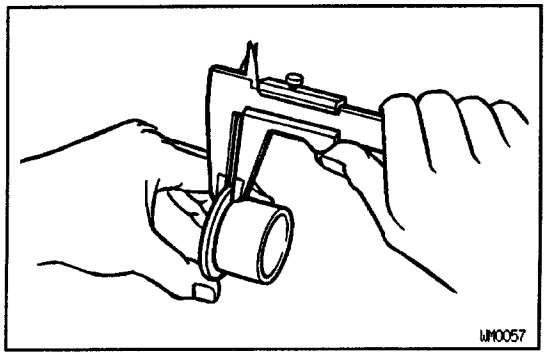

(b) Using calipers, measure the inner race flange thickness.

Minimum thickness:

3.99 mm (0.1571 in.)

If the thickness is less than the minimum, replace the inner race.

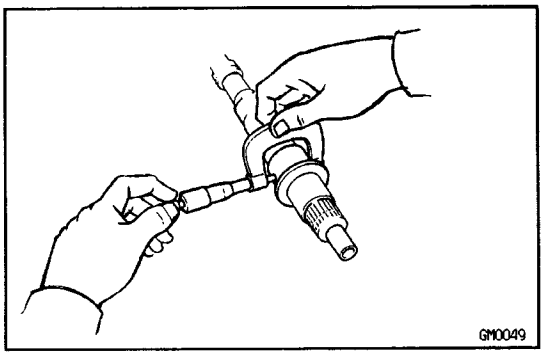

(c) Using a micrometer, measure the outer diameter of the output shaft journal.

Minimum diameter:

2nd gear

37.984 mm (1.4954 in.)

3rd gear

34.984 mm (1.3773 in.)

If the outer diameter is less than the minimum, replace the output shaft.

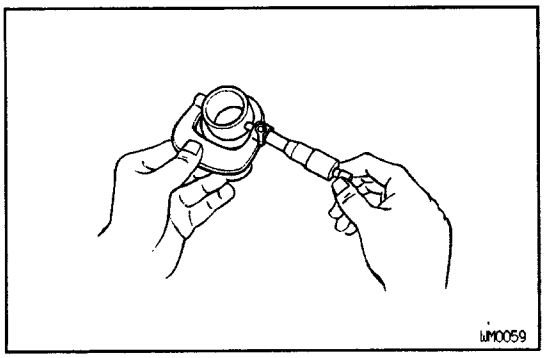

(d) Using a micrometer, measure the outer diameter of the inner race.

Minimum diameter:

38.985 mm (1.5348 in.)

If the outer diameter is less than the minimum, replace the inner race.

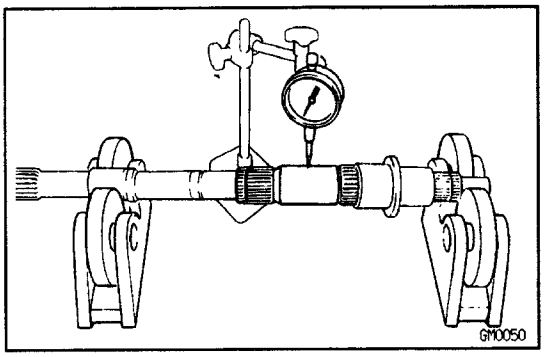

(e) Using a dial indicator, check the shaft runout.

Maximum runout:

0.05 mm (0.0020 in.)

If the runout exceeds the maximum, replace the output shaft.

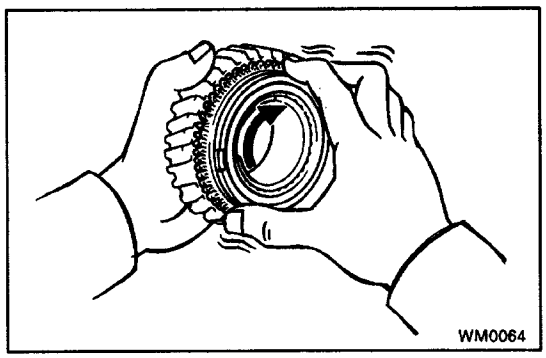

4. INSPECT SYNCHRONIZER RING

(a) Check for wear or damage.

(b) Check the braking effect of the synchronizer ring.

Turn the synchronizer ring in one direction while pushing it to the gear cone. Check that the ring locks.

If the braking effect is insufficient, apply a small amount of fine lapping compound between the synchronizer ring and gear cone.

Lightly rub the synchronizer ring and gear cone together.

NOTICE: Ensure the fine lapping compound is completely washed off after rubbing.

(c) Check again the braking effect of the synchronizer ring. If it does not lock, replace the synchronizer ring.

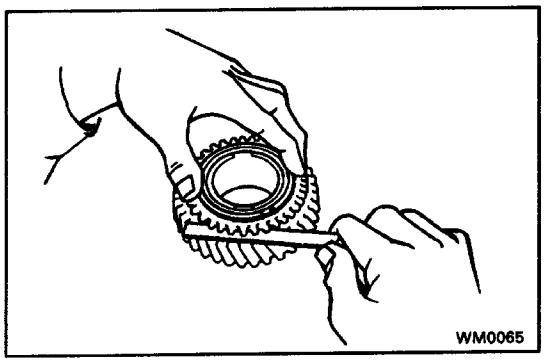

(d) Using a feeler gauge, measure the clearance between the synchronizer ring back and gear spline end.

Minimum clearance:
0.8 mm (0.031 in.)

HINT:

- When replacing either a synchronizer ring or gear, apply a small amount of fine lapping compound between the synchronizer ring and gear cone.
  Lightly rub the synchronizer ring and gear cone together.
- When replacing both the synchronizer ring and gear, there is no need to apply any compound or to rub them together.

NOTICE: Ensure the fine lapping compound is completely washed off after rubbing.

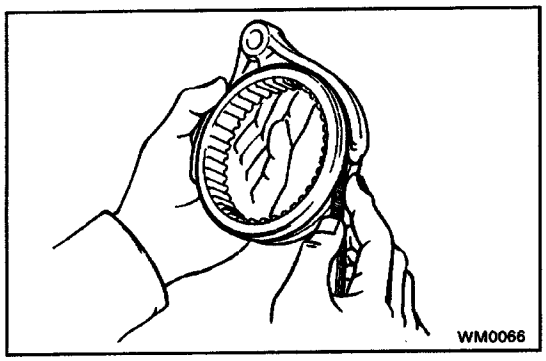

5. INSPECT SHIFT FORKS AND HUB SLEEVES CLEARANCE

Using a feeler gauge, measure the clearance between the hub sleeve and shift fork.

Maximum clearance:
1.0 mm (0.039 in.)

If the clearance exceeds the maximum, replace the shift fork or hub sleeve.

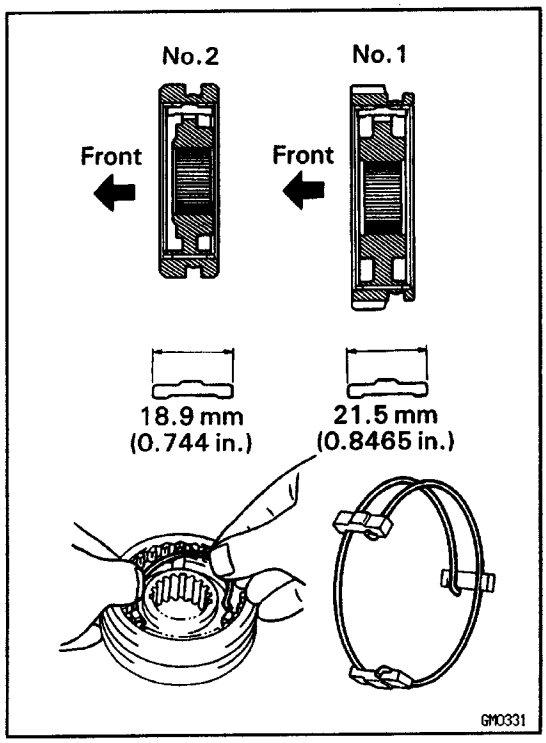

OUTPUT SHAFT ASSEMBLY

HINT: Coat all of the sliding and rotating surfaces with gear oil before assembly.

1. INSTALL CLUTCH HUB NO.1 AND NO.2 INTO HUB SLEEVE NO.1 AND NO.2

(a) Install the clutch hub and shifting keys to the hub sleeve.

(b) Install the shifting key springs under the shifting keys.

NOTICE: Install the key springs positioned so that their end gaps are not in line.

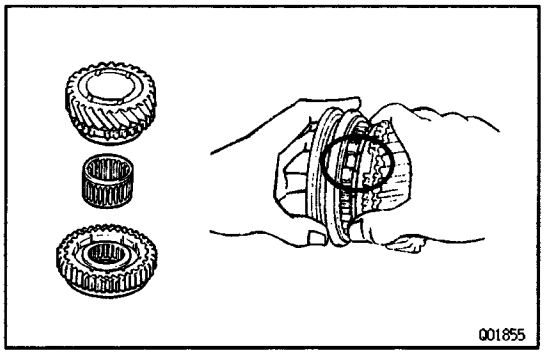

2. INSTALL 3RD GEAR AND HUB SLEEVE NO.2 ON OUTPUT SHAFT

(a) Apply gear oil to the shaft and needle roller bearing.

(b) Place the synchronizer ring on the gear and align the ring slots with the shifting keys.

(c) Install the needle roller bearing in the 3rd gear.

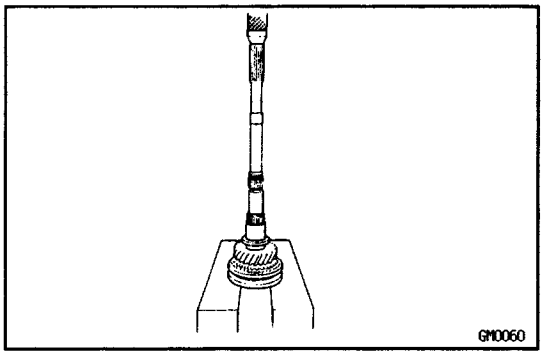

(d) Using a press, install the 3rd gear and hub sleeve No.2.

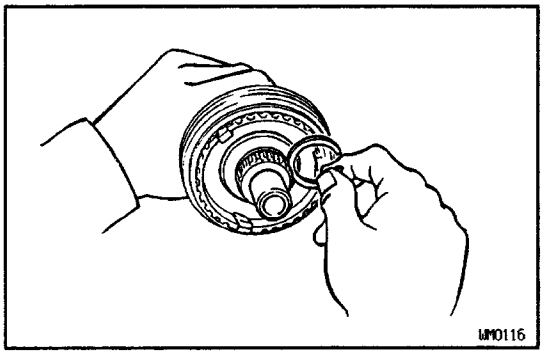

3. INSTALL SNAP RING

(a) Select a snap ring that will allow minimum axial play.

Mark	Thickness mm (in.)
C−1	1.75−1.80 (0.0689−0.0709)
D	1.80−1.85 (0.0709−0.0728)
D−1	1.85−1.90 (0.0728−0.0748)
E	1.90−1.95 (0.0748−0.0768)
E−1	1.95−2.00 (0.0768−0.0787)
F	2.00−2.05 (0.0787−0.0807)
F−1	2.05−2.10 (0.0807−0.0827)

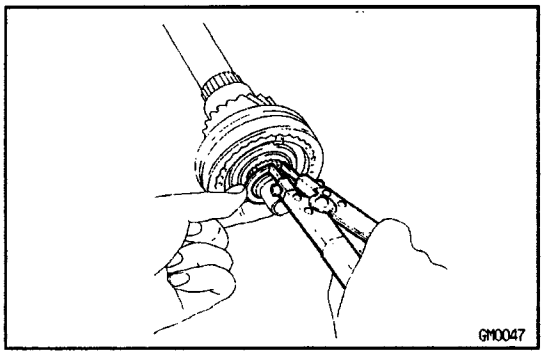

(b) Using a snap ring expander, install the snap ring.

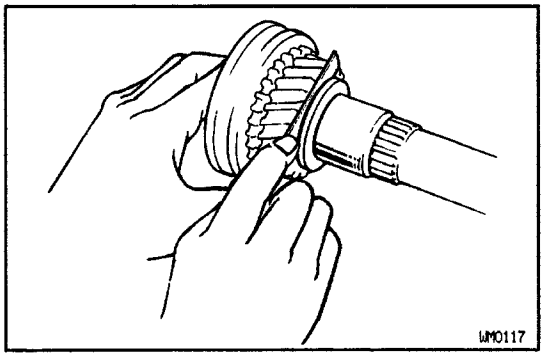

4. INSPECT 3RD GEAR THRUST CLEARANCE

Using a feeler gauge, measure the 3rd gear thrust clearance.

Standard clearance:

0.10–0.25 mm (0.0039–0.0098 in.)

Maximum clearance:

0.25 mm (0.0098 in.)

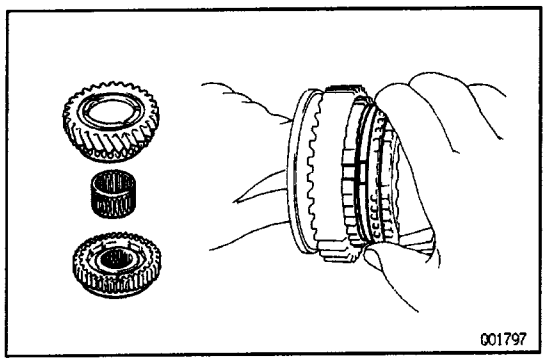

5. INSTALL 2ND GEAR AND HUB SLEEVE NO.9

(a) Apply gear oil to the shaft and needle roller bearing.
(b) Place the synchronizer ring on the gear and align the ring slots with the shifting keys.
(c) Install the needle roller bearing in the 2nd gear.

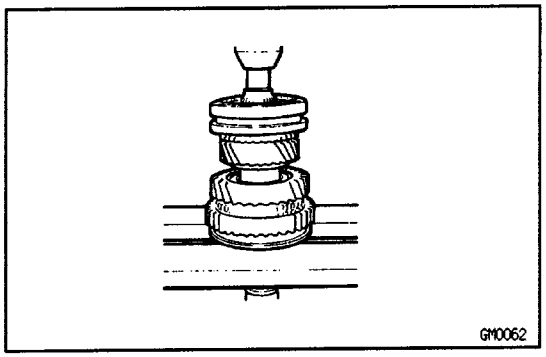

(d) Using a press, install the 2nd gear and hub sleeve No. 1.

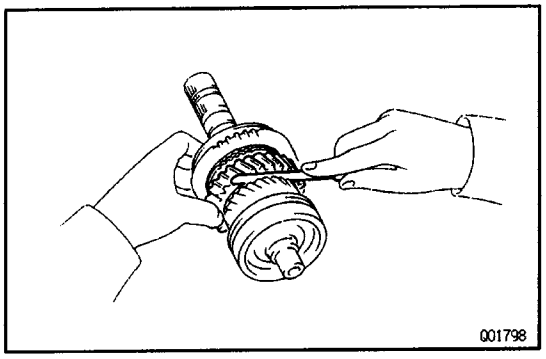

6. INSPECT 2ND GEAR THRUST CLEARANCE

Using a feeler gauge, measure the 2nd gear thrust clearance.

Standard clearance:
0.10–0.25 mm (0.0039–0.0098 in.)
Maximum clearance:
0.25 mm (0.0098 in.)

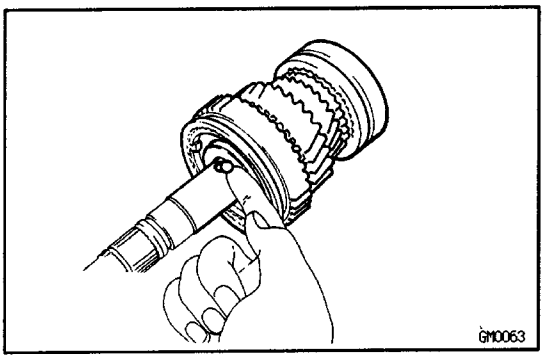

7. INSTALL LOCKING BALL AND 1ST GEAR ASSEMBLY

(a) Install the locking ball in the shaft.

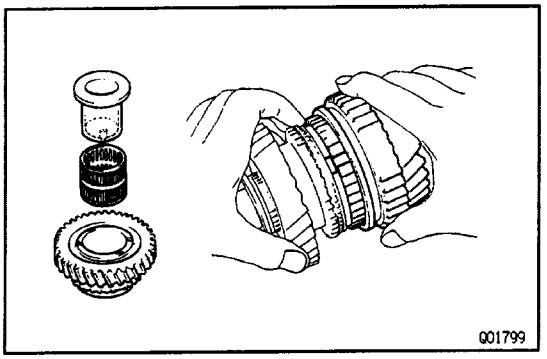

(b) Apply gear oil to the needle roller bearing.
(c) Assemble the 1st gear, synchronizer ring, needle roller bearing and bearing inner race.
(d) Install the assembly on the output shaft with the synchronizer ring slots aligned with the shifting keys.
(e) Turn the inner race to align it with the locking ball.

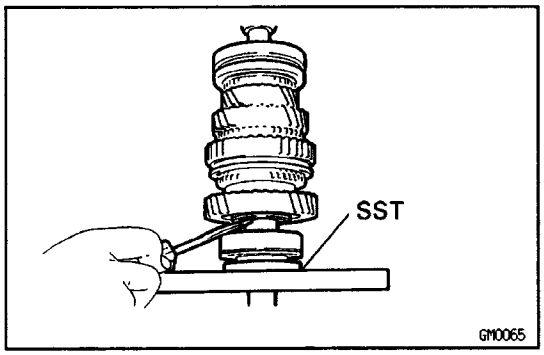

8. INSTALL OUTPUT SHAFT REAR BEARING

Using SST and a press, install the bearing on the output shaft with the outer race snap ring groove toward the rear.

HINT: Hold the 1 st gear inner race to prevent it from falling.

SST 09506 – 35010

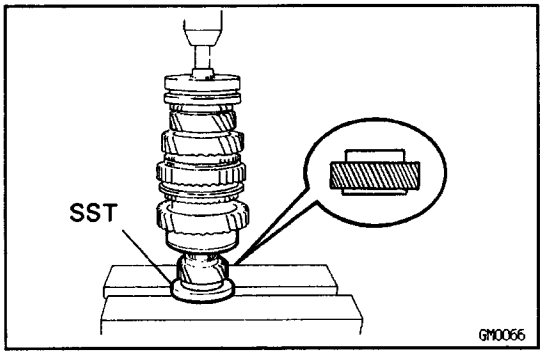

9. INSTALL 5TH GEAR

Using SST and a press, install the 5th gear.

SST 09506 – 35010

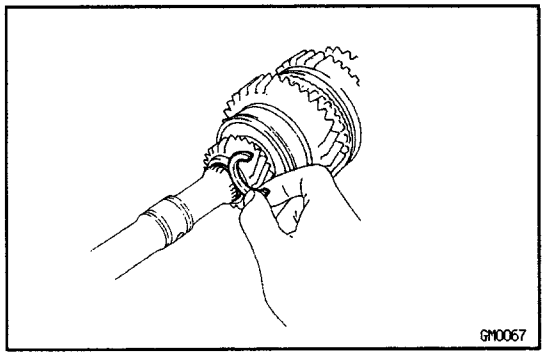

10. INSTALL SNAP RING

(a) Select a snap ring that will allow minimum axial play.

Mark	Thickness mm (in.)
A	2.67 – 2.72 (0.1051 – 0.1071)
B	2.73 – 2.78 (0.1075 – 0.1094)
C	2.79 – 2.84 (0.1098 – 0.1118)
D	2.85 – 2.90 (0.1122 – 0.1142)
E	2.91 – 2.96 (0.1146 – 0.1165)
F	2.97 – 3.02 (0.1169 – 0.1189)
G	3.03 – 3.08 (0.1193 – 0.1213)
H	3.09 – 3.14 (0.1217 – 0.1236)
J	3.15 – 3.20 (0.1240 – 0.1260)
K	3.21 – 3.26 (0.1264 – 0.1283)
L	3.27 – 3.32 (0.1287 – 0.1307)

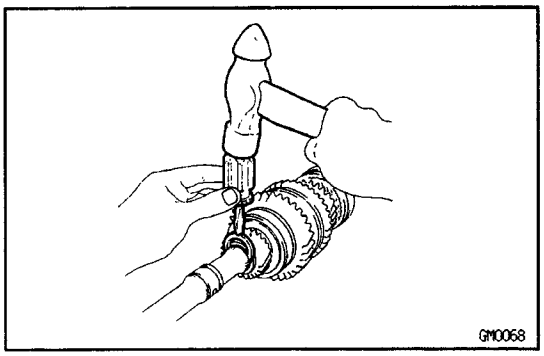

(b) Using a screwdriver and hammer, tap in the snap ring.

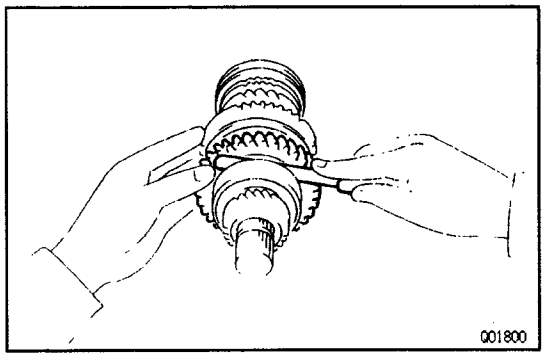

11. INSPECT 1 ST GEAR THRUST CLEARANCE

Using a feeler gauge, measure the 1 st gear thrust clearance.

Standard clearance:

0.10–0.25 mm (0.0039–0.0098 in.)

Maximum clearance:

0.25 mm (0.0098 in.)

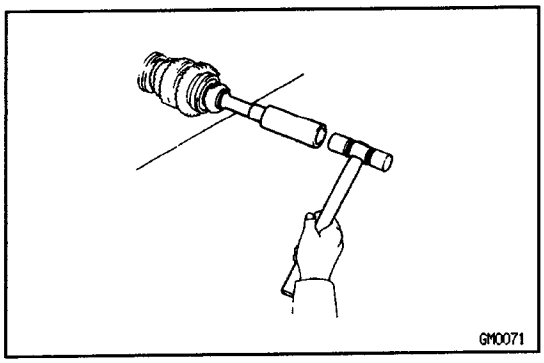

12. INSTALL SLEEVE TO OUTPUT SHAFT

Using a plastic hammer, tap the sleeve onto the output shaft.

TROUBLESHOOTING

Use the table below to help you find the cause of the problem. The numbers indicate the priority of the likely cause of the problem. Check each part in order. If necessary, replace these parts.

See Page / Parts Name / Trouble	–	MT1–2	–	MT1–16	MT1–16	MT1–16	–	MT1–18	MT1–18	MT1–17	MT1–17	MT1–28, 31,40	MT1–31, 40			
	Oil (Level low)	Oil (Wrong)	Oil (Level too high)	Gasket (Damaged)	Oil seal (Worn or damaged)	o–Ring (Worn or damaged)	Control cable (Faulty)	Locking ball spring (Damaged)	Shift fork (Worn)	Gear (Worn or damaged)	Bearing (Worn or damaged)	Synchronizer ring (Worn or damaged)	Shifting key spring (Damaged)			
Noise	1	2								3	3					
Oil leakage			1	2	2	3										
Hard to shift or will not shift							1					2	3			
Jumps out of gear								1	2	3	3					

PRECAUTION

When working with FIPG material, you must observe the following.

- Using a razor blade and gasket scraper, remove all the old FIPG material from the gasket surfaces.
- Thoroughly clean all components to remove all the loose material.
- Clean both sealing surfaces with a non–residue solvent.
- Apply the seal packing in an approx. 1 mm (0.04 in.) wide bead along the sealing surface.
- Part must be assembled within 10 minutes of application. Otherwise, the FIPG material must be removed and reapplied.

PREPARATION

SST (SPECIAL SERVICE TOOLS)

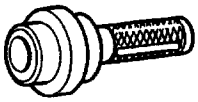	09223–50010	Crankshaft Front oil Seal Replacer	Front bearing retainer oil seal
	09316–60010	Transmission & Transfer Bearing Replacer	Counter rear bearing
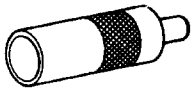	(09316–00010)	Replacer Pipe	
	09325–12010	Transmission Oil Plug	Transfer adaptor oil seal
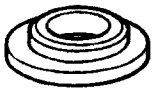	09506–35010	Differential Drive Pinion Rear Bearing Replacer	Output shaft rear bearing 5th gear
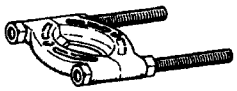	09950–00020	Bearing Remover	
	09950–40010	Puller B Set	
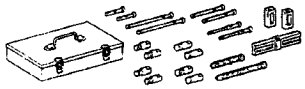	09950–50010	Puller C Set	

RECOMMENDED TOOLS

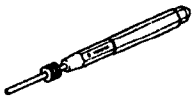	09031–00030	Pin Punch .	
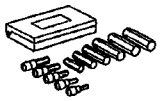	09040–00010	Hexagon Wrench Set.	
	09042–00020	Tom Socket T40.	
	09905–00012	Snap Ring No.1 Expander.	

EQUIPMENT

Calipers	
Dial indicator	
Micrometer	
Torque wrench	
Feeler gauge	
Magnetic finger	

LUBRICANT

Item	Capacity	Classification
Manual transmission oil	3.9 liters (4.1 US qts, 3.4 Imp. qts)	API GL–3, GL–4 or GL–5 SAE 75W–90

SSM (SPECIAL SERVICE MATERIALS)

08826–00090	Seal Packing 1281, THREE BOND 1281 or equivalent (FIPG)	Intermediate plate x Transmission case Intermediate plate x Extension housing
08833–00080	Adhesive 1344, THREE BOND 1344, LOCTITE 242 or equivalent	Straight screw plug for shift fork shaft locking ball Front bearing retainer set bolt

SERVICE SPECIFICATIONS

SERVICE DATA

Output shaft 2nd gear journal diameter	Min	37.984 mm (1.4954 in.)
Output shaft 3rd gear journal diameter	Min	34.984 mm (1.3773 in.)
Output shaft flange thickness	Min	4.80 mm (0.1890 in.)
Output shaft runout	Max	0.05 mm (0.0020 in.)
Inner race flange thickness	Min	3.99 mm (0.1571 in.)
Inner race outer diameter	Min	38.985 mm (1.5348 in.)
Gear thrust clearance 1st	STD	0.10–0.25 mm (0.0039–0.0098 in.)
	Max	0.25 mm (0.0098 in.)
Gear thrust clearance 2nd	STD	0.10–0.25 mm (0.0039–0.0098 in.)
	Max	0.25 mm (0.0098 in.)
Gear thrust clearance 3rd	STD	0.10–0.25 mm (0.0039–0.0098 in.)
	Max	0.25 mm (0.0098 in.)
Gear radial clearance 1st	STD	0.009–0.032 mm (0.0004–0.0013 in.)
	Max	0.032 mm (0.0013 in.)
Gear radial clearance 2nd	STD	0.009–0.032 mm (0.0004–0.0013 in.)
	Max	0.032 mm (0.0013 in.)
Gear radial clearance 3rd	STD	0.009–0.032 mm (0.0004–0.0013 in.)
	Max	0.032 mm (0.0013 in.)
Shift fork to hub sleeve clearance	Max	1.0 mm (0.039 in.)
Synchronizer ring to gear clearance	Min	0.8 mm (0.031 in.)
Input shaft snap ring thickness		
	Mark 0	2.05–2.10 mm (0.0807–0.0827 in.)
	Mark 1	2.10–2.15 mm (0.0827–0.0846 in.)
	Mark 2	2.15–2.20 mm (0.0846–0.0866 in.)
	Mark 3	2.20–2.25 mm (0.0866–0.0886 in.)
	Mark 4	2.25–2.30 mm (0.0886–0.0906 in.)
	Mark 5	2.30–2.35 mm (0.0906–0.0925 in.)
Output shaft snap ring thickness		
Front	Mark C–1	1.75–1.80 mm (0.0689–0.0709 in.)
	Mark D	1.80–1.85 mm (0.0709–0.0728 in.)
	Mark D–1	1.85–1.90 mm (0.0728–0.0748 in.)
	Mark E	1.90–1.95 mm (0.0748–0.0768 in.)
	Mark E–1	1.95–2.00 mm (0.0768–0.0787 in.)
	Mark F	2.00–2.05 mm (0.0787–0.0807 in.)
	Mark F–1	2.05–2.10 mm (0.0807–0.0827 in.)
Rear	Mark A	2.67–2.72 mm (0.1051–0.1071 in.)
	Mark B	2.73–2.78 mm (0.1075–0.1094 in.)
	Mark C	2.79–2.84 mm (0.1098–0.1118 in.)
	Mark D	2.85–2.90 mm (0.1122–0.1142 in.)
	Mark E	2.91–2.96 mm (0.1146–0.1165 in.)
	Mark F	2.97–3.02 mm (0.1169–0.1189 in.)
	Mark G	3.03–3.08 mm (0.1193–0.1213 in.)
	Mark H	3.09–3.14 mm (0.1217–0.1236 in.)
	Mark J	3.15–3.20 mm (0.1240–0.1260 in.)
	Mark K	3.21–3.26 mm (0.1264–0.1283 in.)
	Mark L	3.27–3.32 mm (0.1287–0.1307 in.)

Counter gear needle roller bearing race diameter	STD	25.98–26.00 mm (1.0228–1.0236 in.)
	Min	25.86 mm (1.0181 in.)
Counter 5th gear thrust clearance	STD	0.10–0.30 mm (0.0039–0.0118 in.)
	Max	0.30 mm (0.0118 in.)
Counter 5th gear radial clearance	STD	0.009–0.032 mm (0.0004–0.0013 in.)
	Max	0.032 mm (0.0013 in.)
Reverse idler gear radial clearance	STD	0.04–0.08 mm (0.0016–0.0031 in.)
	Max	0.13 mm (0.0051 in.)
Reverse idler gear to shift arm shoe clearance	STD	0.05–0.27 mm (0.0020–0.0106 in.)
	Max	0.50 mm (0.0197 in.)
Counter gear snap ring thickness		
Front bearing	Mark 1	2.05–2.10 mm (0.0807–0.0827 in.)
	Mark 2	2.10–2.15 mm (0.0827–0.0846 in.)
	Mark 3	2.15–2.20 mm (0.0846–0.0866 in.)
	Mark 4	2.20–2.25 mm (0.0866–0.0886 in.)
	Mark 5	2.25–2.30 mm (0.0886–0.0906 in.)
	Mark 6	2.30–2.35 mm (0.0906–0.0925 in.)
Gear spline piece No.5	Mark A	2.80–2.85 mm (0.110–0.112 in.)
	Mark B	2.85–2.90 mm (0.112–0.114 in.)
	Mark C	2.90–2.95 mm (0.114–0.116 in.)
	Mark D	2.95–3.00 mm (0.116–0.118 in.)
	Mark E	3.00–3.05 mm (0.118–0.120 in.)
	Mark F	3.05–3.10 mm (0.120–0.122 in.)
	Mark G	3.10–3.15 mm (0.122–0.124 in.)
Front bearing retainer oil seal drive in depth		12.2–13.2 mm (0.480–0.520 in.)
Breather hose depth		13 mm (0.51 in.)

TORQUE SPECIFICATIONS

Part tightened		N·m	kgf·cm	ft·lbf
Straight screw plug		19	190	14
Front bearing retainer x Transmission case		17	170	12
Rear bearing retainer x Intermediate plate		18	185	13
Reverse shift arm bracket		18	185	13
Shift fork x Shift fork shaft		20	200	14
Back–up light switch		37	380	27
Reverse idler gear shaft stopper bolt		17	175	13
Clutch housing x Transmission case		37	380	27
Transfer adaptor x Intermediate plate		37	380	27
Shift lever housing bolt		38	390	28
Transfer adaptor plug		37	380	27
Restrict pin		27	280	20
Transmission shift lever control retainer x Transfer adaptor		18	185	13
Transfer shift lever control retainer x Transfer adaptor		18	185	13
Oil receiver x Transfer adaptor		13	130	9
Filler and drain plugs		37	380	27
Propeller shaft upper dust cover set bolt		37	380	27
Propeller shaft upper dust cover x Bracket		23	230	17
Engine rear mounting x Transmission		25	260	19
Dynamic damper set bolt		37	380	27
Transmission x Engine		72	730	53
Stiffener plate x Transmission		37	380	27
Starter x Transmission		39	400	29
Frame crossmember x Body		95	970	70
Engine rear mounting x Crossmember		13	130	9
Stabilizer bracket set bolt		29	300	22
Front exhaust pipe x Exhaust manifold		62	630	46
Exhaust pipe bracket x Clutch housing	Upper Bolt	19	195	14
	Rear Bolt	69	700	51
Exhaust pipe clamp bolt		19	195	14
Clutch line bracket x Starter lower mounting bolt		39	400	29
Clutch release cylinder x Transmission		12	120	9
Propeller shaft dust cover	Bolt A	36	370	27
	Bolt B	23	230	17

TRANSFER ADAPTOR

COMPONENTS

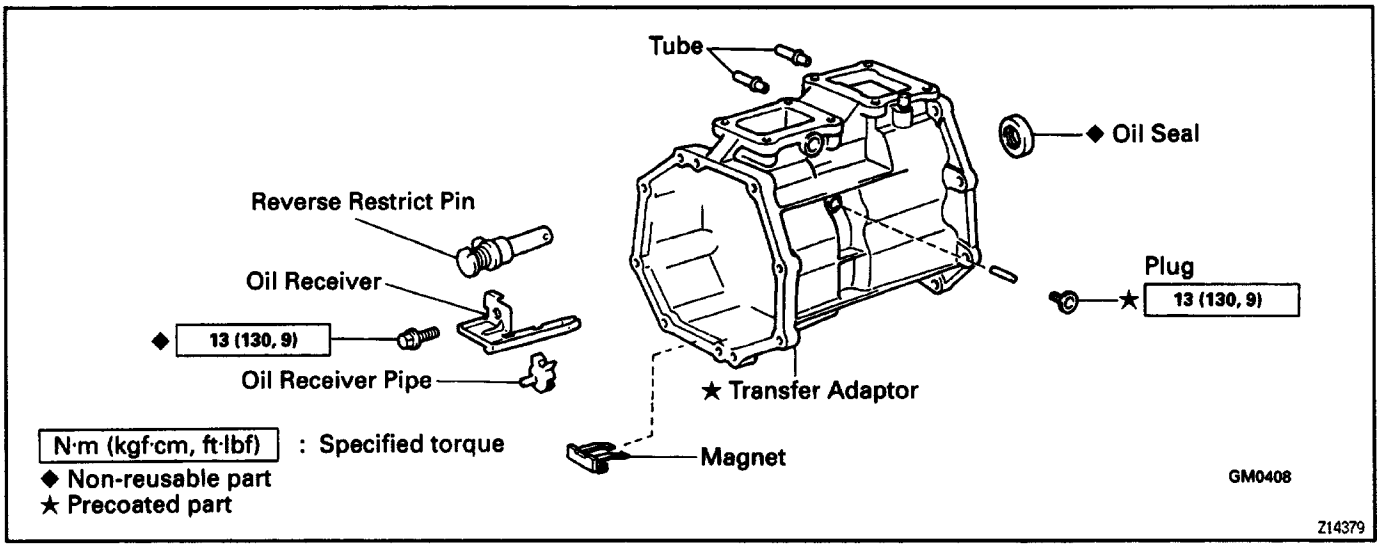

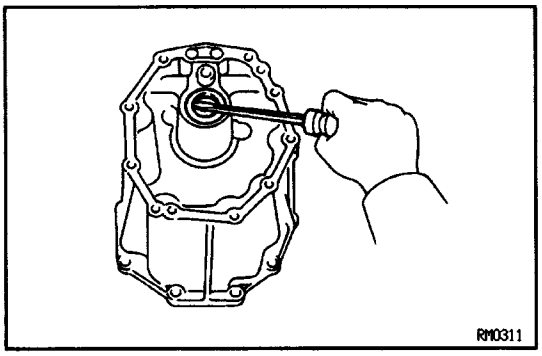

OIL SEAL REPLACEMENT

IF NECESSARY, REPLACE TRANSFER ADAPTOR OIL SEAL

(a) Using a screwdriver, pry out the oil seal.

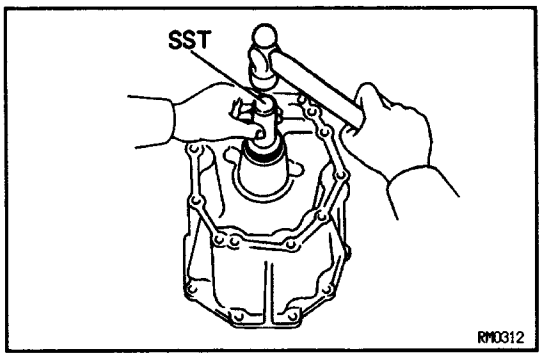

(b) Using SST and a hammer, drive in a new oil seal.
SST 09325–12010

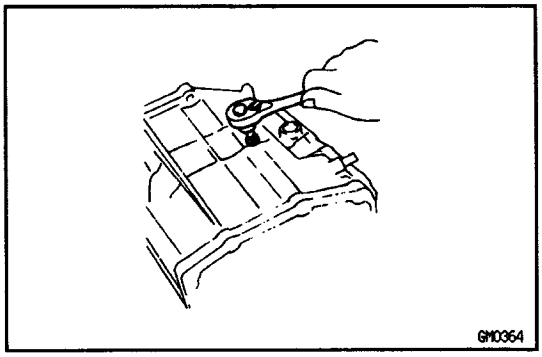

REVERSE RESTRICT PIN INSPECTION AND REPLACEMENT

1. REMOVE REVERSE RESTRICT PIN

(a) Using a torx socket wrench, remove the screw plug.
(Torx socket wrench T40 09042–00020)

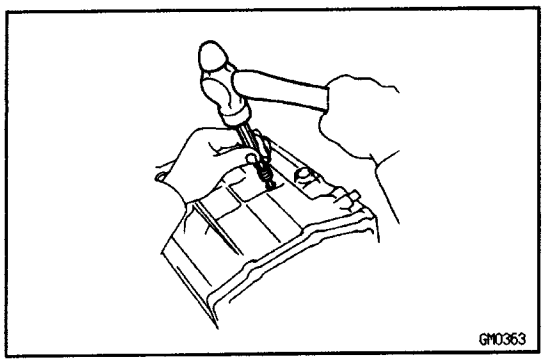

(b) Using a pin punch and hammer, drive out the slotted spring pin.

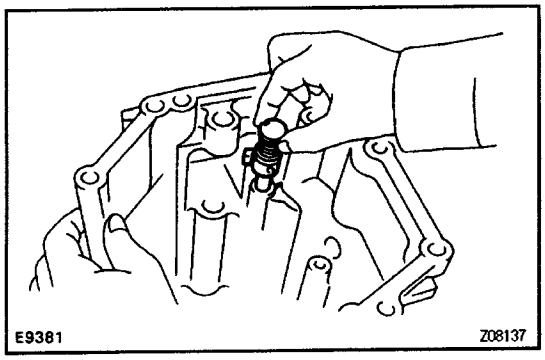

(c) Remove the reverse restrict pin.

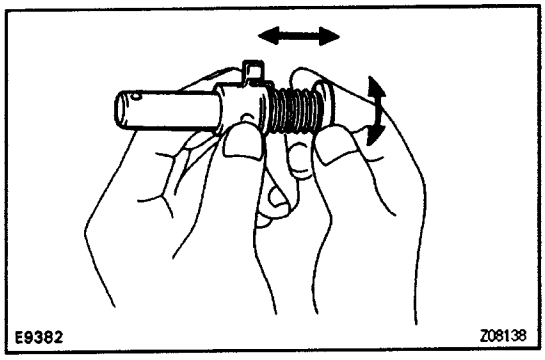

2. INSPECT REVERSE RESTRICT PIN

Turn and push the reverse restrict pin by hand.
Check for smooth operation.

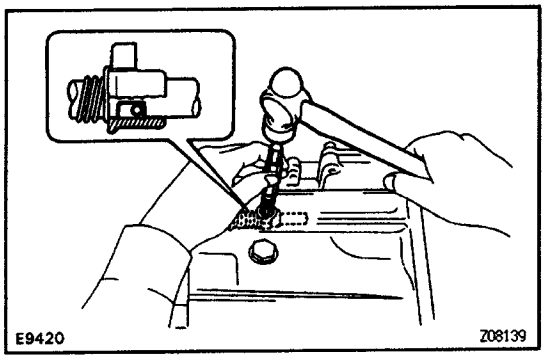

3. INSTALL REVERSE RESTRICT PIN

(a) Install the reverse restrict pin to the transfer adaptor.
(b) Using a pin punch and hammer, drive in the slotted spring pin, as shown.

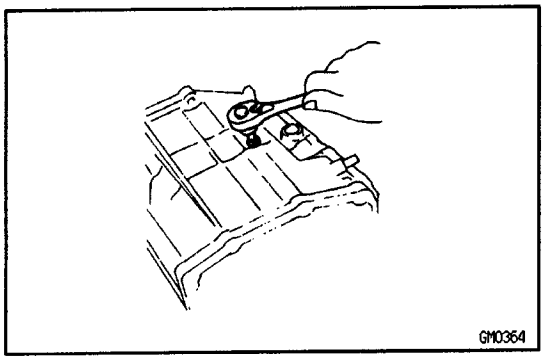

(c) Apply sealant to the plug threads.
Sealant: Part No.08833–00080, THREE BOND 1344, LOCTITE 242 or equivalent
(d) Using a torx socket wrench, install and torque the screw plug.
(Torx socket wrench T40 09042–00020)
Torque: 19 N–m (190 kgf–cm, 14 ft–lbf)

TROUBLESHOOTING

Use the table below to help you find the cause of the problem. The numbers indicate the priority of the likely cause of the problem. Check each part in order. If necessary, replace these parts.

See Page / Parts Name / Trouble	–	MT1–2	–	MT1–16	MT1–16	MT1–16	–	MT1–18	MT1–18	MT1–17	MT1–17	MT1–28, 31,40	MT1–31, 40			
	Oil (Level low)	Oil (Wrong)	Oil (Level too high)	Gasket (Damaged)	Oil seal (Worn or damaged)	o–Ring (Worn or damaged)	Control cable (Faulty)	Locking ball spring (Damaged)	Shift fork (Worn)	Gear (Worn or damaged)	Bearing (Worn or damaged)	Synchronizer ring (Worn or damaged)	Shifting key spring (Damaged)			
Noise	1	2								3	3					
Oil leakage			1	2	2	3										
Hard to shift or will not shift							1					2	3			
Jumps out of gear								1	2	3	3					

PRECAUTION

When working with FIPG material, you must observe the following.

- Using a razor blade and gasket scraper, remove all the old FIPG material from the gasket surfaces.
- Thoroughly clean all components to remove all the loose material.
- Clean both sealing surfaces with a non–residue solvent.
- Apply the seal packing in an approx. 1 mm (0.04 in.) wide bead along the sealing surface.
- Part must be assembled within 10 minutes of application. Otherwise, the FIPG material must be removed and reapplied.

ASSEMBLY REMOVAL AND INSTALLATION

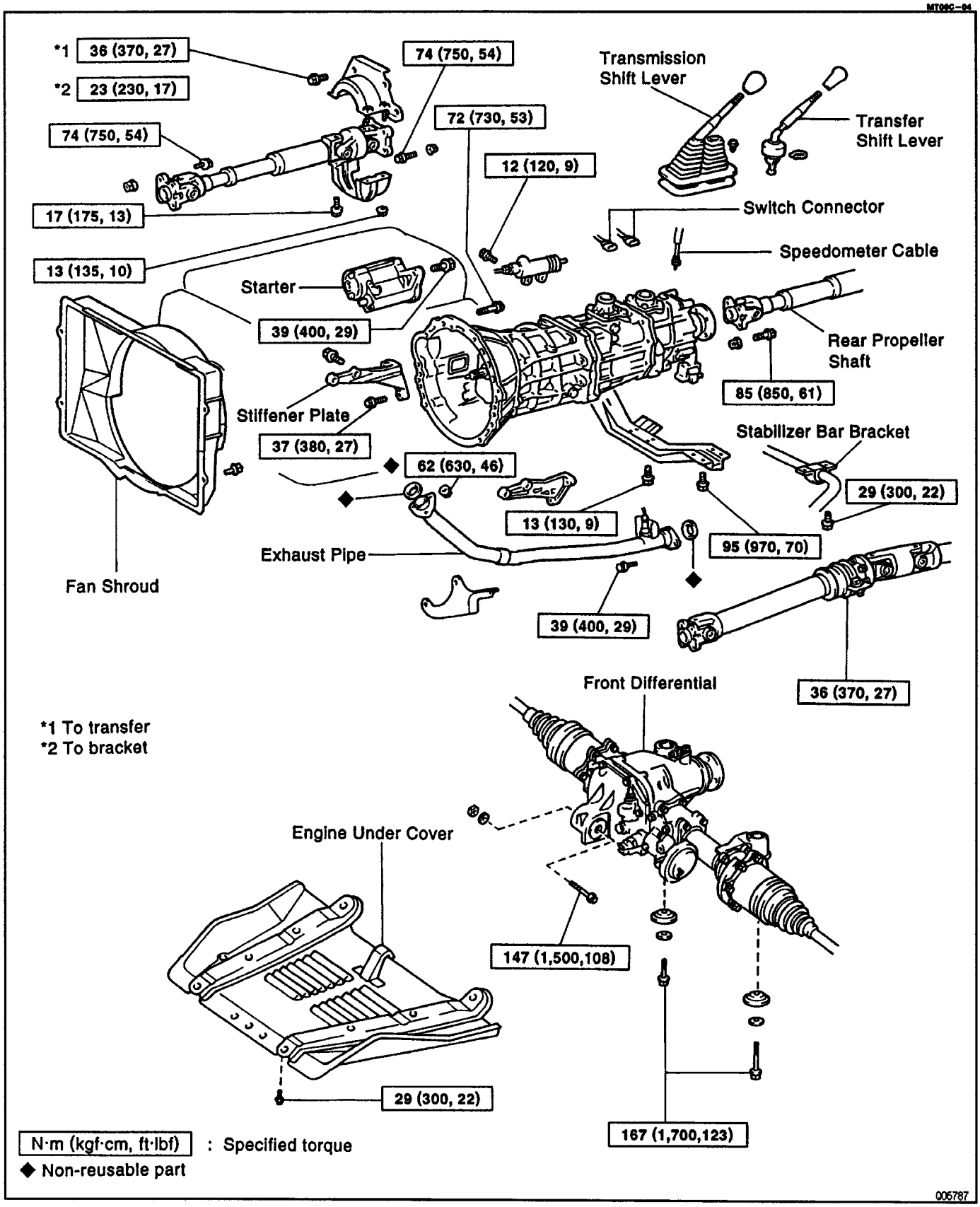

TRANSMISSION REMOVAL

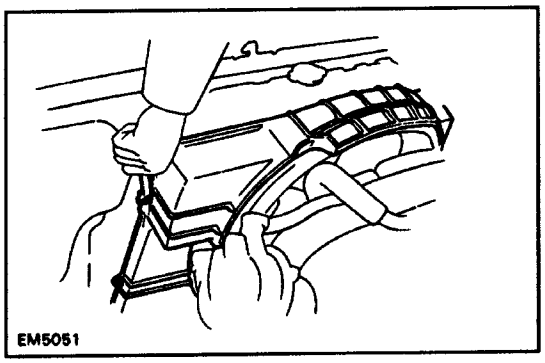

1. DISCONNECT NEGATIVE(–) TERMINAL CABLE FROM BATTERY

2. REMOVE FAN SHROUD SET BOLTS

Remove the 4 bolts.

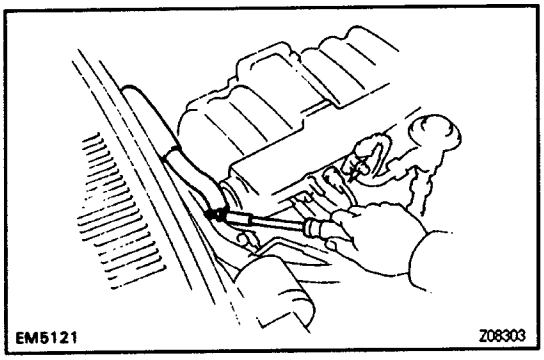

3. REMOVE HEATER HOSE CLAMP

(a) Loosen the clamp bolt.

(b) Move the clamp upside.

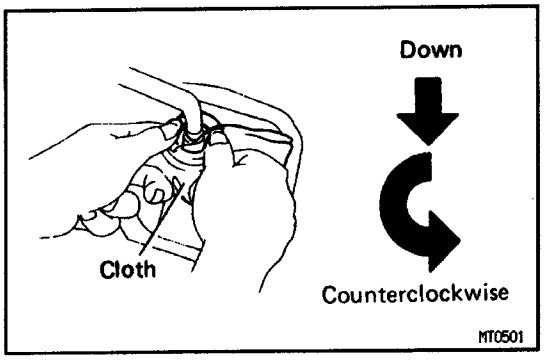

4. REMOVE TRANSMISSION SHIFT LEVER FROM INSIDE OF VEHICLE

(a) Remove the 4 screws and shift lever boot retainer.

(b) Pull up the shift lever boot.

(c) Cover the shift lever cap with a cloth.

(d) Then, pressing down on the shift lever cap, rotate it counterclockwise to remove.

(e) Remove the shift lever.

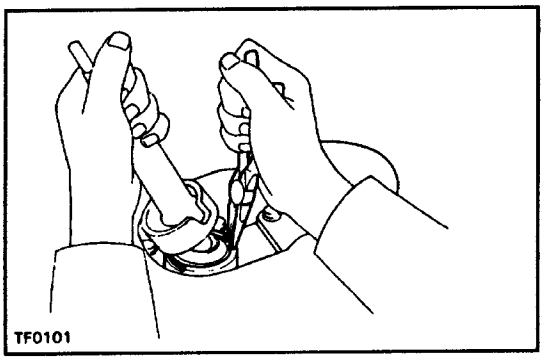

5. REMOVE TRANSFER SHIFT LEVER FROM INSIDE OF VEHICLE

Using pliers, remove the snap ring and pull out the shift lever from the transfer.

6. RAISE VEHICLE AND DRAIN TRANSMISSION AND TRANSFER OIL

NOTICE: Be sure the vehicle is securely supported.

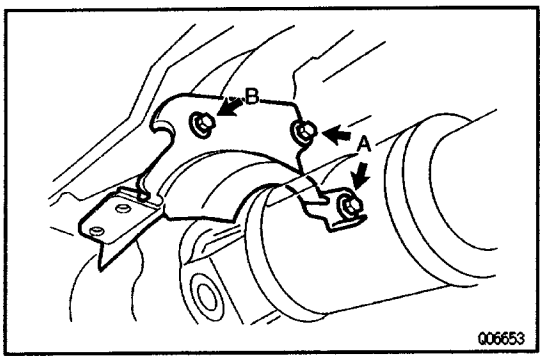

7. REMOVE PROPELLER SHAFT DUST COVER SUB–ASSEMBLY

Remove the 3 bolts and cover.

8. DISCONNECT FRONT AND REAR PROPELLER SHAFT
(See page PR–7)

9. DISCONNECT, SPEEDOMETER CABLE, BACK–UP LIGHT SWITCH CONNECTOR AND TRANSFER INDICATOR SWITCH CONNECTOR

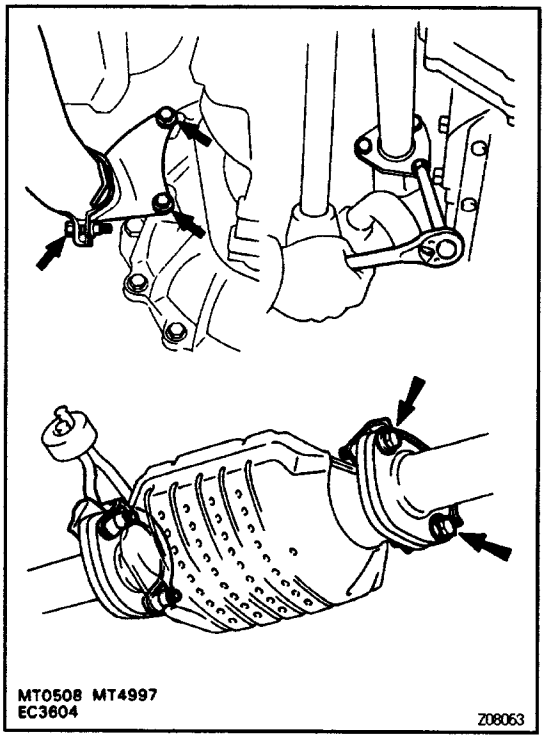

10. REMOVE EXHAUST PIPE, BRACKET AND CLAMP
(a) Remove the exhaust pipe clamp.
(b) Remove the 2 bolts and exhaust pipe bracket from the clutch housing.
(c) Remove the 3 nuts, exhaust pipe and gasket from the exhaust manifold.
(d) Remove the 2 bolts and gasket, disconnect the exhaust pipe from the catalytic converter front side.

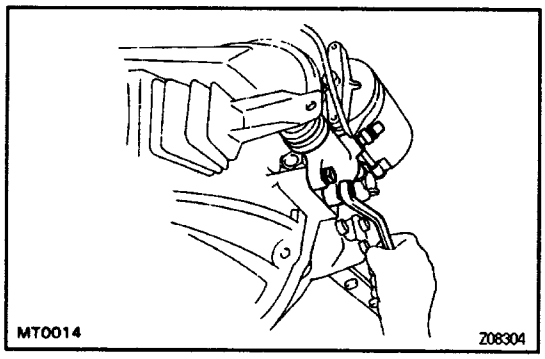

11. REMOVE CLUTCH RELEASE CYLINDER
Remove the 2 bolts and lay the release cylinder alongside the engine.
HINT: Do not disconnect the clutch line.

12. REMOVE FRONT DIFFERENTIAL SET BOLTS
(a) Remove the 3 bolts.
(b) Support the front differential.

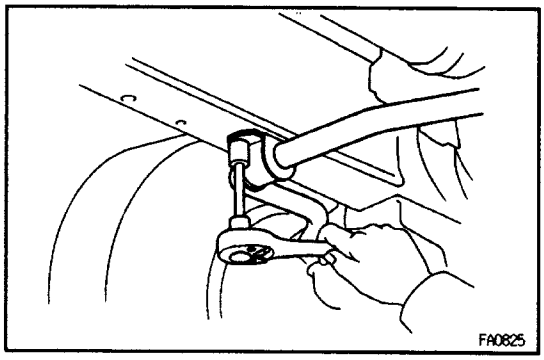

13. REMOVE STABILIZER BAR BRACKET SET BOLTS
Remove the 4 bolts.

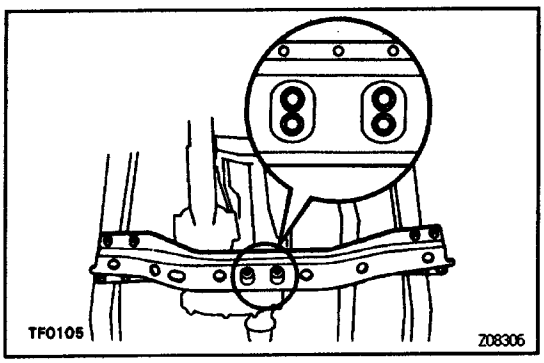

14. REMOVE NO. 2 FRAME CROSSMEMBER FROM SIDE FRAME

(a) Remove the 4 bolts from the engine rear mounting.
(b) Using a transmission jack, support the transmission.
(c) Remove the 8 bolts and No. 2 frame crossmember from the side frame.

15. LOWER TRANSMISSION WITH TRANSFER

16. REMOVE STARTER

(a) Remove the 2 bolts and starter.
(b) Lay the starter alongside the engine.

17. REMOVE EXHAUST PIPE BRACKET AND STIFFENER PLATE BOLTS

18. REMOVE REMAINING TRANSMISSION BOLTS

19. REMOVE TRANSMISSION WITH TRANSFER

Remove the transmission with the transfer toward the rear of the vehicle.

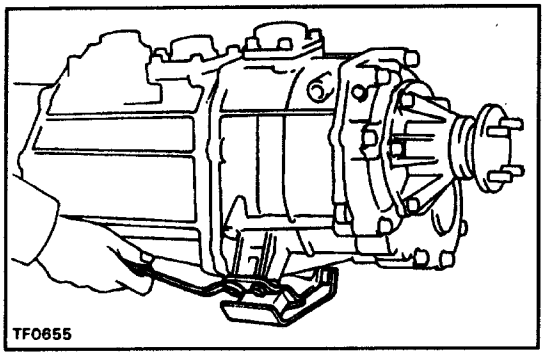

20. REMOVE ENGINE REAR MOUNTING

Remove the 4 bolts and engine rear mounting from the transfer.

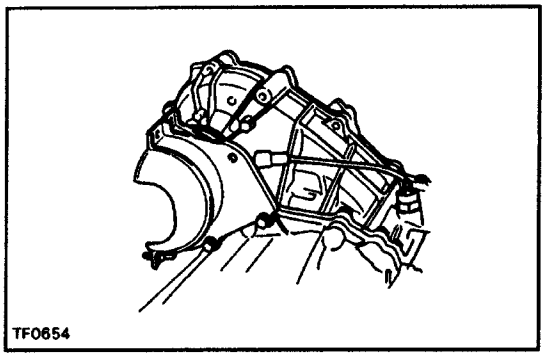

21. REMOVE PROPELLER SHAFT UPPER DUST COVER AND TRANSFER FROM TRANSMISSION

(a) Remove the dust cover bolt from the bracket.
(b) Remove the transfer adaptor rear mounting bolts.

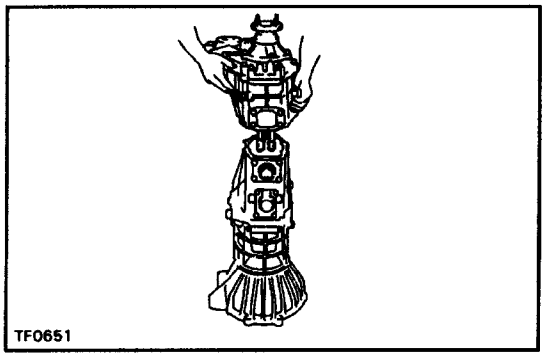

(c) Pull the transfer straight up and remove it from the transmission.

HINT: Take care not to damage the adaptor rear oil seal with the transfer input gear spline.

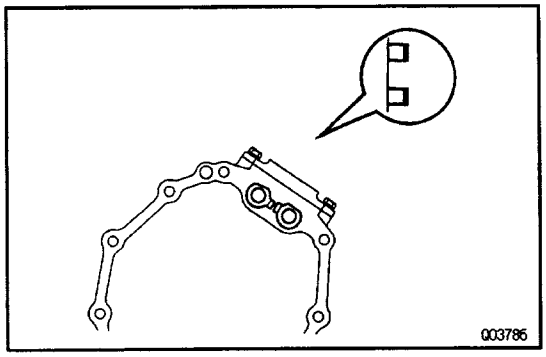

TRANSMISSION INSTALLATION

1. INSTALL TRANSFER AND PROPELLER SHAFT UPPER DUST COVER TO TRANSMISSION WITH NEW GASKET

(a) Shift the 2 shift fork shafts to the high–4 position.

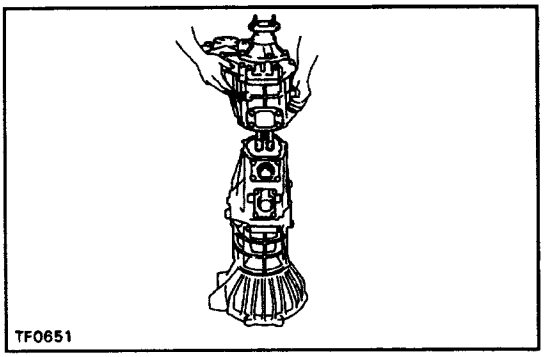

(b) Apply MP grease to the adaptor oil seal.
(c) Place a new gasket to the transfer adaptor.
(d) Install the transfer to the transmission.
HINT: Take care not to damage the oil seal by the input gear spline when installing the transfer.

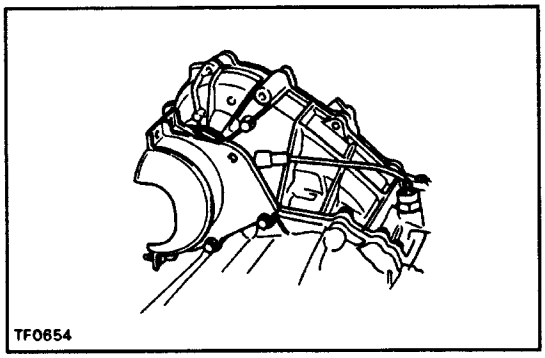

(e) Install and torque the bolts with the propeller shaft upper dust cover.
Torque: 37 N–m (380 kgf–cm, 27 ft–lbf)

(f) Install the dust cover bolt to the bracket.
Torque: 23 N–m (230 kgf–cm, 17 ft–lbf)

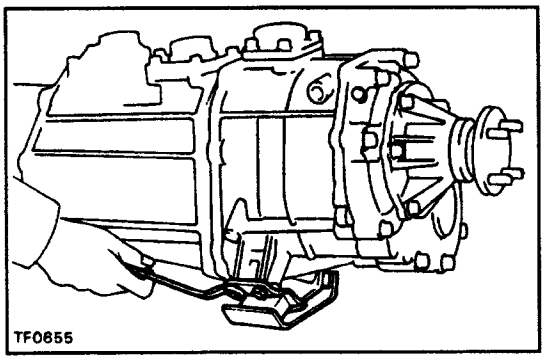

2. INSTALL ENGINE REAR MOUNTING

Install the engine rear mounting and torque the 4 bolts.
Torque: 25 N–m (260 kgf–cm, 19 ft–lbf)

3. PLACE TRANSMISSION WITH TRANSFER AT IN–STALLATION POSITION

(a) Support the transmission with a jack.

(b) Align the input shaft spline with the clutch disc, and push the transmission with the transfer fully into position.

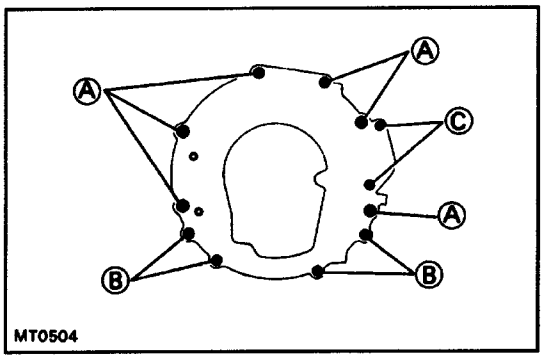

4. INSTALL TRANSMISSION, STIFFENER AND STA–RTER BOLTS

Torque:

(A) Transmission bolt:

72 N–m (730 kgf–cm, 53 ft–lbf)

(B) Stiffener plate bolt:

37 N–m (380 kgf–cm, 27 ft–lbf)

(C) Starter bolt:

39 N–m (400 kgf–cm, 29 ft–lbf)

5. INSTALL NO. 2 FRAME CROSSMEMBER

(a) Raise the transmission slightly with a jack.

(b) Install the No. 2 frame crossmember to the side frame and torque the 8 bolts.

Torque: 95 N–m (970 kgf–cm, 70 ft–lbf)

(c) Lower the transmission and transfer.

(d) Install the 4 mounting bolts to the engine rear mount–ing. Torque the bolts.

Torque: 13 N–m (130 kgf–cm, 9 ft–lbf)

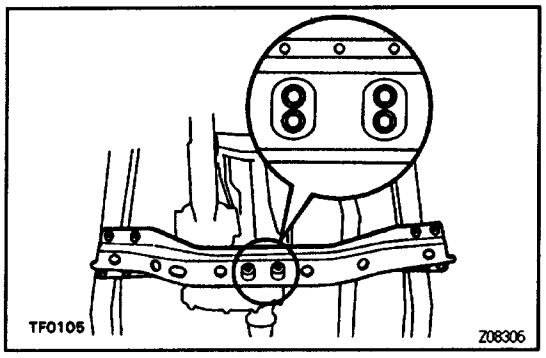

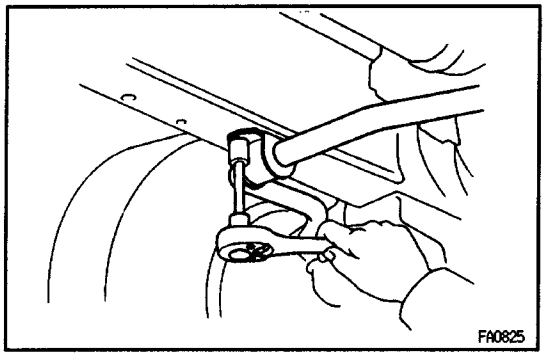

6. INSTALL STABILIZER BAR BRACKET SET BOLTS

Install and torque the 4 bolts.

Torque: 29 N–m (300 kgf–cm, 22 ft–lbf)

7. INSTALL FRONT DIFFERENTIAL ASSEMBLY

Install and torque the 3 bolts.

Torque:

Differential carrier cover to frame:

147 N–m (1,500 kgf–cm, 108 ft–lbf)

Others:

167 N–m (1,700 kgf–cm, 123 ft–lbf)

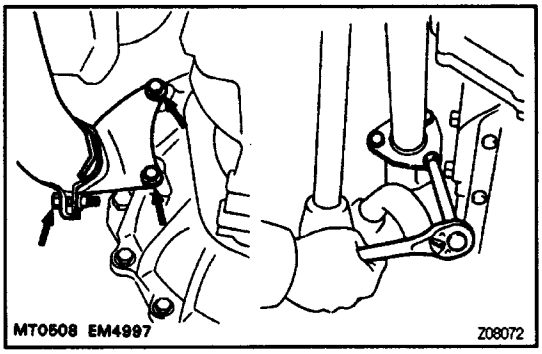

8. INSTALL EXHAUST PIPE, BRACKET AND CLAMP

(a) Install a new gasket and the exhaust pipe to the manifold. Torque 3 new nuts.

Torque: 62 N–m (630 kgf–cm, 46 ft–lbf)

(b) Install the exhaust pipe bracket to the clutch housing and torque the 2 bolts.

Torque: 39 N–m (400 kgf–cm, 29 ft–lbf)

(c) Install the exhaust pipe clamp.

Torque: 19 N–m (195 kgf–cm, 14 ft–lbf)

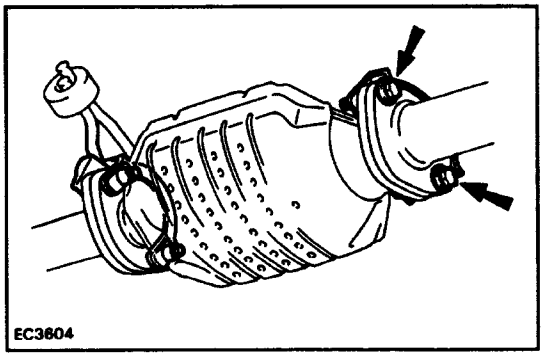

(d) Install the exhaust pipe and a new gasket to the catalytic converter front side. Torque the 2 bolts.

Torque: 39 N–m (400 kgf–cm, 29 ft–lbf)

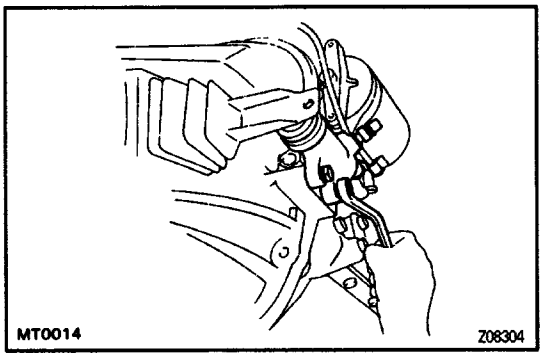

9. INSTALL CLUTCH RELEASE CYLINDER

Install the clutch release cylinder and torque the 2 bolts.

Torque: 12 N–m (20 kgf–cm, 9 ft–lbf)

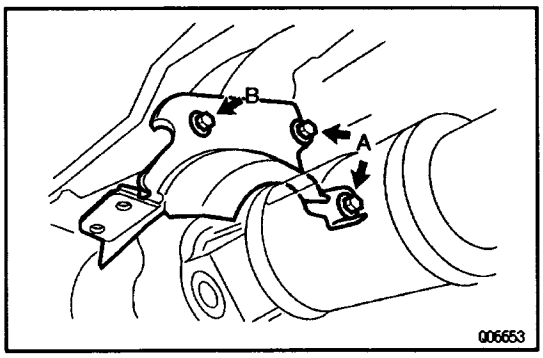

10. INSTALL PROPELLER SHAFT DUST COVER SUB–ASSEMBLY

(a) Install the cover.

(b) Install and torque the 3 bolts.

Torque:

Bolt A: 36 N–m (370 kgf–cm, 27 ft–lbf)

Bolt B: 23 N–m (230 kgf–cm, 17 ft–lbf)

11. CONNECT SPEEDOMETER CABLE, BACK – UP LIGHT SWITCH CONNECTOR AND TRANSFER INDICATOR SWITCH CONNECTOR

12. CONNECT FRONT AND REAR PROPELLER SHAFT

(See page PR–16**)**

13. FILL TRANSMISSION WITH GEAR OIL

Oil grade:

API GL–3, GL–4 or GL–5

Viscosity:

SAE 75W–90

Capacity:

2.2 liters (2.3 US qts, 1.9 Imp. qts)

14. LOWER VEHICLE

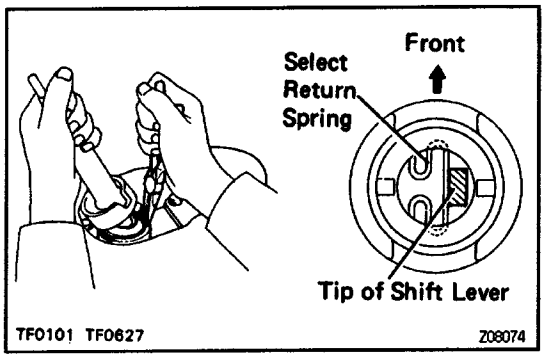

15. INSTALL TRANSFER SHIFT LEVER

(a) Apply MP grease to the transfer shift lever.
(b) Install the shift lever, as shown.
(c) Using pliers, install the snap ring.

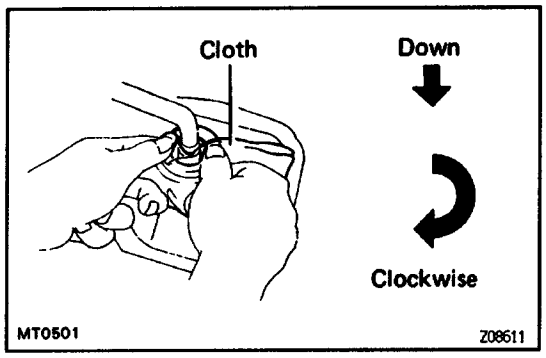

16. INSTALL TRANSMISSION SHIFT LEVER

(a) Apply MP grease to the transmission shift lever.
(b) Align the groove of the shift lever cap and the pin part of the case cover.
(c) Cover the shift lever cap with a cloth.
(d) Then, pressing down on the shift lever cap, rotate it clockwise to install.

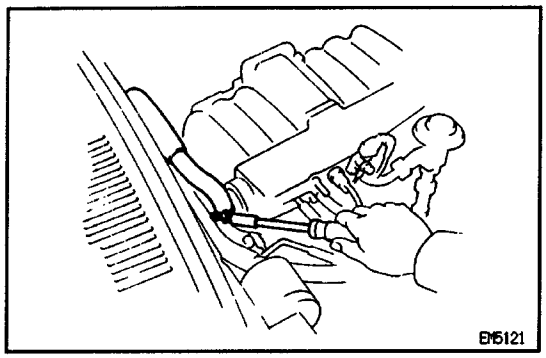

17. INSTALL HEATER HOSE CLAMP

(a) Move the clamp to correct position.
(b) Torque the clamp bolt.

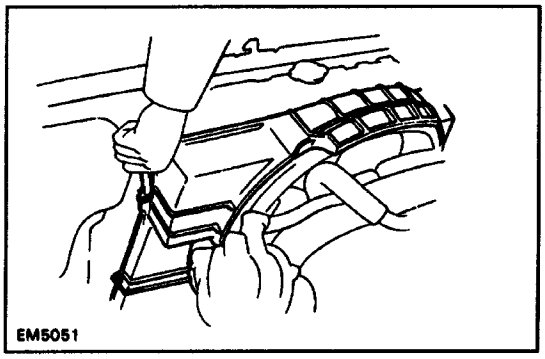

18. INSTALL FAN SHROUD SET BOLTS

Install and torque the 4 bolts.

19. CONNECT NEGATIVE (–) TERMINAL CABLE TO BATTERY

20. PERFORM ROAD TEST

Check for abnormal noises and smooth shifting.

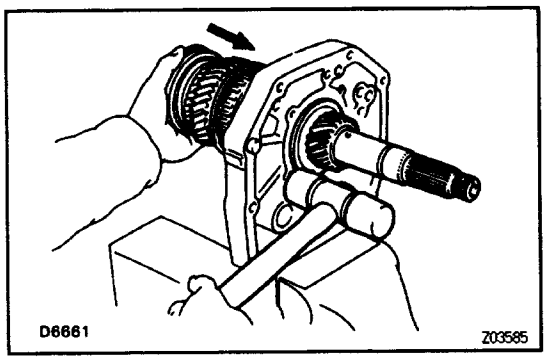

COMPONENT PARTS INSTALLATION

BASIC SUBASSEMBLY REASSEMBLY

(See pages MT2–16 and MT2–17)

1. INSTALL OUTPUT SHAFT TO INTERMEDIATE PLATE

(a) Install the output shaft into the intermediate plate by pushing on the output shaft and tapping on the intermediate plate.

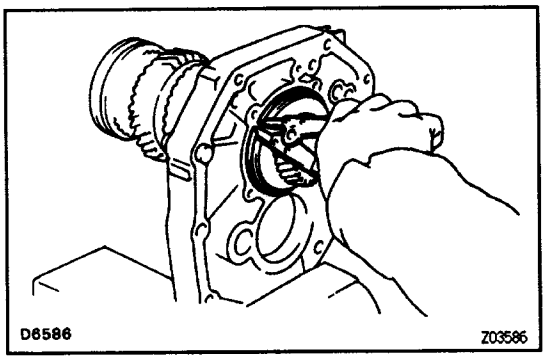

(b) Using a snap ring expander, install the snap ring.

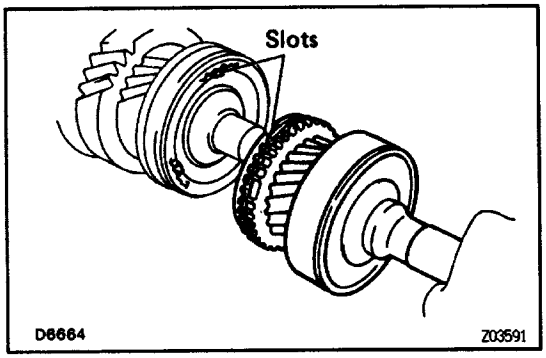

2. INSTALL INPUT SHAFT

(a) Apply gear oil to the needle roller bearing and install it into the input shaft.

(b) Install the input shaft to the output shaft with the synchronizer ring slots aligned with the shifting keys.

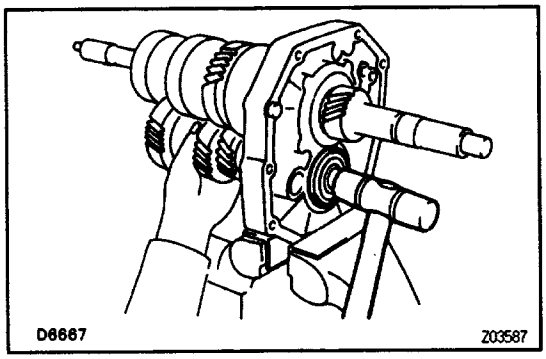

3. INSTALL COUNTER GEAR

Install the counter gear into the intermediate plate while holding the counter gear, and install a new counter rear bearing with a plastic hammer.

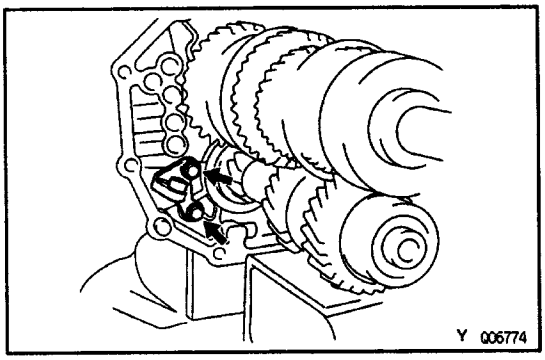

4. INSTALL REVERSE SHIFT ARM BRACKET

Install the reverse shift arm bracket and torque the 2 bolts.

Torque: 18 N–m (185 kgf–cm, 13 ft–lbf)

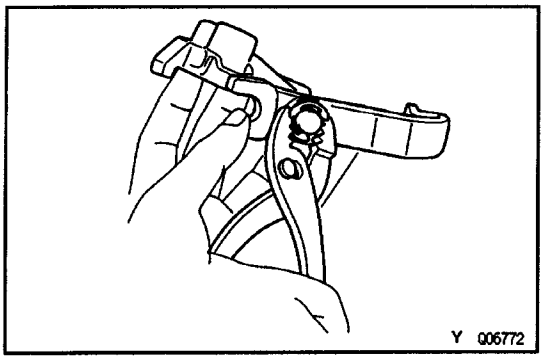

5. INSTALL REVERSE SHIFT FORK AND ARM

(a) Connect the reverse shift fork and arm with the E–ring.

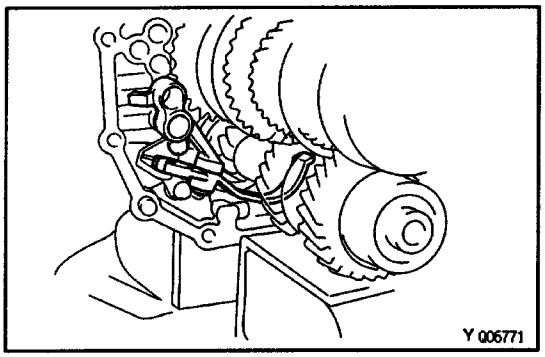

(b) Install the reverse shift arm to the pivot of the reverse shift arm bracket.

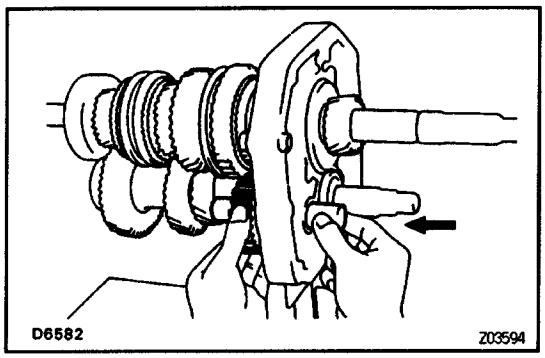

6. INSTALL REVERSE IDLER GEAR AND SHAFT

Align the reverse shift arm to the reverse idler gear groove and install the reverse idler gear shaft to the intermediate plate.

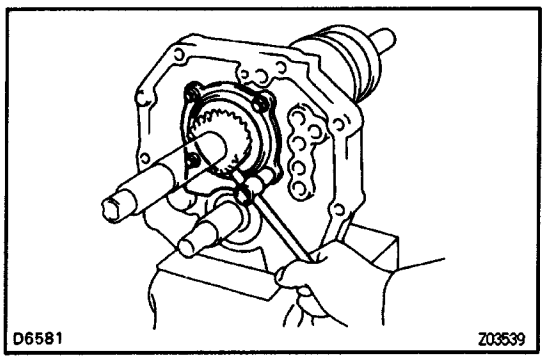

7. INSTALL REAR BEARING RETAINER

(a) Align the rear bearing retainer to the reverse idler gear shaft groove.

(b) Install and torque the 4 bolts.

Torque: 18 N–m (185 kgf–cm, 13 ft–lbf)

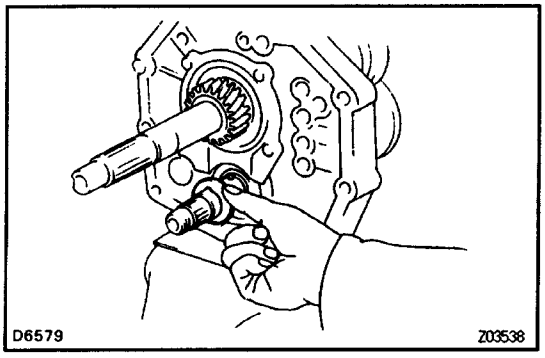

8. INSTALL STRAIGHT PIN AND THRUST WASHER

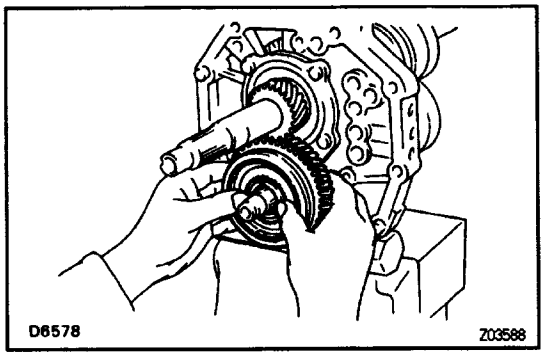

9. INSTALL COUNTER 5TH GEAR WITH HUB SLEEVE NO.3 ASSEMBLY AND NEEDLE ROLLER BEARINGS

(a) Apply gear oil to the needle roller bearings.

(b) Install the counter 5th gear with the hub sleeve No.3 and needle roller bearings.

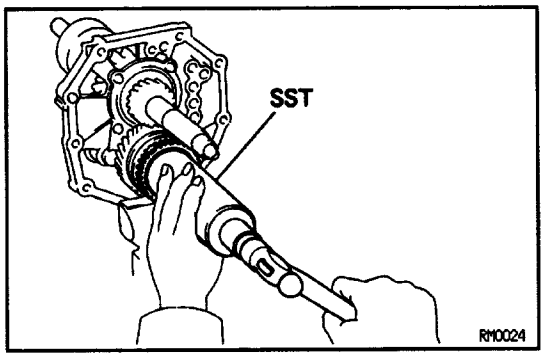

10. INSTALL SYNCHRONIZER RING AND GEAR SPLINE PIECE NO–5

(a) Install the synchronizer ring on the gear spline piece No.5.

(b) Using SST and a hammer, drive in the gear spline piece No.5 with the synchronizer ring slots aligned with the shifting keys.

SST 09316 –60010 (09316 –00010)

HINT: When installing the gear spline piece No.5, support the counter gear in front with a 3–5 Ib hammer or equivalent.

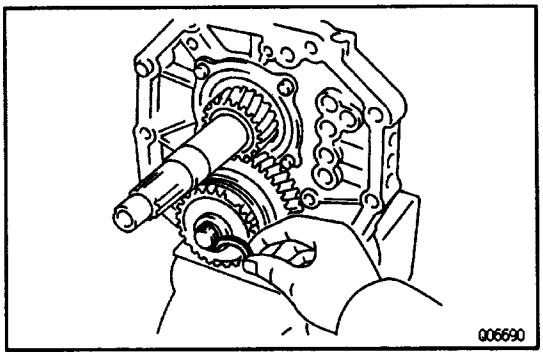

11. INSTALL SNAP RING

(a) Select a snap ring that will allow minimum axial play.

Mark	Thickness mm (in.)
A	2.80 – 2.85 (0.1102 – 0.1122)
B	2.85 – 2.90 (0.1122 – 0.1142)
C	2.90 – 2.95 (0.1142 – 0.1161)
D	2.95 – 3.00 (0.1161 – 0.1181)
E	3.00 – 3.05 (0.1181 – 0.1201)
F	3.05 – 3.10 (0.1201 – 0.1220)
G	3.10 – 3.15 (0.1220 – 0.1240)

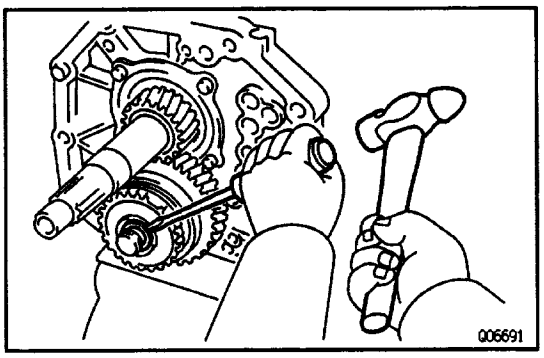

(b) Using a screwdriver and hammer, install the snap ring.

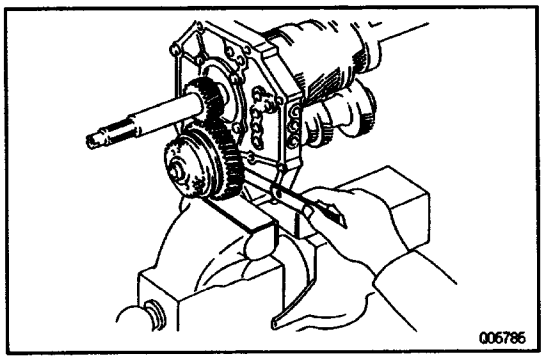

12. INSPECT COUNTER 5TH GEAR THRUST CLEARANCE

Using a feeler gauge, measure the counter 5th gear thrust clearance.

Standard clearance:

0.10 – 0.35 mm (0.0039 – 0.0138 in.)

Maximum clearance:

0.40 mm (0.0157 in.)

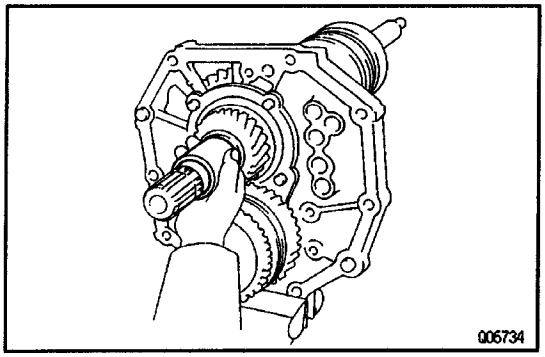

13. INSTALL SPACER

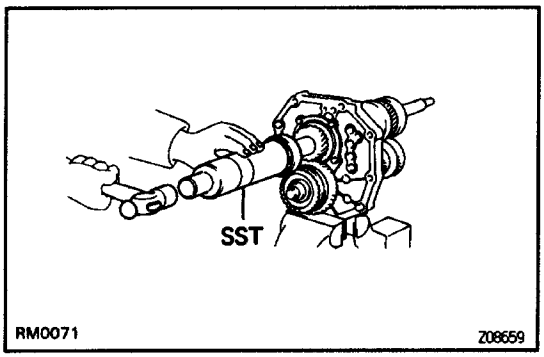

14. INSTALL OUTPUT SHAFT REAR BEARING

Using SST and a hammer, drive in, a new rear bearing.
SST 09316–60010 (09316–00010, 09316–00070)

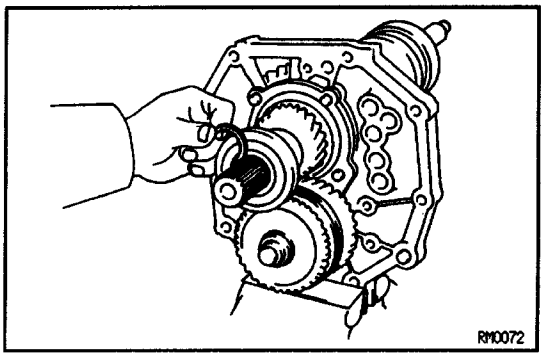

15. INSTALL SNAP RING

(a) Select a snap ring that will allow minimum axial play.

Mark	Thickness mm (in.)
A	2.65 – 2.70 (0.1043 – 0.1063)
B	2.70 – 2.75 (0.1063 – 0.1083)
C	2.75 – 2.80 (0.1083 – 0.1102)
D	2.80 – 2.85 (0.1102 – 0.1122)
E	2.85 – 2.90 (0.1122 – 0.1142)
F	2.90 – 2.95 (0.1142 – 0.1161)
G	2.95 – 3.00 (0.1161 – 0.1181)
H	3.00 – 3.05 (0.1181 – 0.1201)
J	3.05 – 3.10 (0.1201 – 0.1220)
K	3.10 – 3.15 (0.1220 – 0.1240)
L	3.15 – 3.20 (0.1240 – 0.1260)
M	3.20 – 3.25 (0.1260 – 0.1280)
N	3.25 – 3.30 (0.1280 – 0.1299)
P	3.30 – 3.35 (0.1299 – 0.1319)
Q	3.35 – 3.40 (0.1319 – 0.1339)
R	3.40 – 3.45 (0.1339 – 0.1358)
S	3.45 – 3.50 (0.1358 – 0.1378)

(b) Using a screwdriver and hammer, install the snap ring.

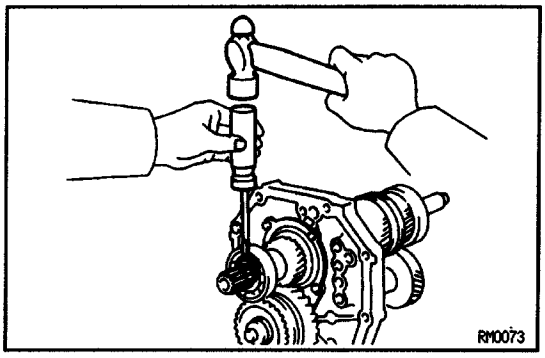

16. INSTALL SLEEVE TO OUTPUT SHAFT

Using a plastic hammer, drive in the sleeve onto the output shaft.

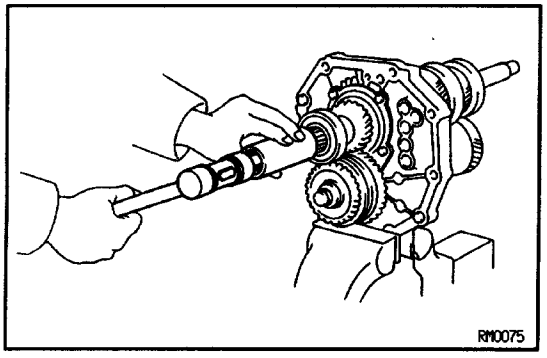

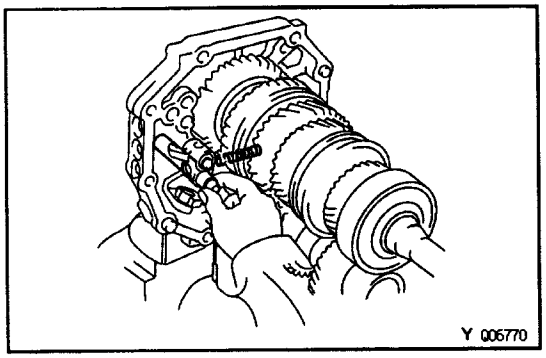

17. INSTALL SHIFT FORK SHAFT NO.4

(a) Using a magnetic finger, install the spring to the reverse shift fork.

(b) While pushing the ball to the spring side, install the shift fork shaft No.4 to the reverse shift fork through the intermediate plate.

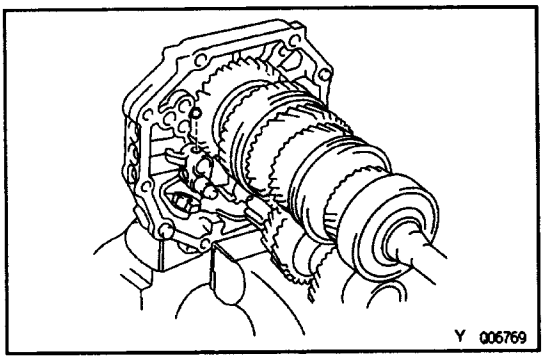

(c) Using a magnetic finger, install the ball.

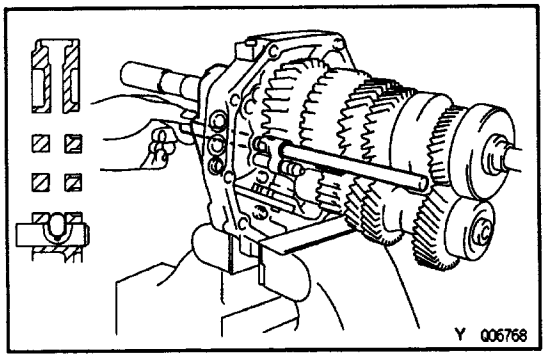

18. INSTALL SHIFT FORK SHAFT NO.3 AND SHIFT FORK NO.3

(a) Using a magnetic finger and screwdriver, install the interlock pin into the intermediate plate.

(b) Place the shift fork No.3 into the groove of hub sleeve No.3.

(c) Install the shift fork shaft No.3 to the shift fork No.3 and reverse shift fork through the intermediate plate.

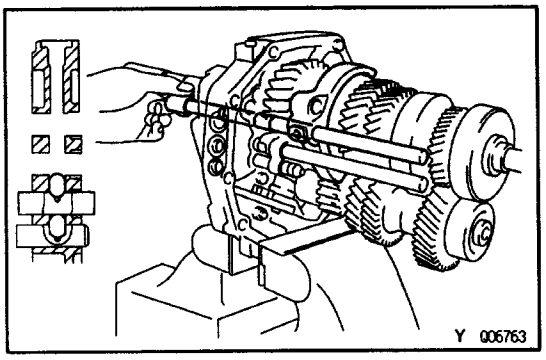

19. INSTALL SHIFT FORK SHAFT NO.1 AND SHIFt FORK NO.1

(a) Using a magnetic finger and screwdriver, install the interlock pin into the intermediate plate.

(b) Place the shift fork No.1 into the groove of reverse gear.

(c) Install the straight pin into the shift fork shaft No.1 hole.

(d) Install the shift fork shaft No.1 to the shift fork No.1 through the intermediate plate.

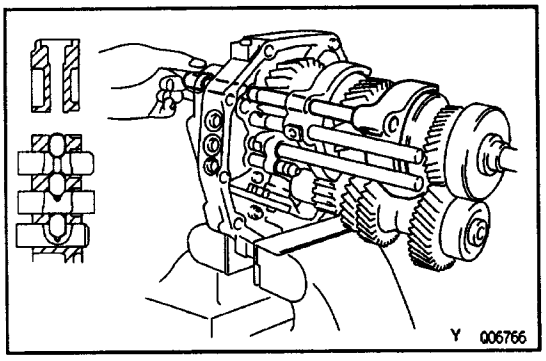

20. INSTALL SHIFT FORK SHAFT NO.2 AND SHIFT FORK NO.2

(a) Using a magnetic finger and screwdriver, install the interlock pin into the intermediate plate.

(b) Place the shift fork No.2 into the groove of hub sleeve No.2.

(c) Install the shift fork shaft No.2 to the shift fork No.', and No.1 through the intermediate plate.

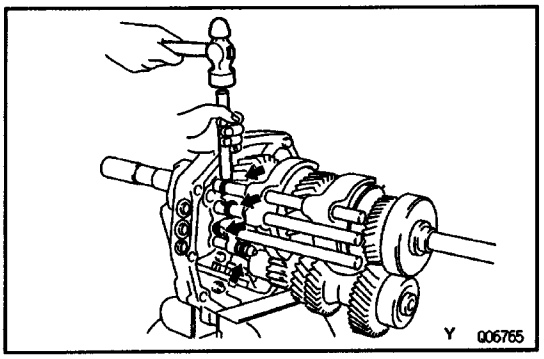

21. INSTALL SNAP RINGS

Using a brass bar and hammer, drive in the 4 snap rings.

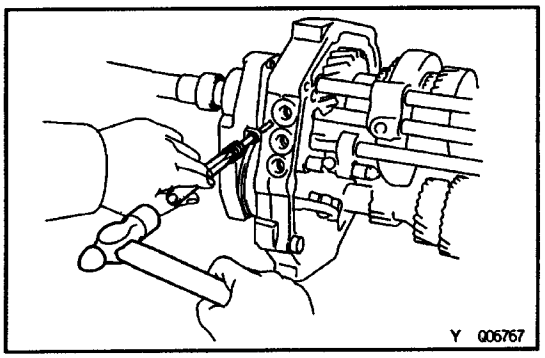

22. INSTALL SLOTTED SPRING PIN

Using a pin punch and hammer, drive in the slotted spring pin.

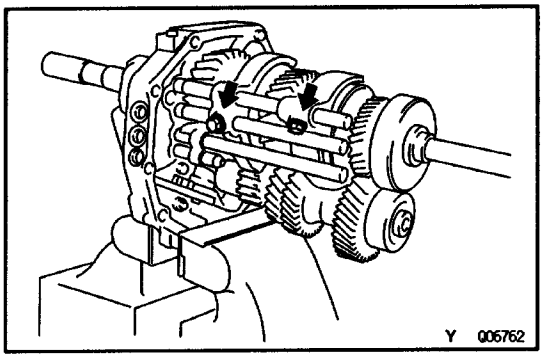

23. INSTALL SHIFT FORKS SET BOLTS

Install and torque the 2 bolts.

Torque: 20 N–m (200 kgf–cm, 14 ft–lbf)

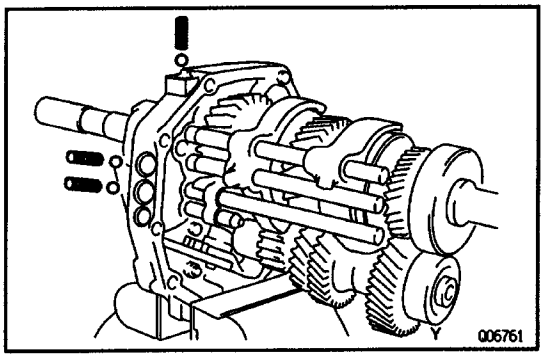

24. INSTALL LOCKING BALLS, SPRINGS AND STRAI–GHT SCREW PLUGS

(a) Apply sealant to the plug threads.

Sealant: Part No. 08833–00080, THREE BOND 1344, LOCTITE 242 or equivalent

(b) Using a magnetic finger, install the 3 locking balls and springs.

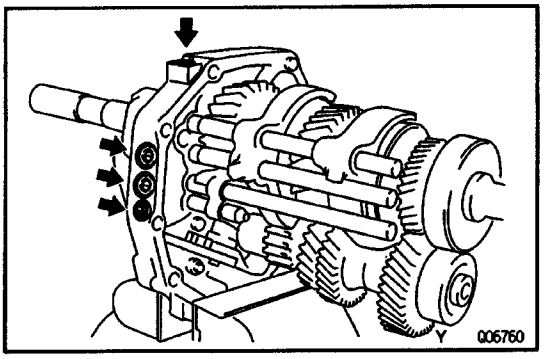

(c) Using a hexagon wrench, torque the 4 screw plugs.

Torque: 19 N–m (190 kgf–cm, 14 ft–lbf)

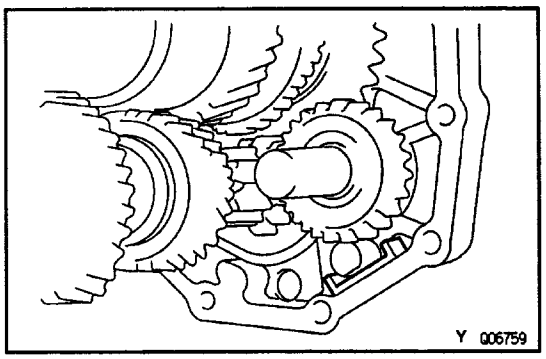

26. INSTALL MAGNET TO INTERMEDIATE PLATE

26. DISMOUNT INTERMEDIATE PLATE FROM VISE

(a) Dismount the intermediate plate from the vise.

(b) Remove the bolts, nuts and plate washers.

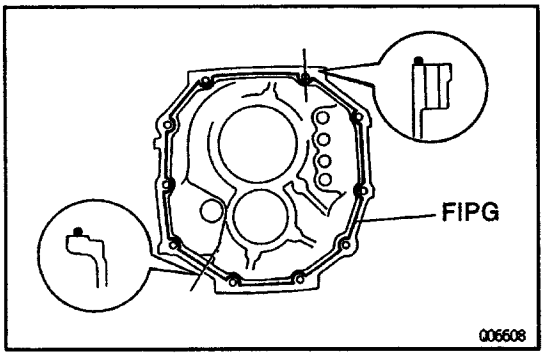

27. INSTALL TRANSMISSION CASE

(a) Remove any FIPG material and be careful not to drop oil on the contacting surfaces of the intermediate plate or transmission case.

(b) Apply FIPG to the transmission case, as shown.

FIPG:

Part No. 08826–00090, THREE BOND 1281 or equivalent

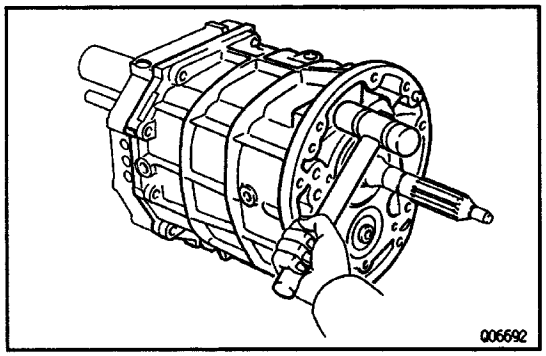

(c) Align the 2 bearing outer race, 3 fork shaft end and reverse idler gear shaft end with the case installation holes, and install the case.

If necessary, tap on the case with a plastic hammer.

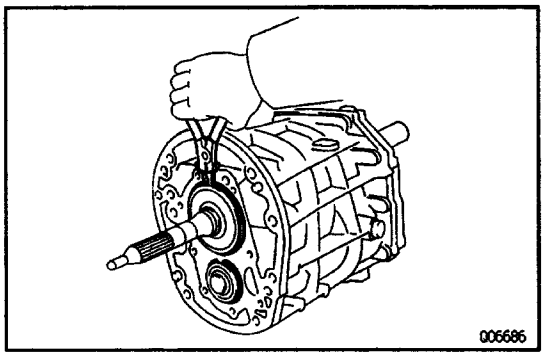

28. INSTALL BEARING SNAP RINGS

Using a snap ring expander, install the 2 snap rings to the input shaft bearing and counter gear front bearing.

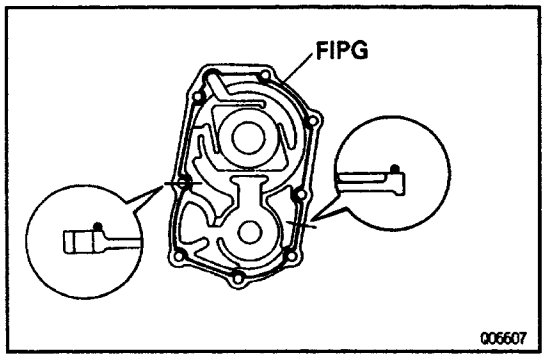

29. INSTALL FRONT BEARING RETAINER

(a) Remove any FIPG material and be careful not to drop oil on the contacting surfaces of the front bearing retainer or transmission case.

(b) Apply FIPG to the retainer, as shown.

FIPG:

Part No. 08826–00090, THREE BOND 1281 or equivalent

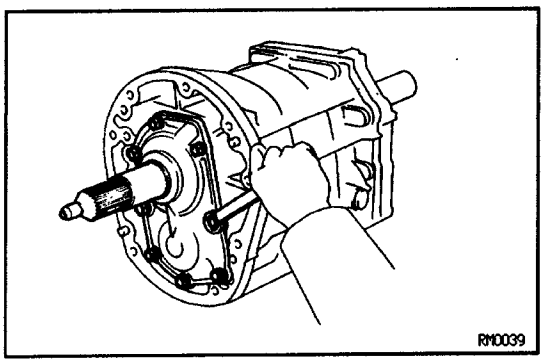

(c) Apply sealant to the bolt threads.
Sealant: Part No. 08833–00080, THREE BOND 1344, LOCTITE 242 or equivalent
(d) Install and torque the 8 bolts.
Torque: 17 N–m (170 kgf–cm, 12 ft–lbf)

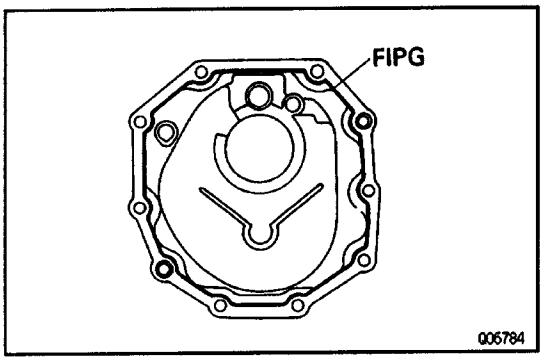

30. INSTALL TRANSFER ADAPTOR, SHIFT LEVER SHAFT AND SHIFT LEVER HOUSING
(a) Remove the any F1PG material and be careful not to drop oil on the contacting surfaces of the transfer adaptor or transmission case.
(b) Apply FIPG to the transfer adaptor, as shown.
FIPG:
Part No. 08826–00090. THREE BOND 1281 or equivalent

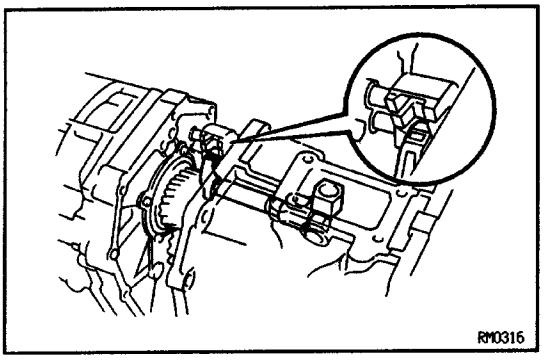

(c) Install the shift and select lever into the transfer adaptor
(d) Connect the shift and select lever to the fork shaft and put in the shift lever housing.

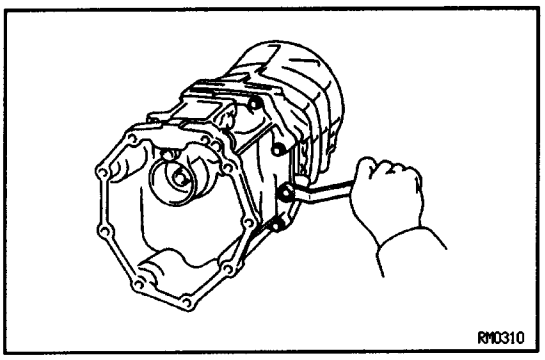

(e) Install and torque the 10 bolts.
Torque: 37 N–m (380 kgf–cm, 27 ft–lbf)

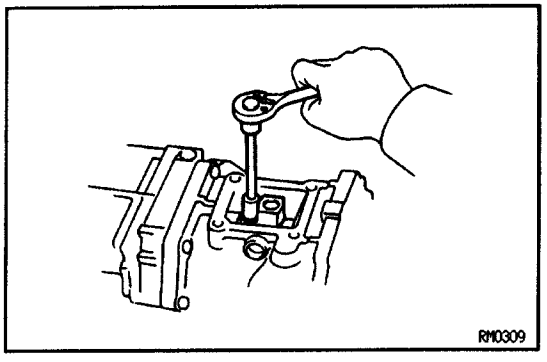

(f) Install and torque the shift lever housing set bolt.
Torque: 38 N–m (390 kgf–cm, 28 ft–lbf)
(g) Apply sealant to the plug threads.
Sealant: Part No. 08833–00080. THREE BOND 1344, LOCTITE 242 or equivalent

31. AFTER INSTALLING TRANSFER ADAPTOR CHECK FOLLOWING ITEMS

(a) Check to see that the input and output shafts rotate smoothly.

(b) Check to the that shifting can be made smoothly to all positions.

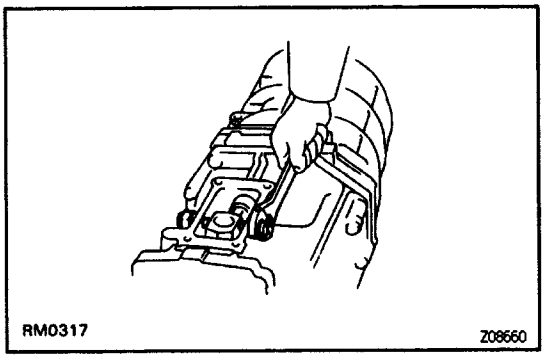

32. INSTALL RESTRICT PINS

(a) Install the black pin on the reverse gear/5th gear side.

(b) Install another pin and torque the pins.

Torque: 37 N–m (380 kgf–cm, 27 ft–lbf)

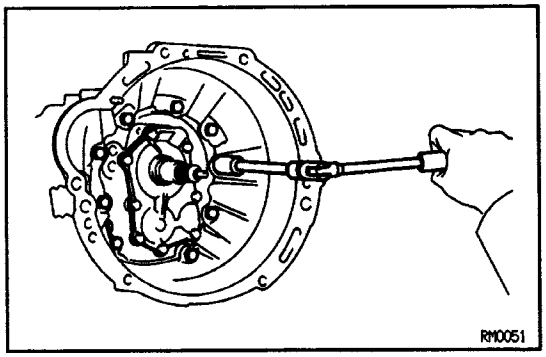

33. INSTALL CLUTCH HOUSING

(a) Install the clutch housing.

(b) Install and torque the 9 bolts.

Torque: 36 N–m (370 kgf–cm, 27 ft–lbf)

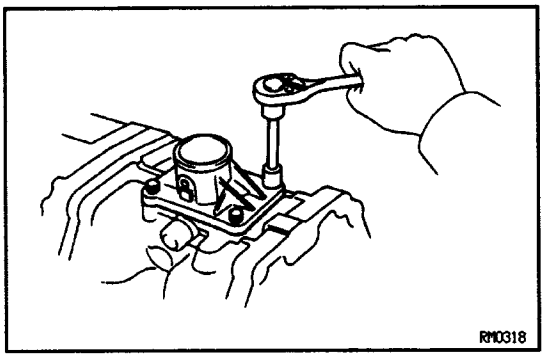

34. INSTALL SHIFT LEVER RETAINER

(a) Apply sealant to the bolt threads.

Sealant: Part No. 08833–00080, THREE BOND 1344, LOCTITE 242 or equivalent

(b) Install the shift lever retainer with the oil deflector and torque the 4 bolts.

Torque: 18 N–m (185 kgf–cm, 13 ft–lbf)

35. INSTALL BACK–UP LIGHT SWITCH

Torque: 44 N–m (450 kgf–cm, 32 ft–lbf)

36. INSTALL RELEASE FORK AND BEARING

Apply molybdenum disulphide lithium base grease (See page CL–18).

COMPONENT PARTS REMOVAL

COMPONENTS

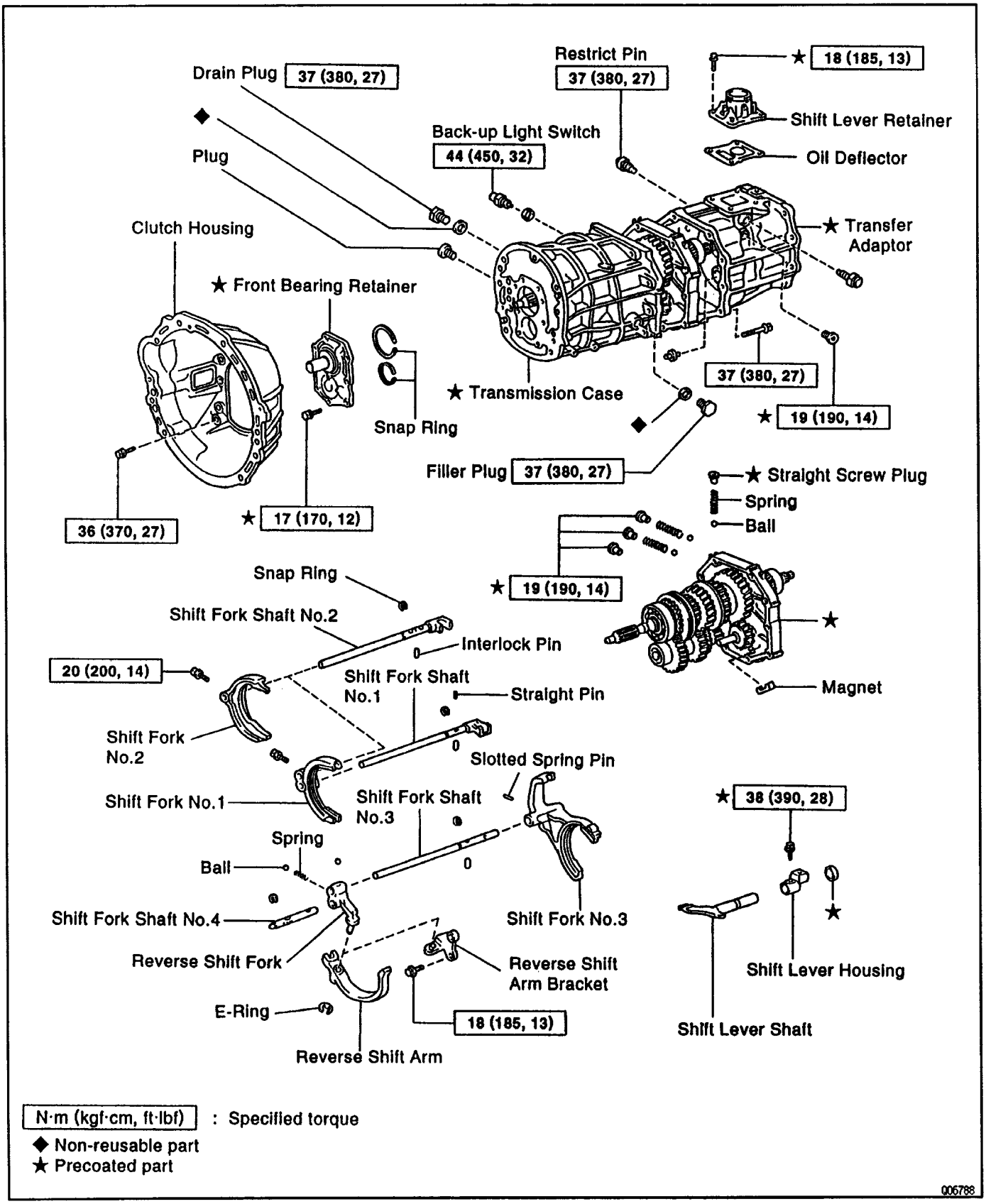

N·m (kgf·cm, ft·lbf) : Specified torque
◆ Non-reusable part
★ Precoated part

006788

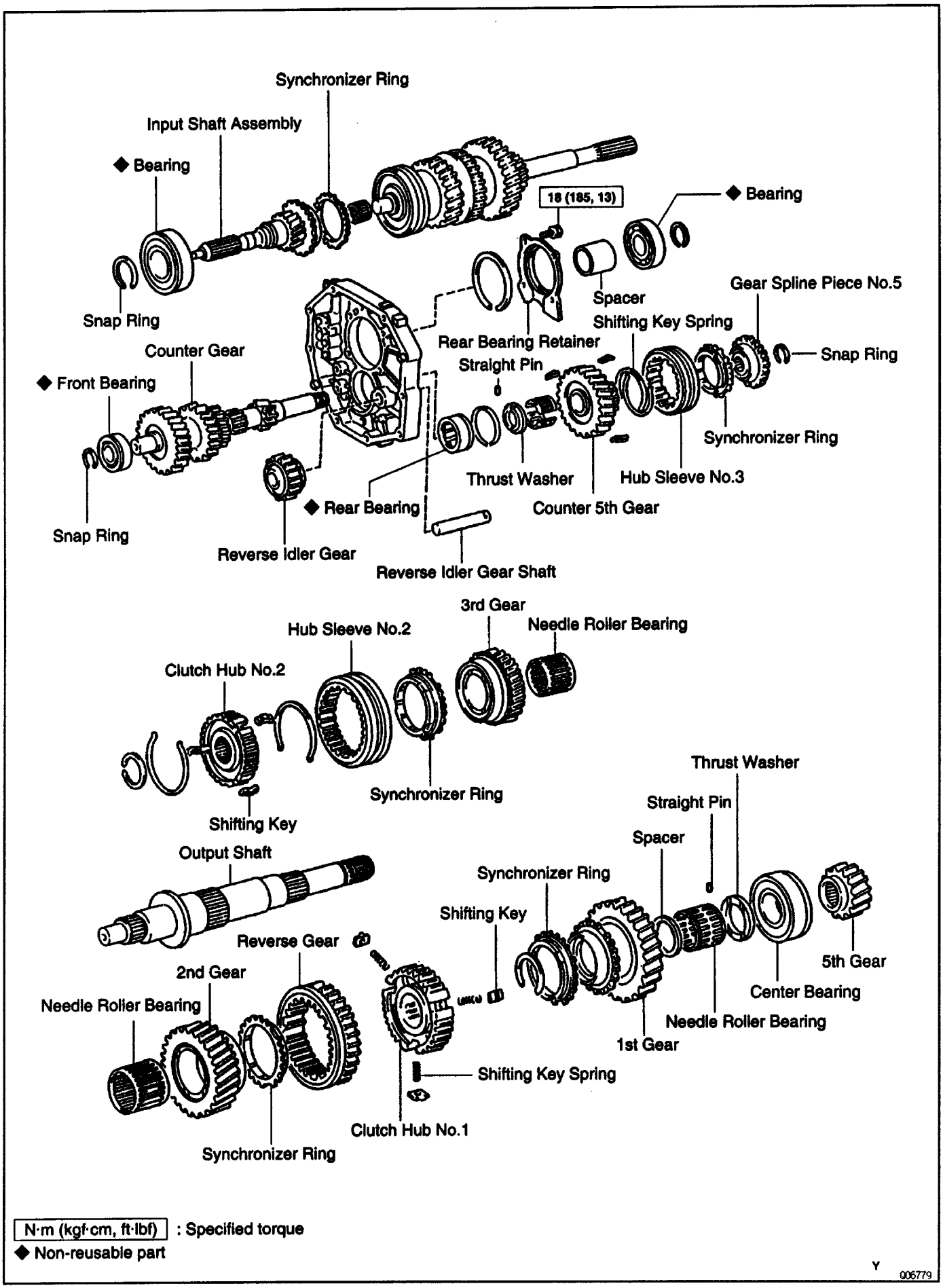
Synchronizer Ring
Input Shaft Assembly
◆ Bearing
18 (185, 13)
◆ Bearing
Snap Ring
Spacer
Gear Spline Piece No.5
Shifting Key Spring
Rear Bearing Retainer
Counter Gear
Straight Pin
Snap Ring
◆ Front Bearing
Synchronizer Ring
Thrust Washer
Hub Sleeve No.3
Counter 5th Gear
◆ Rear Bearing
Snap Ring
Reverse Idler Gear
Reverse Idler Gear Shaft
3rd Gear
Needle Roller Bearing
Hub Sleeve No.2
Clutch Hub No.2
Synchronizer Ring
Shifting Key
Thrust Washer
Straight Pin
Spacer
Output Shaft
Synchronizer Ring
Shifting Key
Reverse Gear
5th Gear
2nd Gear
Center Bearing
Needle Roller Bearing
Needle Roller Bearing
1st Gear
Shifting Key Spring
Clutch Hub No.1
Synchronizer Ring
N·m (kgf·cm, ft·lbf) : Specified torque
◆ Non-reusable part
Y
006779

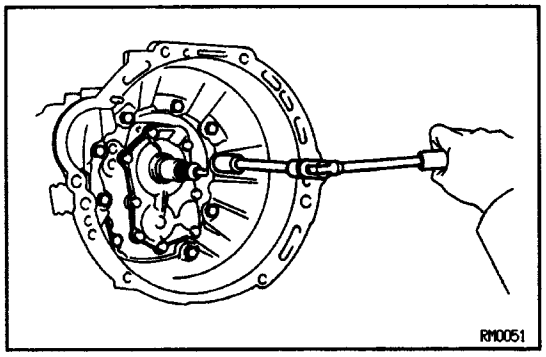

BASIC SUBASSEMBLY SEPARATION

(See pages MT2–16 and MT2–17)

1. REMOVE RELEASE FORK AND BEARING

2. REMOVE BACK–UP LIGHT SWITCH, SHIFT LEVER RETAINER AND RESTRICT PINS

3. REMOVE CLUTCH HOUSING FROM TRANSMISSION CASE

Remove the 9 bolts and clutch housing.

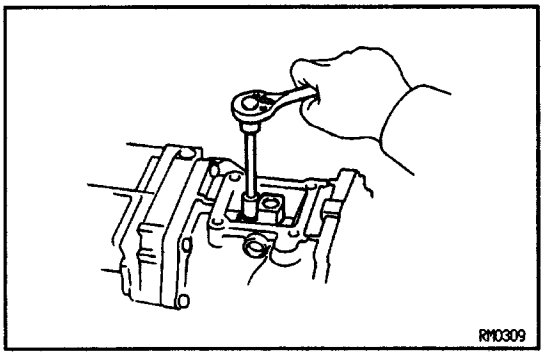

4. REMOVE TRANSFER ADAPTOR

(a) Remove the shift lever housing set bolt.

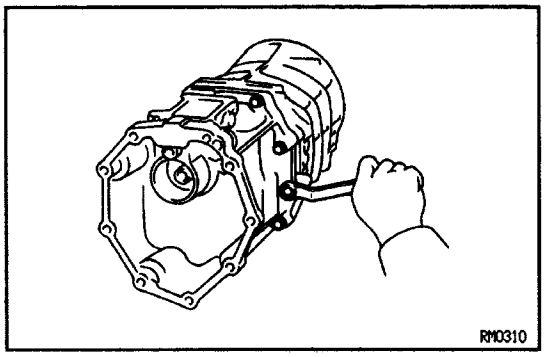

(b) Remove the 10 bolts.

(c) Using a plastic hammer, tap the transfer adaptor and remove the shift lever housing and shift and select lever.

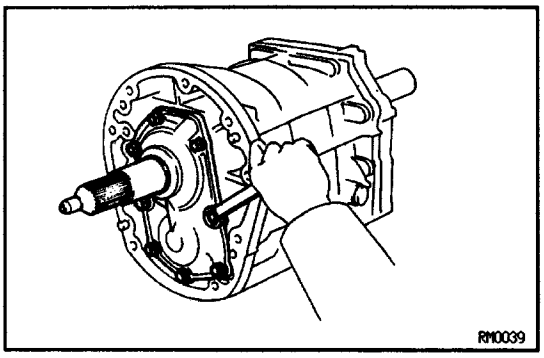

6. REMOVE FRONT BEARING RETAINER

(a) Remove the 8 bolts.

(b) Using a plastic hammer, tap the front bearing retainer.

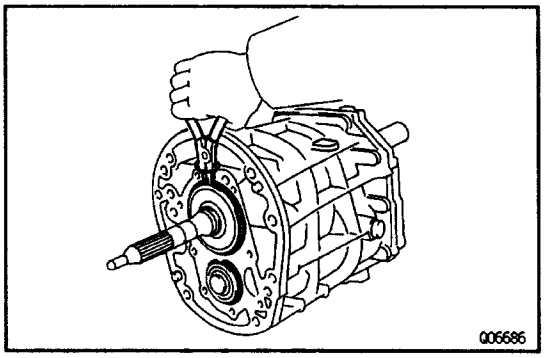

6. REMOVE BEARING SNAP RINGS

Using a snap ring expander, remove the 2 snap rings.

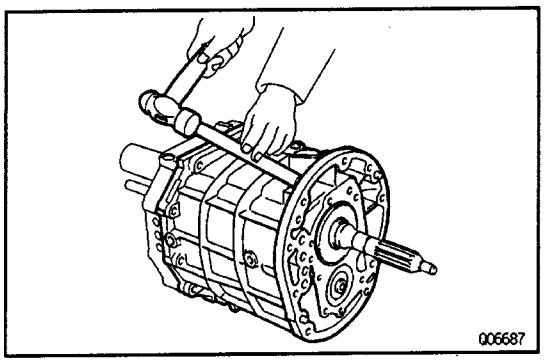

7. SEPARATE INTERMEDIATE PLATE FROM TRANSMISSION CASE

(a) Using a brass bar and hammer, carefully tap the transmission case.

(b) Remove the transmission case from the intermediate plate.

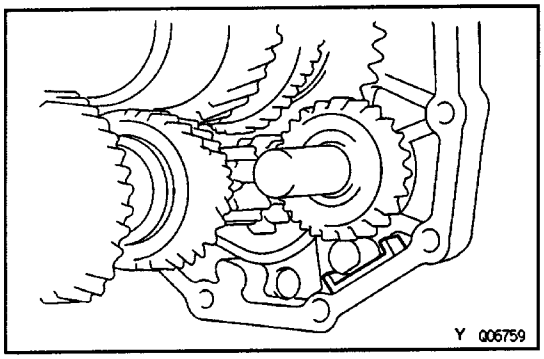

8. REMOVE MAGNET FROM INTERMEDIATE PLATE

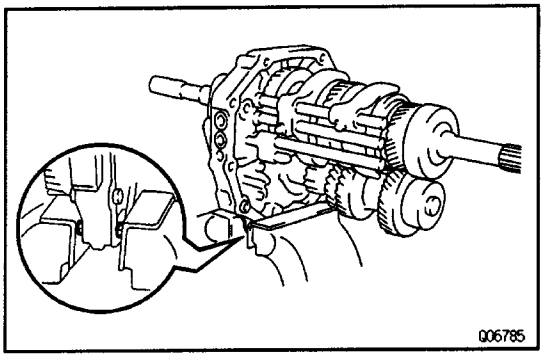

9. MOUNT INTERMEDIATE PLATE IN VISE

(a) Use the 2 clutch housing bolts, plate washers and suitable nuts, as shown.

NOTICE: Increase or decrease plate washers so that the bolt tip does not stand proud of the nut.

(b) Mount the intermediate plate in a vise.

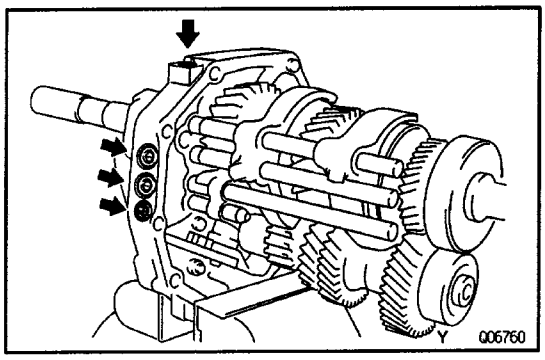

10. REMOVE STRAIGHT SCREW PLUGS, LOCKING BALLS AND SPRINGS

(a) Using a hexagon wrench, remove the 4 plugs.

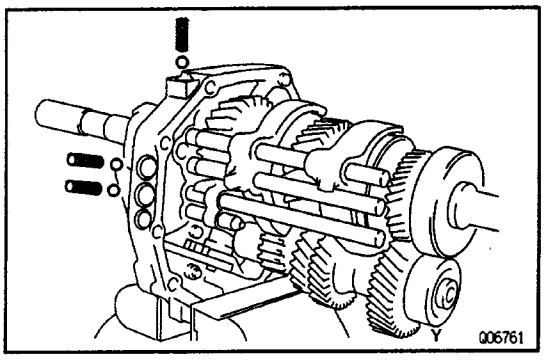

(b) Using a magnetic finger, remove the 3 springs and balls.

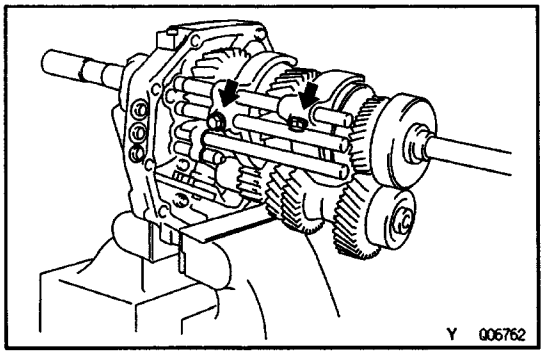

1. REMOVE SHIFT FORKS SET BOLTS

Remove the 2 bolts.

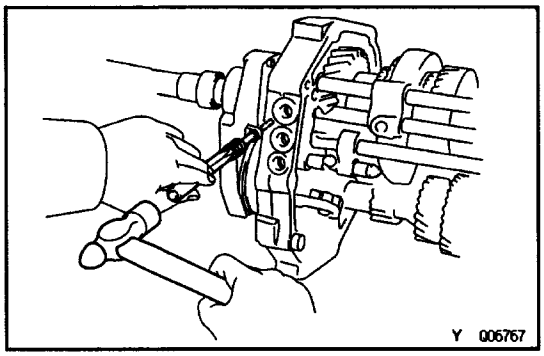

12. REMOVE SLOTTED SPRING PIN

Using a pin punch and hammer, drive out the pin.

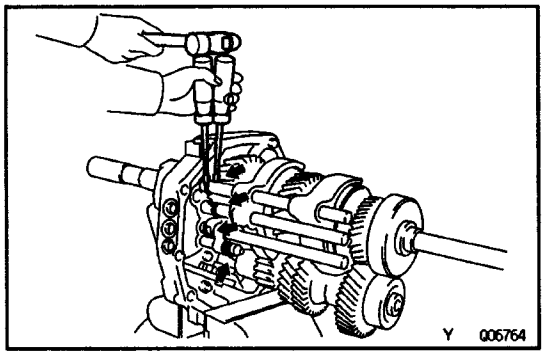

13. REMOVE SNAP RINGS

Using 2 screwdrivers and a hammer, tap out the 4 snap rings.

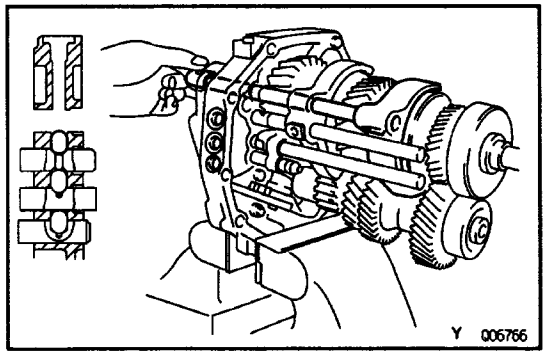

14. REMOVE SHIFT FORK SHAFT NO.2 AND SHIFT FORK N0.2

(a) Pull out the shift fork shaft No.2 from the intermediate plate.
(b) Remove the shift fork No.2.
(c) Using a magnetic finger, remove the interlock pin from the intermediate plate.

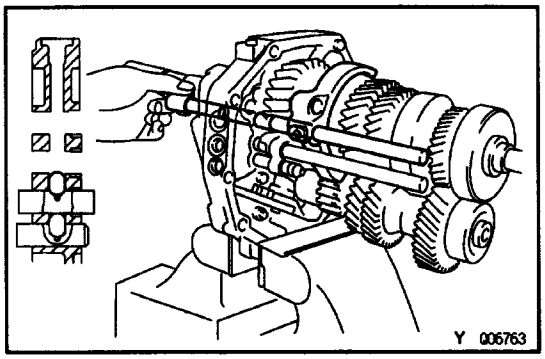

15. REMOVE SHIFT PORK SHAFT NO.1 AND SHIFT FORK NO.1

(a) Pull out the shift fork shaft No. 1 with the straight pin from the intermediate plate.
(b) Remove the shift fork No.1.
(c) Using a magnetic finger, remove the interlock pin from the intermediate plate.

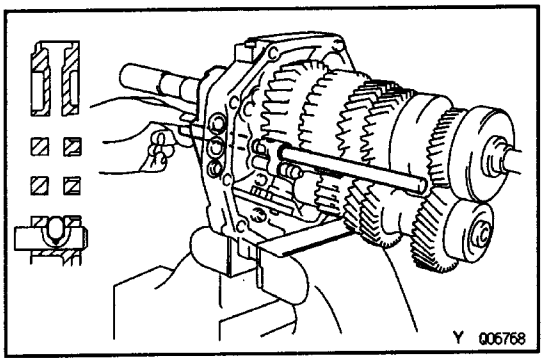

16. REMOVE SHIFT FORK SHAFT NO.3 AND SHIFT FORK NO.3

(a) Pull out the shift fork shaft No.3 from the intermediate plate.

(b) Remove the shift fork No.3.

(c) Using a magnetic finger, remove the interlock pin from the intermediate plate.

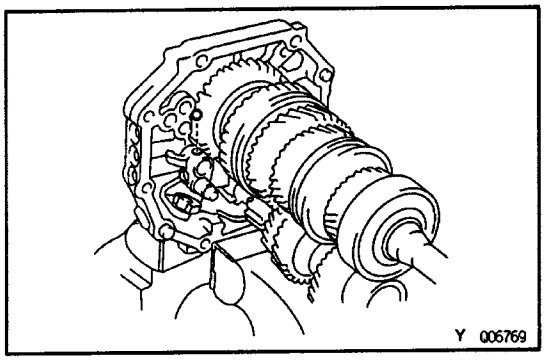

17. REMOVE SHIFT FORK SHAFT NO.4

(a) Using a magnetic finger, remove the ball.

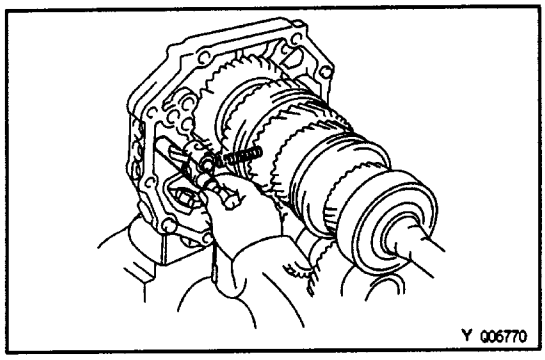

(b) Pull out the shift fork shaft No.4 from the intermediate plate.

NOTICE: Take care of the ball in the reverse shift head. It will spring out when you pull out the shift fork shaft No.4.

(c) Using a magnetic finger, remove the spring from the reverse shift fork.

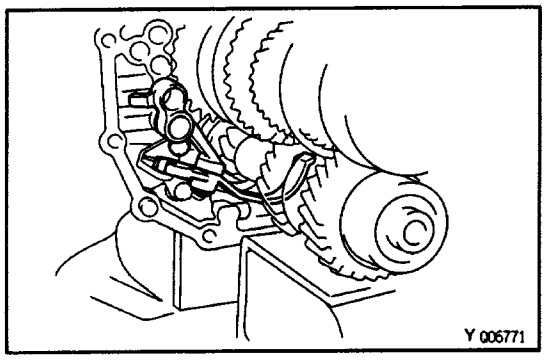

18. REMOVE REVERSE SHIFT FORK AND ARM

(a) Remove the reverse shift fork and arm.

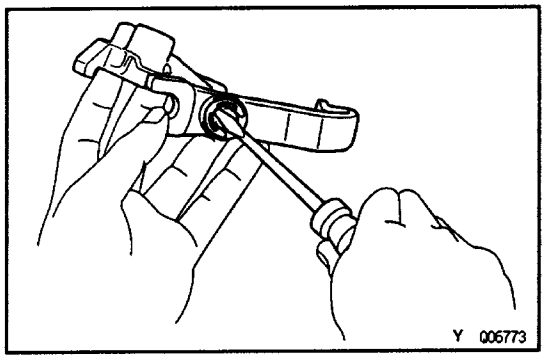

(b) Using a screwdriver, remove the E–ring.

(c) Separate the reverse shift fork and arm.

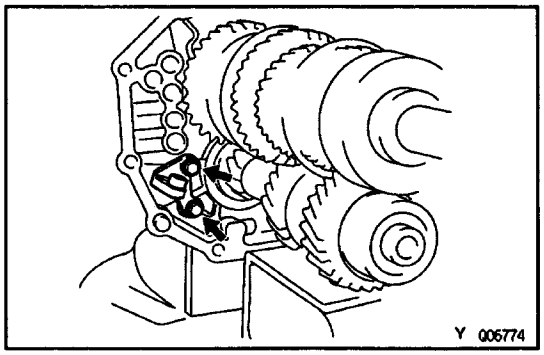

19. REMOVE REVERSE SHIFT ARM BRACKET

Remove the 2 bolts and the reverse shift arm bracket.

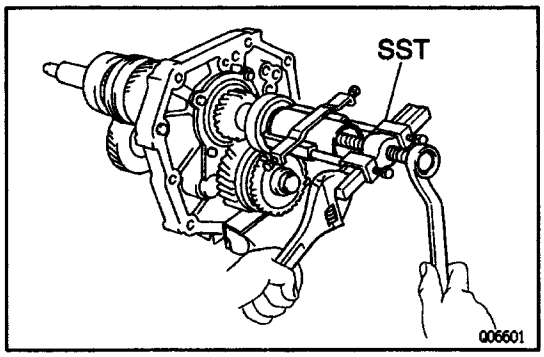

20. REMOVE SLEEVE FROM OUTPUT SHAFT

Using SST, remove the sleeve from the output shaft.
SST 09950 – 40010

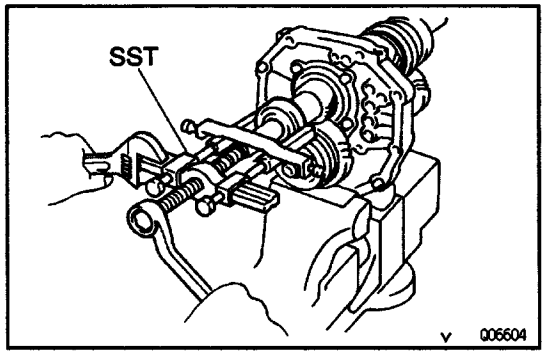

21. REMOVE OUTPUT SHAFT REAR BEARING

(a) Using 2 screwdrivers and a hammer, tap out the snap ring.
(b) Using SST, remove the rear bearing.
SST 09950–40010

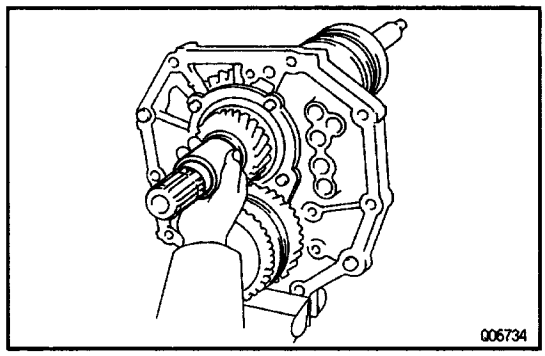

22. REMOVE SPACER

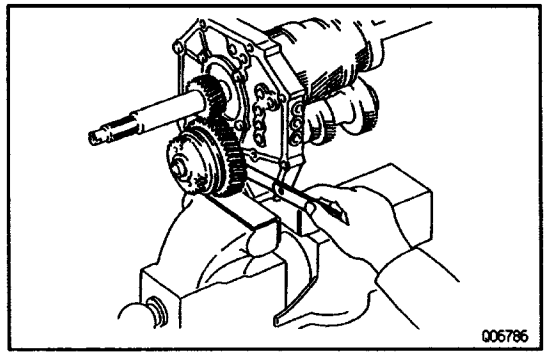

23. INSPECT COUNTER 5TH GEAR THRUST CLEARANCE

Using a feeler gauge, measure the counter 5th gear thrust clearance.

Standard clearance:

0.10 – 0.35 mm (0.0039 – 0.0138 in.)

Maximum clearance:

0.40 mm (0.0157 in.)

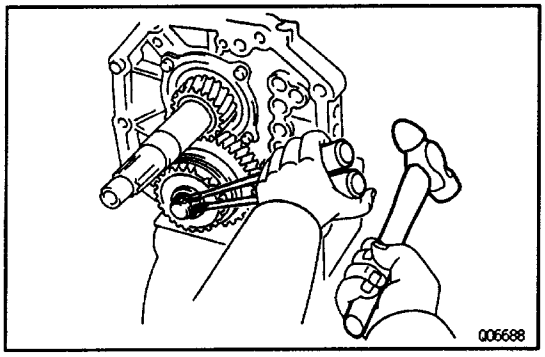

24. REMOVE GEAR SPLINE PIECE NO.5, SYNCHRONI–ZER RING, NEEDLE ROLLER BEARING AND COUNTER 5TH GEAR WITH HUB SLEEVE N0.3

(a) Using 2 screwdrivers and hammer, tap out the spap ring.

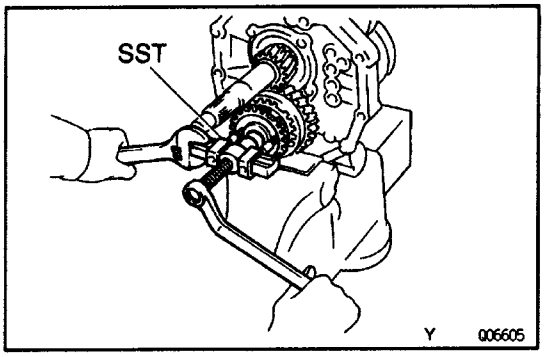

(b) Using SST, remove the gear spline piece No.5.
SST 09950–50010

(c) Remove the counter 5th gear with the hub sleeve No.3.

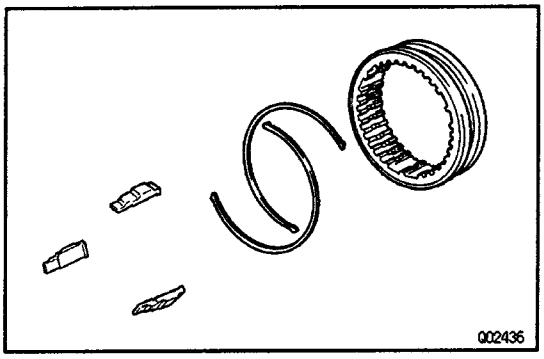

25. REMOVE SHIFTING KEYS AND SPRINGS FROM STH GEAR AND HUB SLEEVE NO.3

Using a screwdriver, remove the 3 shifting keys and 2 springs.

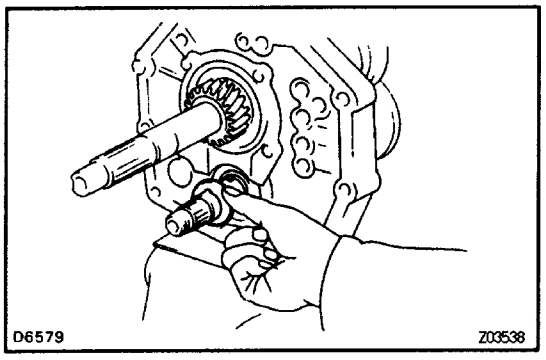

26. REMOVE THRUST WASHER AND STRAIGHT PIN

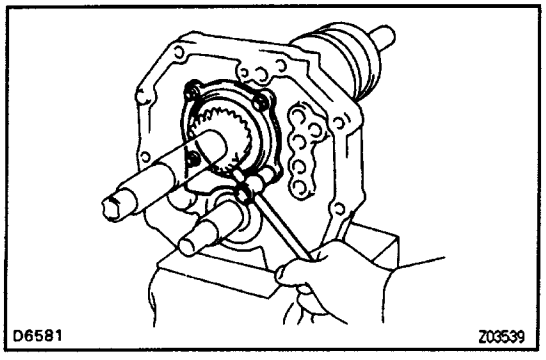

27. REMOVE REAR BEARING RETAINER

Remove the 4 bolts and rear bearing retainer.

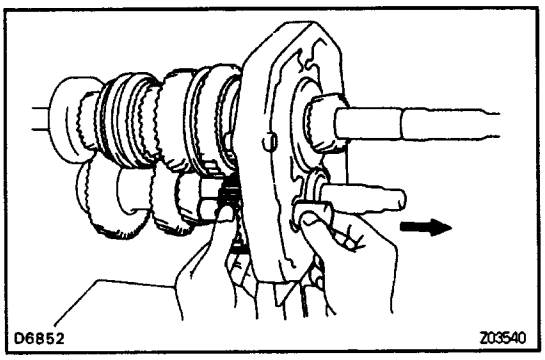

28. REMOVE REVERSE IDLER GEAR AND SHAFT

Pull out the shaft toward the rear.

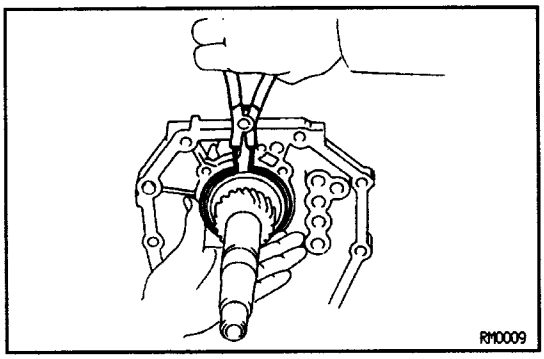

29. REMOVE BEARING SNAP RING

Using a snap ring expander, remove the snap ring.

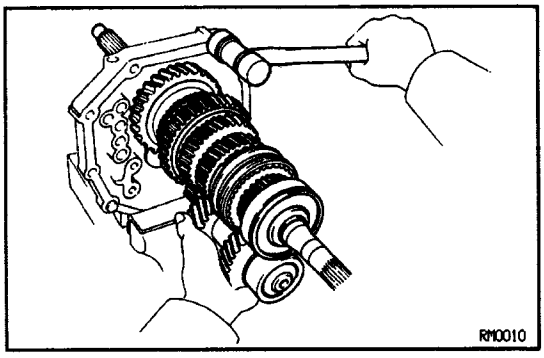

30. REMOVE OUTPUT SHAFT. COUNTER GEAR AND INPUT SHAFT AS A UNIT FROM INTERMEDIATE PLATE

(a) Remove the output shaft, counter gear and input shaft as a unit from the intermediate plate by pulling on the counter gear and tapping on the intermediate plate with a plastic hammer.

(b) Remove the input shaft with the needle roller bearing from the output shaft.

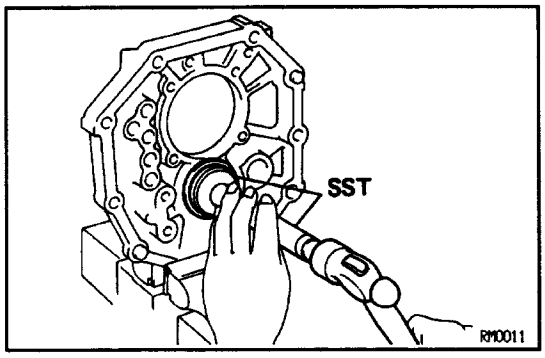

31. REMOVE COUNTER REAR BEARING FROM INTER–MEDIATE PLATE

Using SST and a hammer, remove the counter rear bearing.

SST 09608–12010 (09608–00020, 09608–00050)

COUNTER GEAR AND REVERSE IDLER GEAR

COMPONENTS

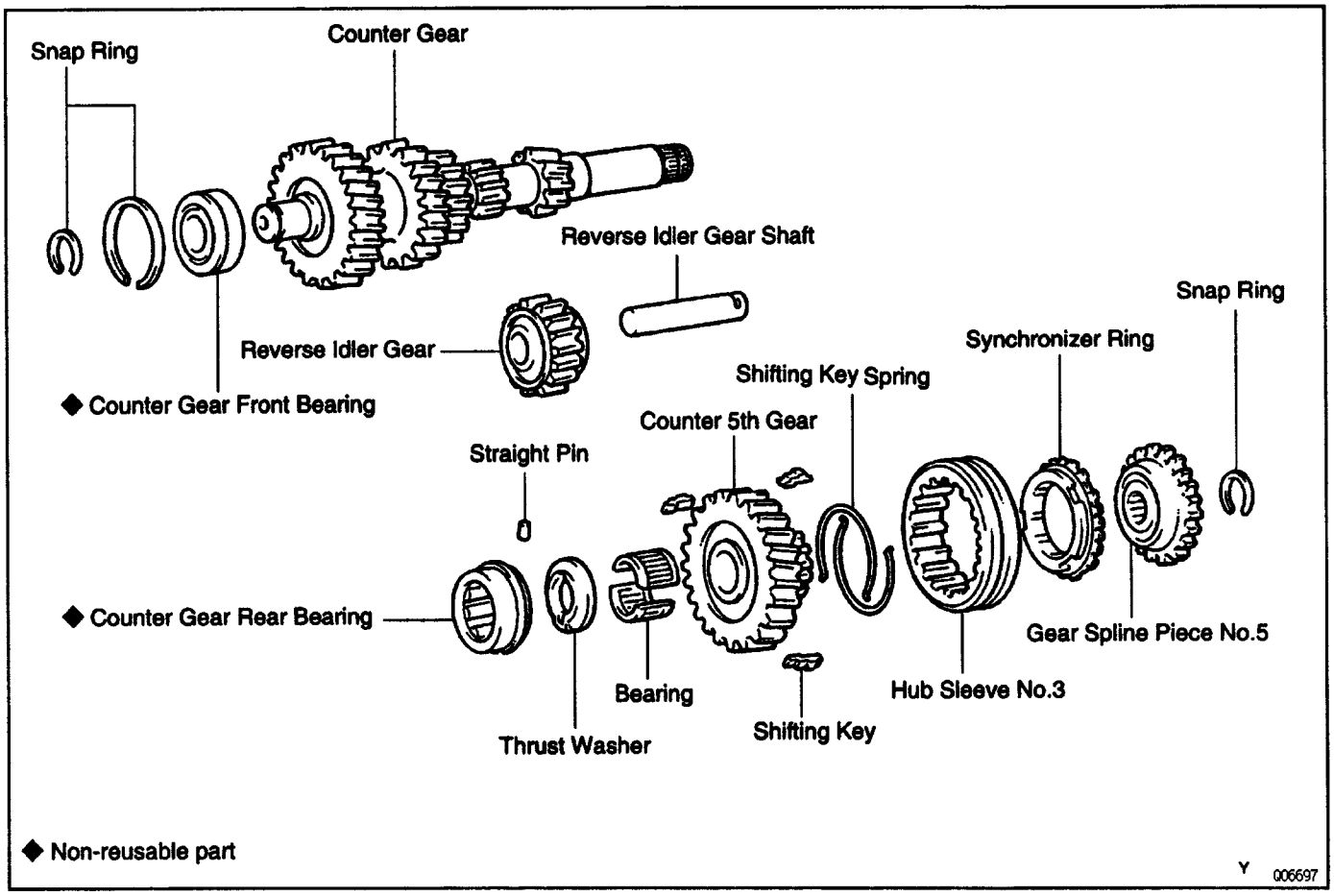

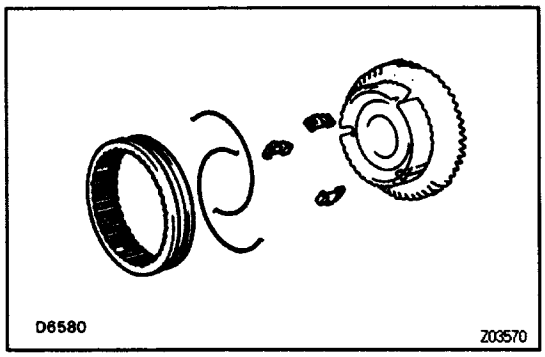

COUNTER GEAR COMPONENT PARTS DISASSEMBLY

REMOVE HUB SLEEVE NO.3. SHIFTING KEYS AND SPRINGS FROM COUNTER 5TH GEAR

Using a screwdriver, remove the 3 shifting keys and 2 springs from the counter 5th gear.

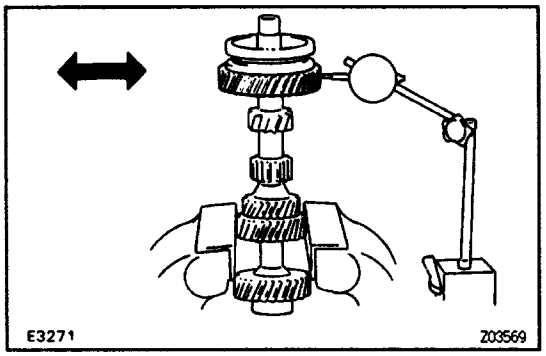

COUNTER GEAR AND REVERSE IDLER GEAR COMPONENT PARTS INSPECTION

1. INSPECT 5TH GEAR RADIAL CLEARANCE

(a) Install the spacer, counter 5th gear and needle roller bearings.

(b) Using a dial indicator, measure the counter 5th gear radial clearance.

Standard clearance:
0.015 – 0.088 mm (0.0006 – 0.0027 in.)
Maximum clearance:
0.160 mm (0.0063 in.)
If the clearance exceeds the maximum, replace the gear bearing or shaft.

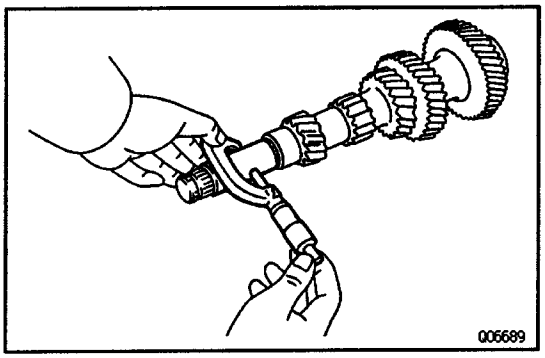

2. INSPECT COUNTER GEAR
Using a micrometer, measure the outer diameter of the counter gear journal.
Minimum diameter:
27.860 mm (1.0988 In.)
If the outer diameter is less than the minimum, replace the counter gear.

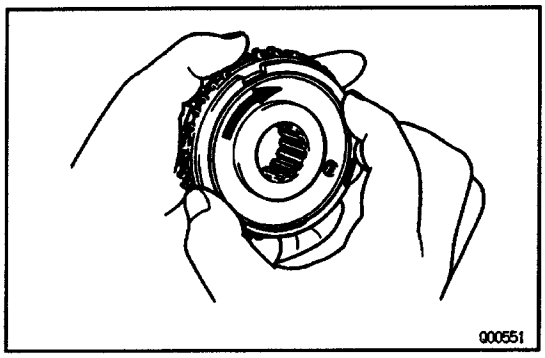

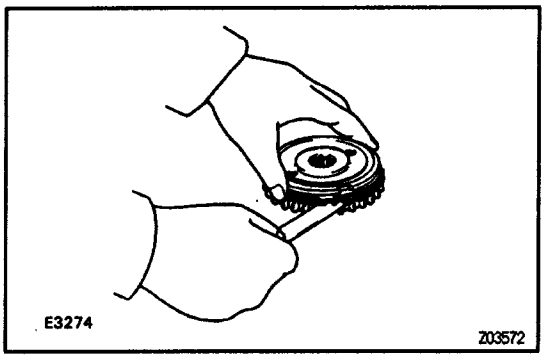

3. INSPECT SYNCHRONIZER RING
(a) Check for wear or damage.
(b) Check the braking effect of the synchronizer ring.
Turn the synchronizer ring in one direction while pushing it to the gear cone. Check that the ring locks.
If the braking effect is insufficient, apply a small amount of fine lapping compound between the synchronizer ring and gear cone.
Lightly rub the synchronizer ring and gear cone together.
NOTICE: Ensure the fine lapping compound is completely washed off after rubbing.
(c) Check again the braking effect of the synchronizer ring. If it does not lock, replace the synchronizer ring.
(d) Using a feeler gauge, measure the clearance between the synchronizer ring back and gear spline end.
Minimum clearance:
0.8 mm (0.031 in.)
HINT:
- When replacing either a synchronizer ring or gear, apply a small amount of fine lapping compound between the synchronizer ring and gear cone.
  Lightly rub the synchronizer ring and gear cone together.
- When replacing both the synchronizer ring and gear, there is no need to apply any compound or to rub them together.

NOTICE: Ensure the fine lapping compound is completely washed off after rubbing.

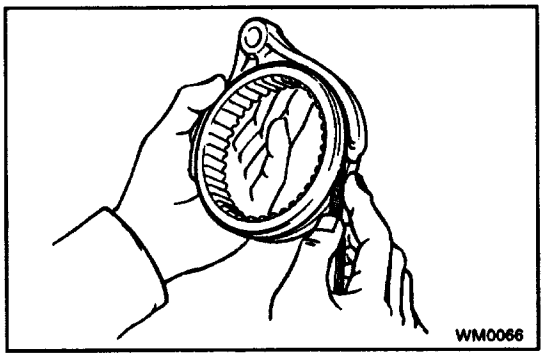

4. INSPECT SHIFT FORKS AND HUB SLEEVE CLEARANCE

Using a feeler gauge, measure the clearance between the hub sleeve and shift fork.

Maximum clearance:

1.0 mm (0.039 in.)

If the clearance exceeds the maximum, replace the shift fork or hub sleeve.

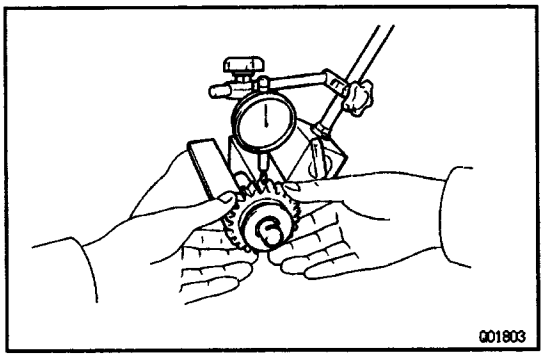

6. INSPECT REVERSE IDLER GEAR RADIAL CLEARANCE

Using a dial indicator, measure the reverse idler gear radial clearance.

Standard clearance:

0.040–0.082 mm (0.0016–0–0032 in.)

Maximum clearance:

0.130 mm (0.0061 in.)

If the clearance exceeds the maximum, replace the reverse idler gear or reverse idler gear shaft.

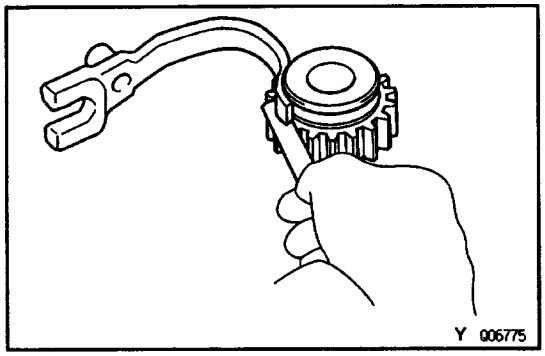

6. INSPECT REVERSE IDLER GEAR AND SHIFT ARM CLEARANCE

Using a feeler gauge, measure the clearance between the reverse idler gear and shift arm.

Standard clearance:

0.05–0.35 mm (0.0020–0.0138 in.)

Maximum clearance:

0.50 mm (0.0197 in.)

If the clearance exceeds the maximum, replace the shift arm or reverse idler gear.

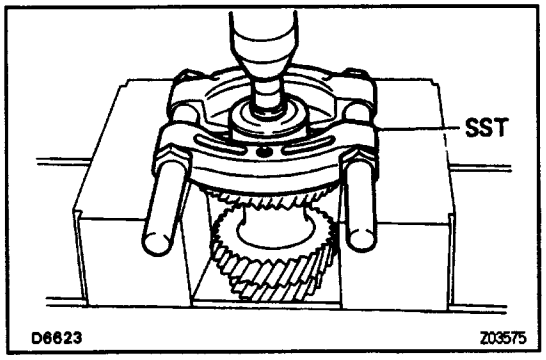

BEARING REPLACEMENT

IF NECESSARY, REPLACE COUNTER GEAR FRONT BEARING

(a) Using a snap ring expander, remove the snap ring.

(b) Using SST and a press, remove the bearing.

SST 09850–00020

(c) Replace the side race.

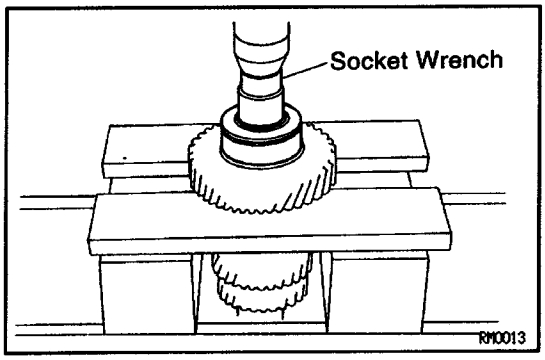

(d) Using a socket wrench and press, press in a new bearing and side race.

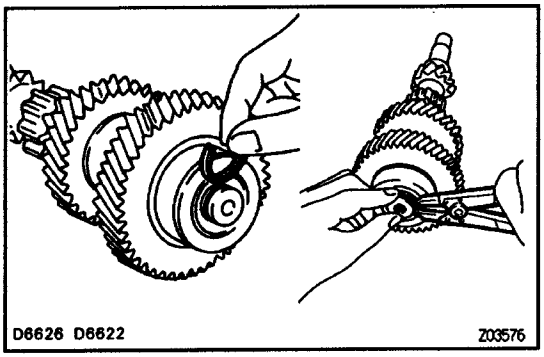

(e) Select a snap ring that will allow minimum axial play.

Mark	Thickness mm (in.)
A	2.00 – 2.05 (0.0787 – 0.0807)
B	2.05 – 2.10 (0.0807 – 0.0827)
C	2.10 – 2.15 (0.0827 – 0.0846)
D	2.15 – 2.20 (0.0846 – 0.0866)
E	2.20 – 2.25 (0.0866 – 0.0886)
F	2.25 – 3.00 (0.0886 – 0.1181)

(f) Using a snap ring expander, install the snap ring.

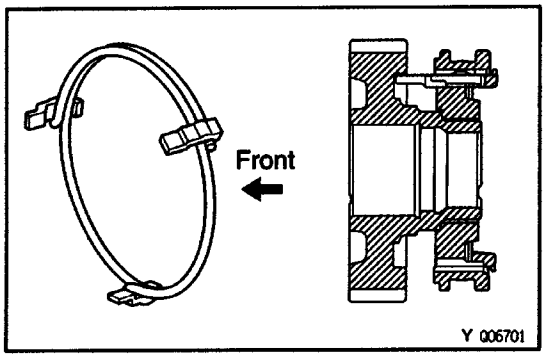

COUNTER GEAR COMPONENT PARTS ASSEMBLY

INSTALL HUB SLEEVE NO.3, SHIFTING KEYS AND SPRINGS TO COUNTER 5TH GEAR

(a) Install the counter 5th gear and shifting keys to the hub sleeve.

(b) Install the shifting key springs under the shifting keys.

NOTICE: Position the key springs :o that their end gaps are not in line.

R150F MANUAL TRANSMISSION

DESCRIPTION

DESCRIPTION

Transmission type R150F uses constant mesh synchronizers for forward gears, and a sliding mesh reverse gear.

The input shaft is composed of the 1st and 2nd speed gears and the reverse drive gear, and the output shaft is composed of the drive gear (for use with the ring gear).

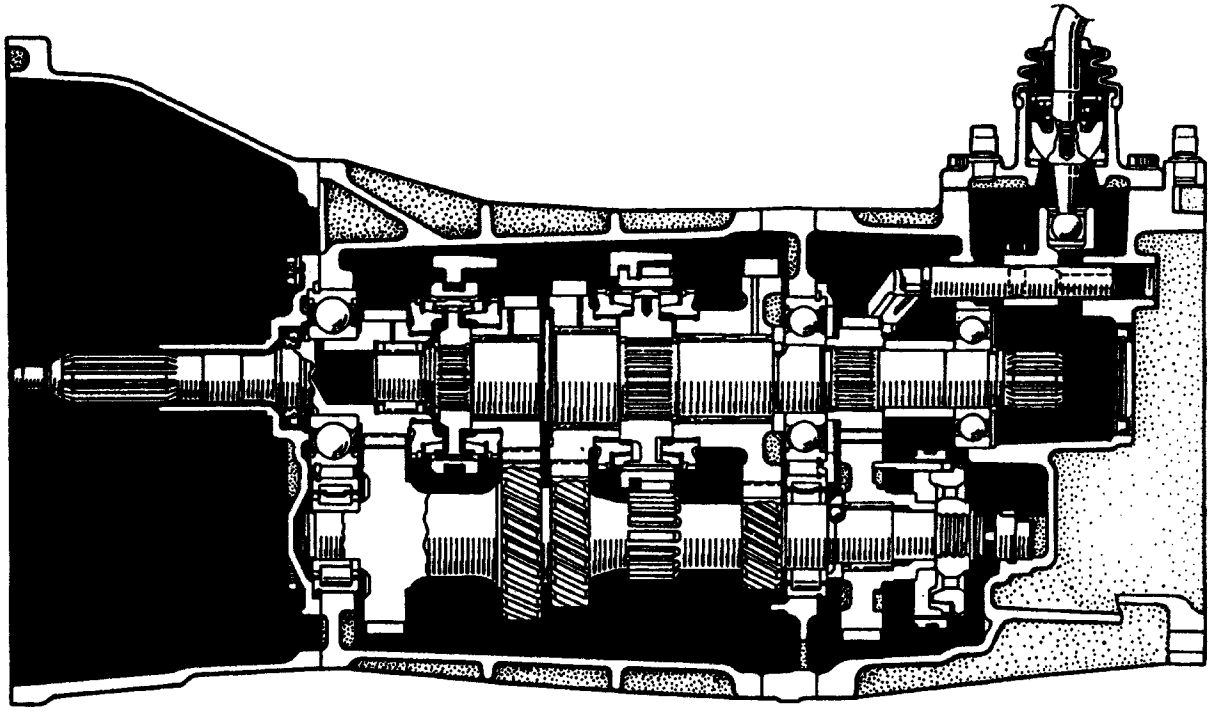

Type of Transmission		R150F
Type of Engine		3VZ–E
Gear Ratio	1st Gear	3.830
	2nd Gear	2.062
	3rd Gear	1.436
	4th Gear	1.000
	5th Gear	0.838
	Reverse Gear	4.220
Oil Capacity		2.2 liters (2.3 US qts, 1.9 Imp. qts)
Oil Viscosity		SAE 75W–90
Oil Grade		API GL–3, GL–4 or GL–5

FRONT BEARING RETAINER

COMPONENTS

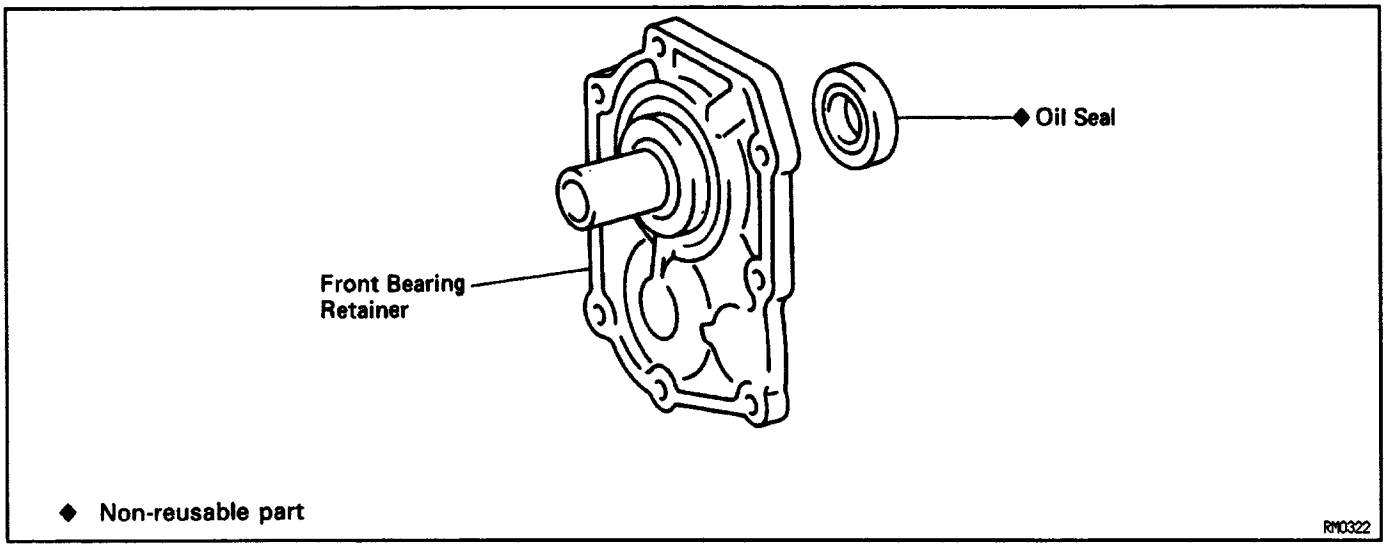

OIL SEAL REPLACEMENT

IF NECESSARY, REPLACE FRONT BEARING RETAINER OIL SEAL

(a) Using a screwdriver, pry out the oil seal.

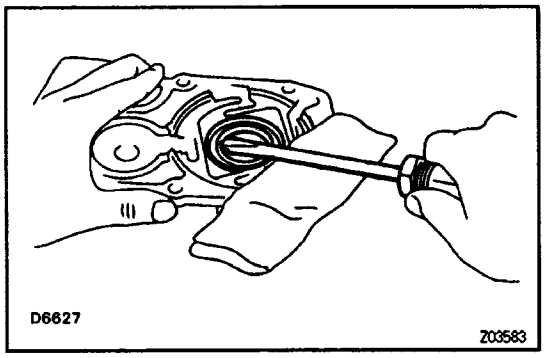

(b) Using SST and a hammer, drive in a new oil seal.

SST 09608 – 35014 (09608 – 06020, 09608 – 06090)

Oil seal depth:

11.2 – 12.2 mm (0.441 – 0.480 in.)

from retainer end

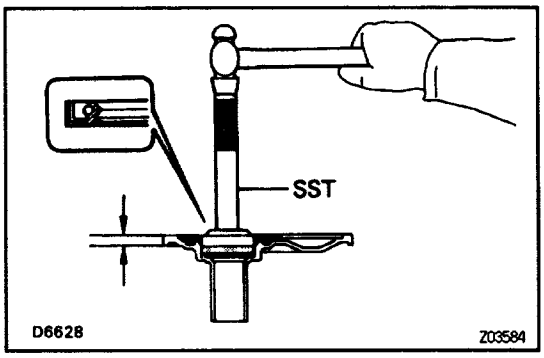

INPUT SHAFT
COMPONENTS

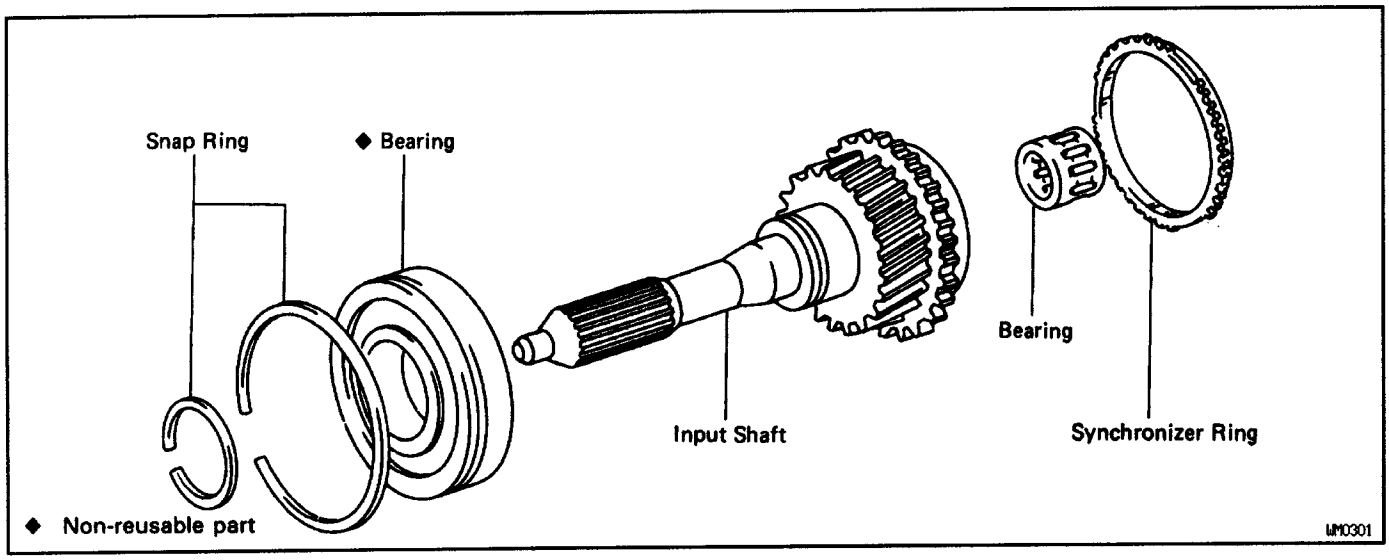

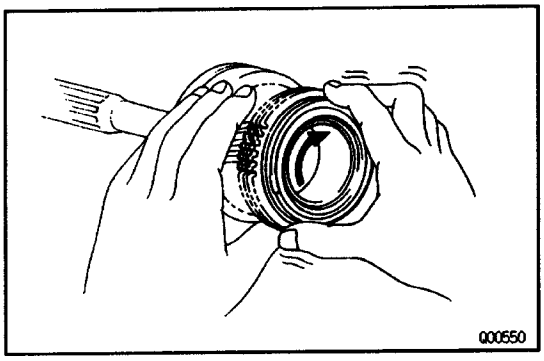

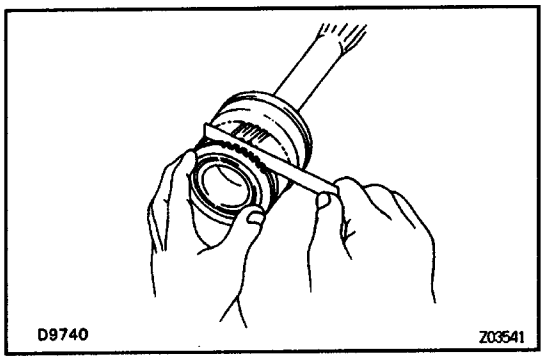

INPUT SHAFT INSPECTION

INSPECT SYNCHRONIZER RING

(a) Check for wear or damage.

(b) Check the braking effect of the synchronizer ring.

Turn the synchronizer ring in one direction while pushing it to the gear cone. Check that the ring locks.

If the braking effect is insufficient, apply a small amount of fine lapping compound between the synchronizer ring and gear cone.

Lightly rub the synchronizer ring and gear cone together.

NOTICE: Ensure the fins lapping compound is completely washed off after rubbing.

(c) Check again the braking effect of the synchronizer ring. If it does not lock, replace the synchronizer ring.

(d) Using a feeler gauge, measure the clearance between the synchronizer ring back and gear spline end.

Minimum clearance:

0.8 mm (0.031 in.)

HINT:

- When replacing either a synchronizer ring or gear, apply a small amount of fine lapping compound between the synchronizer ring and gear cone.

  Lightly rub the synchronizer ring and gear cone together.

- When replacing both the synchronizer ring and gear, there is no need to apply any compound or to rub them together.

NOTICE: Ensure the fine lapping compound is completely washed off after rubbing.

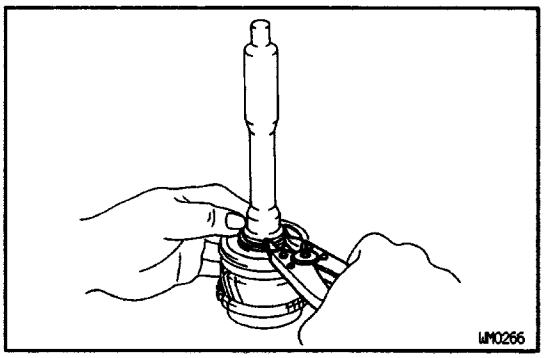

BEARING REPLACEMENT

IF NECESSARY, REPLACE INPUT SHAFT BEARING

(a) Using a snap ring expander, remove the snap ring.

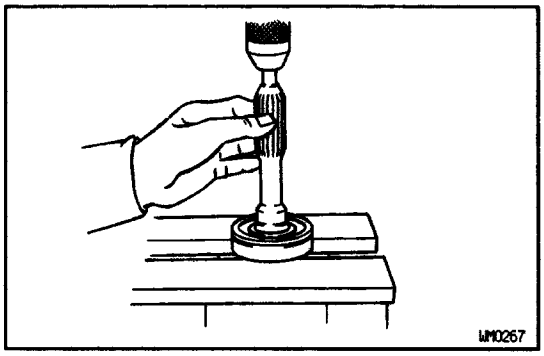

(b) Using a press, remove the bearing.

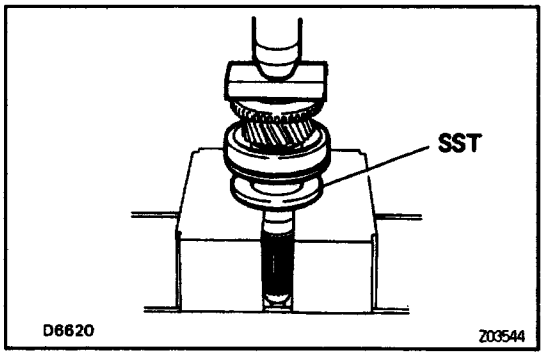

(c) Using SST and a press, install a new bearing.
SST 09506 –35010

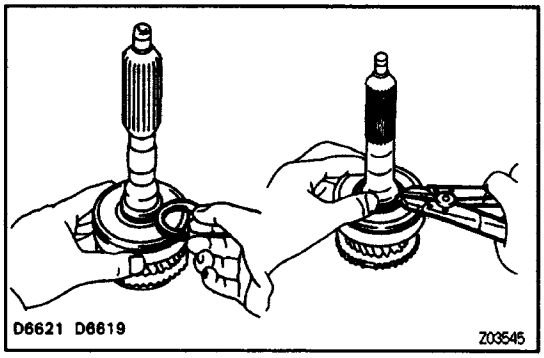

(d) Select a snap ring that will allow minimum axial play.

Mark	Thickness mm (in.)
A	2.10 – 2.15 (0.0827 – 0.0846)
B	2.15 – 2.20 (0.0846 – 0.0866)
C	2.20 – 2.25 (0.0866 – 0.0886)
D	2.25 – 2.30 (0.0886 – 0.0906)
E	2.30 – 2.35 (0.0906 – 0.0925)
F	2.35 – 2.40 (0.0925 – 0.0945)
G	2.40 – 2.45 (0.0945 – 0.0965)

OPERATION

- The illustration below shows the engagements of the transmission gears.

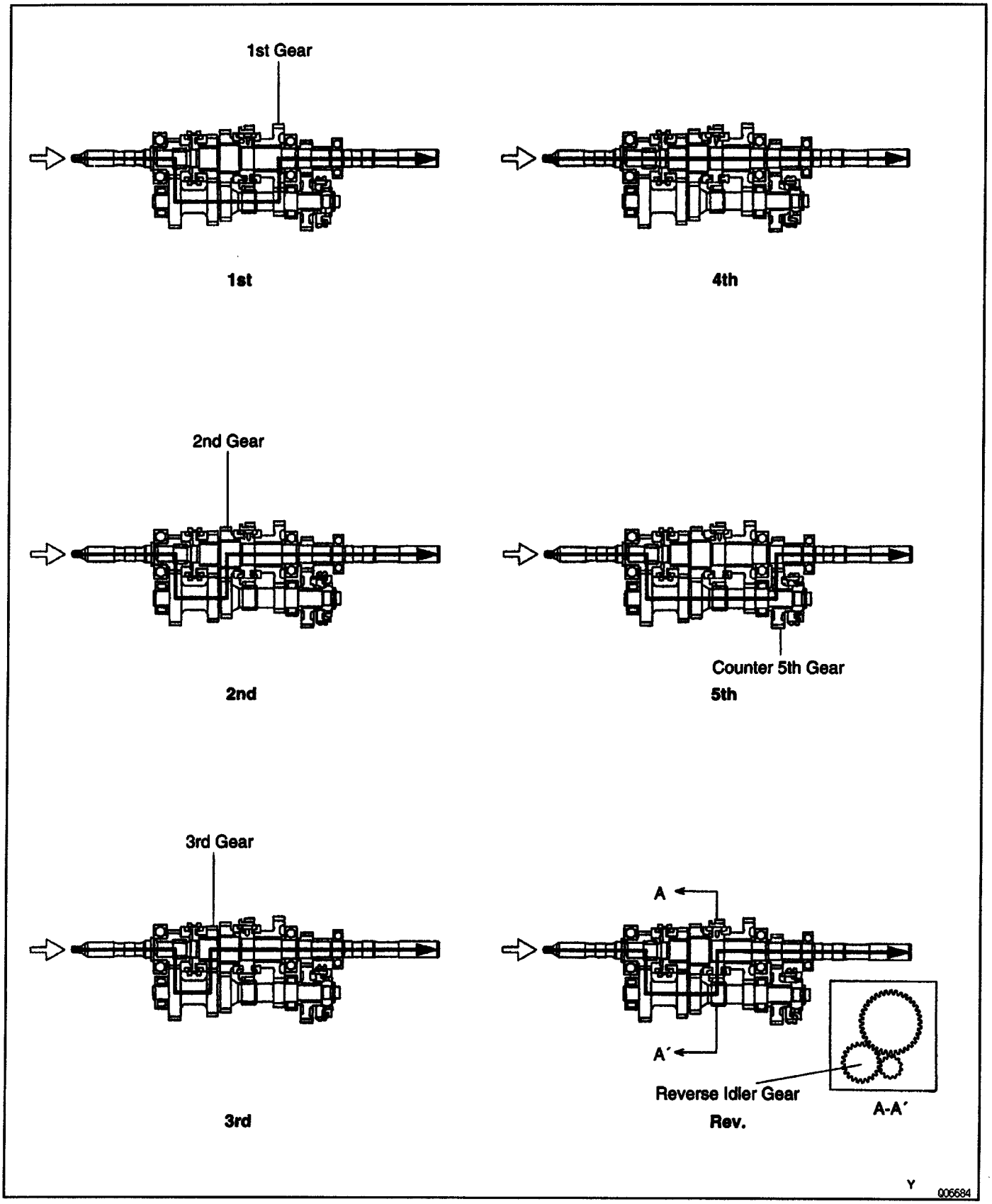

OUTPUT SHAFT

COMPONENTS

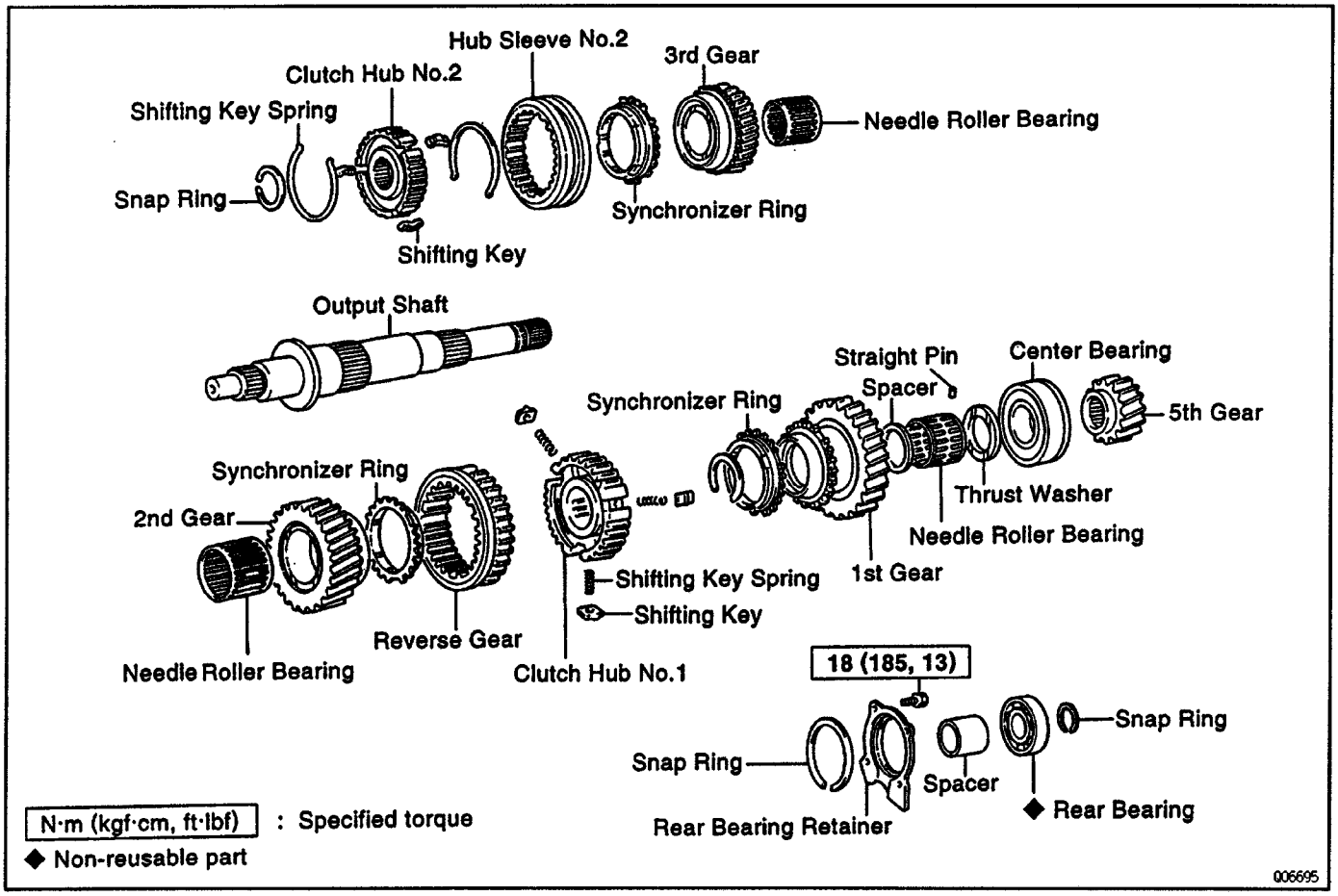

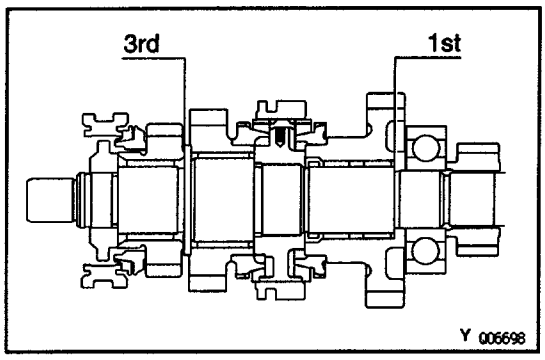

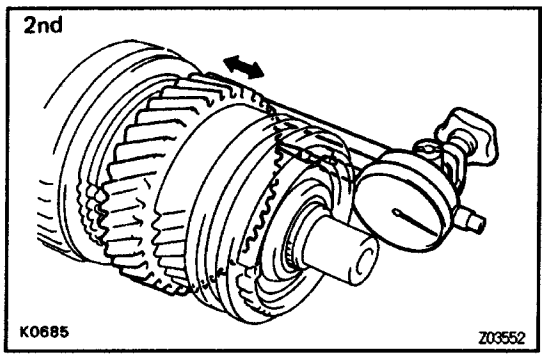

OUTPUT SHAFT DISASSEMBLY

1. INSPECT EACH GEAR THRUST CLEARANCE

Measure the thrust clearance of each gear.

Standard clearance:

1st gear

0.10–0.45 mm (0.0039–0.0177 in.)

2nd and 3rd gears

0.10–a.25 mm (0.0039–0.0098 in.)

Maximum clearance:

1st gear

0.50 mm (0.0197 in.)

2nd and 3rd gears

0.30 mm (0.0118 in.)

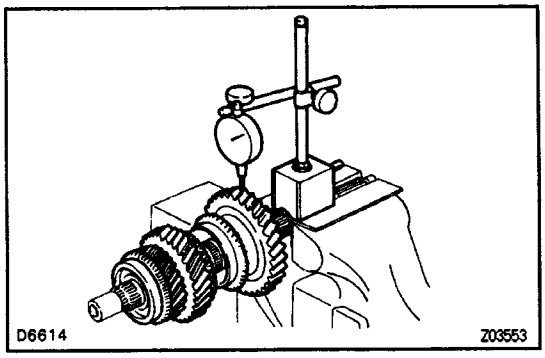

2. INSPECT RADIAL CLEARANCE

Using a dial indicator, measure the radial clearance of each gear.

Standard clearance:

1st gear

0.020–0.073 mm (0.0008–0.0029 in.)

2nd and 3rd gears

0.015–0.068 mm (0.0006–0.0027 in.)

Maximum clearance:

1st gear

0.160 mm (0.0063 in.)

2nd and 3rd gears

0.180 mm (0.0063 In.)

If the clearance exceeds maximum, replace the gear, needle roller bearing or shaft.

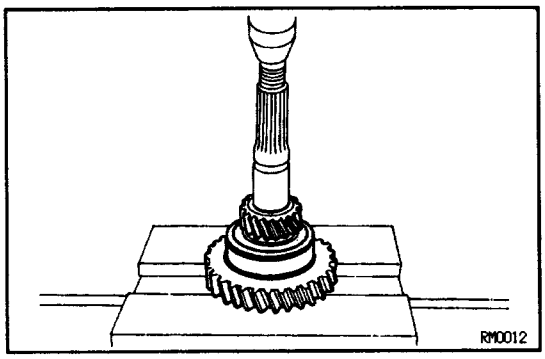

3. REMOVE 5TH GEAR. CENTER BEARING AND 1ST GEAR ASSEMBLY

(a) Using a press, remove the 5th gear, center bearing, thrust washer and 1st gear.

(b) Remove the synchronizer ring.

(c) Remove the straight pin and needle roller bearing.

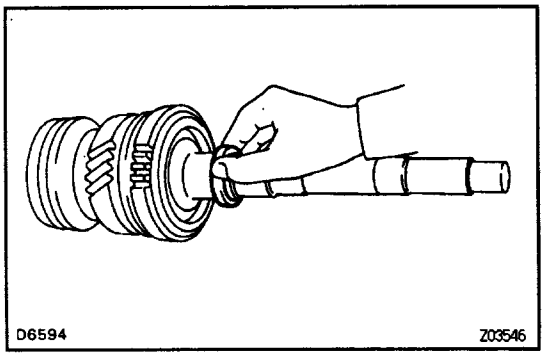

(d) Remove the spacer.

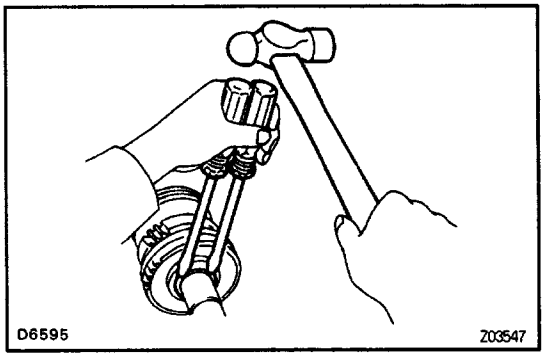

4. REMOVE REVERSE GEAR ASSEMBLY AND 2 ND GEAR ASSEMBLY

(a) Using 2 screwdrivers and a hammer, tap out the snap ring.

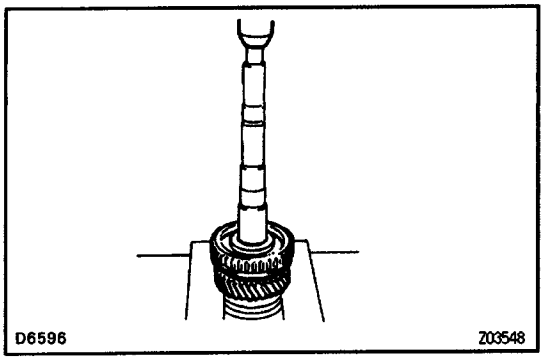

(b) Using a press, remove the reverse gear assembly and 2nd gear.
(c) Remove the needle roller bearing.

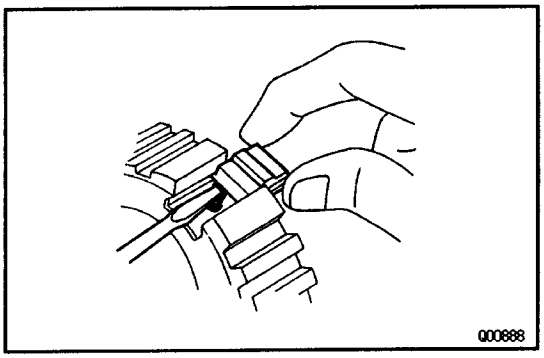

6. REMOVE REVERSE GEAR, SHIFTING KEYS AND SPRINGS FROM CLUTCH HUB NO.1

(a) Remove the reverse gear from the clutch hub No. 1.
(b) Push the shifting key spring with a screwdriver, remove the 3 shifting keys and key springs.

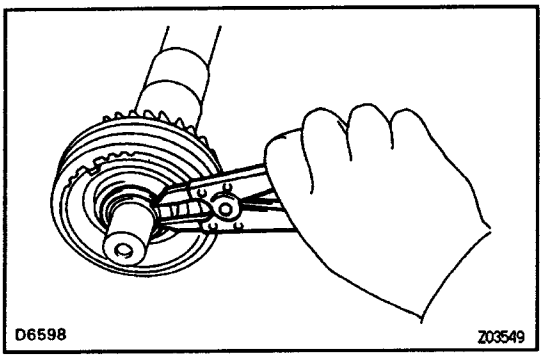

6. REMOVE HUB SLEEVE NO.2 ASSEMBLY AND 3RD GEAR ASSEMBLY

(a) Using a snap ring expander, remove the snap ring.

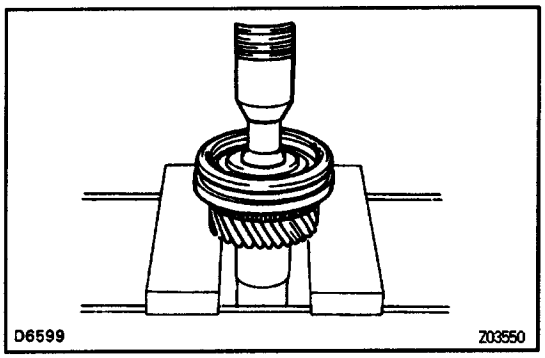

(b) Using a press, remove the hub sleeve No. 2, synchronizer ring and 3rd gear.
(c) Remove the needle roller bearing.

7. REMOVE SHIFTING KEYS AND SPRINGS FROM HUB SLEEVE NO.2 ASSEMBLY

Using a screwdriver, remove the 3 shifting keys and 2 springs.

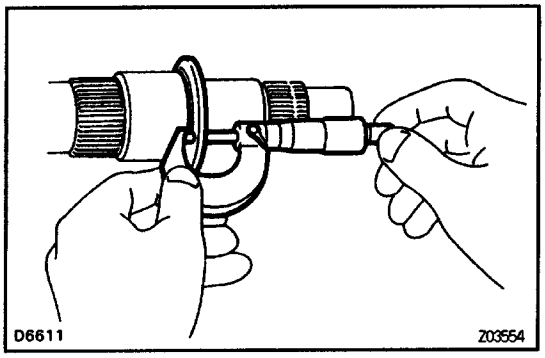

OUTPUT SHAFT COMPONENT PARTS INSPECTION

1. INSPECT OUTPUT SHAFT

(a) Using a micrometer, measure the output shaft flange thickness.

Minimum thickness:
4.70 mm (0.1850 in.)

If the thickness is less than the minimum, replace the output shaft.

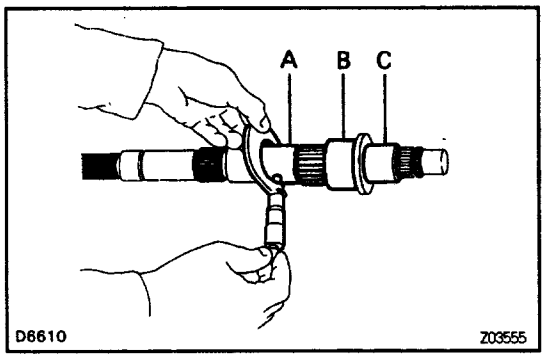

(b) Using a micrometer, measure the outer diameter of the output shaft journal.

Minimum diameter:

A 1st gear 38.860 mm (1.5299 in.)
B 2nd gear 46.860 mm (1.8449 in.)
C 3rd gear 37.860 mm (1.4905 in.)

If the outer diameter is less than the minimum, replace the output shaft.

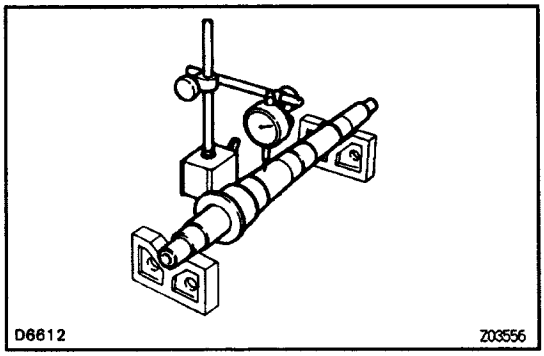

(c) Using a dial indicator, check the shaft runout.

Maximum runout:

0.06 mm (0.0024 in.)

If the runout exceeds the maximum, replace the output shaft.

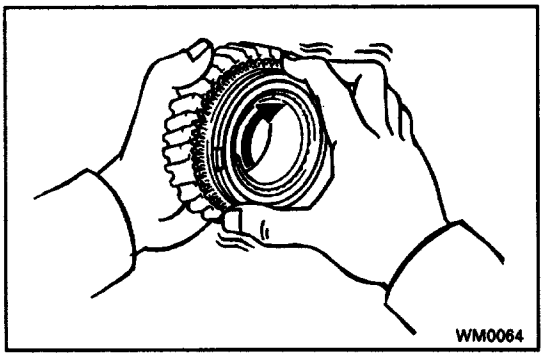

2. INSPECT SYNCHRONIZER RINGS

(a) Check for wear or damage.

(b) Check the braking effect of the synchronizer ring.

Turn the synchronizer ring in one direction while pushing it to the gear cone. Check that the ring locks.

If the braking effect is insufficient, apply a small amount of fine lapping compound between the synchronizer ring and gear cone.

Lightly rub the synchronizer ring and gear cone together.

NOTICE: Ensure the fine lapping compound is completely washed off after rubbing.

(c) Check again the braking effect of the synchronizer ring. If it does not lock, replace the synchronizer ring.

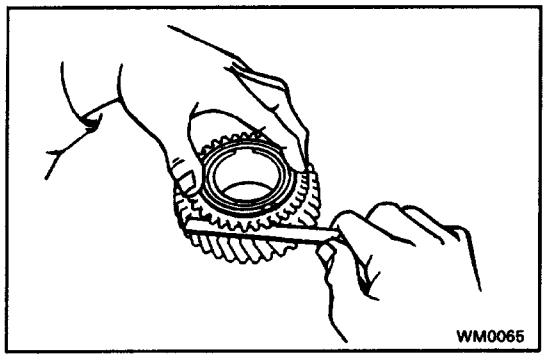

(d) Using a feeler gauge, measure the clearance between the synchronizer ring back and gear spline end.

Minimum clearance:

0.8 mm (0.031 in.)

HINT:

- When replacing either a synchronizer ring or gear, apply a small amount of fine lapping compound between the synchronizer ring and gear cone.

  Lightly rub the synchronizer ring and gear cone together.
- When replacing both the synchronizer ring and gear, there is no need to apply any compound or to rub them together.

NOTICE: Ensure the fine lapping compound is completely washed off after rubbing.

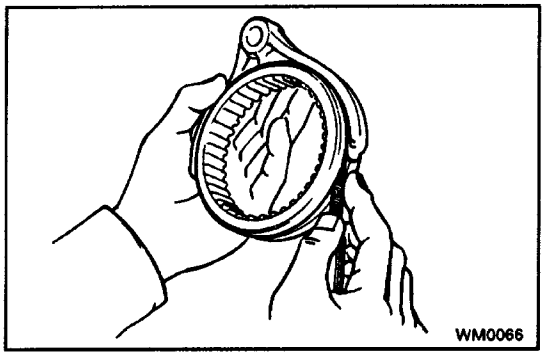

3. INSPECT SHIFT FORKS AND HUB SLEEVES CLEARANCE

Using a feeler gauge, measure the clearance between the hub sleeve and shift fork.

Maximum clearance:

1.0 mm (0.039 in.)

If the clearance exceeds the maximum, replace the shift fork or hub sleeve.

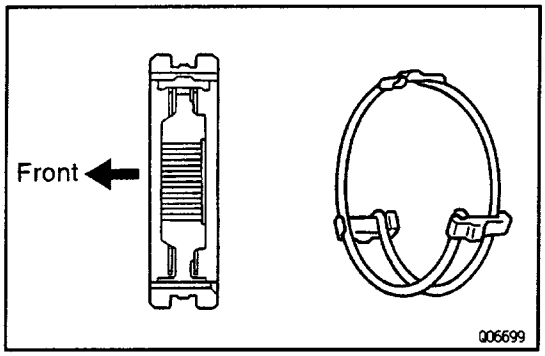

OUTPUT SHAFT ASSEMBLY

1. INSTALL CLUTCH HUB NO.2 INTO HUB SLEEVE NO.2

(a) Install the clutch hub No.2 and shifting keys to the hub sleeve No.2.

(b) Install the shifting key springs under the shifting keys.

NOTICE: Position the key springs :o that their end gaps are not in line.

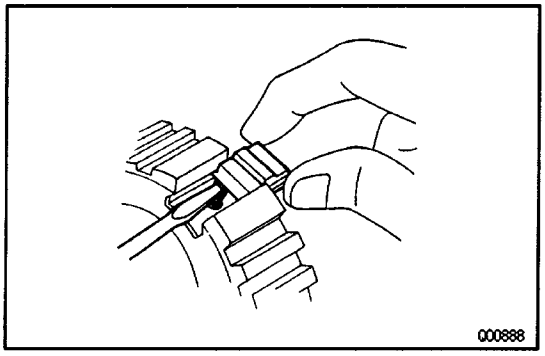

2. INSTALL CLUTCH HUB NO.1 INTO REVERSE GEAR

(a) Install the 3 shifting key springs to the clutch hub No. 1.

(b) While pushing the shifting key spring with a screwdriver, install the 3 shifting keys.

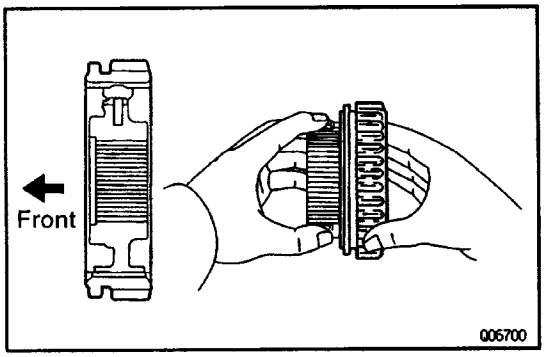

(c) While pushing the 3 shifting keys, install the clutch hub No.1 to the reverse gear, as shown.

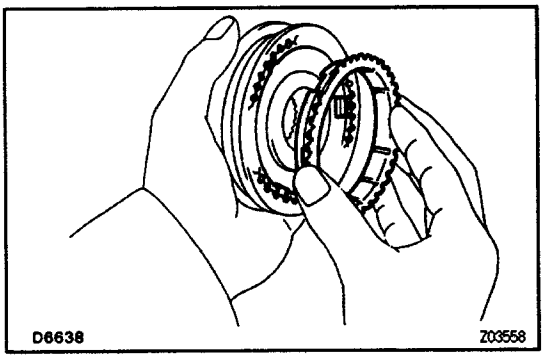

3. INSTALL 3RD GEAR AND HUB SLEEVE NO.2 ON OUTPUT SHAFT

(a) Apply gear oil to the shaft and needle roller bearing.

(b) Place the synchronizer ring on the gear and align the ring slots with the shifting keys.

(c) Install the needle roller bearing in the 3rd gear.

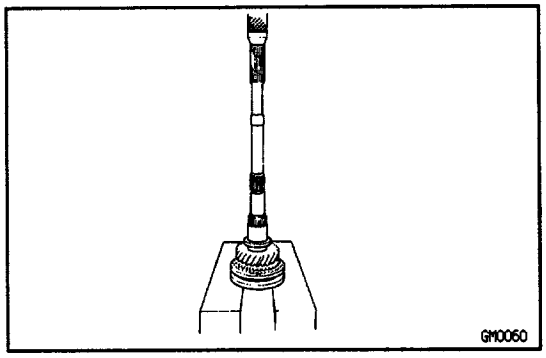

(d) Using a press, install the 3rd gear and hub sleeve No.2.

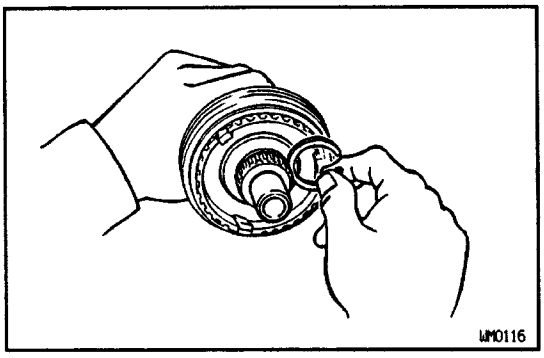

4. INSTALL SNAP RING

(a) Select a snap ring that will allow minimum axial play.

Mark	Thickness mm (in.)
A	1.80 – 1.85 (0.0709 – 0.0728)
B	1.85 – 1.90 (0.0728 – 0.0748)
C	1.90 – 1.95 (0.0748 – 0.0768)
D	1.95 – 2.00 (0.0768 – 0.0787)
E	2.00 – 2.05 (0.0787 – 0.0807)
F	2.05 – 2.10 (0.0807 – 0.0827)
G	2.10 – 2.15 (0.0827 – 0.0846)

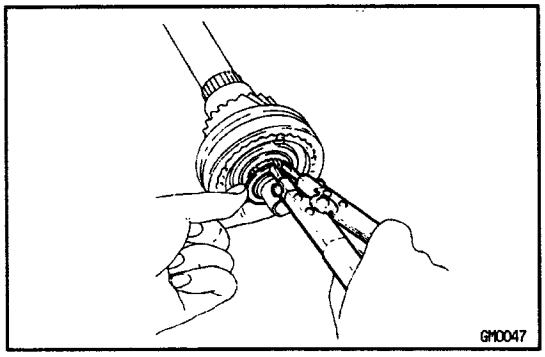

(b) Using a snap ring expander, install the snap ring.

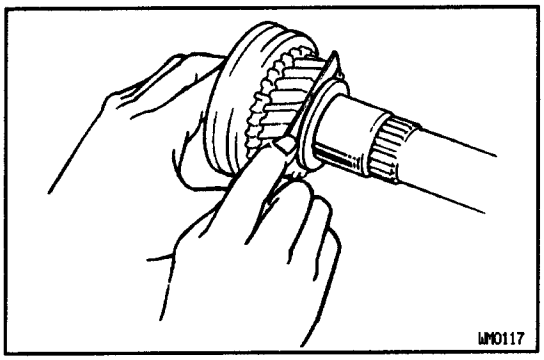

5. INSPECT 3RD GEAR THRUST CLEARANCE

Using a feeler gauge, measure the 3rd gear thrust clearance.

Standard clearance:

0.10 – 0.25 mm (0.0039 – 0.0098 in.)

Maximum clearance:

0.30 mm (0.0118 in.)

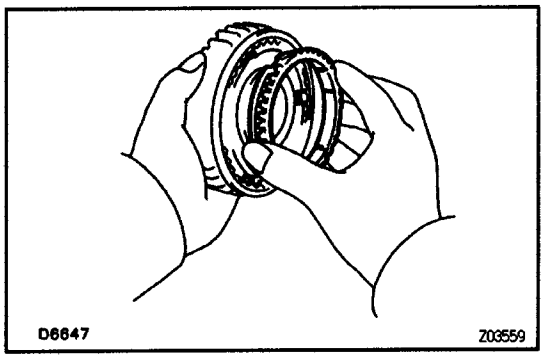

6. INSTALL 2ND GEAR AND REVERSE GEAR

(a) Apply gear oil to the shaft and needle roller bearing.

(b) Place the synchronizer ring on the gear and align the ring slots with the shifting keys.

(c) Install the needle roller bearing in the 2nd gear.

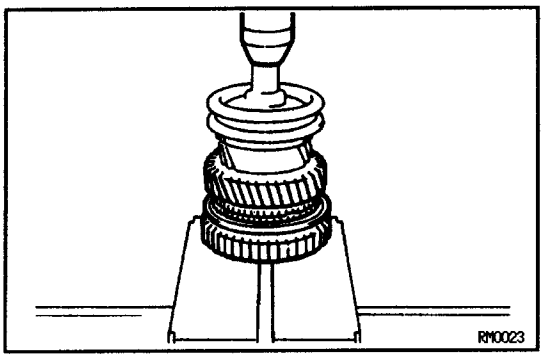

(d) Using a press, install the 2nd gear assembly and reverse gear assembly.

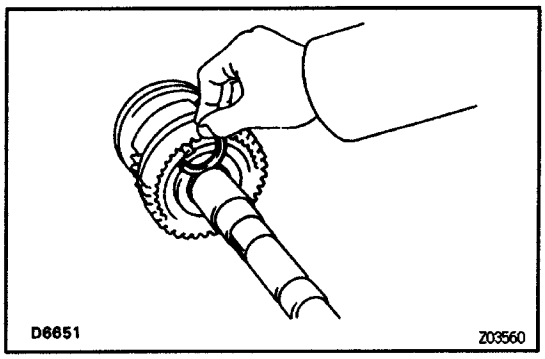

7. INSTALL SNAP RING

(a) Select a snap ring that will allow minimum axial play.

Mark	Thickness mm (in.)
A	2.30 – 2.35 (0.0906 – 0.0925)
B	2.35 – 2.40 (0.0925 – 0.0945)
C	2.40 – 2.45 (0.0945 – 0.0965)
D	2.45 – 2.50 (0.0965 – 0.0984)
E	2.50 – 2.55 (0.0984 – 0.1004)
F	2.55 – 2.60 (0.1004 – 0.1024)
G	2.60 – 2.65 (0.1024 – 0.1043)

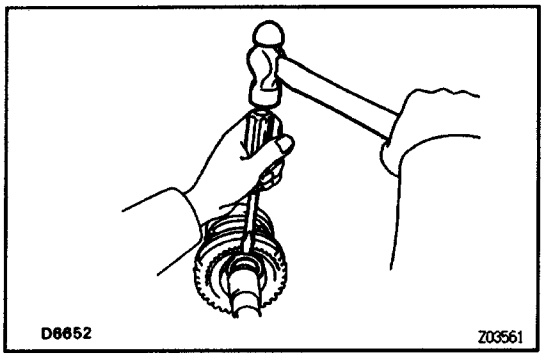

(b) Using a screwdriver and hammer, install the snap ring.

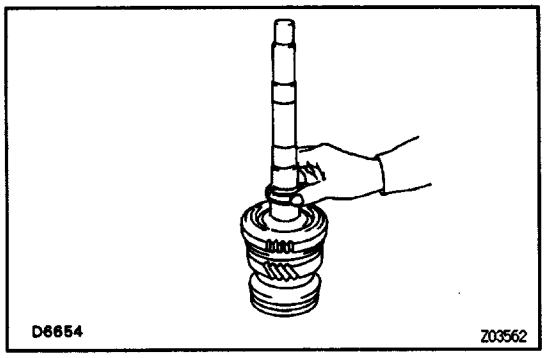

8. INSTALL SPACER AND 1ST GEAR ASSEMBLY

(a) Install the spacer on the output shaft.

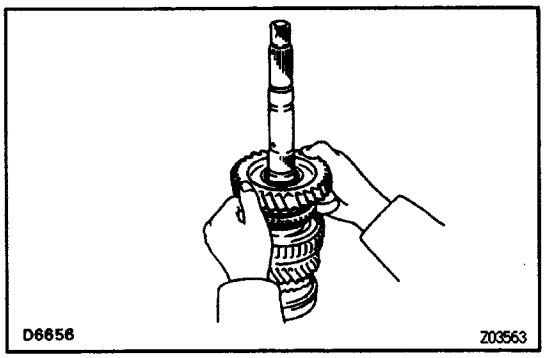

(b) Apply gear oil to the needle roller bearing.
(c) Assemble the 1st gear, synchronizer ring and needle roller bearing.
(d) Install the assembly on the output shaft with the synchronizer ring slots aligned with the shifting keys.

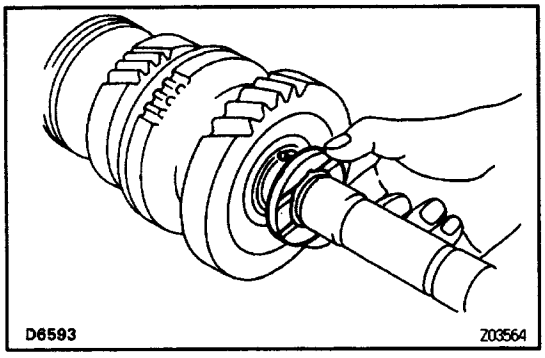

9. INSTALL STRAIGHT PIN AND 1ST GEAR THRUST WASHER

Install the 1st gear thrust washer onto the output shaft with the straight pin aligned with the 1 st gear thrust washer.

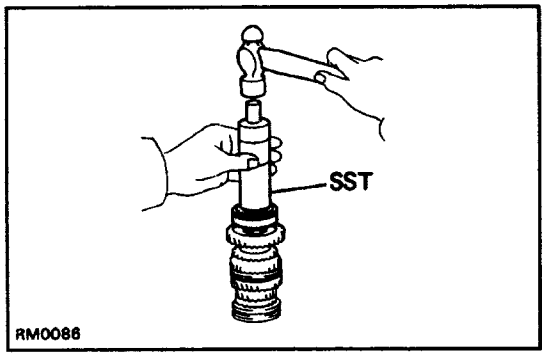

10. INSTALL OUTPUT SHAFT CENTER BEARING

Using SST and a hammer, drive in the bearing with the outer race snap ring groove toward the rear.
SST 09316–60010 (09316–00010, 09316–00070)

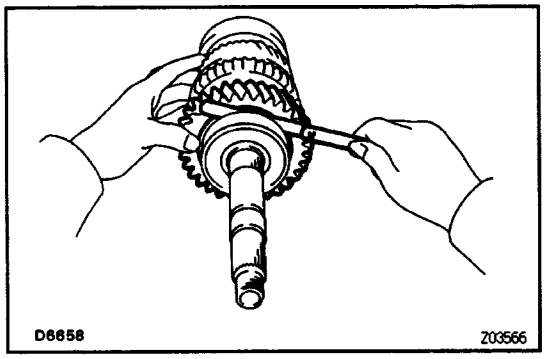

11. INSPECT 1 ST GEAR THRUST CLEARANCE

Using a feeler gauge, measure the 1 st gear clearance.

Standard clearance:

0.10 – 0.45 mm (0.0039 – 0.0177 in.)

Maximum clearance:

0.50 mm (0.0197 in.)

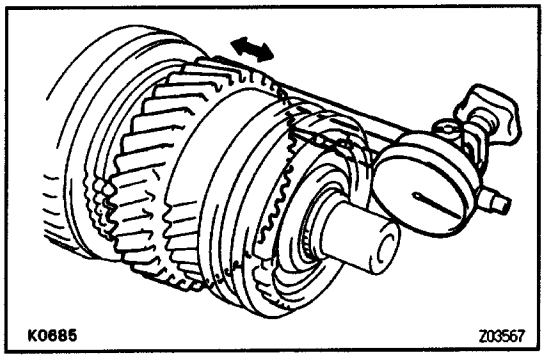

12. INSPECT 2ND GEAR THRUST CLEARANCE

Using a dial indicator, measure the 2nd gear thrust clearance.

Standard clearance:

0.10 – 0.25 mm (0.0039 – 0.0098 in.)

Maximum clearance:

0.30 mm (0.0118 in.)

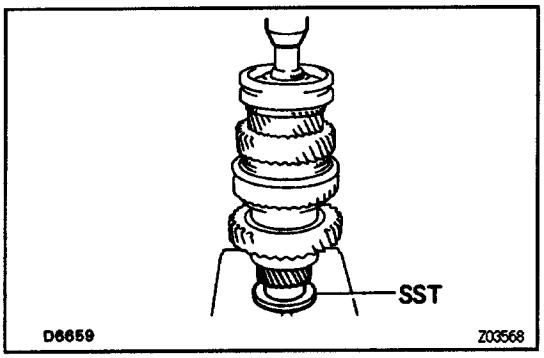

13. INSTALL 5TH GEAR

Using SST and a press, install the 5th gear.

SST 09316–60010 (09316–00030)

TROUBLESHOOTING

Use the table below to help you find the cause of the problem. The numbers indicate the priority of the likely cause of the problem. Check each part in order. If necessary, replace these parts.

See Page / Parts Name / Trouble	–	MT2–2	–	MT2–16	MT2–16	–	–	MT2–16	MT2–16	MT2–17	MT2–17	MT2–25, 27,36 1)	MT2–27, 36			
	Oil (Level low)	Oil (Wrong)	Oil (Level too high)	Gasket (Damaged)	Oil seal (Worn or damaged)	O–Ring (Worn or damaged)	Control cable (Faulty)	Locking ball spring (Damaged)	Shift fork (Worn)	Gear (Worn or damaged)	Bearing (Worn or damaged)	Synchronizer ring (Worn or damaged)!	Shifting key spring (Damaged)			
Noise	1	2								3	3					
Oil leakage			1	2	2	3										
Hard to shift or will not shift							1					2	3			
Jumps out of gear								1	2	3	3					

PRECAUTION

When working with FIPG material, you must observe the following.

- Using a razor blade and gasket scraper, remove all the old FIPG material from the gasket surfaces.
- Thoroughly clean all components to remove all the loose material.
- Clean both sealing surfaces with a non–residue solvent.
- Apply the FIPG in an approx.1 mm (0.04 in.) wide bead along the sealing surface.
- Parts must be assembled within 10 minutes of application. Otherwise, the FIPG material must be removed and reapplied.

PREPARATION

SST (SPECIAL SERVICE TOOLS)

	09316–60010 Transmission & Transfer Bearing Replacer	
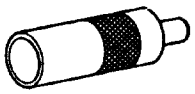	(09316–00010) Replacer Pipe	Gear spline piece No.5
	(09316–00030) Replacer 'B'	5th gear
	(09316–00070) Replacer 'F'	Output shaft rear bearing
	09325–12010 Transmission Oil Plug	Transfer adaptor oil seal
	09506–35010 Differential Drive Pinion Rear Bearing Replacer	Input shaft bearing
	09608–12010 Front Hub & Drive Pinion Bearing Replacer Set	Counter rear bearing
	(09608–00020) Remover & Replacer Handle	
	(09608–00050) Drive Pinion Front Bearing Cup Replacer	
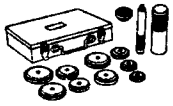	09608–35014 Axle Hub & Drive Pinion Bearing Tool Set	Front bearing retainer oil seal
	(09608–06020) Handle	
	(09608–06090) Front Nub Outer & Steering Worm Bearing Replacer	
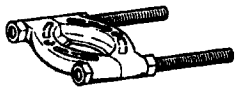	09950–00020 Bearing Remover	

	**09950–40010** Puller B Set	
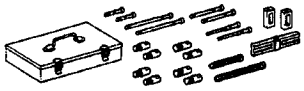	**09950–50010** Puller C Set	

RECOMMENDED TOOLS

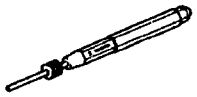	09031–00030 Pin Punch .	
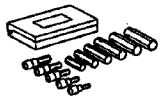	09040–00010 Hexagon Wrench Set.	
	09042–00020 Tom Socket T40.	
	09905–00012 Snap Ring No.1 Expander.	

EQUIPMENT

Calipers	
Dial indicator	
Micrometer	
Torque wrench	
Feeler gauge	
Magnetic finger	

LUBRICANT

Item	Capacity	Classification
Manual transmission oil	2.2 liters (2.3 US qts, 1.9 Imp. qts)	API GL–3, GL–4 or GL–5 SAE 75W–90

SSM (SPECIAL SERVICE MATERIALS)

	08826–00090 Seal Packing 1281, THREE BOND 1281 or equivalent (FIPG)	Intermediate plate x Transmission case Front bearing retainer x Transmission case
	08833–00080 Adhesive 1344, THREE BOND 1344, LOCTITE 242 or equivalent	Straight screw plug Shift lever housing set bolt Front bearing retainer set bolt

SERVICE SPECIFICATIONS

SERVICE DATA

Output shaft 1st gear journal diameter	Min	38.860 mm (1.5299 in.)
Output shaft 2nd gear journal diameter	Min	46.860 mm (1.8449 in.)
Output shaft 3rd gear journal diameter	Min	37.860 mm (1.4905 in.)
Output shaft flange thickness	Min	4.70 mm (0.1850 in.)
Output shaft runout	Max	0.06 mm (0.0024 in.)
Gear thrust clearance 1st	STD	0.10–0.45 mm (0.0039–0.0177 in.)
	Max	0.50 mm (0.0197 in.)
Gear thrust clearance 2nd	STD	0.10–0.25 mm (0.0039–0.0098 in.)
	Max	0.30 mm (0.0118 in.)
Gear thrust clearance 3rd	STD	0.10–0.25 mm (0.0039–0.0098 in.)
	Max	0.30 mm (0.0118 in.)
Gear radial clearance 1st	STD	0.020–0.073 mm (0.0008–0.0029 in.)
	Max	0.160 mm (0.0063 in.)
Gear radial clearance 2nd	STD	0.015–0.068 mm (0.0006–0.0027 in.)
	Max	0.160 mm (0.0063 in.)
Gear radial clearance 3rd	STD	0.015–0.068 mm (0.0006–0.0027 in.)
	Max	0.160 mm (0.0063 in.)
Shift fork to hub sleeve clearance	Max	1.0 mm (0.039 in.)
Synchronizer ring to gear clearance	Min	0.8 mm (0.031 in.)
Input shaft snap ring thickness		
	Mark A	2.10–2.15 mm (0.0827–0.0846 in.)
	Mark B	2.15–2.20 mm (0.0846–0.0866 in.)
	Mark C	2.20–2.25 mm (0.0866–0.0886 in.)
	Mark D	2.25–2.30 mm (0.0886–0.0906 in.)
	Mark E	2.30–2.35 mm (0.0906–0.0925 in.)
	Mark F	2.35–2.40 mm (0.0925–0.0945 in.)
	Mark G	2.40–2.45 mm (0.0945–0.0965 in.)
Output shaft snap ring thickness Clutch hub No.1		
	Mark A	2.30–2.35 mm (0.0906–0.0925 in.)
	Mark B	2.35–2.40 mm (0.0925–0.0945 in.)
	Mark C	2.40–2.45 mm (0.0945–0.0965 in.)
	Mark D	2.45–2.50 mm (0.0965–0.0984 in.)
	Mark E	2.50–2.55 mm (0.0984–0.1004 in.)
	Mark F	2.55–2.60 mm (0.1004–0.1024 in.)
	Mark G	2.60–2.65 mm (0.1024–0.1043 in.)
Output shaft snap ring thickness Clutch hub No.2		
	Mark A	1.80–1.85 mm (0.0709–0.0728 in.)
	Mark B	1.85–1.90 mm (0.0728–0.0748 in.)
	Mark C	1.90–1.95 mm (0.0748–0.0768 in.)
	Mark D	1.95–2.00 mm (0.0768–0.0787 in.)
	Mark E	2.00–2.05 mm (0.0787–0.0807 in.)
	Mark F	2.05–2.10 mm (0.0807–0.0827 in.)
	Mark G	2.10–2.15 mm (0.0827–0.0846 in.)

Output shaft snap ring thickness Rear	Mark A	2.65–2.70 mm (0.1043–0.1063 in.)
	Mark B	2.70–2.75 mm (0.1063–0.1083 in.)
	Mark C	2.75–2.80 mm (0.1083–0.1102 in.)
	Mark D	2.80–2.85 mm (0.1102–0.1122 in.)
	Mark E	2.85–2.90 mm (0.1122–0.1142 in.)
	Mark F	2.90–2.95 mm (0.1142–0.1161 in.)
	Mark G	2.95–3.00 mm (0.1161–0.1181 in.)
	Mark H	3.00–3.05 mm (0.1181–0.1201 in.)
	Mark J	3.05–3.10 mm (0.1201–0.1220 in.)
	Mark K	3.10–3.15 mm (0.1220–0.1240 in.)
	Mark L	3.15–3.20 mm (0.1240–0.1260 in.)
	Mark M	3.20–3.25 mm (0.1260–0.1280 in.)
	Mark N	3.25–3.30 mm (0.1280–0.1299 in.)
	Mark P	3.30–3.35 mm (0.1299–0.1319 in.)
	Mark Q	3.35–3.40 mm (0.1319–0.1339 in.)
	Mark R	3.40–3.45 mm (0.1339–0.1358 in.)
	Mark S	3.45–2.50 mm (0.1358–0.1378 in.)
Counter gear roller bearing journal diameter	Min	27.860 mm (1.0968 in.)
Counter 5th gear thrust clearance	STD	0.10–0.35 mm (0.0039–0.0138 in.)
	Max	0.40 mm (0.0157 in.)
Counter 5th radial clearance	STD	0.015–0.068 mm (0.0006–0.0027 in.)
	Max	0.16 mm (0.0063 in.)
Reverse idler gear radial clearance	STD	0.040–0.082 mm (0.0016–0.0032 in.)
	Max	0.13 mm (0.0051 in.)
Reverse idler gear to shift arm clearance	STD	0.05–0.35 mm (0.0020–0.0138 in.)
	Max	0.50 mm (0.0197 in.)
Counter gear snap ring thickness Front	Mark A	2.00–2.05 mm (0.0787–0.0807 in.)
	Mark B	2.05–2.10 mm (0.0807–0.0827 in.)
	Mark C	2.10–2.15 mm (0.0827–0.0846 in.)
	Mark D	2.15–2.20 mm (0.0846–0.0866 in.)
	Mark E	2.20–2.25 mm (0.0866–0.0886 in.)
	Mark F	2.25–3.00 mm (0.0886–0.1181 in.)
Counter gear snap ring thickness Rear	Mark A	2.80–2.85 mm (0.1102–0.1122 in.)
	Mark B	2.85–2.90 mm (0.1122–0.1142 in.)
	Mark C	2.90–2.95 mm (0.1142–0.1161 in.)
	Mark D	2.95–3.00 mm (0.1161–0.1181 in.)
	Mark E	3.00–3.05 mm (0.1181–0.1201 in.)
	Mark F	3.05–3.10 mm (0.1201–0.1220 in.)
	Mark G	3.10–3.15 mm (0.1220–0.1240 in.)
Front bearing retainer oil seal drive in depth		11.2–12.2 mm (0.441–0.480 in.)

TORQUE SPECIFICATIONS

Part tightened	N·m	kgf·cm	ft·lbf
Reverse shift arm bracket set bolt	18	185	13
Rear bearing retainer x Intermediate plate	18	185	13
Shift fork x Shift fork shaft	20	200	14
Straight screw plug	19	190	14
Front bearing retainer x Transmission case	17	170	12
Transmission case x Transfer adaptor	37	380	27
Shift lever housing set bolt	38	390	28
Clutch housing x Transmission case	36	370	27
Oil receiver x Extension housing	11	115	8
Back–up light switch	44	450	32
Restrict pin	37	380	27
Shift lever retainer x Transfer adaptor	18	185	13
Filler and drain plug	37	380	27
Transmission x Engine	72	730	53
Engine rear mounting x Transmission	25	260	19
Crossmember x Body	95	970	70
Engine rear mounting x Crossmember	13	130	9
Stabilizer bracket set bolt	30	306	22
Stiffener plate x Engine	37	380	27
Stiffener plate x Transmission	37	380	27
Front exhaust pipe x Exhaust manifold	62	630	46
Front exhaust– pipe x Rear exhaust pipe	39	400	29
Exhaust pipe bracket x Clutch housing	39	400	29
Exhaust pips clamp bolt	19	195	14
Starter x Transmission	39	400	29
Clutch release cylinder x Transmission	12	120	9
Engine under cover	29	300	22

TRANSFER ADAPTOR

COMPONENTS

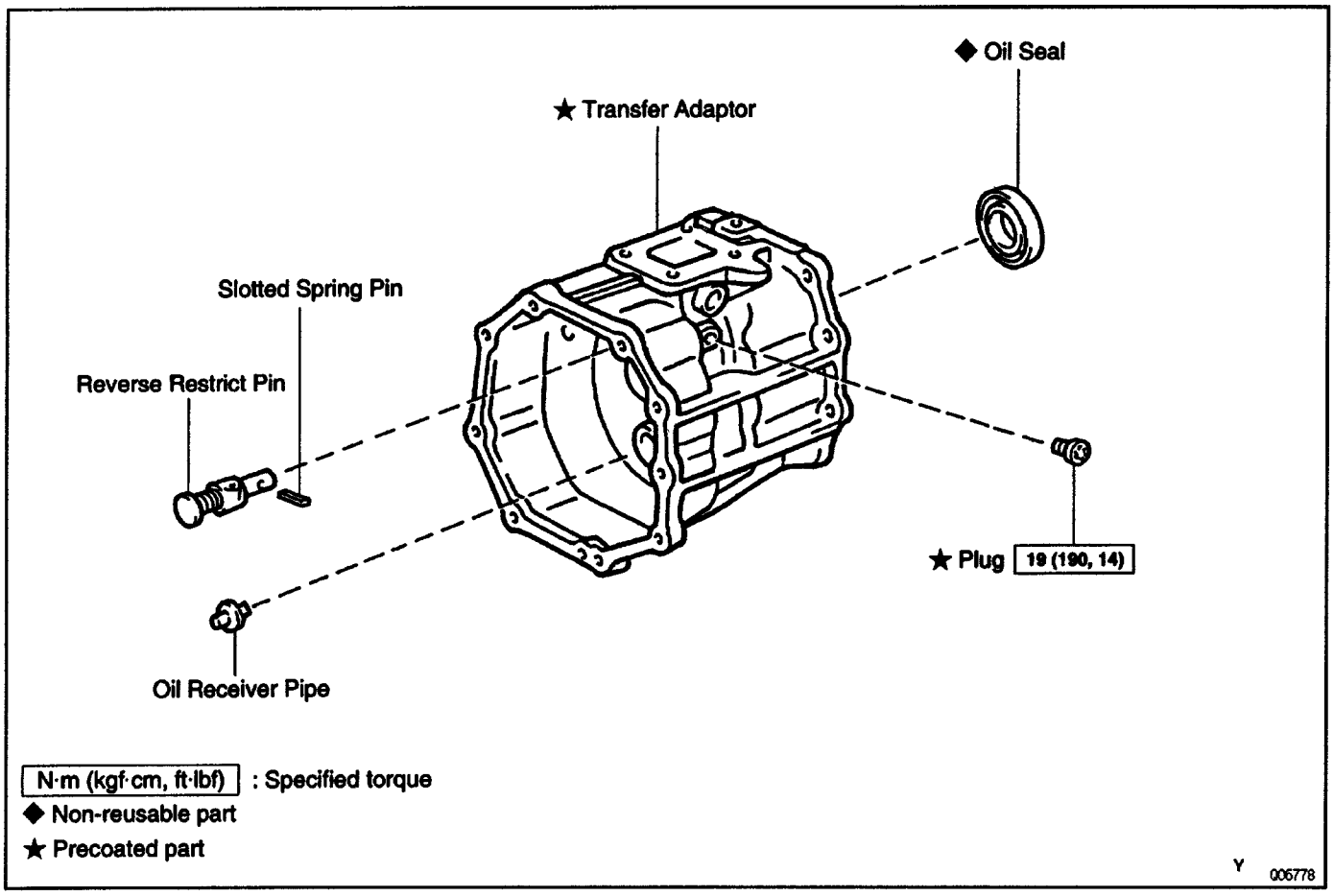

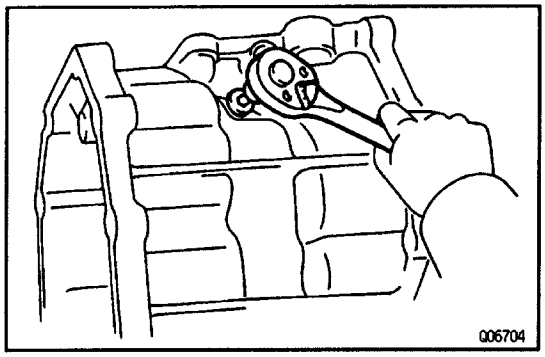

REVERSE RESTRICT PIN REPLACEMENT

1. REMOVE REVERSE RESTRICT PIN

(a) Using a torx socket wrench, remove the screw plug.
(Torx socket wrench T40 09042–00020)

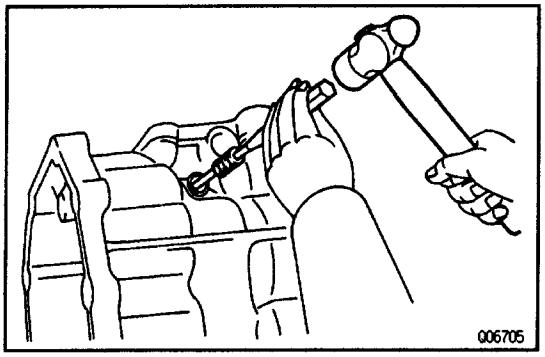

(b) Using a pin punch and hammer, drive out the slotted spring pin.

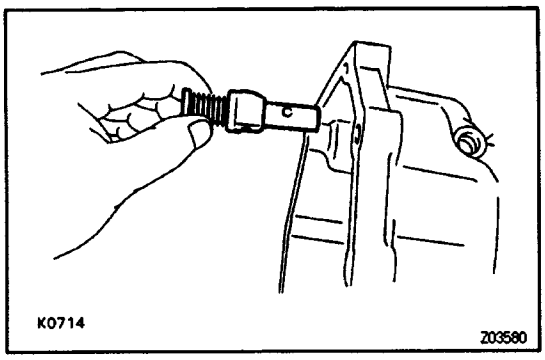

(c) Remove the reverse restrict pin.

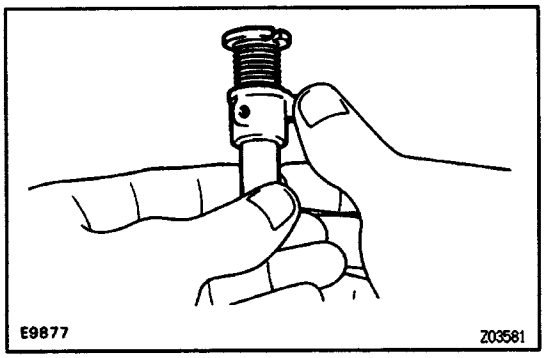

2. REVERSE RESTRICT PIN INSPECTION

Turn and push the reverse restrict pin by hand.
Check for smooth operation.

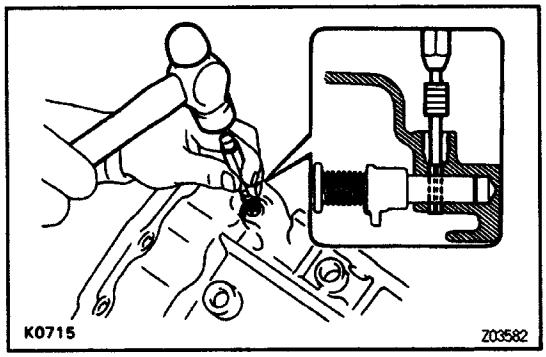

3. INSTALL REVERSE RESTRICT PIN

(a) Install the reverse restrict pin to the transfer adaptor.
(b) Using a pin punch and hammer, drive in the slotted spring pin, as shown.

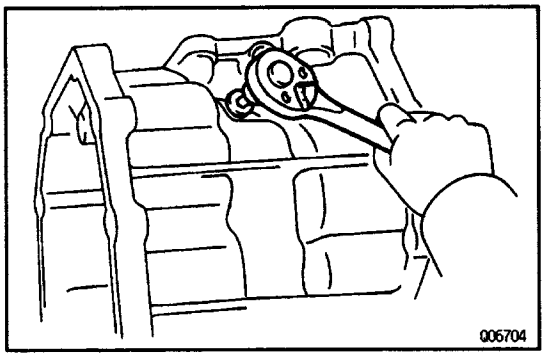

(c) Apply sealant to the plug threads.
Sealant: Part No.08833–00080, THREE BOND 1344, LOCTITE 242 or equivalent
(d) Using a torx socket wrench, install and torque the screw plug.
(Torx socket wrench T40 09042–00020)
Torque: 19 N–m (190 kgf–cm, 14 ft–lbf)

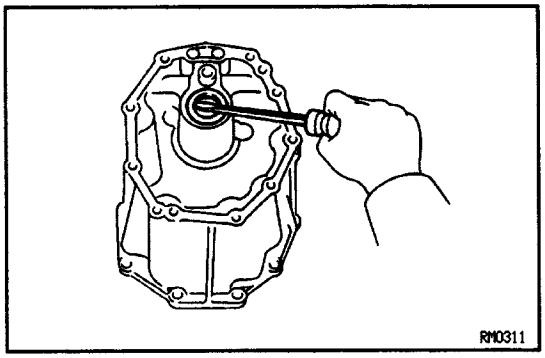

OIL SEAL REPLACEMENT

IF NECESSARY, REPLACE TRANSFER ADAPTOR OIL SEAL

(a) Using a screwdriver, pry out the oil seal.

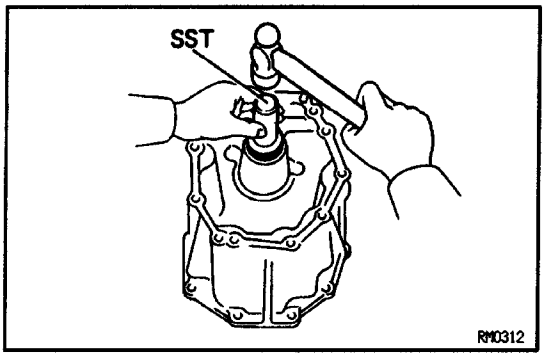

(b) Using SST and a hammer, drive in a new oil seal.
SST 09325–12010

TROUBLESHOOTING

Use the table below to help you find the cause of the problem. The numbers indicate the priority of the likely cause of the problem. Check each part in order. If necessary, replace these parts.

See Page / Parts Name / Trouble	–	MT2–2	–	MT2–16	MT2–16	–	–	MT2–16	MT2–16	MT2–17	MT2–17	MT2–25, 27,36 1)	MT2–27, 36			
	Oil (Level low)	Oil (Wrong)	Oil (Level too high)	Gasket (Damaged)	Oil seal (Worn or damaged)	O–Ring (Worn or damaged)	Control cable (Faulty)	Locking ball spring (Damaged)	Shift fork (Worn)	Gear (Worn or damaged)	Bearing (Worn or damaged)	Synchronizer ring (Worn or damaged)!	Shifting key spring (Damaged)			
Noise	1	2								3	3					
Oil leakage			1	2	2	3										
Hard to shift or will not shift							1					2	3			
Jumps out of gear								1	2	3	3					

PRECAUTION

When working with FIPG material, you must observe the following.

- Using a razor blade and gasket scraper, remove all the old FIPG material from the gasket surfaces.
- Thoroughly clean all components to remove all the loose material.
- Clean both sealing surfaces with a non–residue solvent.
- Apply the FIPG in an approx.1 mm (0.04 in.) wide bead along the sealing surface.
- Parts must be assembled within 10 minutes of application. Otherwise, the FIPG material must be removed and reapplied.

PROPELLER SHAFT

DESCRIPTION

The propeller shafts are designed for 2WD use and 4WD use. The 2WD propeller shaft are the 2 –joint type. For 4WD vehicles, the front propeller shaft propeller shaft and rear propeller shaft are the 2–joint type.

2WD
2-Joint Type

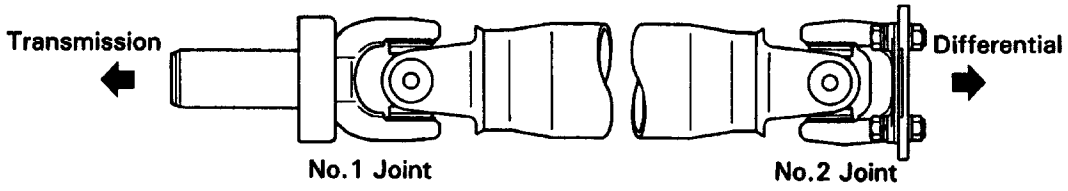

4WD
w/ Boot for 3VZ-FE, 2L-TE Engine Automatic Transmission
Front Propeller Shaft

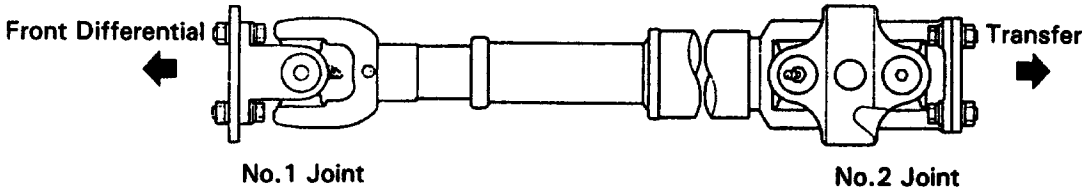

Rear Propeller Shaft

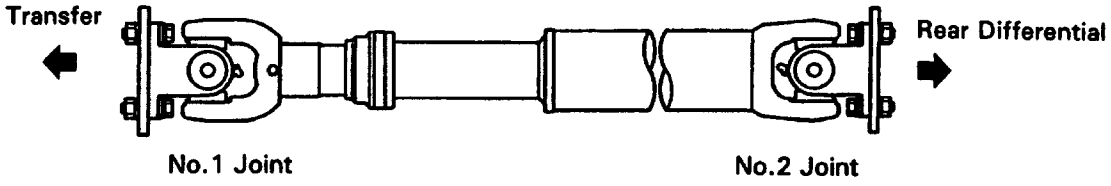

4WD
Others
Front Propeller Shaft

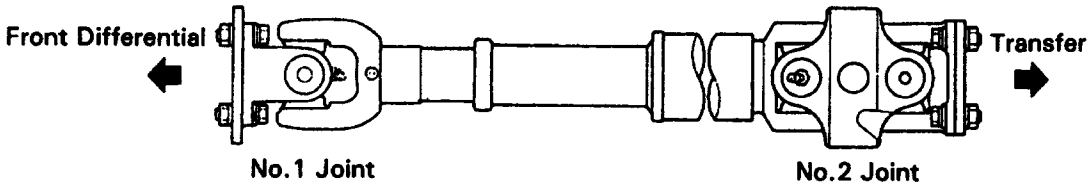

Rear Propeller Shaft

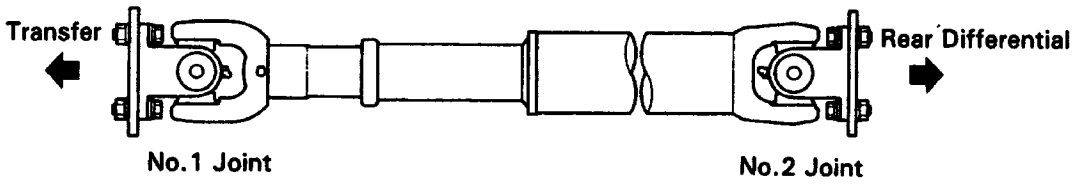

R07577
R07578
R07875
R07578
R07579

Z09681

PRECAUTION

Be careful not to grip the propeller shaft tube too tightly in the vise as this will cause deformation.

TROUBLESHOOTING

Use the table below to help you find the cause of the problem. The numbers indicate the priority of the likely cause of the problem. Check each part in order. If necessary, replace these parts.

See Page / Parts Name / Trouble	Sleeve yoke spline worn (PR–8,10)	Propeller shaft runout (PR–9,10)	Propeller shaft imbalance (–)	Sleeve yoke spline stuck (PR–8,10)	Spider bearing worn or stuck (PR–9)	Transmission extension housing rear bushing worn (–)
Noise	1				2	
Vibration		3	4	2		1

PREPARATION

SST (SPECIAL SERVICE TOOLS)

	**09325–20010** Transmission Oil Plug	22R–E engine
	**09325–40010** Transmission Oil Plug	3VZ–E engine
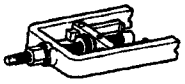	**09332–25010** Universal Joint Bearing Remover & Replacer	

EQUIPMENT

Dial indicator	
Torque wrench	

PROPELLER SHAFT

COMPONENTS

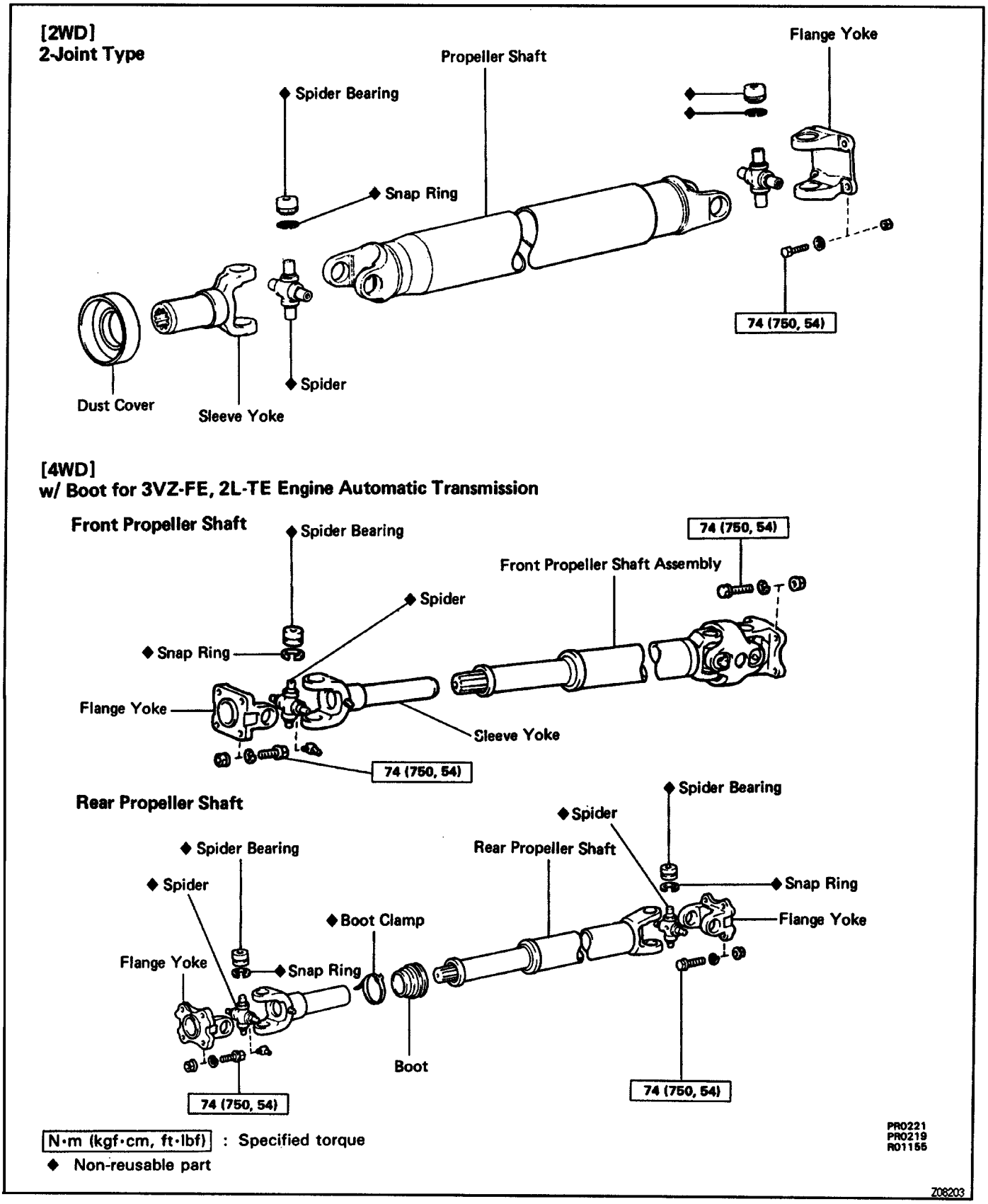

[4WD]
Others
Front Propeller Shaft

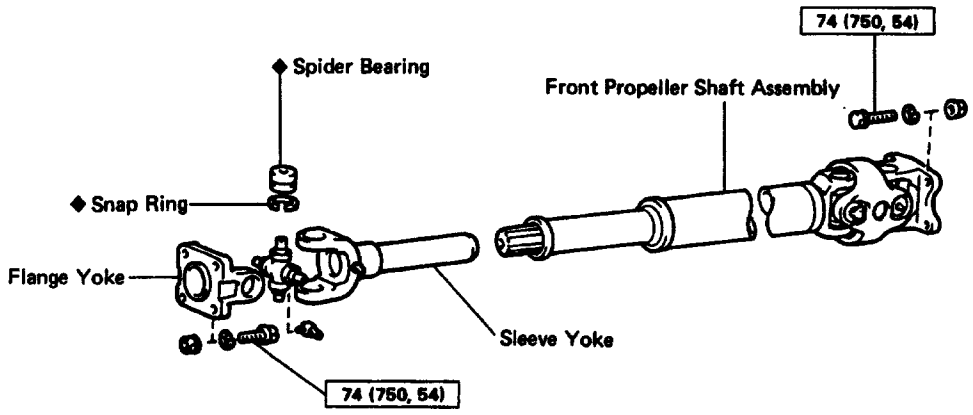

Rear Propeller Shaft

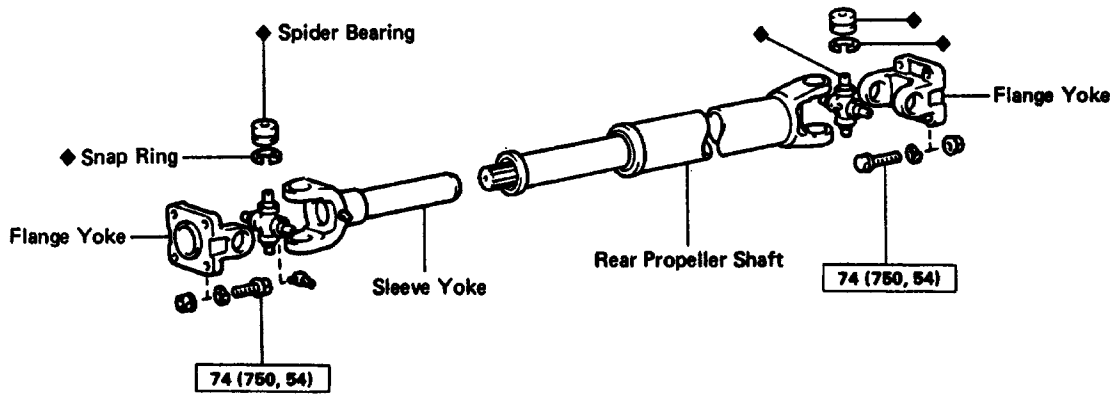

N·m (kgf·cm, ft·lbf) : Specified torque
◆ Non-reusable part

PR0219
PR0220

Z08204

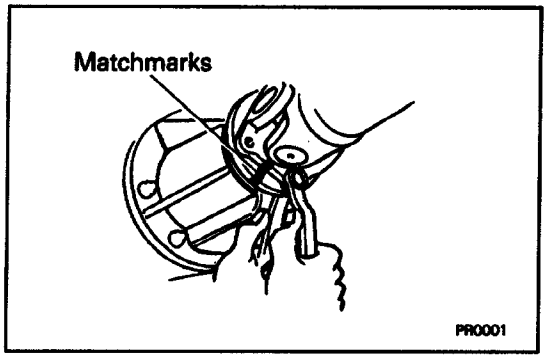

2WD:
PROPELLER SHAFT REMOVAL

1. DISCONNECT PROPELLER SHAFT FLANGE FROM COMPANION FLANGE ON DIFFERENTIAL

(a) Place matchmarks on the flanges.

(b) Remove the 4 bolts and nuts.

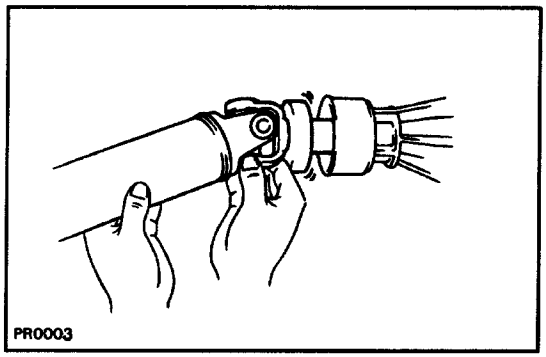

2. REMOVE PROPELLER SHAFT FROM TRANSMIS– SION

(a) Pull the yoke from the transmission.

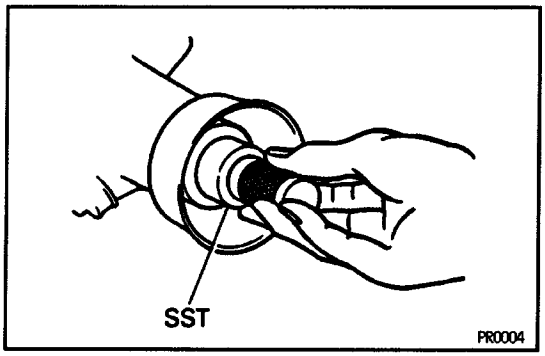

(b) Insert SST in the transmission to prevent oil leakage.

SST 08325–20010 (22R–E engine)

09325–40010 (3VZ–E engine)

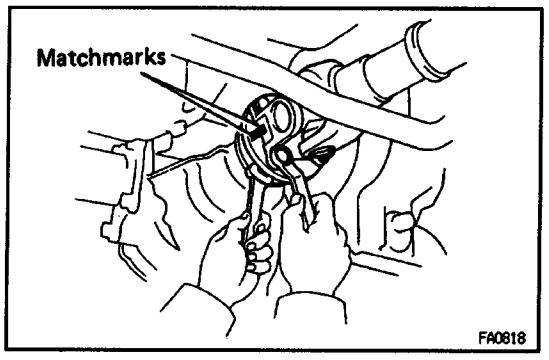

4WD:
PROPELLER SHAFT REMOVAL

1. DISCONNECT PROPELLER SHAFT FLANGE FROM COMPANION FLANGE ON FRONT DIFFERENTIAL

(a) Place matchmarks on the flanges.

(b) Remove the 4 bolts and nuts.

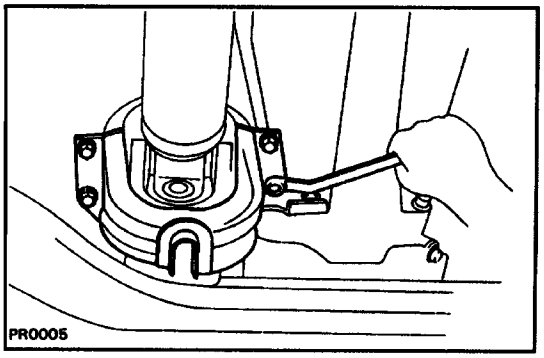

2. REMOVE FRONT PROPELLER SHAFT NO.2 DUST COVER

w/ A.D.D. and 3VZ – E engine:

Remove the 2 bolts, nuts and cover.

Other:

Remove the 4 bolts and cover.

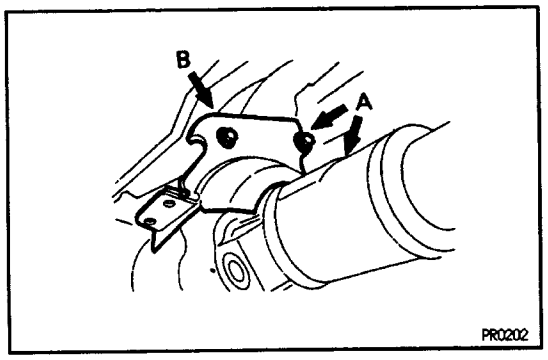

3. 3VZ– E and 22R– E w/ A.D.D.:

REMOVE FRONT PROPELLER SHAFT DUST COVER SUBASSEMBLY

Remove the 3 bolts and cover.

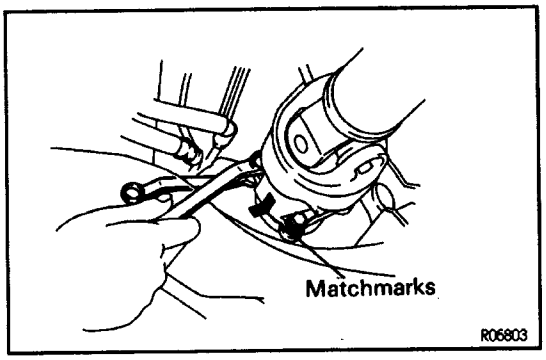

4. REMOVE FRONT PROPELLER SHAFT

(a) Suspend the front side of the propeller shaft.
(b) Place matchmarks on the flanges.
(c) Remove the 4 nuts.
(d) Remove the front propeller shaft.

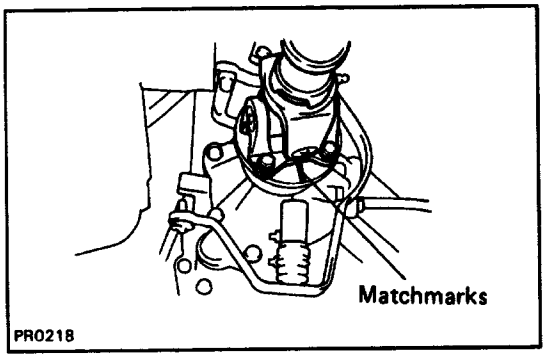

5. DISCONNECT PROPELLER SHAFT FLANGE FROM COMPANION FLANGE ON TRANSFER

(a) Place matchmarks on the flanges.
(b) Remove the 4 bolts and nuts.

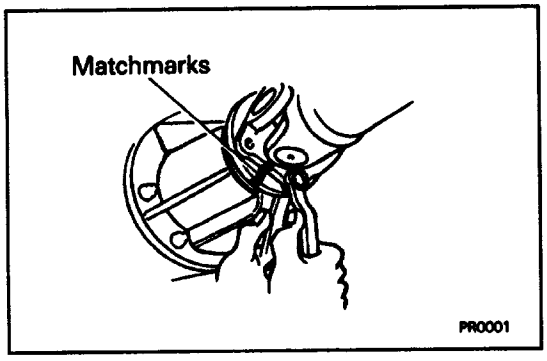

6. 4WD:

REMOVE REAR PROPELLER SHAFT

(a) Place matchmarks on the flanges.
(b) Remove the 4 bolts and nuts.
(c) Remove the rear propeller shaft.

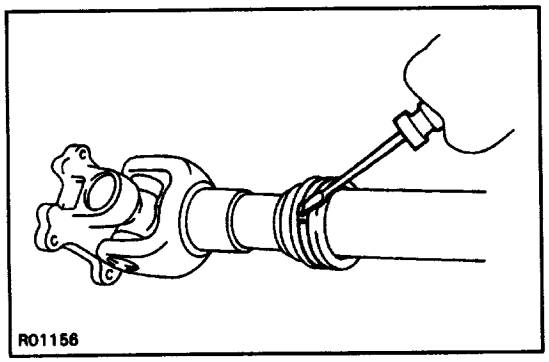

4WD:
PROPELLER SHAFT DISASSEMBLY

1. w/ Boot 3VZ–FE, 22R–E Engine Automatic Transmission:

REMOVE SLEEVE YOKE FROM REAR PROPELLER SHAFT

(a) Using a screwdriver, remove the boot clamp.

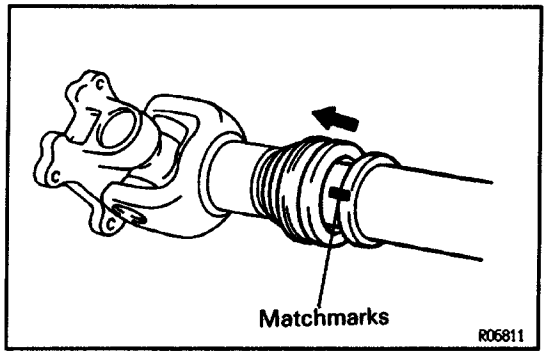

(b) Slide the boot to sleeve yoke.
(c) Place matchmarks on the sleeve yoke and shaft.
NOTICE: Be careful not to damage the boot.

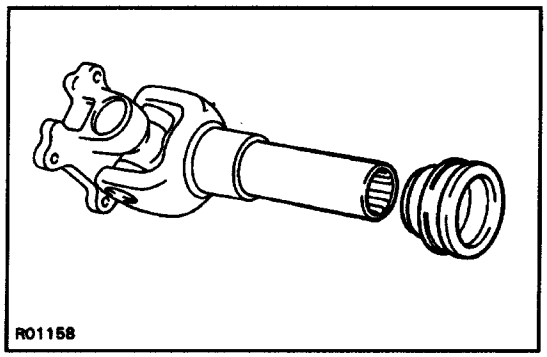

(d) Pull out the sleeve yoke from the shaft.
(e) Remove the boot.

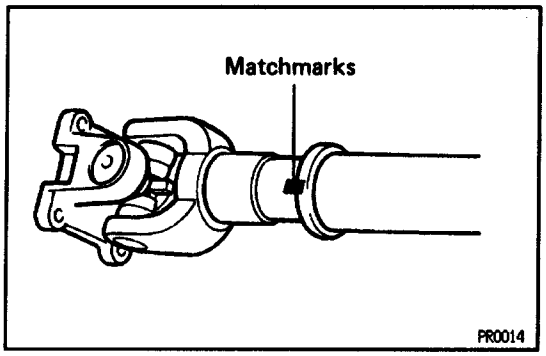

2. 4WD:

REMOVE SLEEVE YOKE FROM PROPELLER SHAFT

(a) Place matchmarks on the sleeve yoke and shaft.
(b) Pull out the sleeve yoke from the shaft.

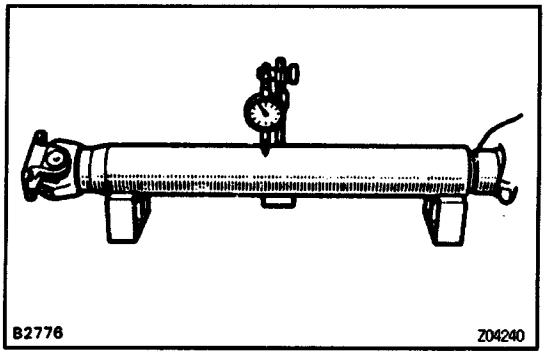

PROPELLER SHAFT INSPECTION COMPONENTS

1. INSPECT REAR PROPELLER SHAFT FOR DAMAGE OR RUNOUT

If shaft runout is greater than maximum, replace the shaft.

Maximum runout:

0.8 mm (0.031 In.)

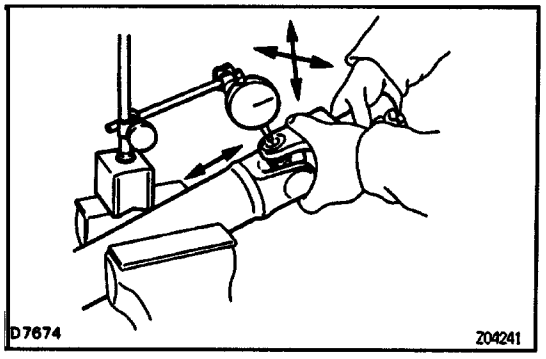

2. INSPECT SPIDER BEARINGS

(a) Inspect the spider bearings for wear or damage.
(b) Using a dial indicator, check the spider bearing axial play by turning the yoke while holding the shaft tightly.

Bearing axial play:

Maximum 0.05 mm (0.0020 in.)

If necessary, replace the spider bearing.

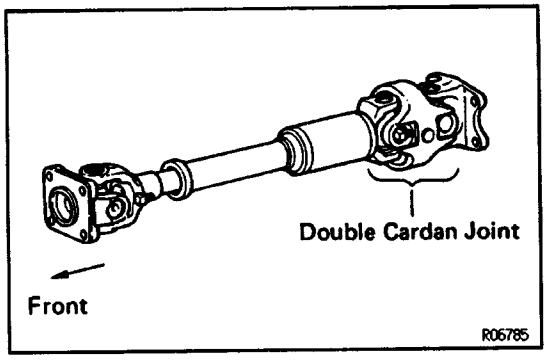

3. 4WD:

INSPECT FRONT PROPELLER SHAFT

(a) Inspect the shaft for wear or damage.

(b) Inspect the double cardan joint for wear or damage.

HINT: If any problem is found, replace the propeller shaft assembly.

SPIDER BEARING REPLACEMENT

1. PLACE MATCHMARKS ON SHAFT AND YOKE

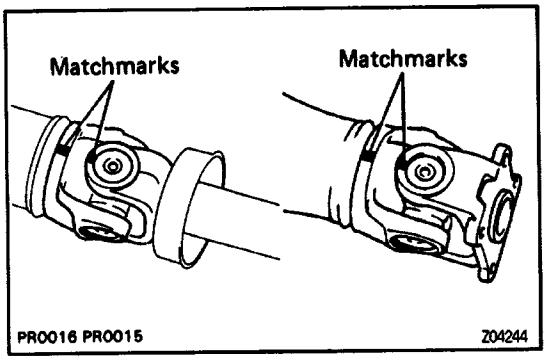

2. REMOVE SNAP RINGS

(a) Using a brass bar and hammer, slightly tap in the bearing outer races.

(b) Using 2 screwdrivers, remove the 4 snap rings front the grooves.

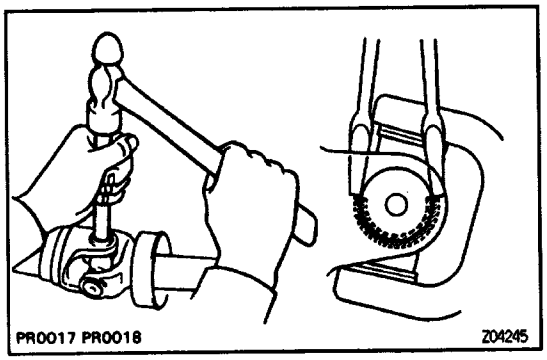

3. REMOVE SPIDER BEARINGS

(a) Using SST, push out the bearing from the propelle shaft.

SST 09332–25010

HINT: Sufficiently raise the part indicated by A so that it does not come into contact with the bearing.

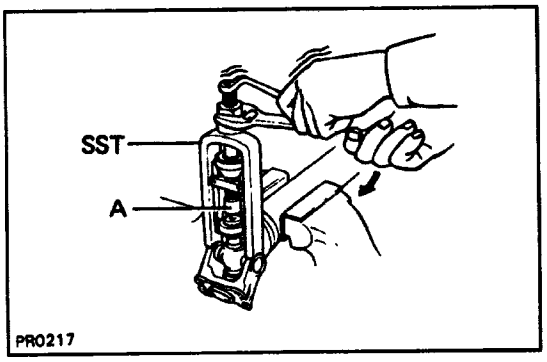

(b) Clamp the bearing outer race in a vise and tap off the propeller shaft with a hammer.

HINT: Remove the bearing on the opposite side in th same procedure.

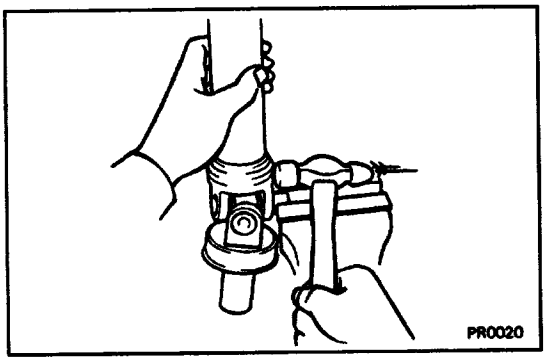

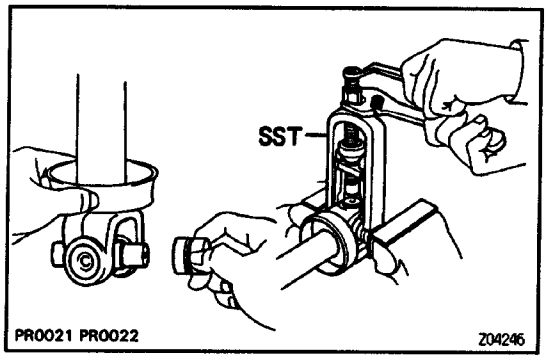

(c) Install the 2 removed bearings outer races to the spider.
(d) Using SST, push out the bearing from the yoke.
SST 09332–25010

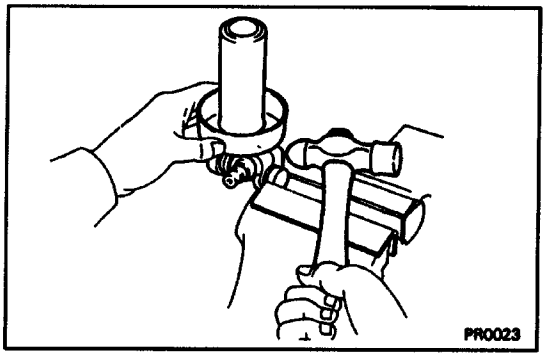

(e) Clamp the outer bearing race in a vise and tap off the yoke with a hammer.
HINT: Remove the bearing on the opposite side in the same procedure.

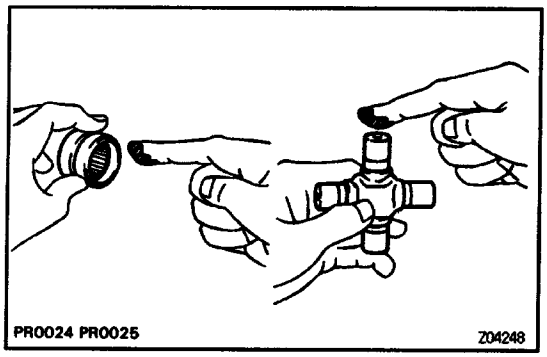

4. INSTALL SPIDER BEARINGS

(a) Apply MP grease to a new spider and 4 new bearings.
NOTICE: Be careful not to apply too much grease.

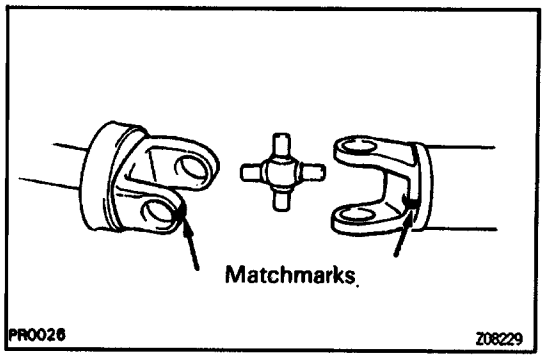

(b) Align the matchmarks on the yoke and shaft.

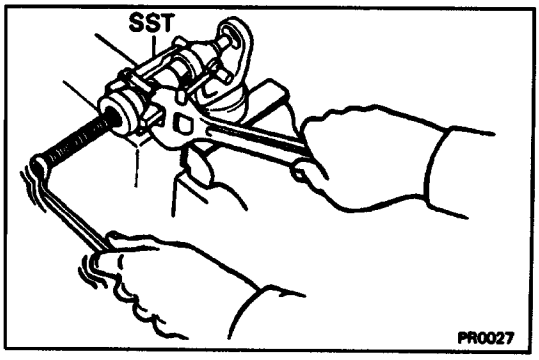

(c) Fit a spider into the yoke.
(d) Using SST, install the 2 bearings on the spider.
SST 09332–25010
HINT: Install the 2 bearings on the opposite side in the same procedure.

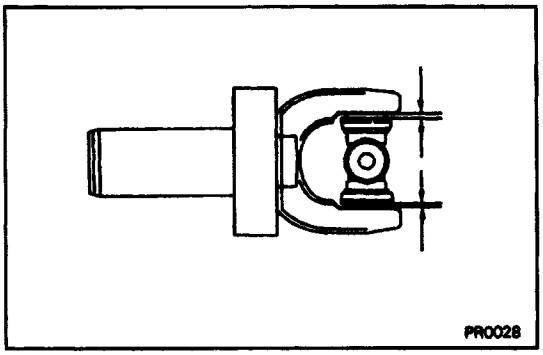

HINT: Adjust both bearings so that the snap ring grooves are at maximum and equal widths.

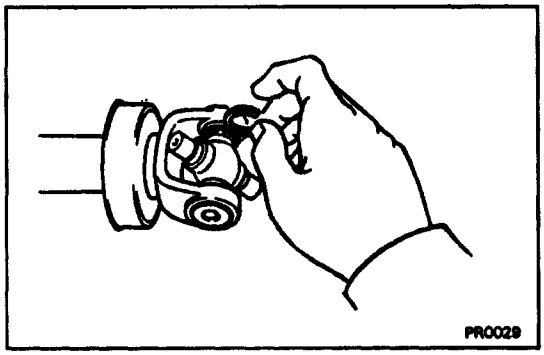

5. INSTALL SNAP RINGS

(a) Select 2 new snap rings of equal thickness which will allow 0–0.05 mm (0–0.0020 in.) axial play.

HINT: Do not reuse the 2 snap rings.

Thickness of snap ring:

Color	Mark	Thickness mm (in.)
–	1	2.100 – 2.150 (0.0827 – 0.0846)
–	2	2.150 – 2.200 (0.0846 – 0.0866)
–	3	2.200 – 2.250 (0.0866 – 0.0886)
Brown	–	2.250 – 2.300 (0.0886 – 0.0906)
Blue	–	2.300 – 2.350 (0.0906 – 0.0925)
–	6	2.350 – 2.400 (0.0925 – 0.0945)
–	7	2.400 – 2.450 (0.0945 – 0.0965)
–	8	2.450 – 2.500 (0.0965 – 0.0984)

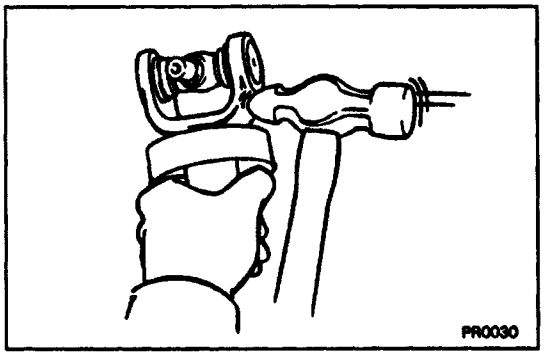

(b) Using a hammer, tap the yoke until there is no clearance between the bearing outer race and snap ring.

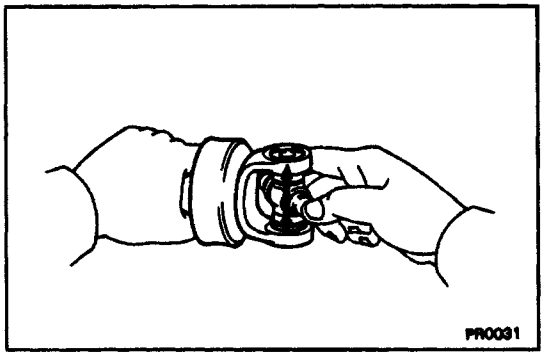

6. CHECK SPIDER BEARING

(a) Check that the spider bering moves smoothly.

(b) Check the spider bearing axial play.

Bearing axial play:

Maximum 0.05 mm (0.020 in.)

HINT: Install spider bearings on the shaft side using the procedure described above.

HINT: When replacing the rear and front propeller shaft spider on 4WD vehicles, be sure that the grease fitting assembly hole is facing in the direction shown in the illustration.

SPIDER GREASE FITTING ASSEMBLY DIRECTION FOR 4WD REAR PROPELLER SHAFT

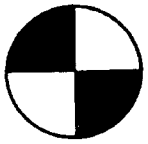

The figure at left show: the locations of the grease fittings as seen from the rear.

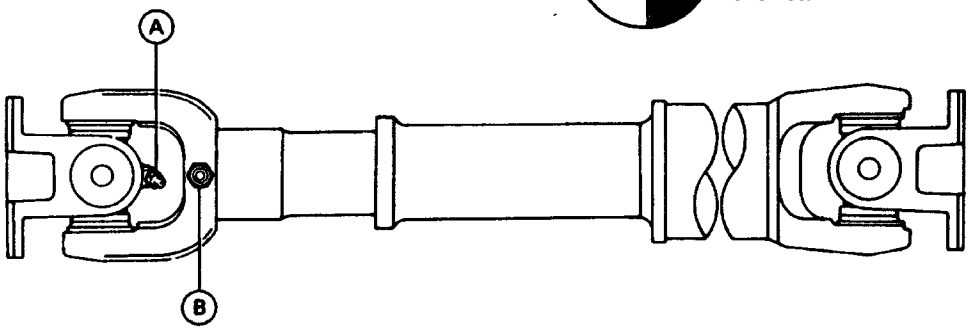

SPIDER GREASE FITTING ASSEMBLY DIRECTION FOR 4WD FRONT PROPELLER SHAFT

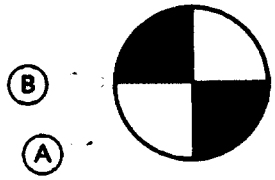

The figure at left shows the locations of the grease fittings as seen from the rear.

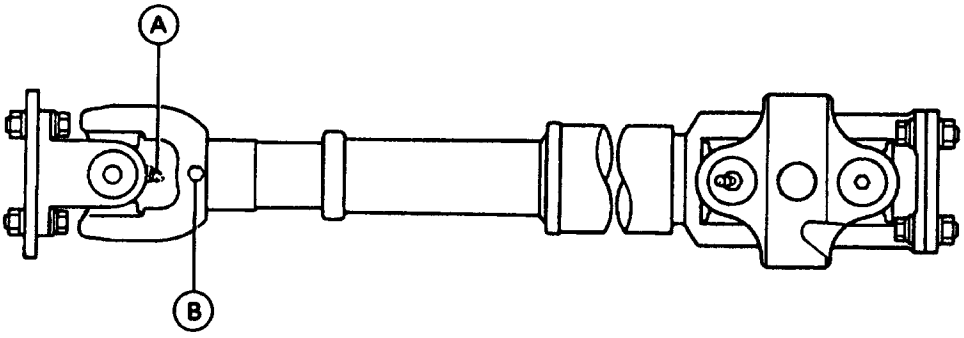

PROPELLER SHAFT ASSEMBLY

When removing or installing and part, make sure that each joint is facing the correct direction, as shown in the illustration above.

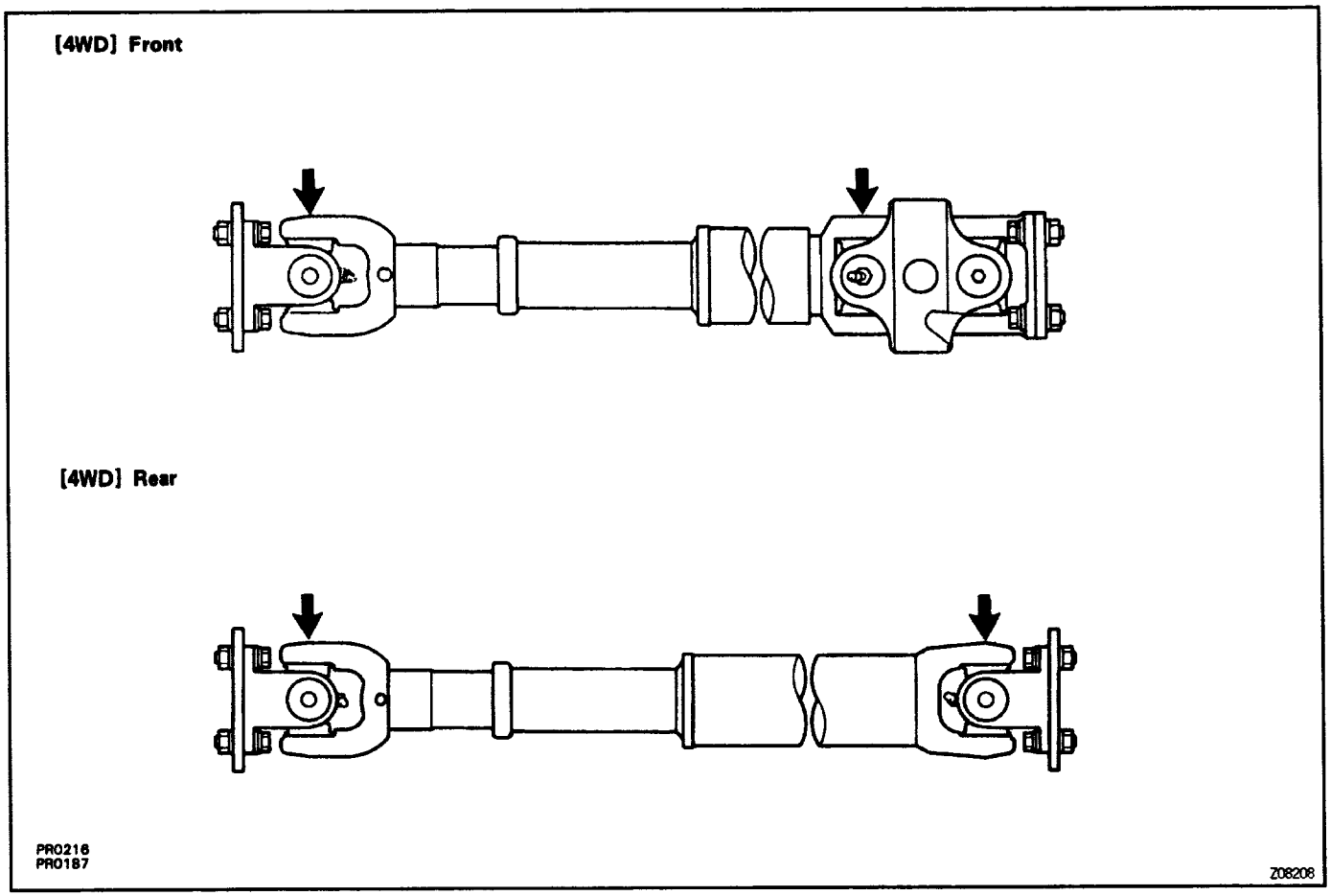

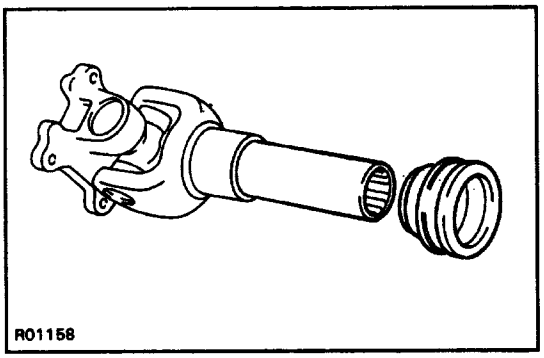

1. w/ Boot for 3 VZ – FE, 2 L – TE Engine Automatic Transmission:

INSERT SLEEVE YOKE INTO PROPELLER SHAFT

(a) Insert the boot to sleeve yoke.

NOTICE: Be careful not to damage the boot.

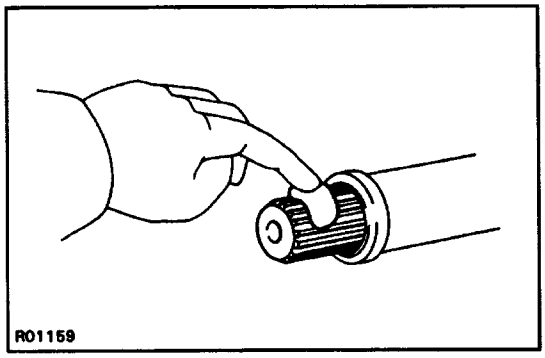

(b) Apply MP grease to the propeller shaft spline.

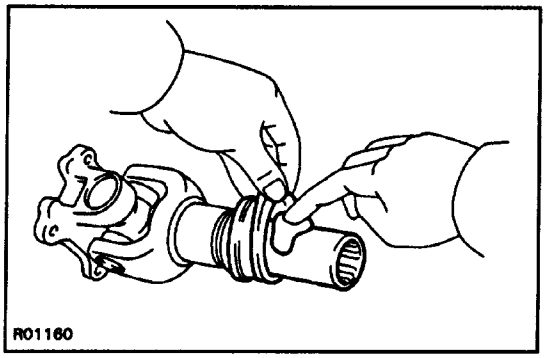

(c) Pack in MP grease to the sleeve yoke sliding surface and boot.

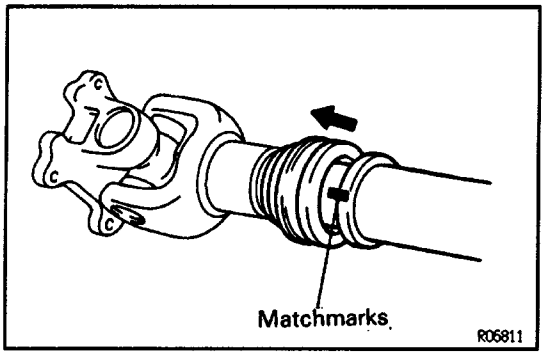

(d) Align the matchmarks on the sleeve yoke and propeller shaft.
(e) Insert the sleeve yoke into the propeller shaft.

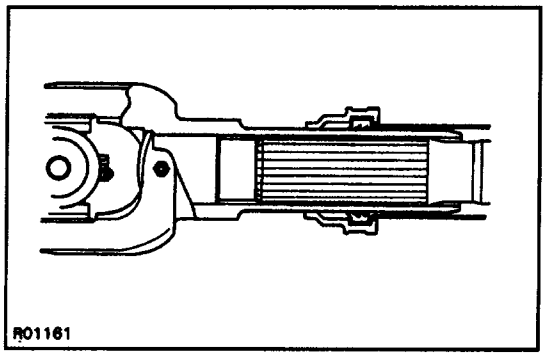

(f) Set the boot, as shown in the illustration.

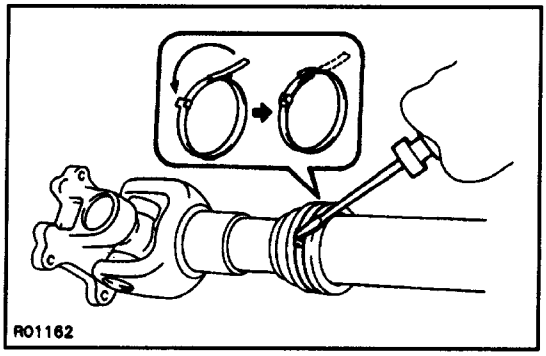

(g) Using screwdriver, bend the clamp and lock it, as shown in the illustration.

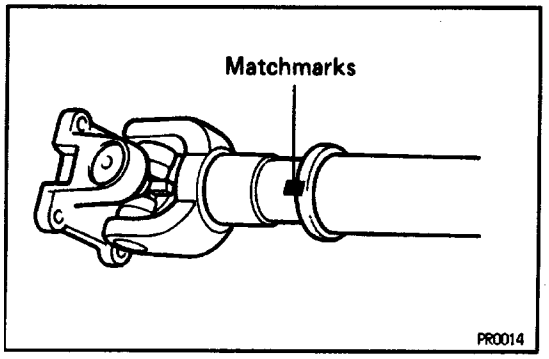

2. 4WD:

INSERT SLEEVE YOKE INTO PROPELLER SHAFT

(a) Apply MP grease to the propeller shaft spline and sleeve yoke sliding surface.
(b) Align the matchmarks on the sleeve yoke and propeller shaft.
(c) Insert the sleeve yoke into the propeller shaft.

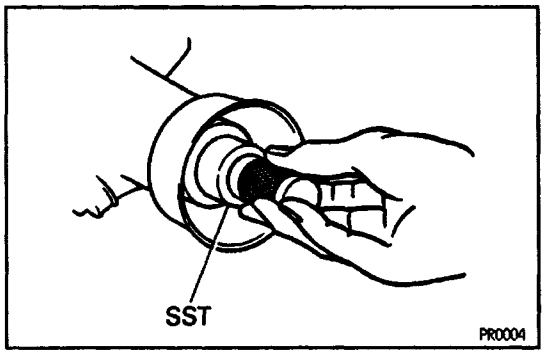

2WD:
PROPELLER SHAFT INSTALLATION

1. INSERT YOKE IN TRANSMISSION

(a) Remove SST.

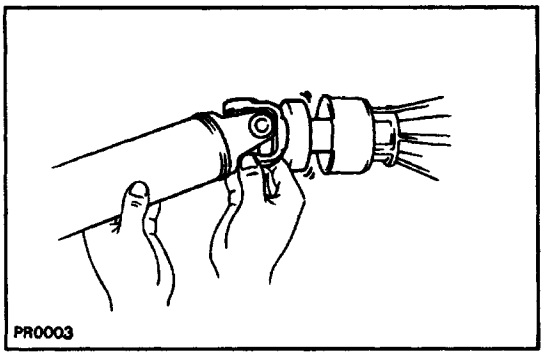

(b) Push the yoke into the transmission.

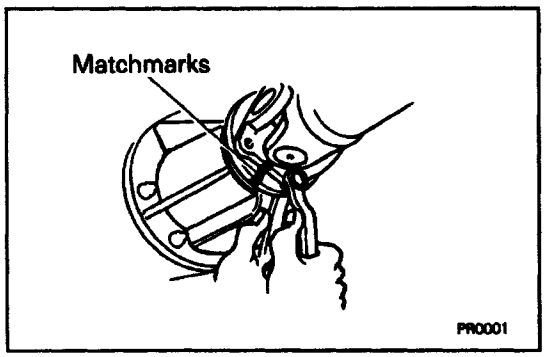

2. CONNECT PROPELLER SHAFT FLANGE TO COMPANION FLANGE ON DIFFERENTIAL

(a) Align the matchmarks on the flanges and connect the flanges with 4 bolts and nuts.

(b) Torque the 4 bolts and nuts.

Torque: 74 N–m (750 kgf–cm. 54 ft–lbf)

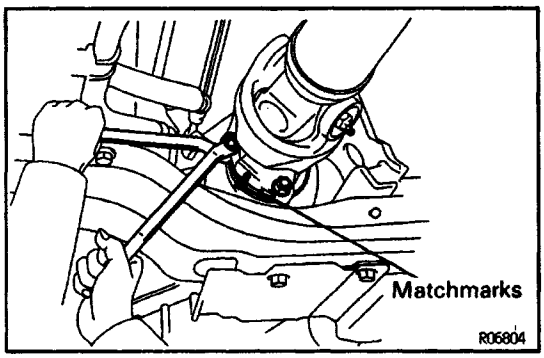

4WD:
PROPELLER SHAFT INSTALLATION

1. CONNECT FRONT PROPELLER SHAFT FLANGE TO COMPANION FLANGE ON TRANSFER

(a) Align the matchmarks on the flanges and connect the flanges with 4 bolts and nuts.

(b) Torque the 4 bolts and nuts.

Torque: 74 N–m (750 kgf–cm, 54 ft–lbf)

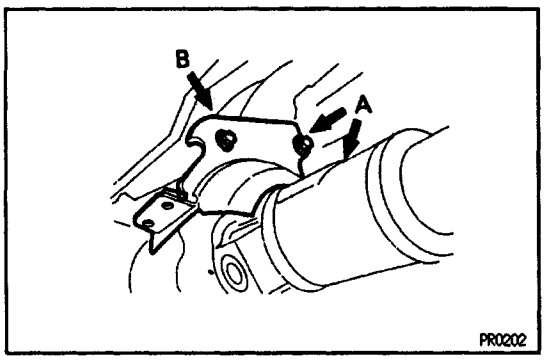

2. 3VZ–E and 22R–E w/ A.D.D.:

INSTALL FRONT PROPELLER SHAFT DUST COVER SUBASSEMBLY

(a) Install the cover.

(b) Install and torque the 3 bolts.

Torque:

A bolts (14 mm): 36 N–m (370 kgf–cm, 27 ft–lbf)

B bolts (12 mm): 23 N–m (230 kgf–cm, 17 ft–lbf)

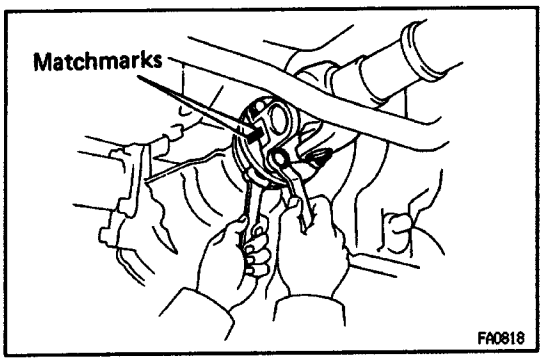

3. CONNECT PROPELLER SHAFT FLANGE TO COM–PANION FLANGE ON FRONT DIFFERENTIAL

(a) Align the matchmarks on the flanges and connect the flanges with 4 bolts and nuts.

(b) Torque the 4 bolts and nuts.

Torque: 74 N–m (750 kgf–cm, 54 ft–lbf)

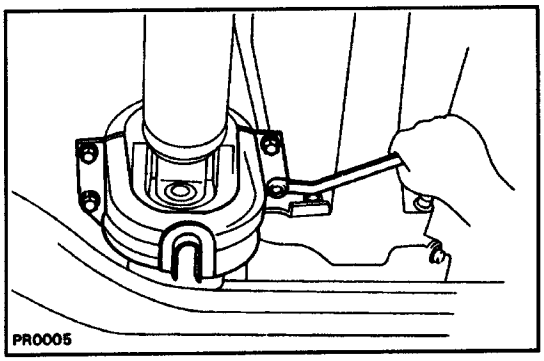

4. INSTALL FRONT PROPELLER SHAFT NO.2 DUST COVER

(a) Install the cover.

(b) Install and torque the 4 bolts and nuts.

Torque:

Bolts: 17 N–m (175 kgf–cm, 13 ft–lbf)

Nuts: 13 N–m (135 kgf–cm, 10 ft–lbf)

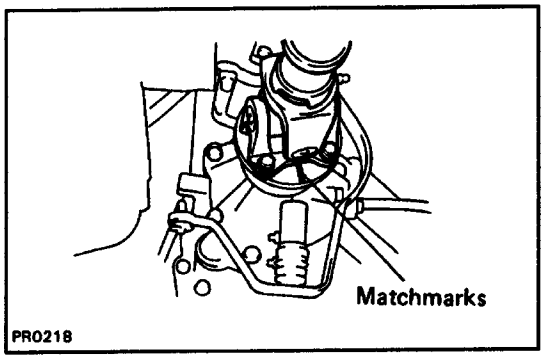

6. CONNECT REAR PROPELLER SHAFT FLANGE TO COMPANION FLANGE ON TRANSFER

(a) Align the matchmarks on the flanges and connect the flanges with 4 bolts and nuts.

(b) Torque the 4 bolts and nuts.

Torque: 74 N–m (750 kgf–cm, 54 ft–lbf)

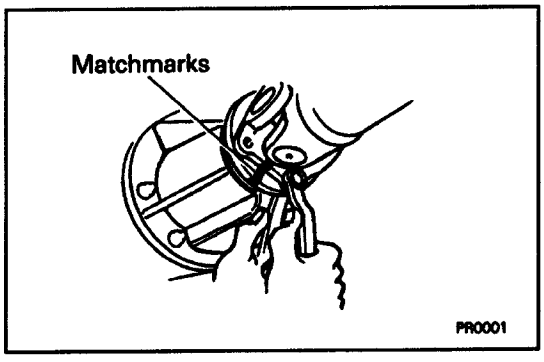

6. CONNECT PROPELLER SHAFT FLANGE TO COM–PANION FLANGE ON REAR DIFFERENTIAL

(a) Align the matchmarks on the flanges and connect the flanges with 4 bolts and nuts.

(b) Torque the 4 bolts and nuts.

Torque: 74 N–m (750 kgf–cm, 54 ft–lbf)

SERVICE SPECIFICATIONS

SERVICE DATA

Propeller shaft runout		Maximum	0.8 mm (0.031 in.)
Spider axial play		Maximum	0.05 mm (0.0020 in.)
Snap ring thickness	mark	color	
	1	–	2.100 – 2.150 mm (0.0827 – 0.0846 in.)
	2	–	2.150 – 2.200 mm (0.0846 – 0.0866 in.)
	3	–	2.200 – 2.250 mm (0.0866 – 0.0886 in.)
	–	Brown	2.250 – 2.300 mm (0.0886 – 0.0906 in.)
	–	Blue	2.300 – 2.350 mm (0.0906 – 0.0925 in.)
	6	–	2.350 – 2.400 mm (0.0925 – 0.0945 in.)
	7	–	2.400 – 2.450 mm (0.0945 – 0.0965 in.)
	8	–	2.450 – 2.500 mm (0.0965 – 0.0984 in.)

TORQUE SPECIFICATIONS

Part tightened	N·m	kgf·cm	ft·lbf
2WD:			
Propeller shaft x Differential	74	750	54
4WD:			
Front differential x Front propeller shaft	74	750	54
Front propeller shaft x Transfer	74	750	54
Rear differential x Rear propeller shaft	74	750	54
Rear propeller shaft x Transfer	74	750	54
Front propeller shaft No.2 dust cover set bolts	17	175	13
Front propeller shaft No.2 dust cover set nuts	13	135	10
w/ A.D.D. and 3VZ–E:			
Front propeller shaft dust cover subassembly x Bracket (B bolt)	23	230	17
Front propeller shaft dust over subassembly x Transfer (A bolt)	36	370	27

PRECAUTION

Be careful not to grip the propeller shaft tube too tightly in the vise as this will cause deformation.

TROUBLESHOOTING

Use the table below to help you find the cause of the problem. The numbers indicate the priority of the likely cause of the problem. Check each part in order. If necessary, replace these parts.

See Page / Parts Name / Trouble	Sleeve yoke spline worn	Propeller shaft runout	Propeller shaft imbalance	Sleeve yoke spline stuck	Spider bearing worn or stuck	Transmission extension housing rear bushing worn
See Page	PR–8,10	PR–9,10	–	PR–8,10	PR–9	–
Noise	1				2	
Vibration		3	4	2		1

FRONT AXLE

DESCRIPTION

Tapered roller bearings are used for the front wheel bearings.

The preload of the bearing can be determined only by tightening the axle hub nut to a specified torque.

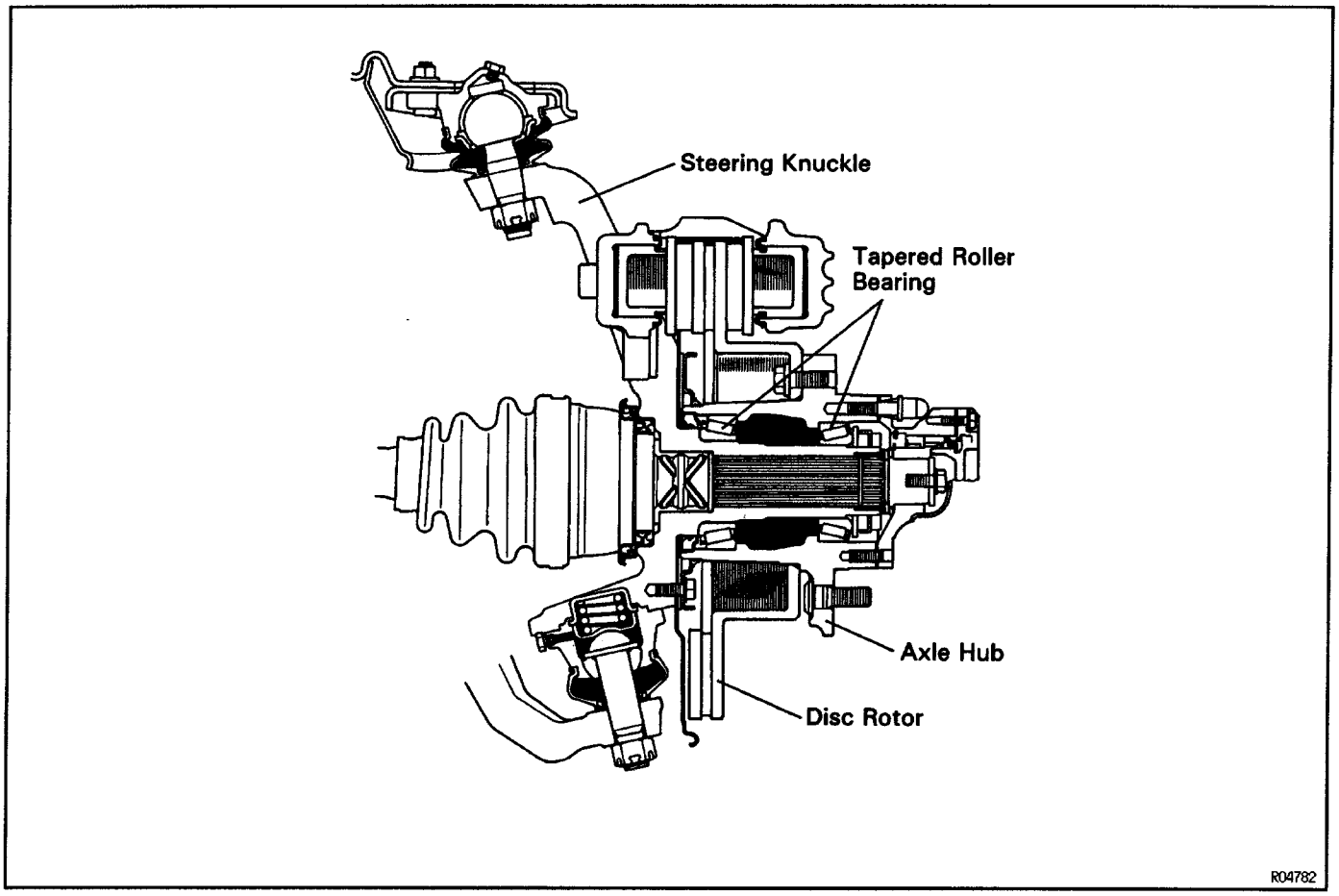

FREE WHEELING HUB

COMPONENTS

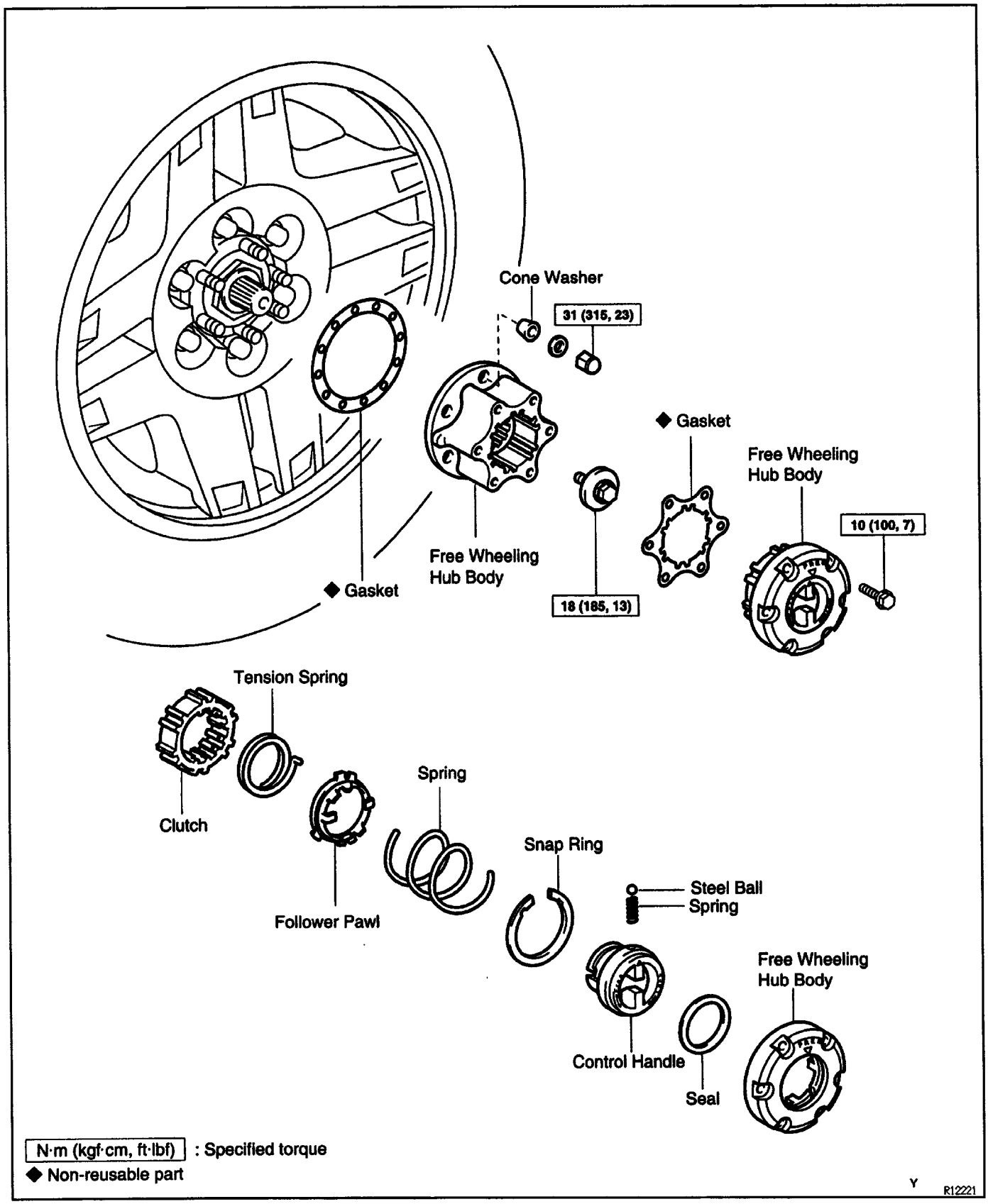

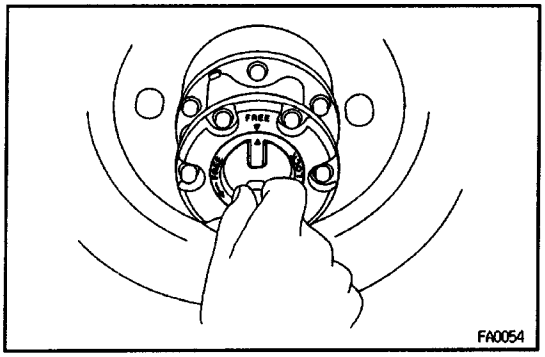

FREE WHEELING HUB REMOVAL

1. REMOVE FREE WHEELING HUB COVER

(a) Set the control handle to FREE.

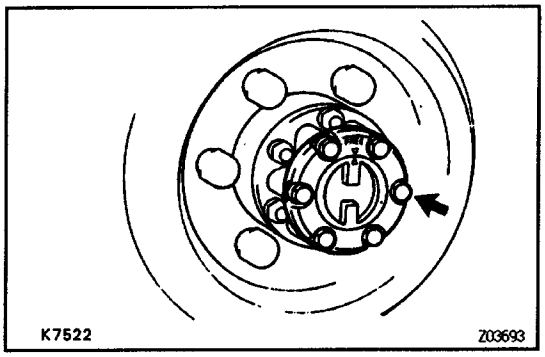

(b) Remove the cover mounting bolts and pull off the cover.
(c) Remove the gasket.

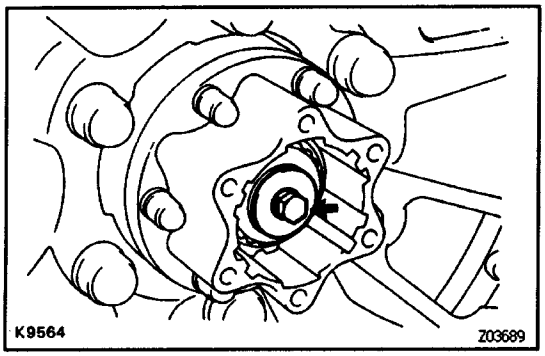

2. REMOVE BOLT WITH WASHER

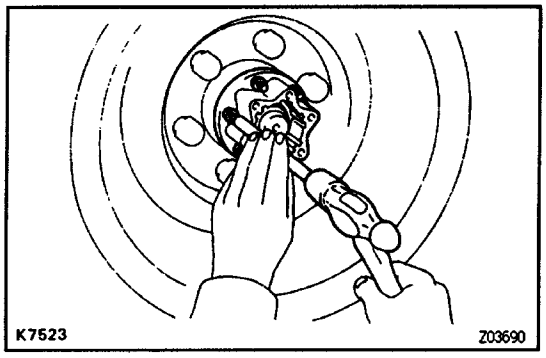

3. REMOVE FREE WHEELING HUB BODY

(a) Remove the mounting nuts and washers.
(b) Using a brass bar and hammer, tap on the bolts head and remove the cone washers.
(c) Pull off the free wheeling hub body.
(d) Remove the gasket.

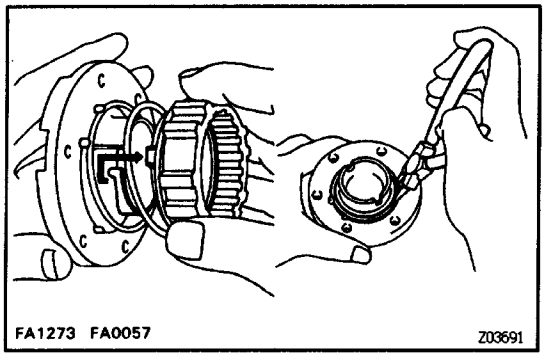

FREE WHEELING HUB DISASSEMBLY

REMOVE CONTROL HANDLE FROM FREE WHEELING HUB COVER

(a) Compressing the spring, remove the pawl tab from the handle cam, and remove the clutch.
(b) Using snap ring pliers, remove the snap ring.
(c) Remove the control handle.

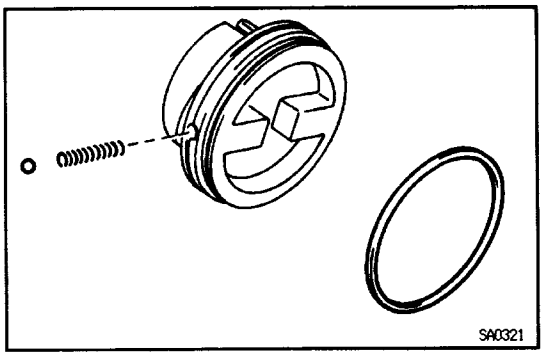

(d) Remove the steel ball, spring and seal from the control handle.

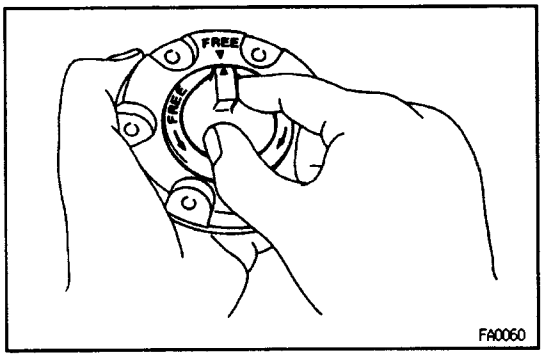

FREE WHEELING HUB INSPECTION

INSPECT COVER, HANDLE AND SEAL

Temporarily install the handle in the cover and check that the handle moves smoothly and freely.

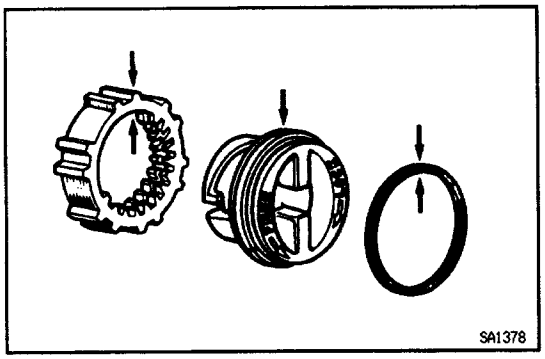

FREE WHEELING HUB ASSEMBLY

1. APPLY MP GREASE TO SLIDING SURFACE OF PARTS

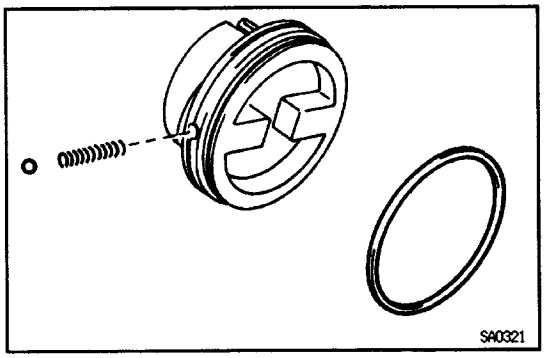

2. INSTALL CONTROL HANDLE TO COVER

(a) Install the seal, spring and steel ball to the handle.

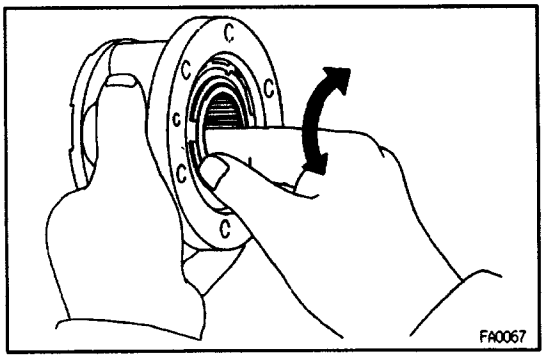

(b) Install the handle in the cover and install the snap ring with snap ring pliers.

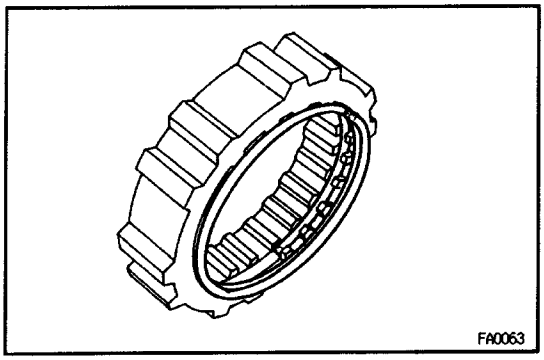

3. INSTALL TENSION SPRING IN CLUTCH

Install the tension spring in the clutch with the spring end aligned with the initial groove.

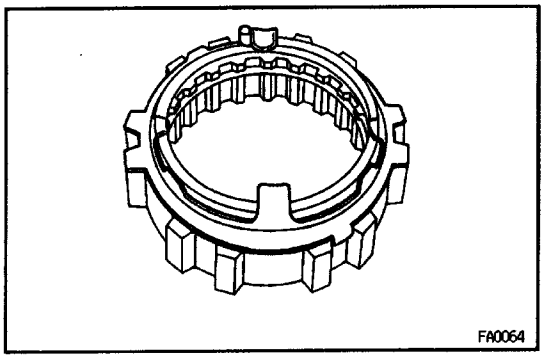

4. INSTALL FOLLOWER PAWL TO CLUTCH

(a) Place the follower pawl on the tension spring with one of the large tabs against the bent spring end.

(b) Place the top ring of the spring on the small tabs.

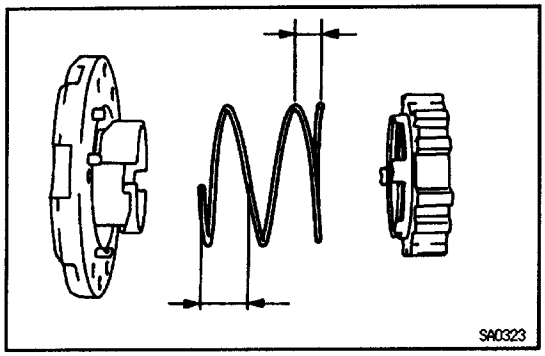

5. INSTALL CLUTCH AND SPRING INTO COVER

(a) Place the spring between the cover and clutch with the large spring end toward the cover.

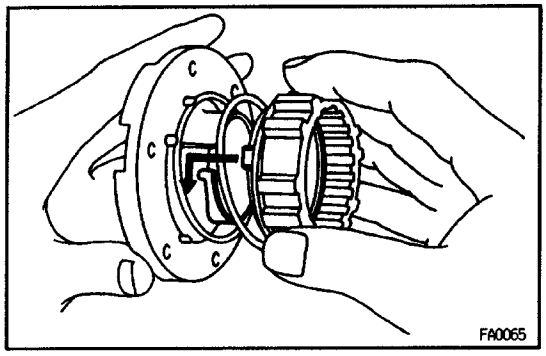

(b) Compress the spring and install the clutch with the pawl tab fit to the handle cam.

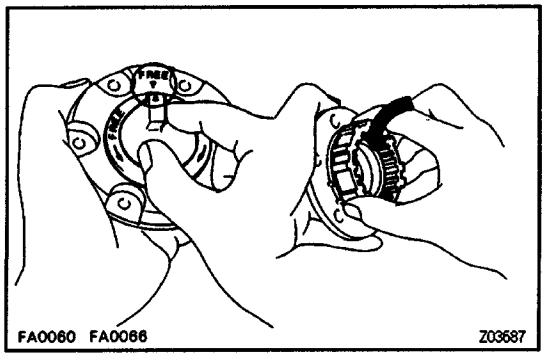

6. TEMPORARILY INSTALL COVER TO BODY AND CHECK FREE WHEELING HUB

(a) Set the control handle and clutch to the FREE position.

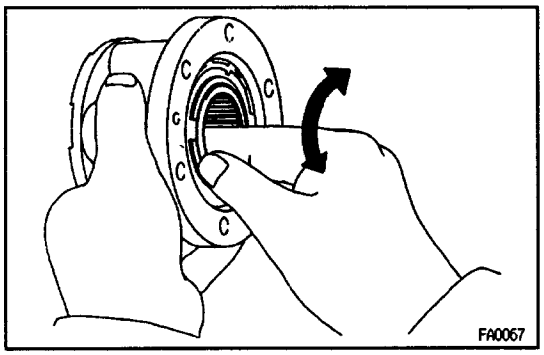

(b) Insert the cover in the body and verify that the inner hub turns smoothly.
(c) Remove the cover from the body.

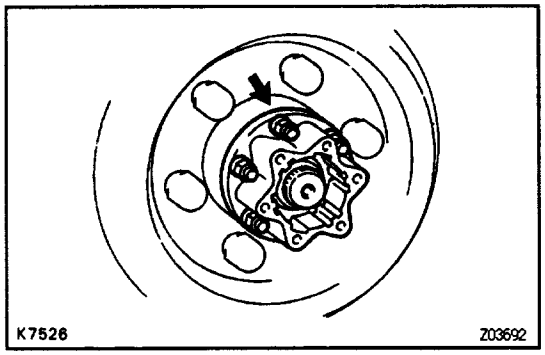

FREE WHEELING HUB INSTALLATION

1. INSTALL FREE WHEELING HUB BODY

(a) Place a new gasket in position on the front axle hub.
(b) Install the free wheeling hub body with 6 cone washers and nuts. Tighten the nuts.

Torque: 31 N–m (315 kgf–cm, 23 ft–lbf)

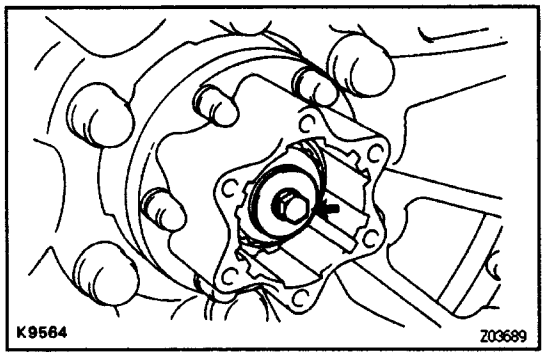

2. INSTALL BOLT WITH WASHER

Torque: 18 N–m (185 kgf–cm, 13 ft–lbf)

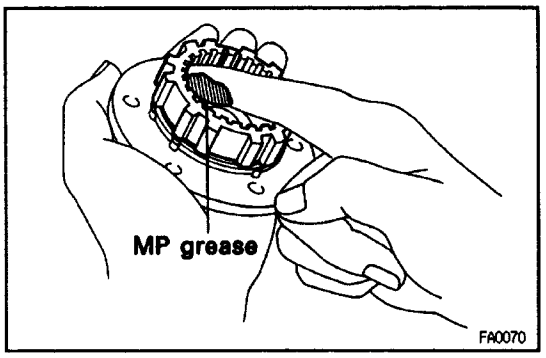

3. APPLY MP GREASE TO INNER HUB SPLINES

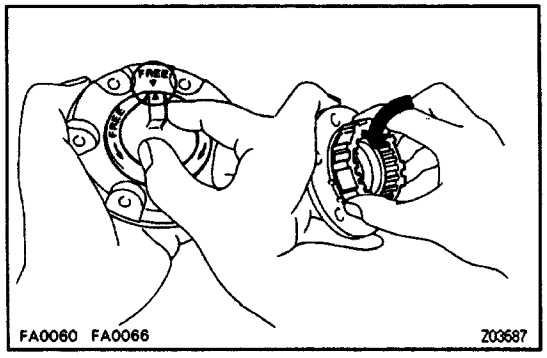

4. INSTALL FREE WHEELING HUB COVER WITH NEW GASKET

(a) Set the control handle and clutch to the FREE position.
(b) Place a new gasket in position on the cover.

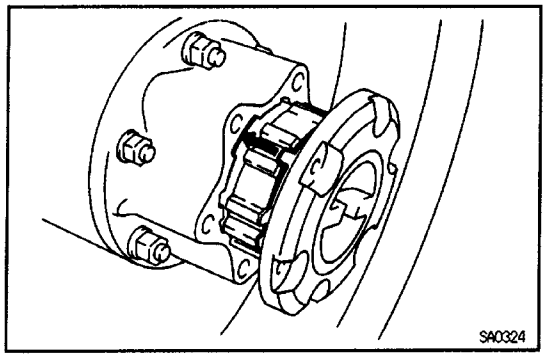

(c) Install the cover to the body with the follower pawl tabs aligned with the non–toothed portions of the body.

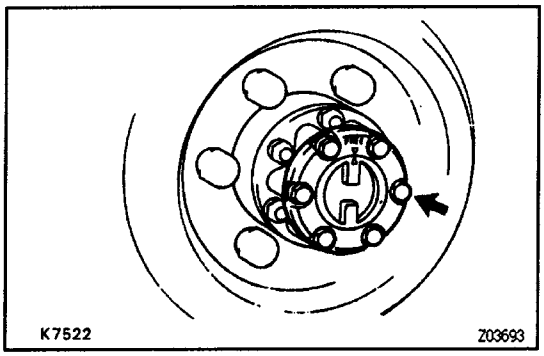

(d) Tighten the cover mounting bolts.

Torque: 10 N–m (100 kgf–cm, 7 ft–lbf)

FRONT AXLE HUB AND STEERING KNUCKLE

COMPONENTS

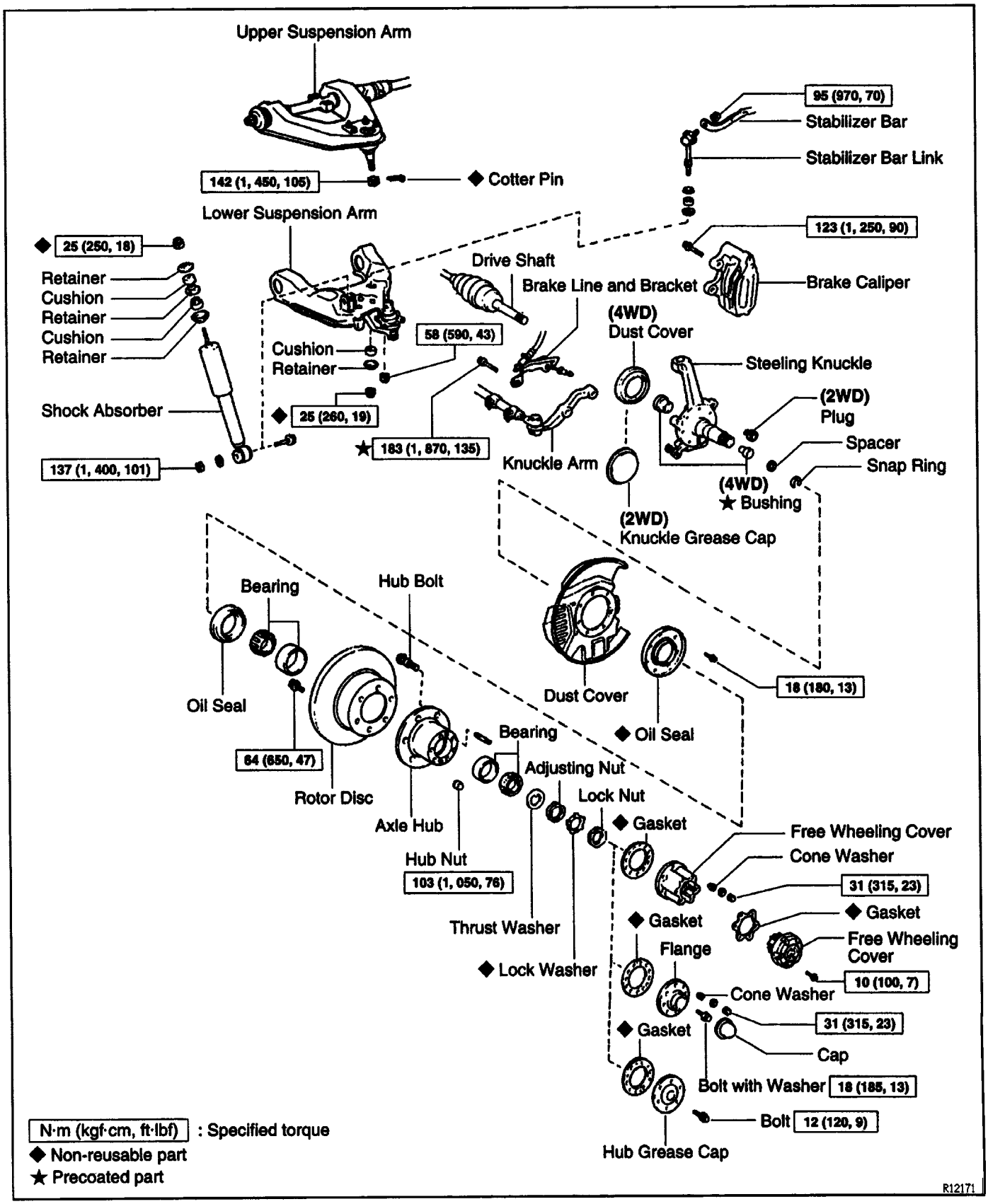

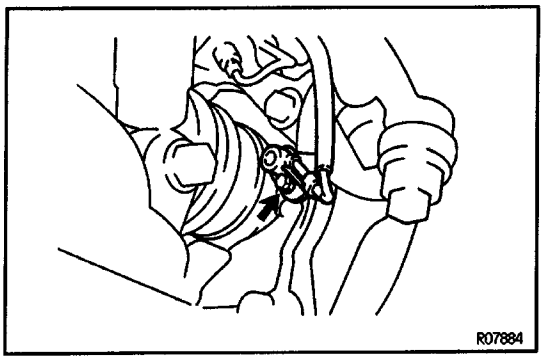

FRONT AXLE HUB REMOVAL

1. JACK UP VEHICLE AND REMOVE FRONT WHEEL

2. w/ 4 WHEEL ABS:

DISCONNECT ABS SPEED SENSOR FROM STEERING KNUCKLE

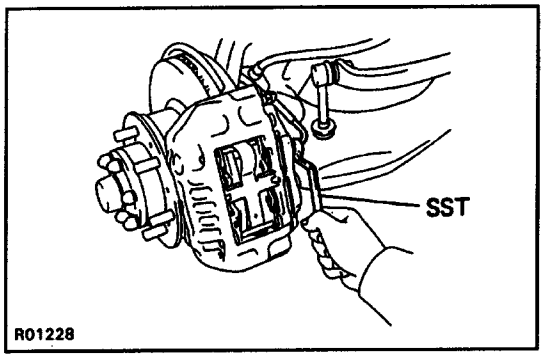

3. REMOVE BRAKE CALIPER

(a) Using SST, disconnect the brake line from the brake caliper.

SST 09751–36011

(b) Drain the brake fluid to a container.

(c) Remove the brake caliper from the steering knuckle.

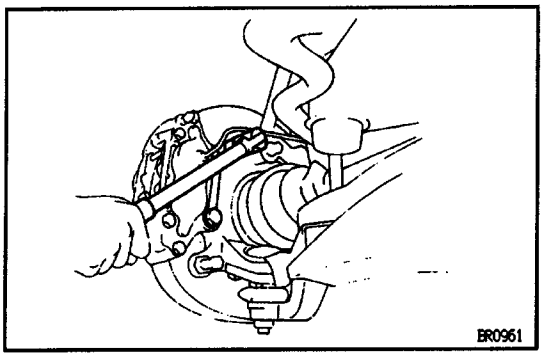

4. 4WD, w/ FREE WHEELING HUB:

REMOVE FREE WHEELING HUB

(See page SA–26**)**

5. 4WD, w/o FREE WHEELING HUB:

REMOVE FLANGE

(a) Remove the cap from the flange.

(b) Remove the bolt.

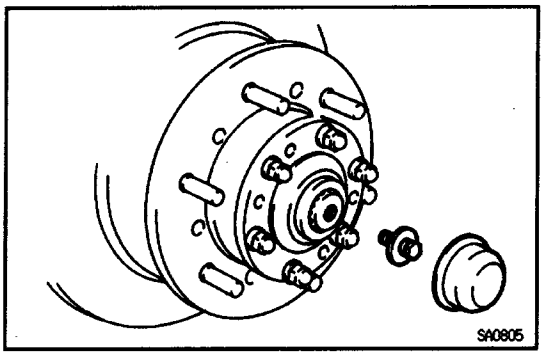

(c) Remove the 6 nuts and washers.

(d) Using a brass bar and hammer, tap on the bolts head and remove the 6 cone washers.

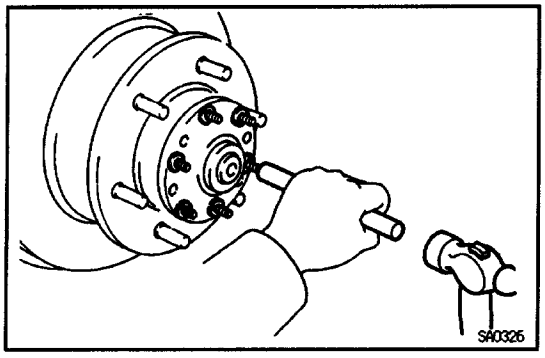

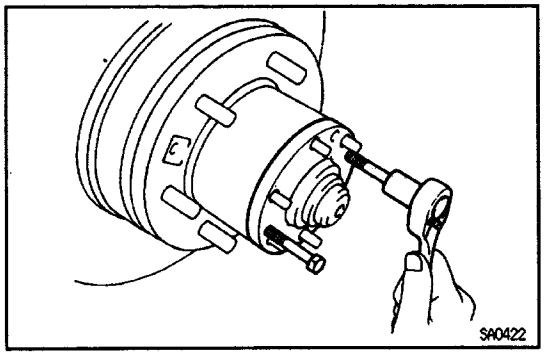

(e) Install and tighten 2 bolts and remove the flange.
(f) Remove the gasket.

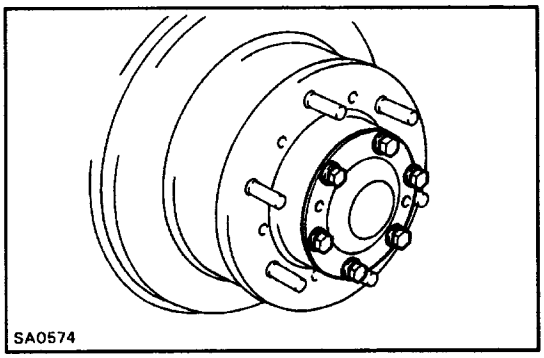

6. 2WD:

REMOVE HUB GREASE CAP

Remove the 6 bolts and hub grease cap from the axle hub.

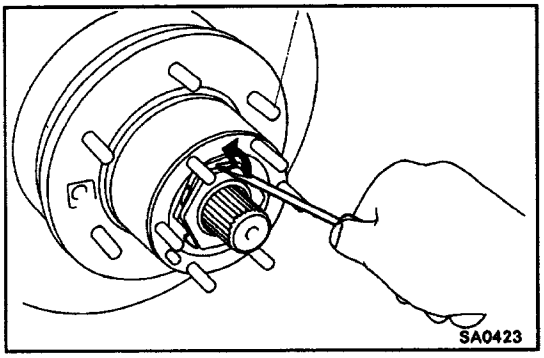

7. REMOVE AXLE HUB WITH DISC

(a) Using a screwdriver, release the lock washer.

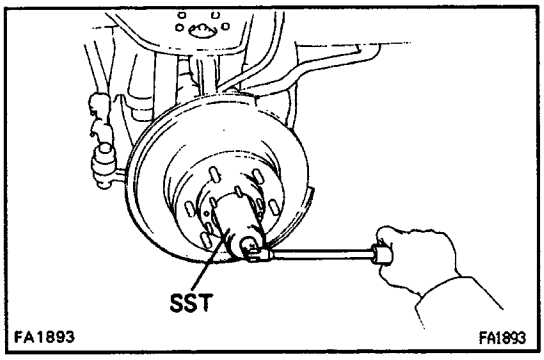

(b) Using SST, remove the lock nut and lock washer.
SST 09607–60020
(c) Using SST, remove the adjusting nut.
SST 09607–60020

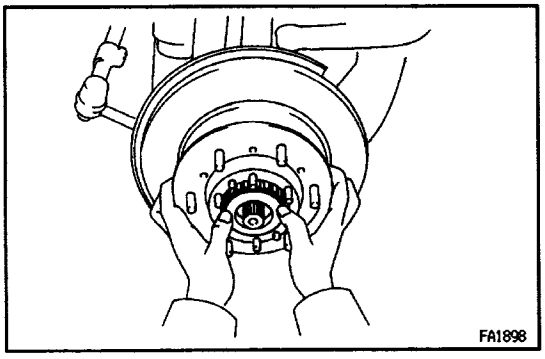

(d) Remove the hub and disc together with the outer bearing and thrust washer.

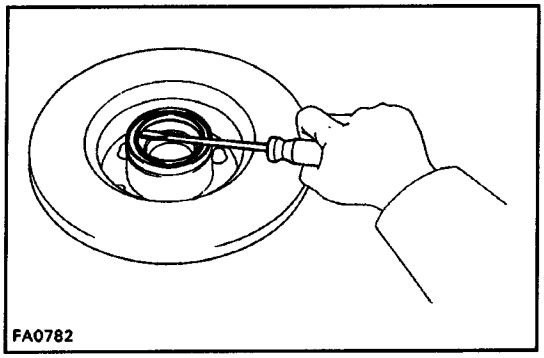

8. REMOVE OIL SEAL AND INNER BEARING

(a) Using a screwdriver, pry out the oil seal.

NOTICE: Be careful not to damage the ABS speed sensor rotor.

(b) Remove the inner bearing from the hub.

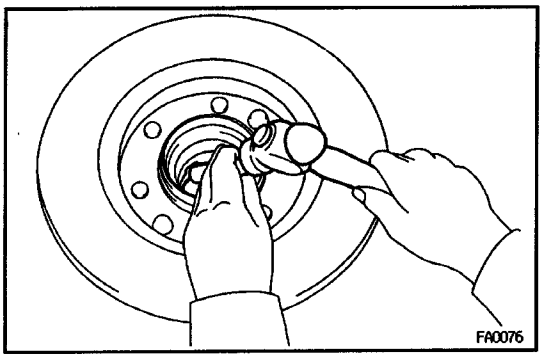

FRONT AXLE HUB BEARING INSPECTION AND REPAIR

1. INSPECT BEARINGS

Clean the bearings and outer races and inspect them for wear or damage.

2. REPLACE BEARING OUTER RACES

(a) Using a brass bar and hammer, drive out the bearing outer races.

NOTICE: Be careful not to damage the ABS speed sensor rotor.

(b) Using SST, carefully drive in new bearing outer races.

SST 09608–35014,
Outside race (09608–06020, 09608–06200)
Inside race (09608–06020,09608–06210)

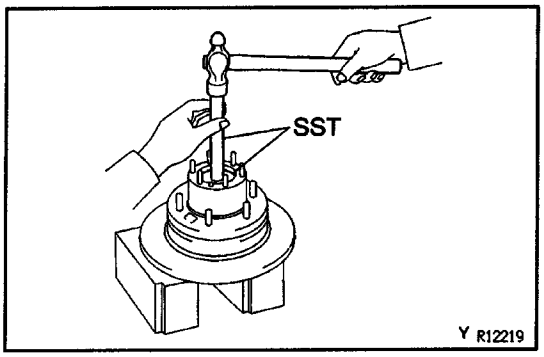

HUB BOLT REPLACEMENT

1. REMOVE HUB BOLT

(a) Place matchmarks on the disc and axle hub.

(b) Remove the 6 bolts, disc and axle hub.

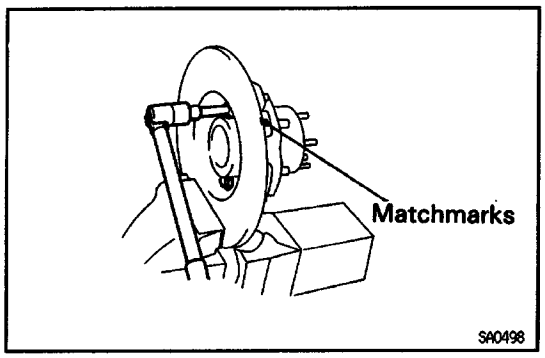

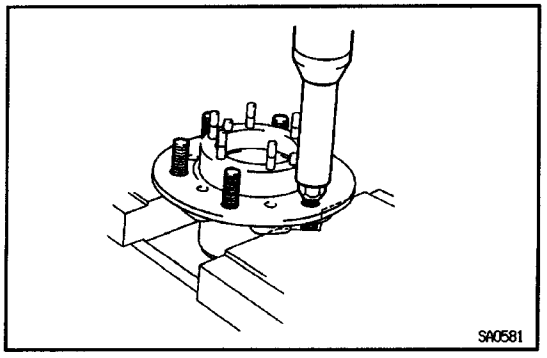

(c) install the nut to the hub bolt.

(d) Using an extension bar and press, press out the hub bolt.

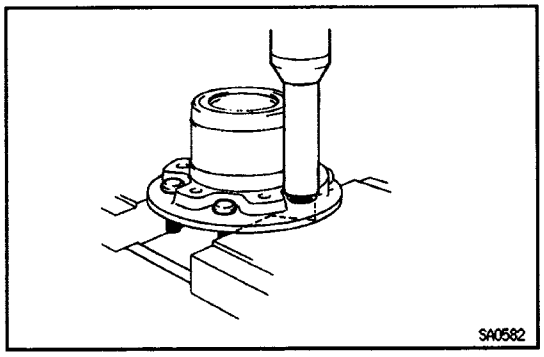

2. INSTALL HUB BOLT

(a) Using an extension bar and press, press in the hub bolt.

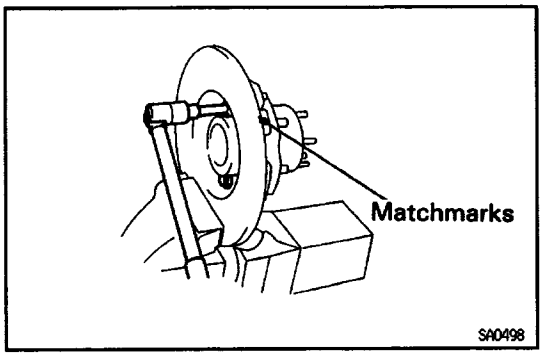

(b) Align the matchmarks and install the axle hub to the disc with the 6 bolts.

Torque: 64 N–m (650 kgf–cm, 47 ft–lbf)

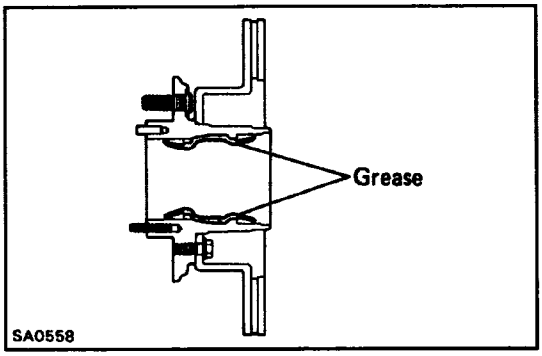

FRONT AXLE HUB INSTALLATION

1. PACK BEARING WITH MP GREASE

(a) Place MP grease in the palm of your hand.

(b) Pack grease into the bearing, continuing until the grease oozes out from the other side.

(c) Do the same around the bearing circumference.

2. COAT INSIDE OF HUB WITH MP GREASE

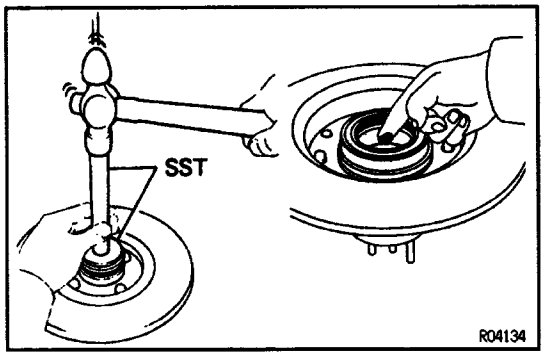

3. INSTALL INNER BEARING AND OIL SEAL

(a) Place the inner bearing into the hub.

(b) Using SST and a hammer, drive in a new oil seal into the hub.

SST 09608–35014 (09608–06020, 09608–06150)

NOTICE: Be careful not to damage the ABS speed sensor rotor.

(c) Coat the oil seal lip with MP grease.

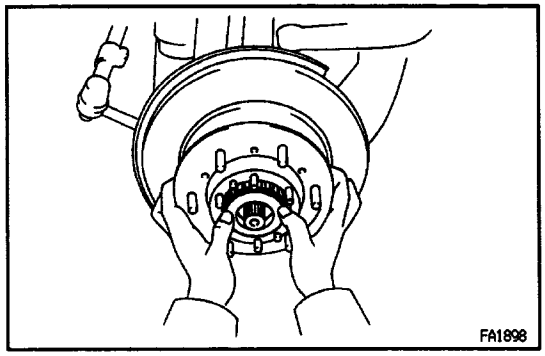

4. INSTALL AXLE HUB TO STEERING KNUCKLE

(a) Place the axle hub to the steering knuckle.

(b) Install the outer bearing.

(c) Install the thrust washer.

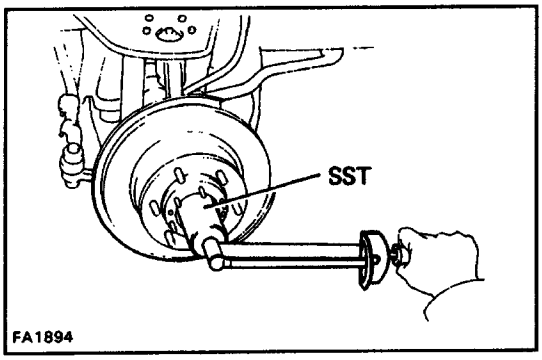

5. ADJUST PRELOAD

(a) Using SST, torque the adjusting nut.
SST 09607–60020
Torque: 59 N–m (600 kgf–cm, 43 ft–lbf)
(b) Turn the hub right and left 2 or 3 times.
(c) Loosen the nut until it can be turned by hand.
(d) Using SST, retighten the adjusting nut.
SST 09607–60020
Torque: 25 N–m (250 kgf–cm, 18 ft–lbf)

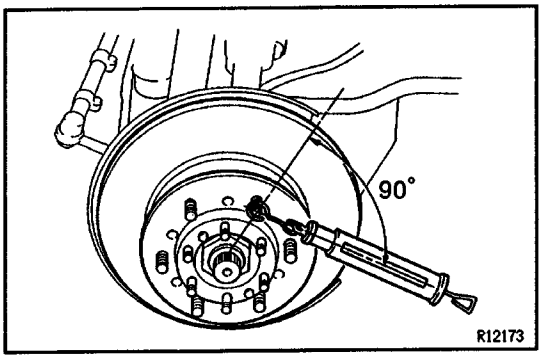

(e) Using a spring tension gauge, check the preload.
Preload (starting):
28 – 56 N (2.9 – 5.7 kgf, 6.4 – 12.6 lbf)
HINT: Make sure to check preload in the direction.

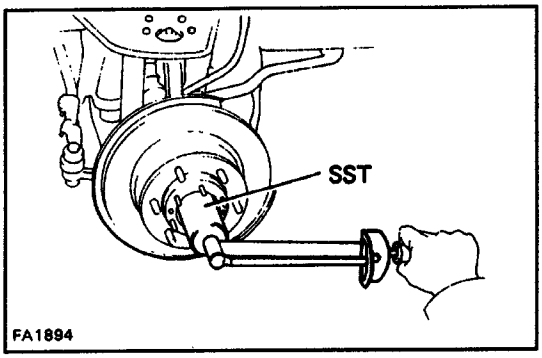

6. INSTALL LOCK WASHER AND LOCK NUT

(a) Install a new lock washer and lock nut.
(b) Using SST, torque the lock nut.
SST 09607–60020
Torque: 47 N–m (480 kgf–cm, 35 ft–lbf)
(c) Check that the bearing has no play.

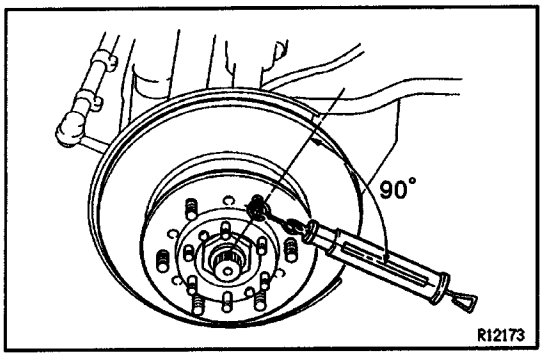

(d) Using a spring tension gauge, check the preload.
Preload (starting) :
28 – 56N(2.9 – 5.7kgf,6.4 – 12.6 lbf)
HINT: Make sure to check preload in the direction.
If the preload not within specification, adjust it again with the adjusting nut.

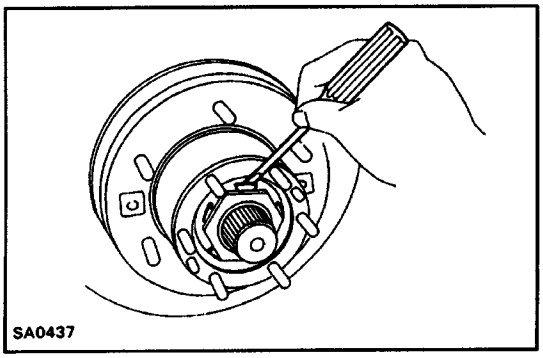

(e) Secure the lock nut by bending one of the lock washer teeth inward and the other lock washer teeth outward.

7. 4WD, w/ FREE WHEELING HUB:
INSTALL FREE WHEELING HUB
(See page SA–30)

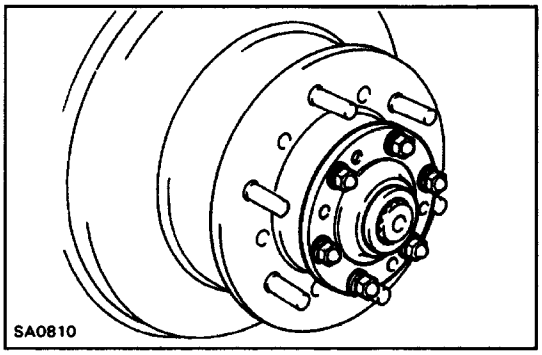

8. 4WD, w/o FREE WHEELING HUB:

INSTALL FLANGE

(a) Place a new gasket in position on the axle hub.
(b) Install the flange to the axle hub.
(c) Install the 6 cone washers, plate washers and nuts.
(d) Torque the 6 nuts.
Torque: 31 N–m (315 kgf–cm. 23 ft–lbf)
(e) Coat inside of the cap with MP grease.
(f) Install the bolt and cap.
Torque: 18 N–m (185 kgf–cm, 13 ft–lbf)

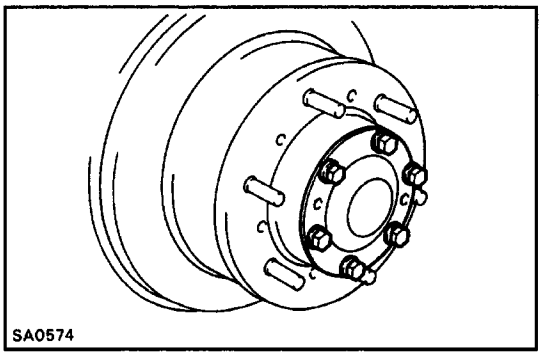

9. 2WD:

INSTALL HUB GREASE CAP

(a) Place a new gasket in position on the axle hub.
(b) Install the hub grease cap to axle hub with the 6 bolts.
Torque: 12 N–m (120 kgf–cm, 9 ft–lbf)

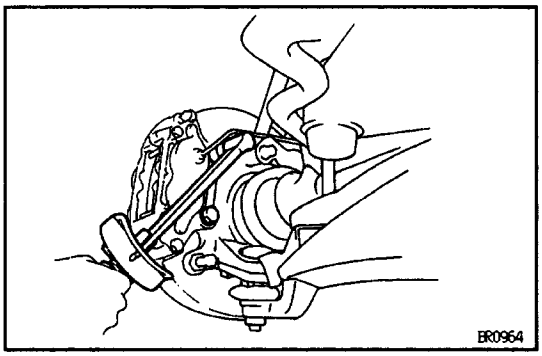

10. INSTALL BRAKE CALIPER

(a) Install the brake caliper to the steering knuckle.
(b) Torque the 2 bolts.
Torque: 123 N–m (1,250 kgf–cm, 90 ft–lbf)

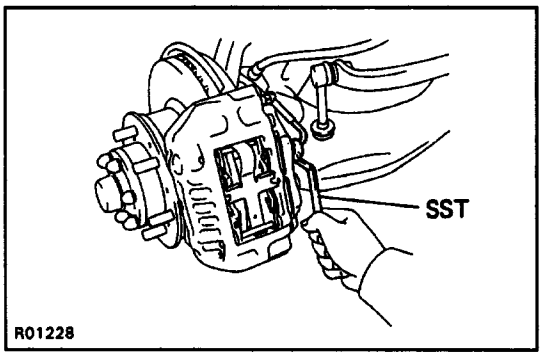

(c) Using SST, connect the brake line.
SST 09751– 36011
Torque: 15 N–m (155 kgf –cm, 11 ft–lbf)

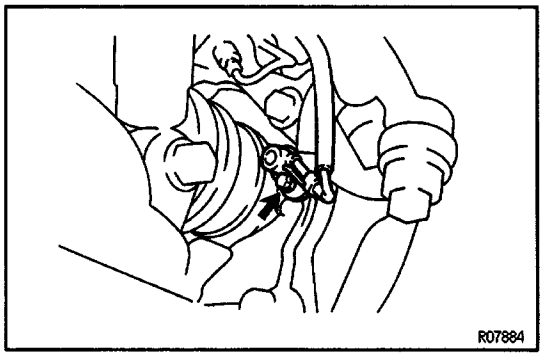

11. w/ 4 WHEEL ABS:

CONNECT ABS SPEED SENSOR TO STEERING KNUCKLE
Torque: 7.8 N–m (80kgf–cm, 69 in.–lbf)

12. INSTALL FRONT WHEEL AND LOWER VEHICLE
Torque: 103 N–m (1,050 kgf–cm. 76 ft–lbf)

13. BLEED BRAKE SYSTEM
(See page BR–8**)**

14. w/ 4 WHEEL ABS:

CHECK ABS SPEED SENSOR SIGNAL
(See page BR–86**)**

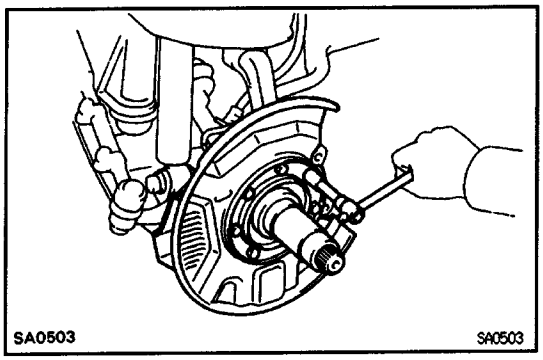

STEERING KNUCKLE REMOVAL

1. REMOVE BRAKE CALIPER AND FRONT AXLE HUB
(See page SA–13)

2. REMOVE DUST COVER AND OIL SEAL

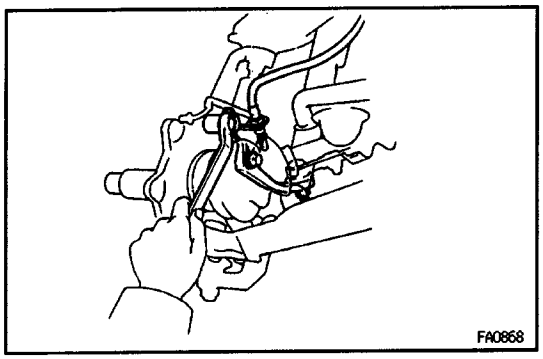

3. DISCONNECT KNUCKLE ARM FROM STEERING KNUCKLE

Remove the 2 bolts and disconnect the brake line bracket and knuckle arm.

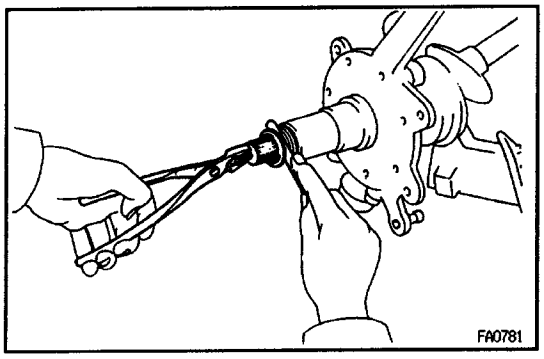

4. 4WD:

MEASURE STEERING KNUCKLE BUSHING THRUST CLEARANCE

(a) Install a bolt in the drive shaft.

(b) Using a thickness gauge, measure the front drive shaft thrust clearance between the steering knuckle outside bushing and spacer, by pulling the bolt and applying a load of 98 N (10 kgf, 22.0 lbf) of pressure.

Front drive shaft thrust clearance :

Standard 0.075 – 0.690 mm (0.0030 – 0.0272 in.)

Maximum 1.0 mm (0.039 in.)

If the measurement exceeds the maximum, replace the steering knuckle outside and inside bushings.

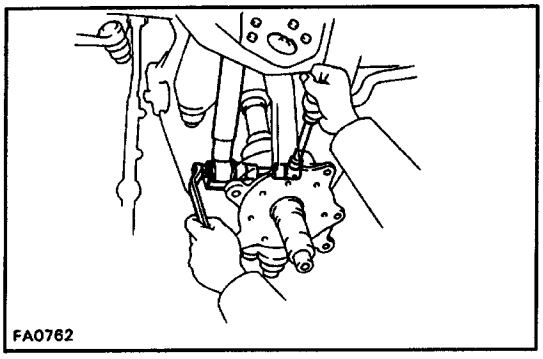

5. DISCONNECT FRONT SHOCK ABSORBER FROM LOWER SUSPENSION ARM

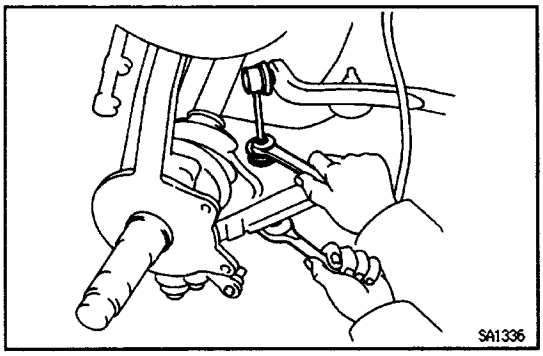

6. DISCONNECT STABILIZER BAR LINK FROM LOWER SUSPENSION ARM

(a) Remove the nut, retainer and cushion from the stabilizer bar link.

(b) Disconnect the stabilizer bar link from the lower suspension arm and remove the retainers and cushion.

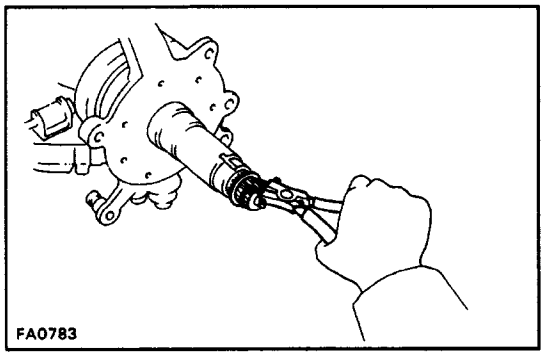

7. 4WD:

REMOVE SNAP RING AND SPACER

Using snap ring pliers, remove the snap ring and spacer.

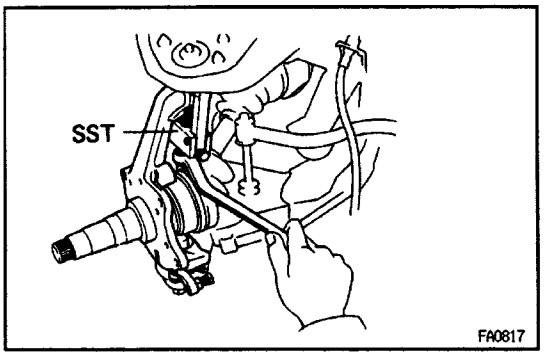

8. REMOVE STEERING KNUCKLE

(a) Remove the cotter pin and nut from the upper ball joint.

(b) Using SST, disconnect the steering knuckle from the upper ball joint.

SST 09628–62011

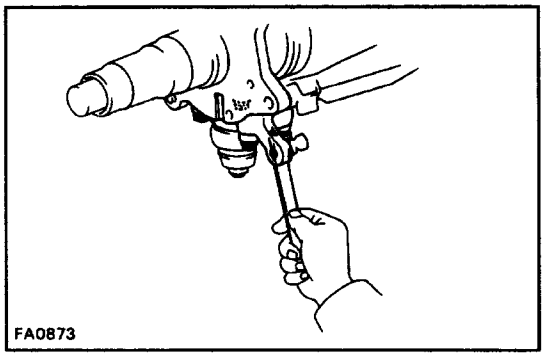

(c) Remove the 4 bolts from the lower ball joint and disconnect the steering knuckle from the lower ball joint.

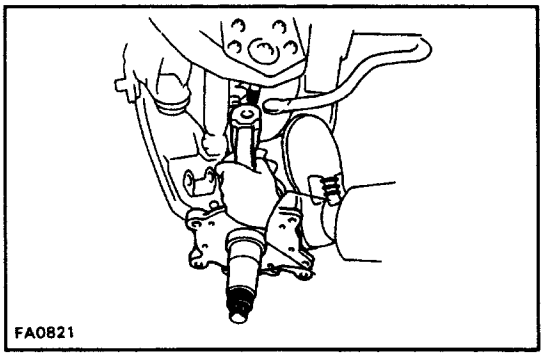

(d) Push down the lower suspension arm and remove the steering knuckle.

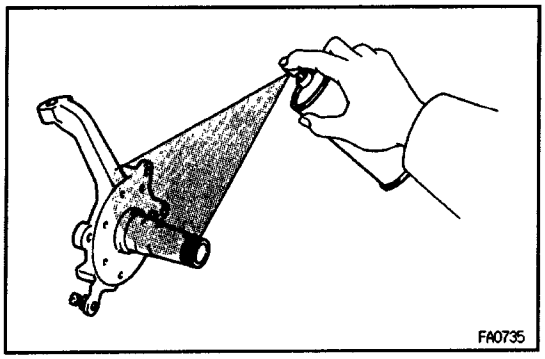

STEERING KNUCKLE INSPECTION

INSPECT STEERING KNUCKLE

Using a dye penetrant, check the steering knuckle for cracks.
If a crack is found, replace the steering knuckle.

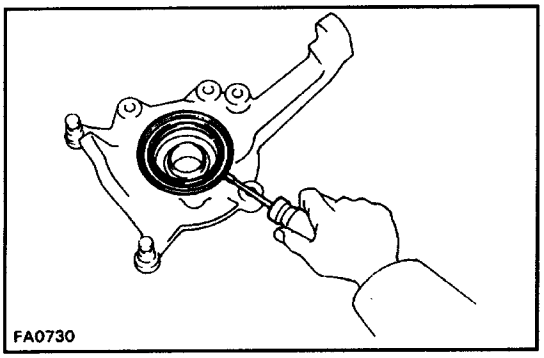

STEERING KNUCKLE REPLACE

1. 4WD:

REPLACE STEERING KNUCKLE BUSHINGS

Using a screwdriver, pry out the dust deflector from the steering knuckle.

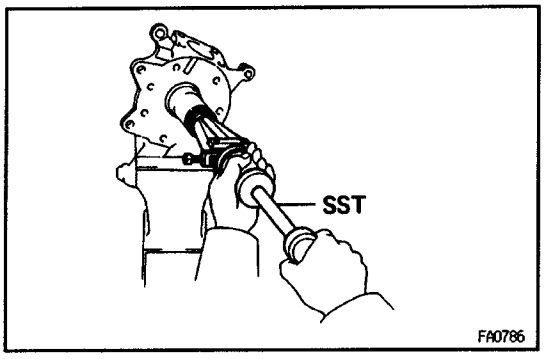

2. REMOVE STEERING KNUCKLE BUSHING

(a) Using SST, pull out the steering knuckle outside bushing.

SST 09308 – 00010

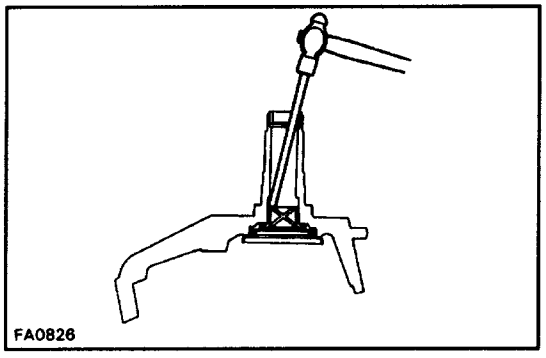

(b) Using a brass bar and hammer, drive out the steering knuckle inside bushing.

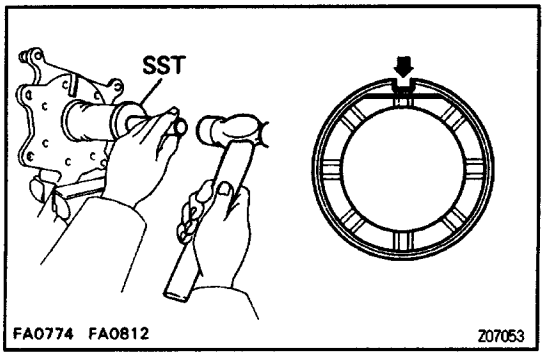

(c) Using SST and a hammer, tap in a new steering knuckle outside bushing.

SST 09550–10012 (09252–10010, 09555–10010)

HINT : When installing the bushing to the spindle, make sure the flat portion of the bushing is aligned with the spindle groove, as shown in the illustration.

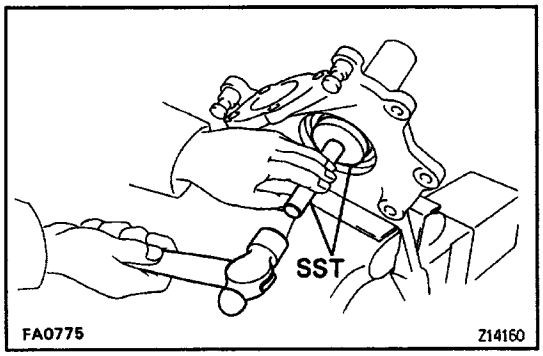

(d) Using SST and a hammer, tap in a new steering knuckle inside bushing.
SST 09550–10012 (09252–10010, 09555–10010)

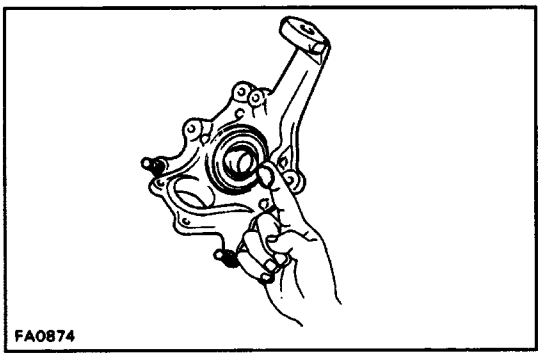

(e) Apply the following grease to the steering knuckle bushings.

Grease type:

Synthetic oil and lithium soap base chassis grease, NLGI No.1

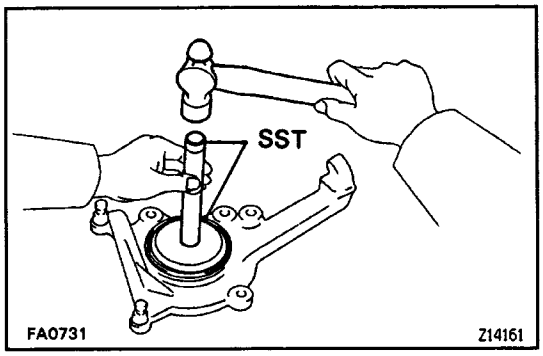

(f) Using SST and a hammer, tap in a new dust deflector.
SST 09608–35014 (09608–06020, 09608–06180)

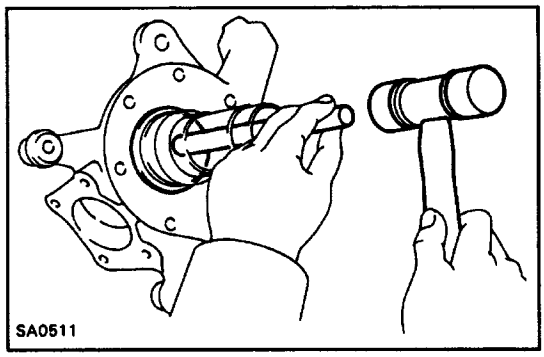

3. 2WD: REPLACE KNUCKLE GREASE CAP

(a) Using a brass bar and hammer, tap out the knuckle grease cap.

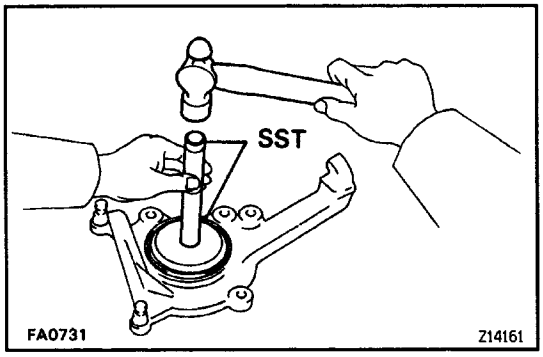

(b) Using SST and a hammer, tap in a new knuckle grease cap.
SST 09608 – 35014 (09608 – 06020, 09608 – 06180)

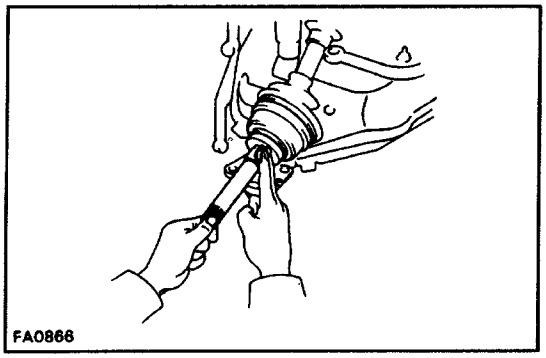

STEERING KNUCKLE INSTALLATION

1. INSTALL STEERING KNUCKLE

(a) 4WD:

Apply molybdenum disulphide lithium base grease to the drive shaft.

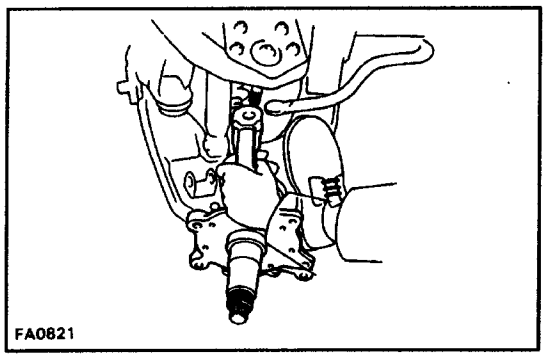

(b) Push down the lower suspension arm and install the steering knuckle.

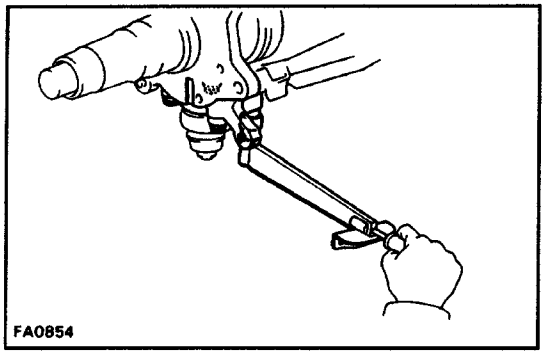

(c) Connect the lower ball joint to the steering knuckle and install and torque the 4 bolts.

Torque: 58 N–m (590 kgf–cm, 43 ft–lbf)

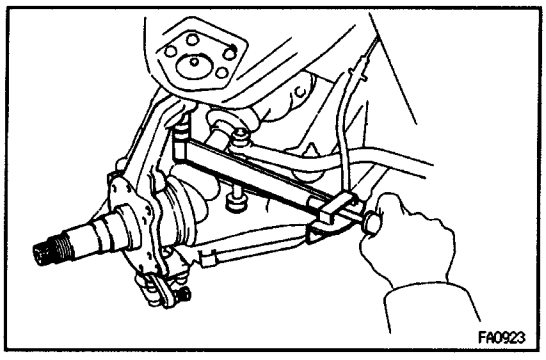

(d) Connect the upper ball joint to the steering knuckle and install and torque the 4 nuts.

Torque: 142 N–m (1,450 kgf–cm, 105 ft–lbf)

(e) Install a new cotter pin.

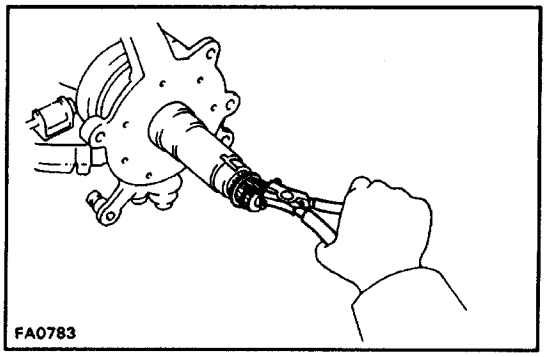

2. 4WD:

INSTALL SPACER AND SNAP RING

(a) Install the spacer to the front drive shaft.

(b) Using snap ring pliers, install the snap ring.

NOTICE: If you replace the steering knuckle bushing, recheck the front drive shaft thrust clearance.

(c) Install the bolt in the shaft.

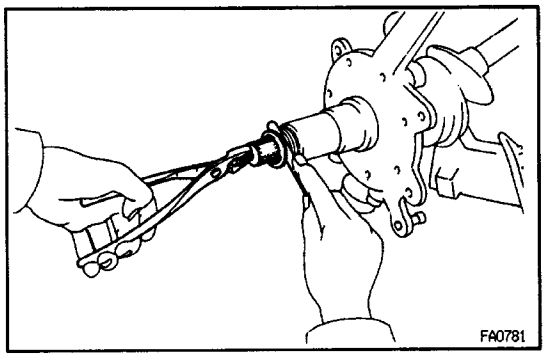

(d) Using a thickness gauge, measure the front drive shaft thrust clearance between the steering knuckle outside bushing and spacer, by pulling the bolt and applying a load of 98 N (10 kgf, 22.0 lbf**).**

Front drive shaft thrust clearance :

Standard clearance 0.075–0.690 mm (0.0030–0–0272 in.)

If the clearance is not within specification, replace the spacer.

Spacer thickness

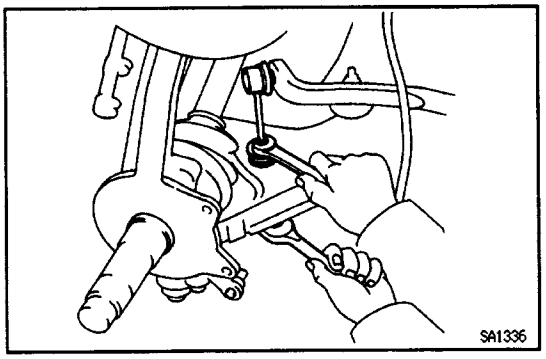

1.80 mm (0.0709 in.)	2.25 mm (0.0886 in.)

3. CONNECT STABILIZER BAR LINK TO LOWER SUSPENSION ARM

(a) Install the retainers and cushion to the stabilizer bar link.

(b) Connect the stabilizer bar link to the lower suspension arm with the cushion, retainer, new nut and torque the nut.

Torque: 25 N–m (260 kgf–cm, 19 ft–lbf)

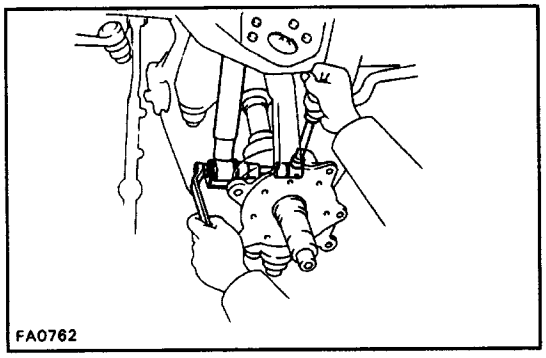

4. CONNECT FRONT SHOCK ABSORBER TO LOWER SUSPENSION ARM

Torque: 137 N–m (1,400 kgf–cm, 101 ft–lbf)

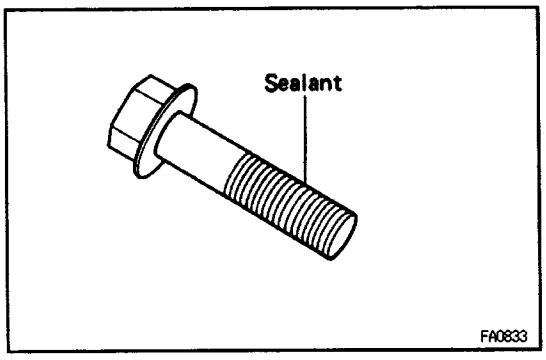

5. CONNECT KNUCKLE ARM TO STEERING KNUCKLE

(a) Clean the threads of the bolts and steering knuckle with toluene or trichloroethylene.

(b) Apply sealant to the bolt threads.

Sealant:

Pant No.08833–00070. THREE BOND 1324 or equivalent.

(c) Connect the knuckle arm and brake line bracket, install the 2 bolts.

(d) Torque the bolts.

Torque: 183 N–m (1,870 kgf–cm, 135 ft–lbf)

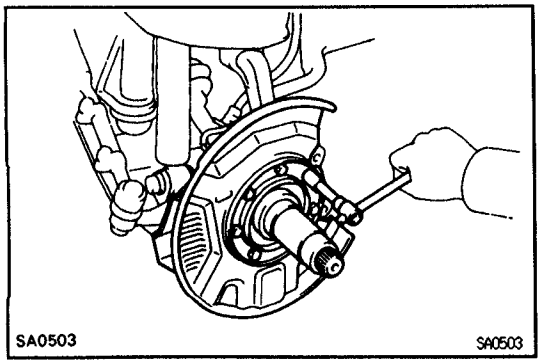

6. INSTALL DUST COVER AND NEW OIL SEAL

Torque: 18 N–m (185 kgf–cm, 13 ft–lbf)

7. INSTALL FRONT AXLE HUB AND BRAKE CALIPER

(See page SA–16)

8. BLEED BRAKE SYSTEM

(See page BR–8)

9. w/ 4 WHEEL ABS:

CHECK ABS SPEED SENSOR SIGNAL

(See page BR–86)

PREPARATION

SST (SPECIAL SERVICE TOOLS)

	09308–00010 Oil Seal Puller	Steering knuckle outside bushing removal
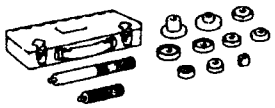	09550–10012 Replacer Set 'B'	
	(09252–10010) No. 1 Replacer Handle	
	(09555–10010) Differential Drive Pinion Rear Bearing Replacer	Steering knuckle outside bushing installation
	09607–60020 Front Wheel Adjusting Nut Wrench	Front axle hub bearing adjusting nut and lock nut
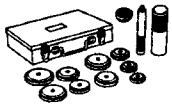	09608–35014 Axle Hub & Drive Pinion Bearing Tool Set	
	(09608–06020) Handle	
	(09608–06150) Rear Hub Outer Bearing Cup Replacer	Oil seal
	(09608–06180) Drive Pinion Rear Bearing Cup Replacer	Dust deflector installation
	(09608–06200) Rear Axle Bearing Replacer	Front axle hub bearing outside race
	(09608–06210) Rear Axle Bearing Replacer	Front axle hub bearing inside race
	09628–62011 Ball Joint Puller	Lower ball joint
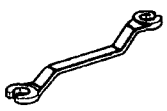	09751–36011 Brake Line Union Nut 10 x 12 mm Wrench	Front brake tube

RECOMMENDED TOOLS

	09905–00012 Snap Ring No.1 Expander.	
	09905–00013 Snap Ring Pliers.	

EQUIPMENT

Dial indicator	
Torque wrench	
Spring tension gauge	

SSM (SPECIAL SERVICE MATERIALS)

08833–00070	Adhesive 1324, THREE BOND 1324 or equivalent	Steering knuckle arm set bolt

A.D.D. CONTROL SYSTEM

COMPONENTS

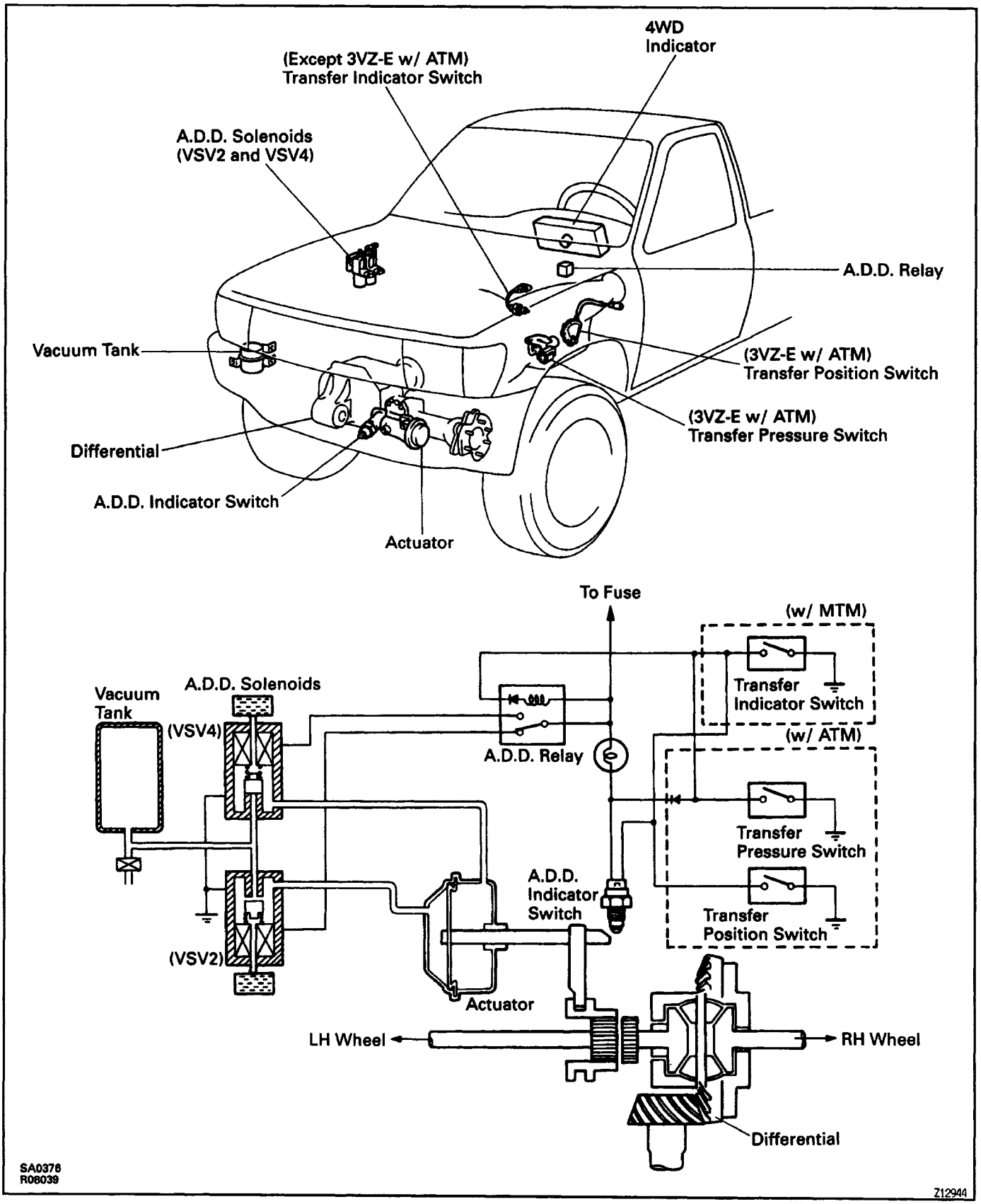

WIRING DIAGRAM

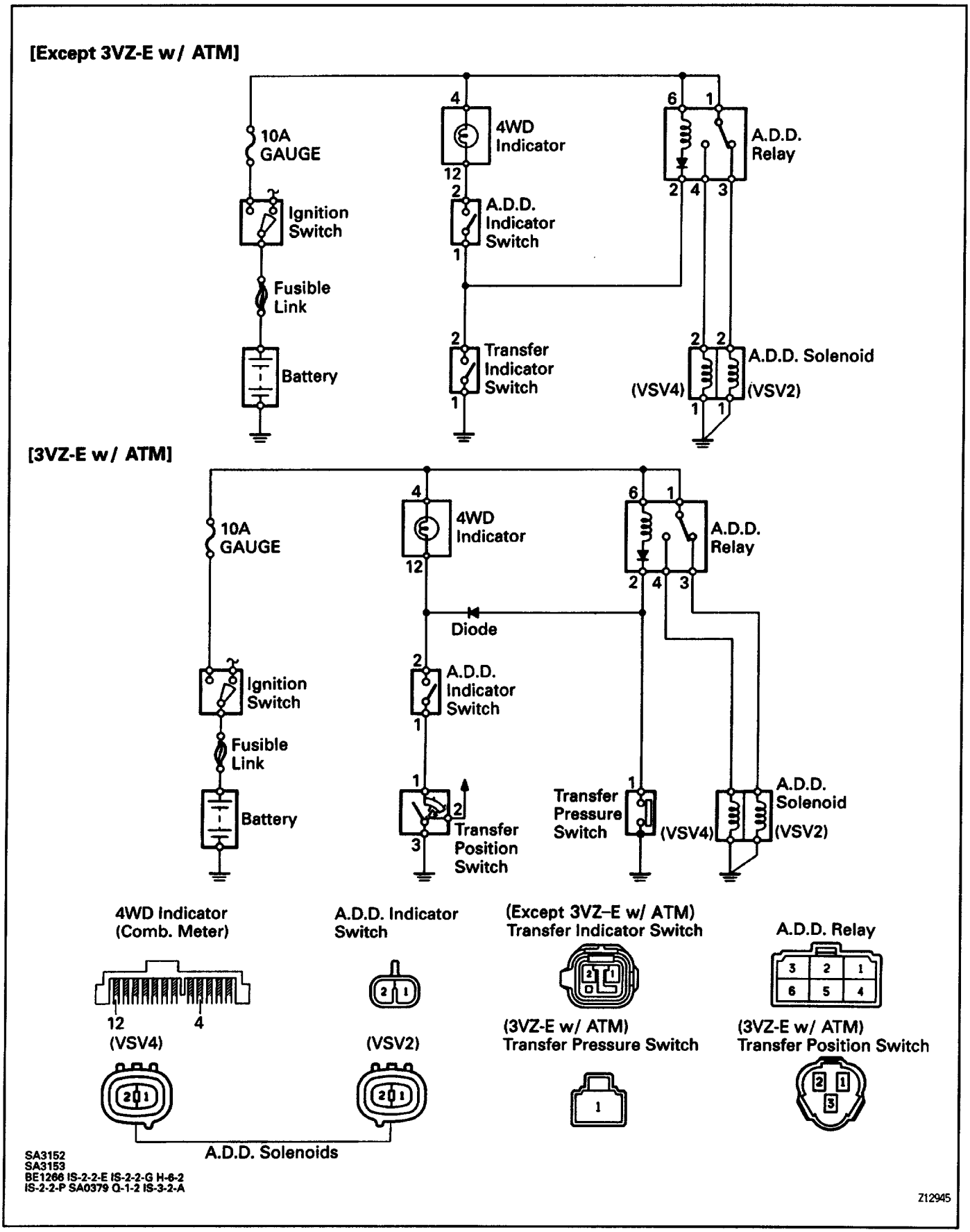

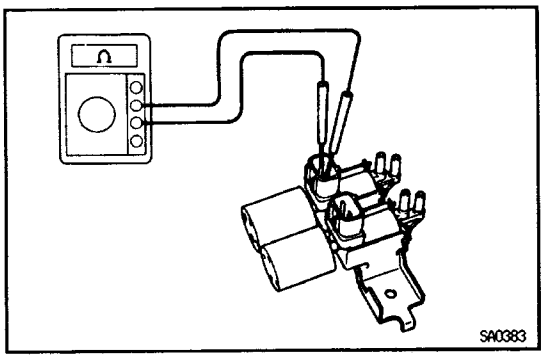

COMPONENTS INSPECTION

1. INSPECT A.D.D. SOLENOIDS

(a) Measure the resistance of the solenoids.

Resistance:

37 –44Ω

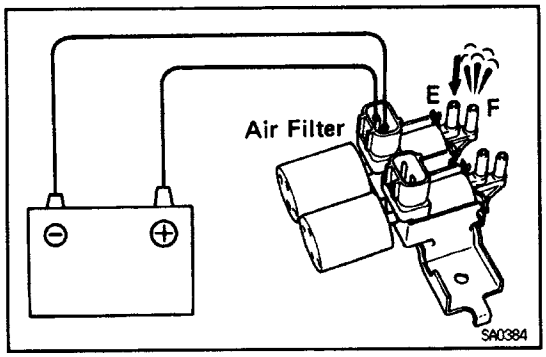

(b) Connect the battery to the solenoid.

Check that air flow from the port E to port F.

Check that air does not flow from the port E to the air filter.

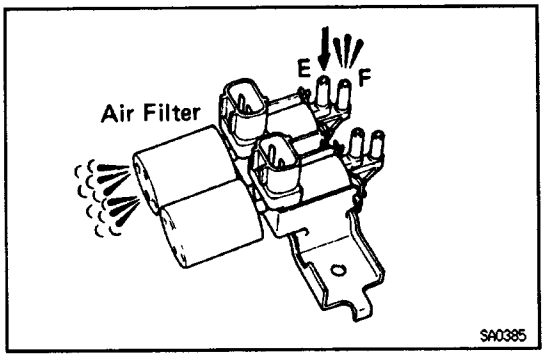

(c) Disconnect the battery positive voltage from the solenoid.

Check that air flows from the port E to the air filter.

Check that air does not flows from the port E to port F.

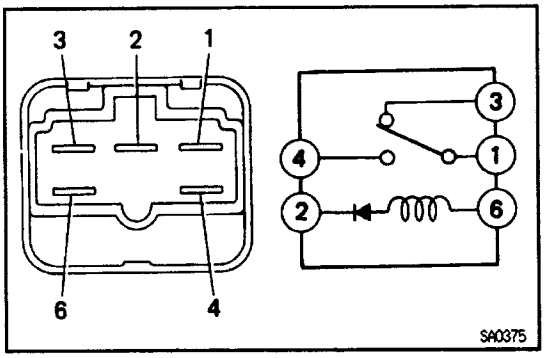

2. INSPECT A.D.D. RELAY

Continuity

Terminal / Condition	1	2	3	4	6
Constant	○	○	○		○
Apply battery positive voltage to terminals 5 and 2.	○			○	

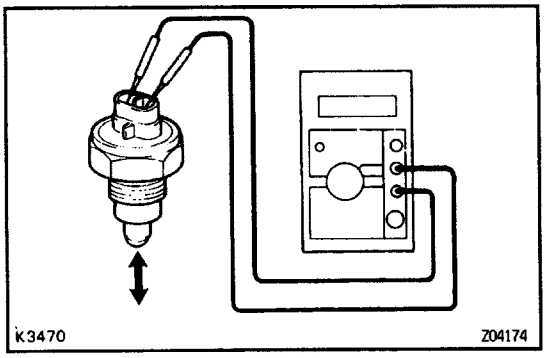

3. INSPECT A.D.D. INDICATOR SWITCH

(a) Using an ohmmeter, check that there is continuing between terminals when the switch is pushed (differential connected position).

(b) Using an ohmmeter, check that there is no continuity when the switch is free (differential disconnected position).

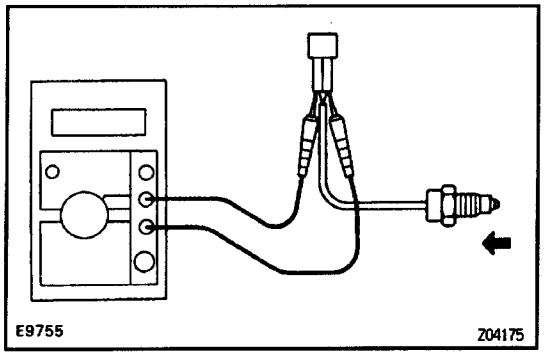

4. Except 3VZ–E w/ATM:

INSPECT TRANSFER INDICATOR SWITCH

(a) Using an ohmmeter, check that there is continuity between terminals when the switch is pushed (transfer 4WD position).

(b) Using an ohmmeter, check that there is no continuity between terminals when the switch is free (transfer H 2 position).

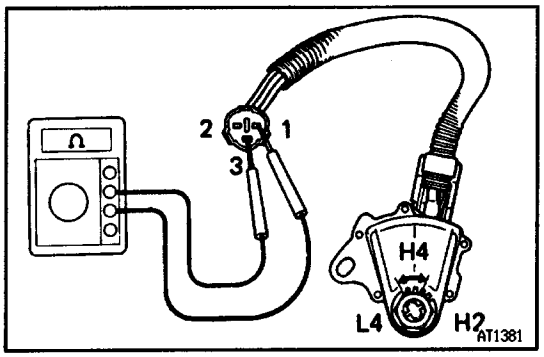

5. 3vz – E w/ ATM:

INSPECT TRANSFER POSITION SWITCH

Using an ohmmeter–, check that there is continuity between each terminal.

Transfer position \ Terminal	1	2	3
H4	O		O
L4	O	O	O
H2			

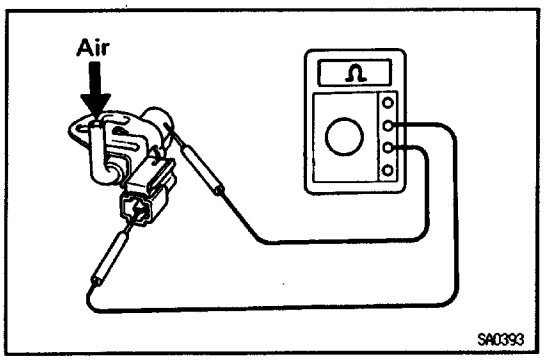

6. 3VZ – E w/ ATM:

INSPECT TRANSFER PRESSURE SWITCH

While blowing compressed air (294 kPa, 43 psi, 3.0 kg/cm2) into the switch, using an ohmmeter, check the continuity between the terminal and switch body.

Resistance:

0Ω

ASSEMBLY REMOVAL AND INSTALLATION

COMPONENTS

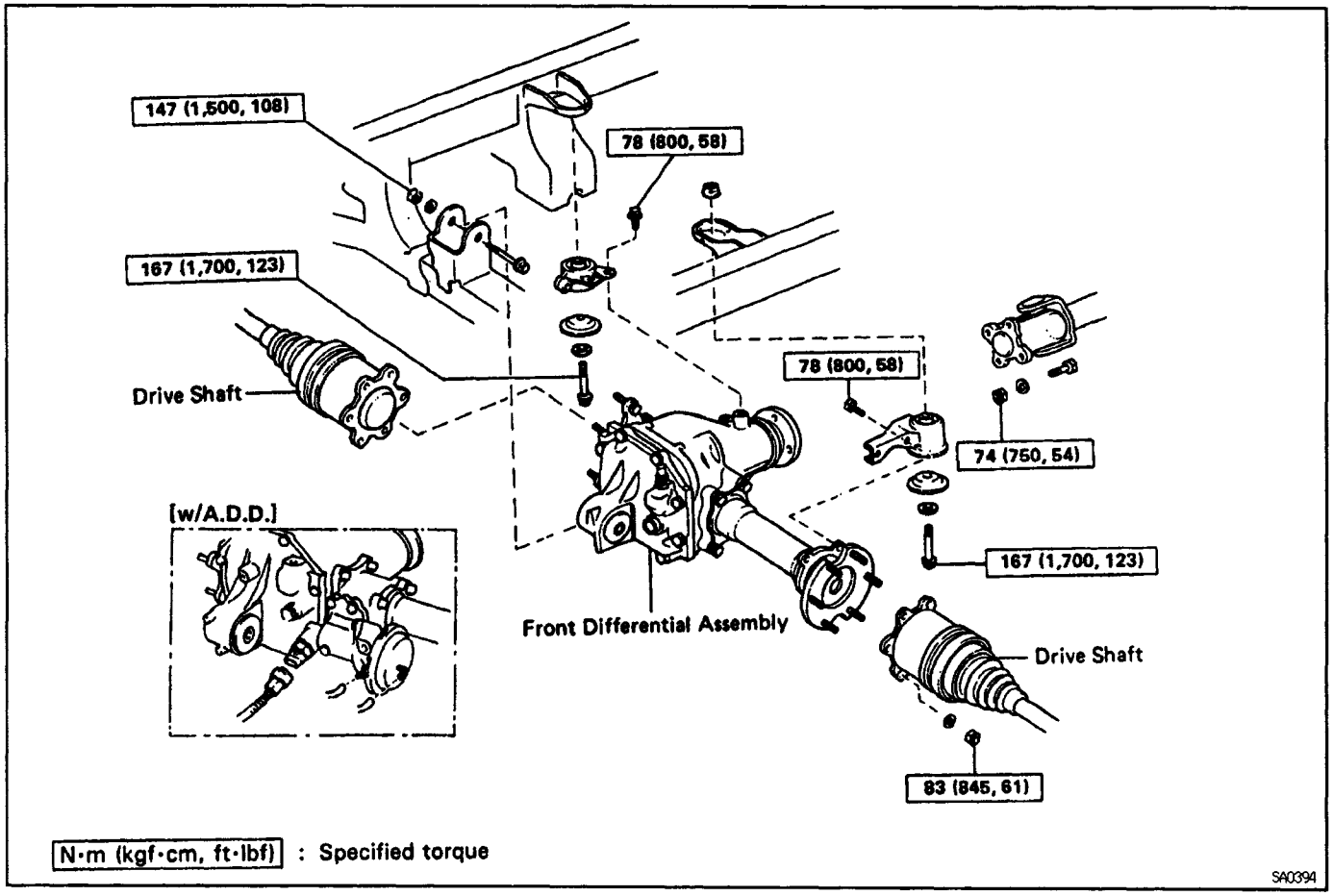

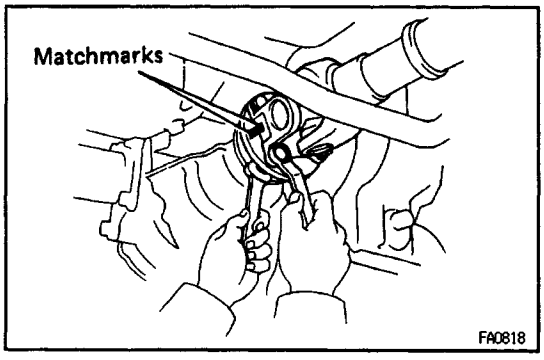

FRONT DIFFERENTIAL REMOVAL

1. DRAIN DIFFERENTIAL OIL

2. DISCONNECT FRONT PROPELLER SHAFT

(a) Place matchmarks on the flanges.

(b) Remove the 4 nuts, washers and bolts, disconnect the front propeller shaft.

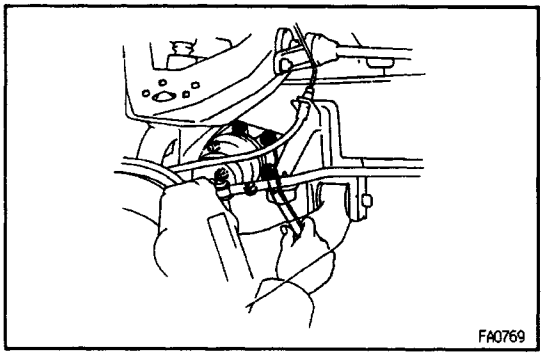

3. DISCONNECT DRIVE SHAFTS FROM SIDE GEAR SHAFT

Loosen the 6 nuts, while depressing the brake pedal, and disconnect the drive shafts from the side gear shaft.

4. w/ A.D.D.:

DISCONNECT VACUUM HOSES AND 4WD INDICATOR SWITCH CONNECTOR

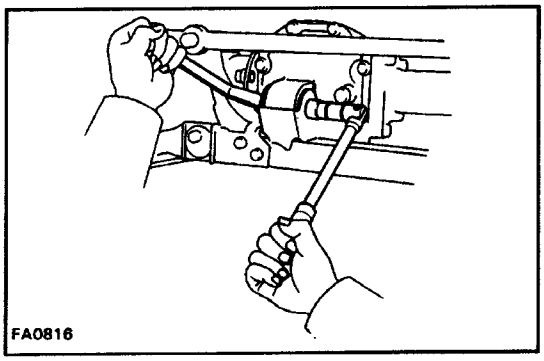

5. REMOVE FRONT DIFFERENTIAL FRONT MOUNTING BOLT AND NUT

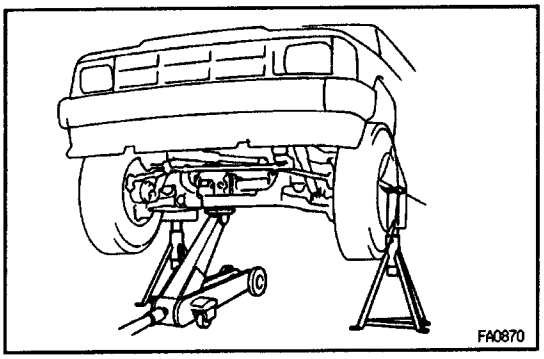

6. REMOVE FRONT DIFFERENTIAL ASSEMBLY

(a) Support the front differential with a jack.

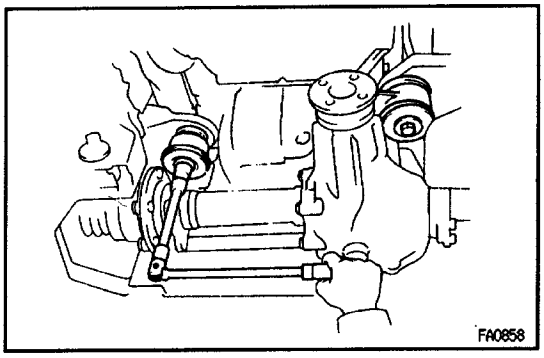

(b) Remove the left and right rear mounting bolts, and remove the front differential.

(c) Lower the jack and remove the differential assembly.

FRONT DIFFERENTIAL INSTALLATION

1. INSTALL FRONT DIFFERENTIAL ASSEMBLY

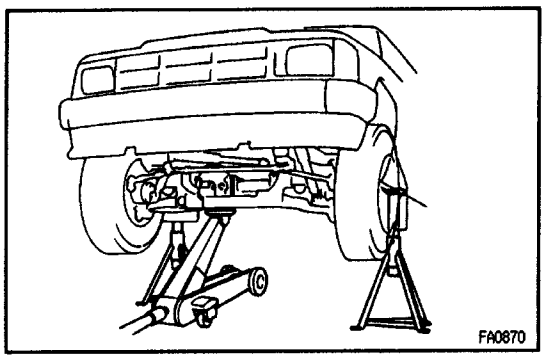

(a) Install the front differential to the frame, and support with a jack.

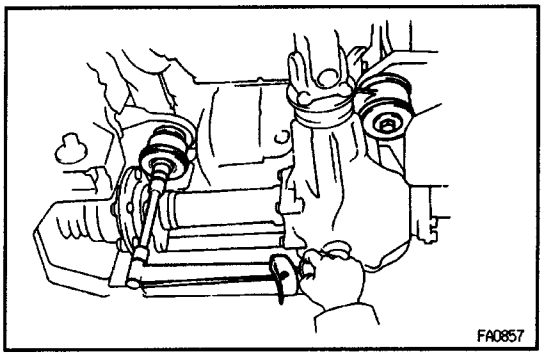

(b) Install and torque the left and right rear mounting bolts.

Torque: 167 N–m (1,700 kgf–cm, 123 ft–lbf)

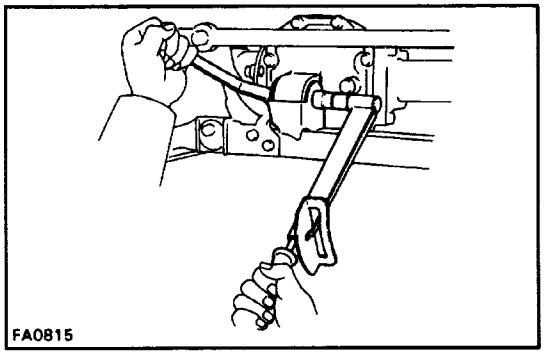

2. INSTALL DIFFERENTIAL FRONT MOUNTING BOLT AND NUT

Torque: 147 N–m (1,500 kgf–cm, 108 ft–lbf)

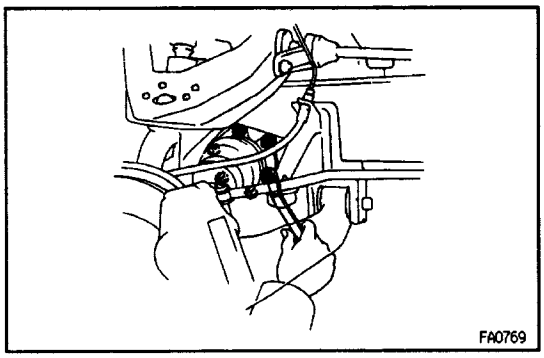

3. w/ A.D.D.:

CONNECT VACUUM HOSES AND 4WD INDICATOR SWITCH CONNECTOR

4. CONNECT DRIVE SHAFTS TO SIDE GEAR SHAFT

Connect the drive shafts to the side gear shaft, and install and torque the nuts while depressing the brake pedal.

Torque: 83 N–m (845 kgf–cm, 61 ft–lbf)

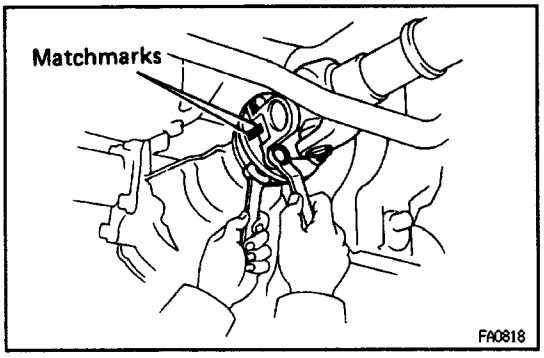

5. CONNECT FRONT PROPELLER SHAFT

(a) Align the matchmarks and connect the propeller shaft to the flange with the 4 bolts, washers and nuts.

(b) Torque the bolts.

Torque: 74 N–m (750 kgf–cm, 54 ft–lbf)

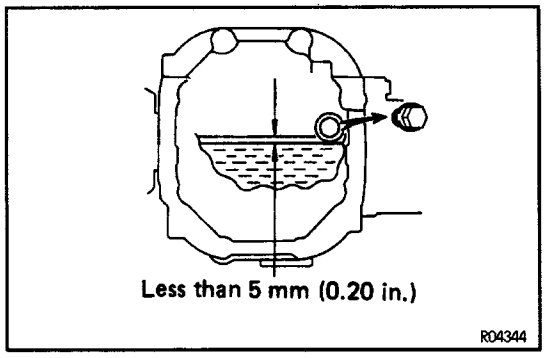

6. FILL DIFFERENTIAL WITH GEAR OIL

w/ A. D. D.:

Oil type:

Hypoid gear oil API GL–5

Recommended oil viscosity:

SAE 75W–90

Capacity:

1.86 liters (1.97 US qts, 1.64 Imp.qts)

w/o A.D.D.:

Oil type:

Hypoid gear oil API GL–5

Recommended oil viscosity:

Above –18˚ C (0˚ F) SAE 90

Below –18˚ C (0˚ F) SAE 80W or 80W – 90

Capacity:

1.60 liters (1.69 US qts, 1.41 Imp.qts)

FRONT DIFFERENTIAL

DESCRIPTION

The differential gear consists of 2 pinion gears, 2 side shafts, intermediate shaft (w/ A.D.D.) A.D.D. actuator (w/ A.D.D.).

The A.D.D. (Automatic Disconnecting Differential) can be shifted from the 2WD position to the 4WD position freely, even while the vehicle is moving.

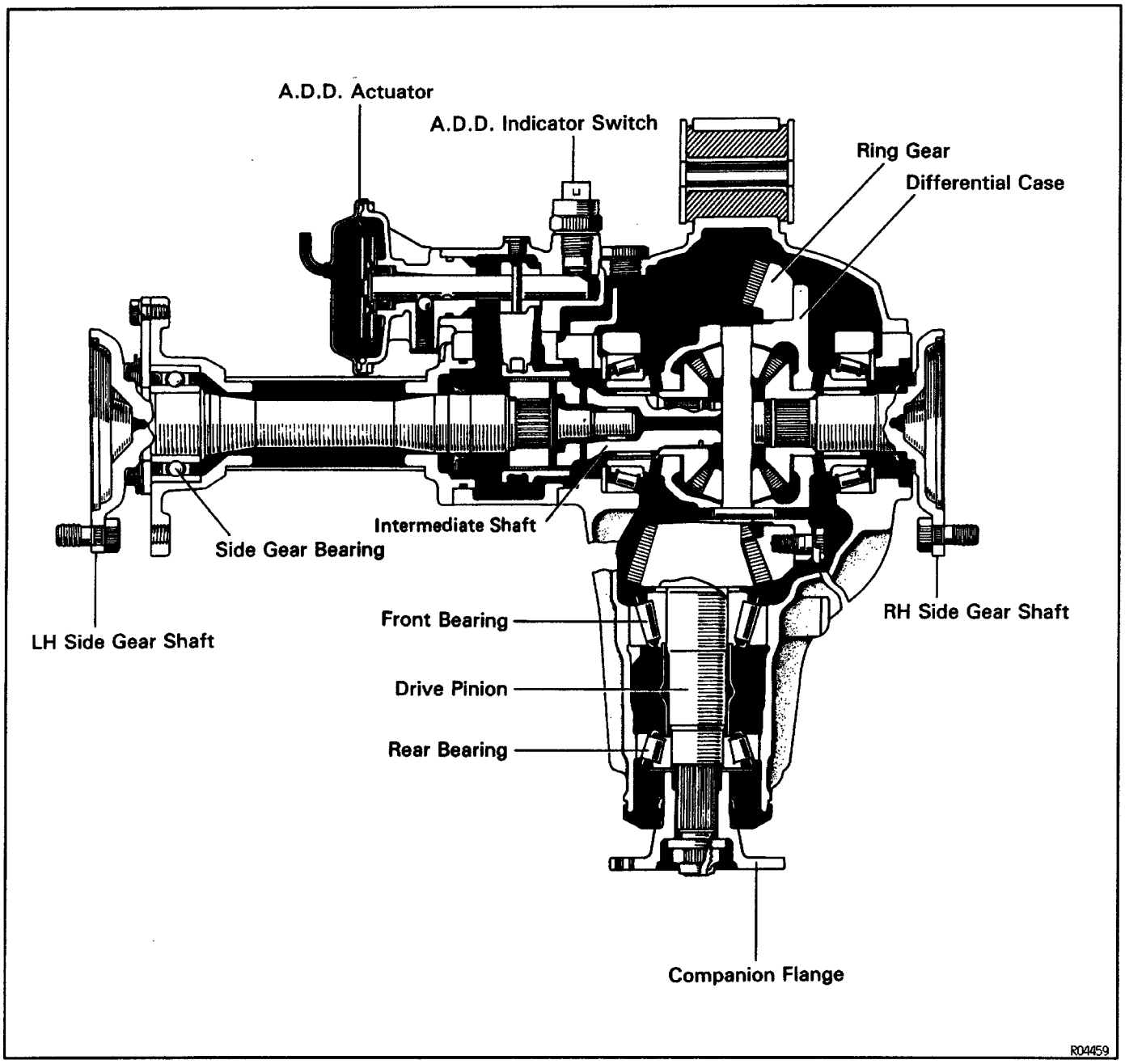

DIFFERENTIAL CARRIER (wo A.D.D.)

COMPONENTS

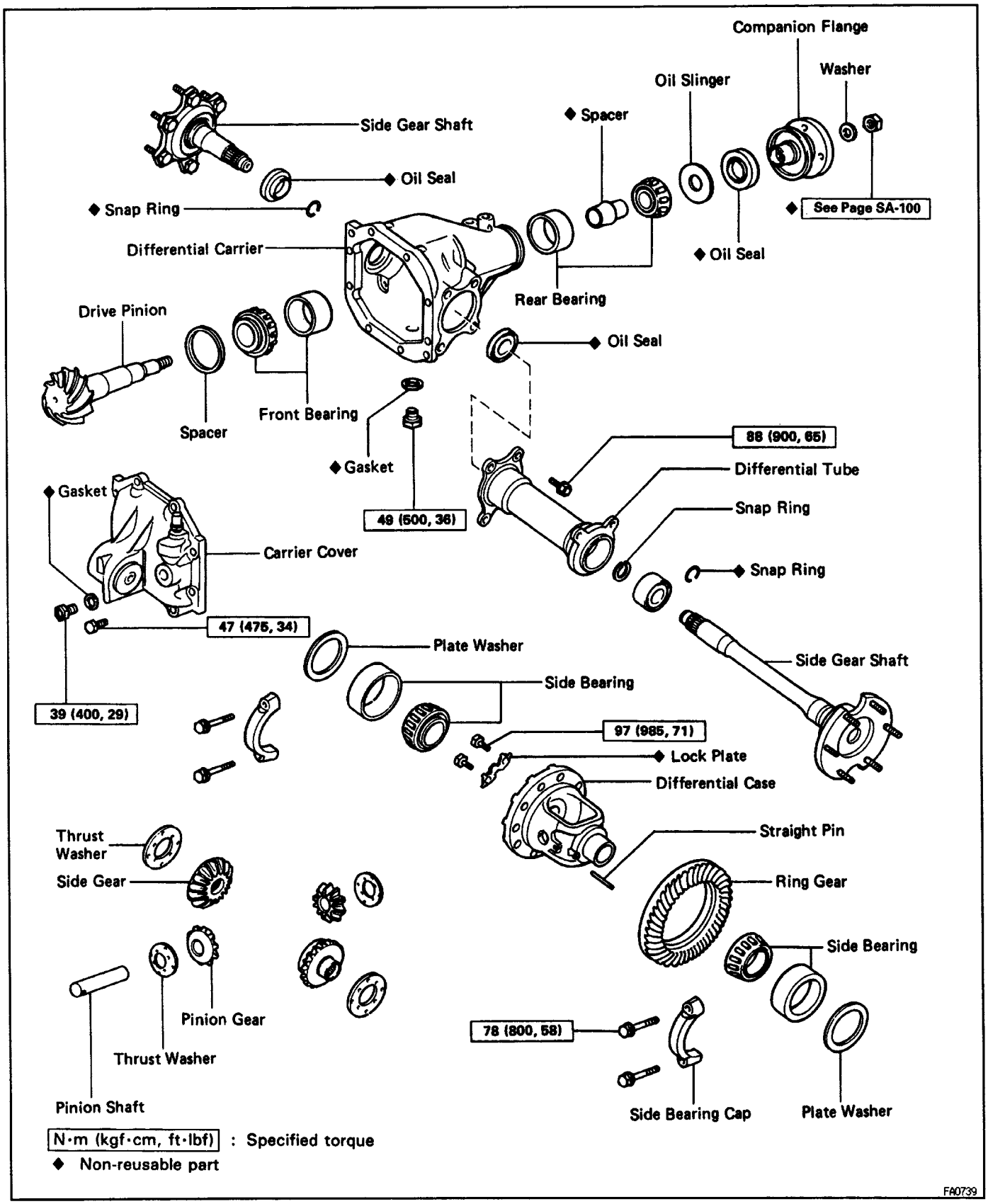

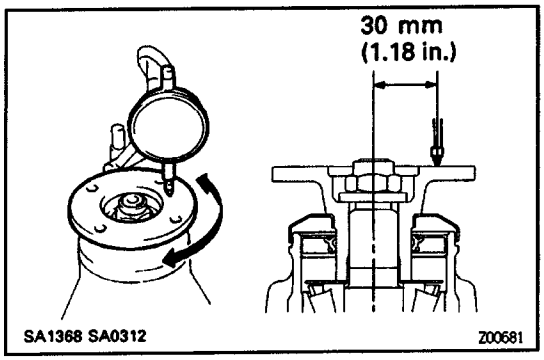

DIFFERENTIAL CARRIER INSPECTION

1. CHECK RUNOUT OF COMPANION FLANGE

Using a dial indicator, measure the vertical and lateral runout of the companion flange.

Maximum vertical runout:

0.10 mm (0.0039 in.)

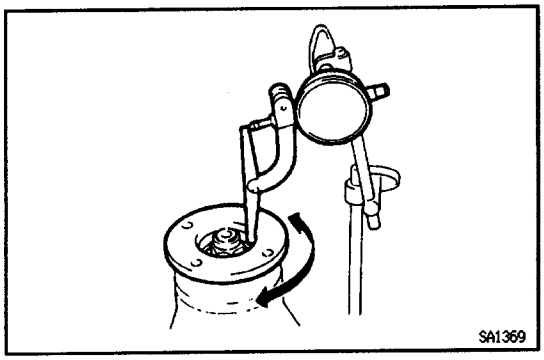

Maximum lateral runout:

0.10 mm (0.0039 in.)

If the runout is greater than the maximum, replace the companion flange.

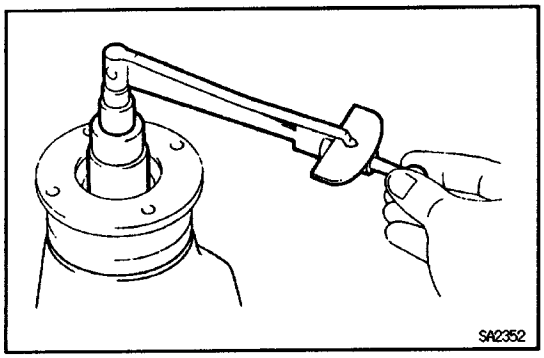

2. CHECK DRIVE PINION PRELOAD

Using a torque wrench, measure the drive pinion preload using the backlash of the drive pinion and ring gear.

Preload (at starting):

0.6 – 1.0 N–m (6 – 10 kgf–cm, 5.2 – 8.7 in.–lbf)

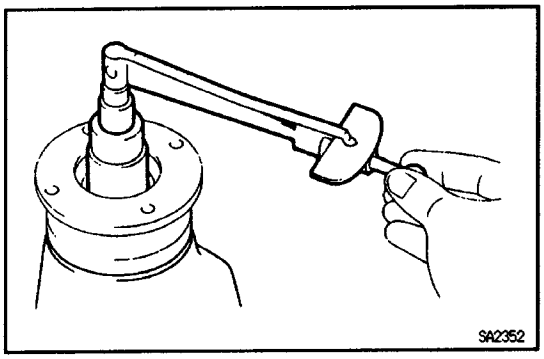

3. CHECK TOTAL PRELOAD

Using a torque wrench, measure the total preload.

Total preload (at starting):

In addition to drive pinion preload

0.4 – 0.6 N–m (4 –6 kgf–cm, 3.5 – 5.2 in.–lbf)

If necessary, disassemble and inspect the differential.

DIFFERENTIAL CARRIER DISASSEMBLY

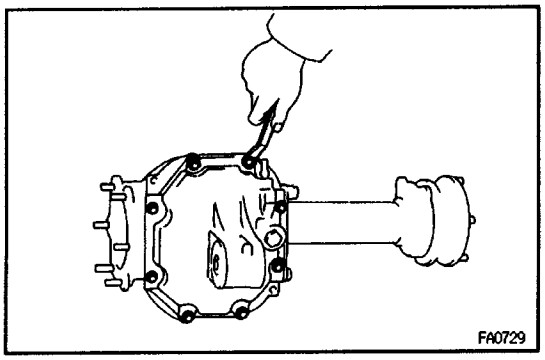

1. REMOVE DIFFERENTIAL CARRIER COVER

Remove the 8 bolts and tap off the cover with a plastic–faced hammer.

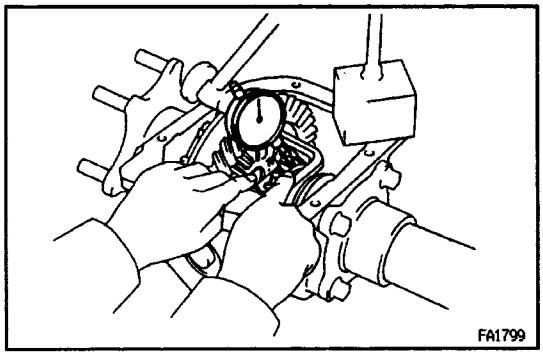

2. CHECK SIDE GEAR BACKLASH

Measure the side gear backlash while holding 1 pinion gear toward the case.

Backlash:

0.05 – 0.20 mm (0.0020 – 0.0079 in.)

If the backlash is out of specification, install the correct thrust washers. (See page SA–92)

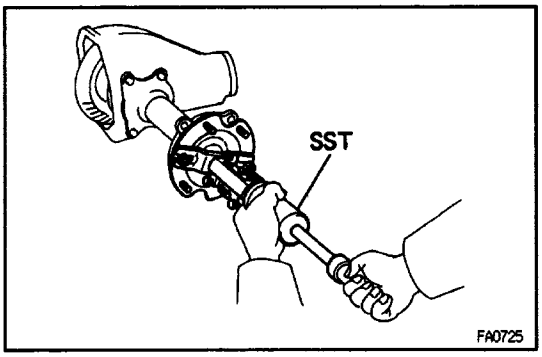

3. REMOVE SIDE GEAR SHAFTS

Using SST, remove the side gear shafts.

SST 09910–00015 (09911 –00011, 09912–00010, 09914–00011)

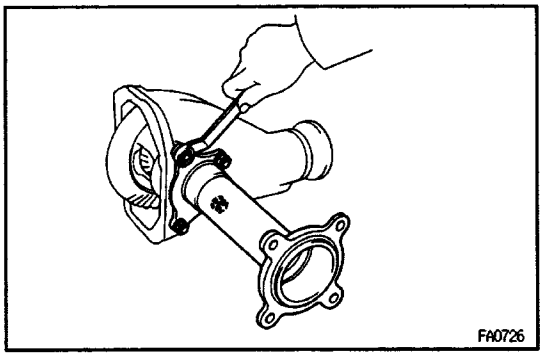

4. REMOVE DIFFERENTIAL TUBE

Remove the 4 bolts and differential tube.

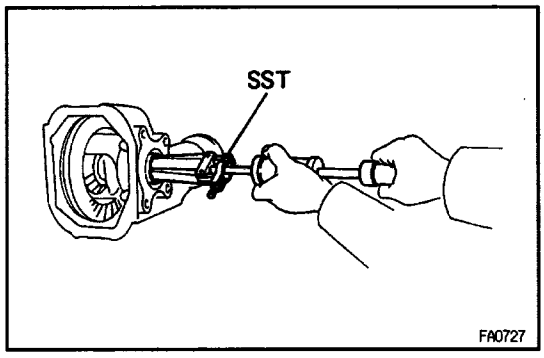

5. REMOVE SIDE GEAR SHAFT OIL SEALS

Using SST, remove the right and left side gear shaft oil seals.

SST 09308 – 00010

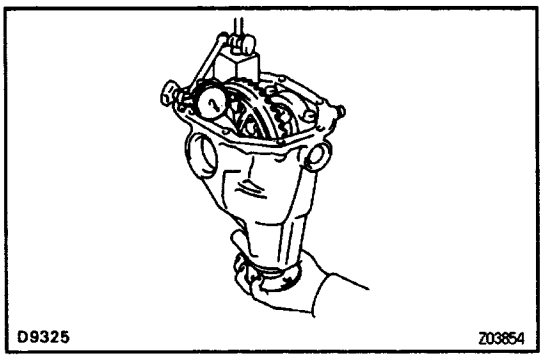

6. CHECK RING GEAR RUNOUT

Using a dial indicator, measure the ring gear runout.

Maximum runout:

0.07 mm (0.0028 in.)

If the runout is greater than the maximum, replace the ring gear and drive pinion as a set.

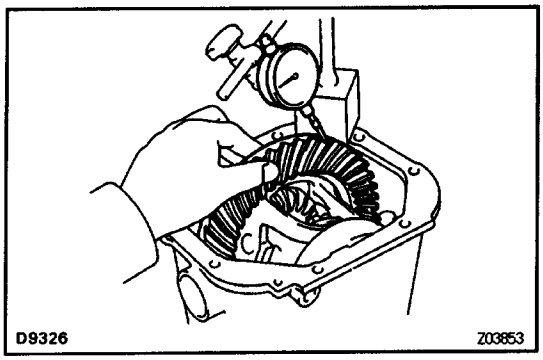

7. CHECK RING GEAR BACKLASH

(a) Fix the dial indicator on the tooth surface at a 90° angle.

(b) Holding the drive pinion flange, measure the ring gear backlash.

Backlash:

0.13 – 0.18 mm (0.0051 – 0.0071 in.)

If the backlash is not within specification, adjust the ring gear backlash.

HINT: Measure from 3 or more places on the circumference of the ring gear.

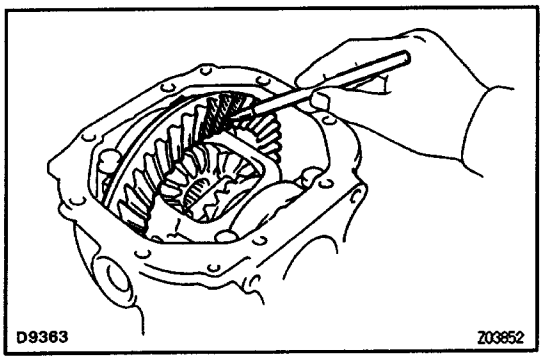

8. CHECK TOOTH CONTACT BETWEEN RING GEAR AND DRIVE PINION

(See page SA–99)

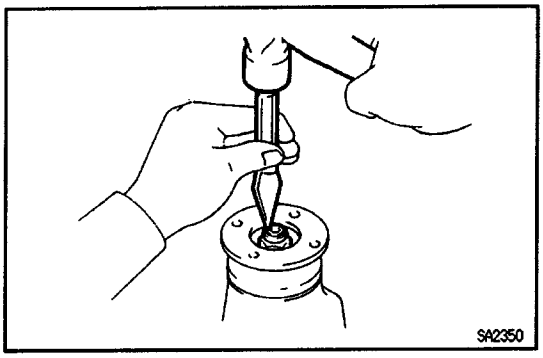

9. REMOVE COMPANION FLANGE

(a) Using a chisel and hammer, unstake the nut.

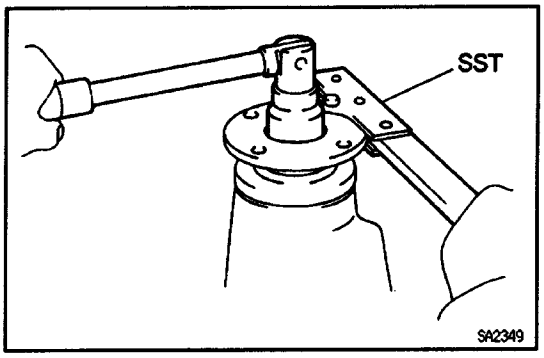

(b) Using SST to hold the flange, remove the nut and plate washer.

SST 09330–00021

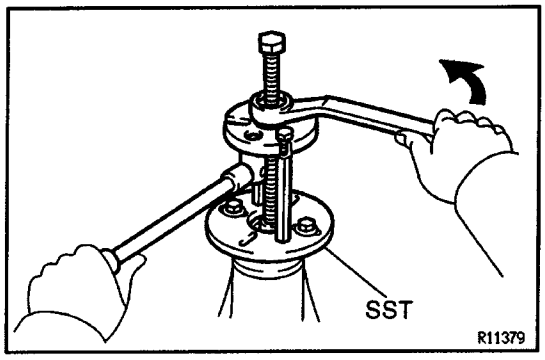

(c) Using SST, remove the companion flange.

SST 09950–30010

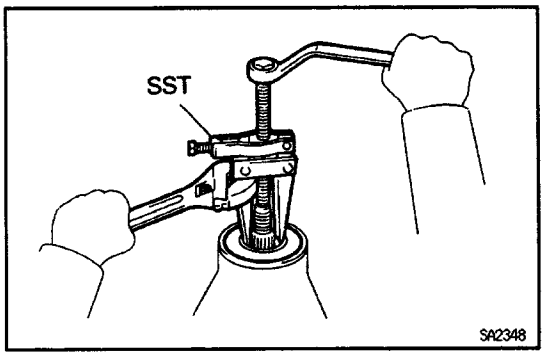

10. REMOVE OIL SEAL AND OIL SLINGER

(a) Using SST, remove the oil seal from the differential carrier.

SST 09308–10010

(b) Remove the oil slinger.

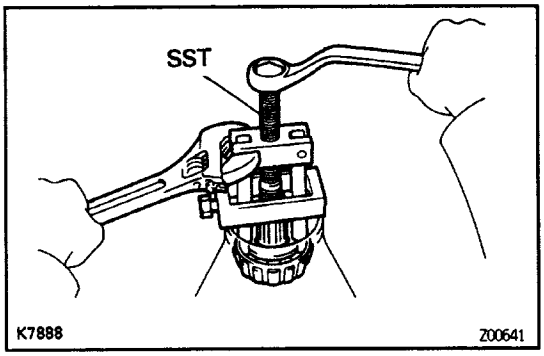

11. REMOVE REAR BEARING AND BEARING SPACER

(a) Using SST, remove the rear bearing from the drive pinion.

SST 09658–30010

(b) Remove the bearing spacer.

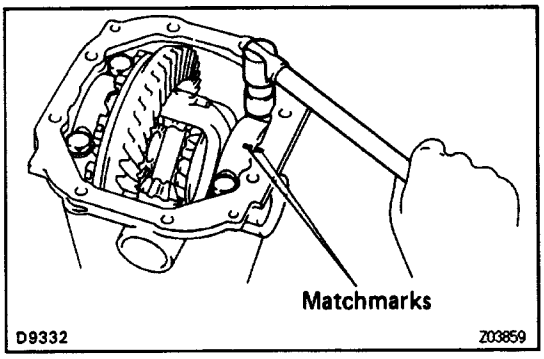

12. REMOVE DIFFERENTIAL CASE ASSEMBLY

(a) Place matchmarks on the bearing cap and differential carrier.

(b) Remove the 4 bolts and 2 bearing caps.

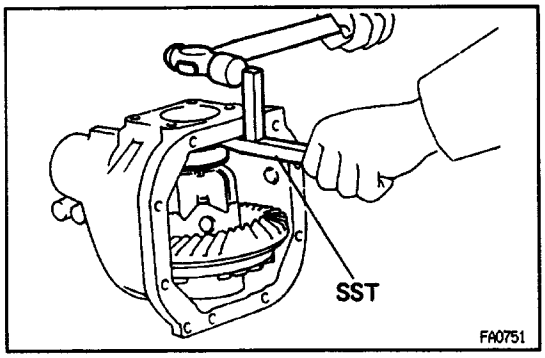

(c) Using SST and a hammer, remove the 2 side plate washers.

SST 09504 – 22011

HINT: Measure the plate washer and note the thickness.

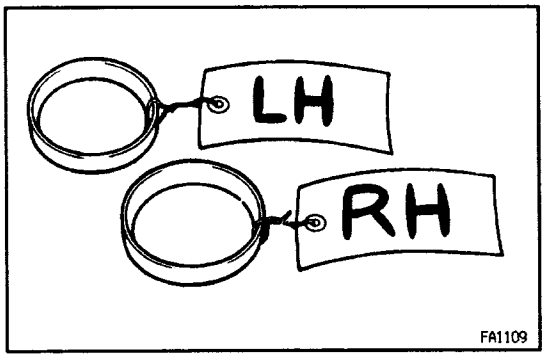

(d) Remove the differential case with the bearing outer races from the differential carrier.

HINT: Tag the bearing outer races to show the location for reassembly.

13. REMOVE DRIVE PINION FROM DIFFERENTIAL CARRIER

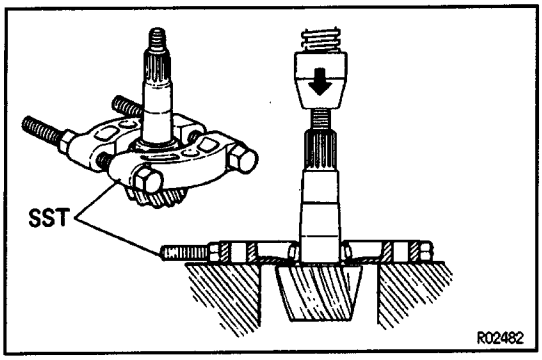

14. REMOVE DRIVE PINION FRONT BEARING

Using SST and a press, remove the bearing from the drive pinion.

SST 09950–00020

HINT: If the drive pinion or ring gear are damaged replace them as a set.

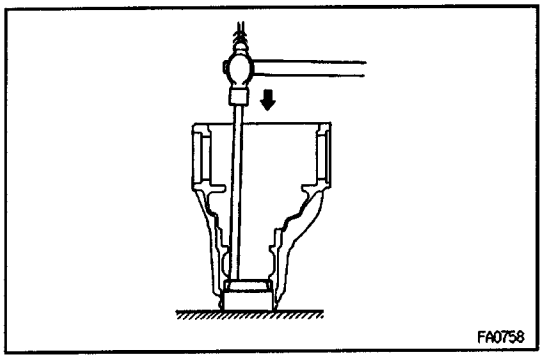

15. REMOVE DRIVE PINION BEARING OUTER RACES

Using a brass bar and hammer, drive out the outer races from the differential carrier.

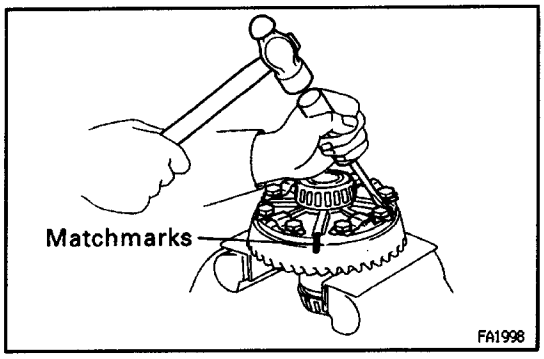

16. REMOVE RING GEAR

(a) Place matchmarks on the ring gear and differential case.

(b) Using a screwdriver and hammer, unstake the lock plates.

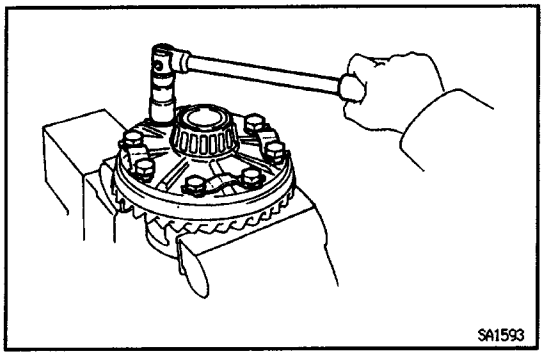

(c) Remove the 10 bolts and 5 lock plates.

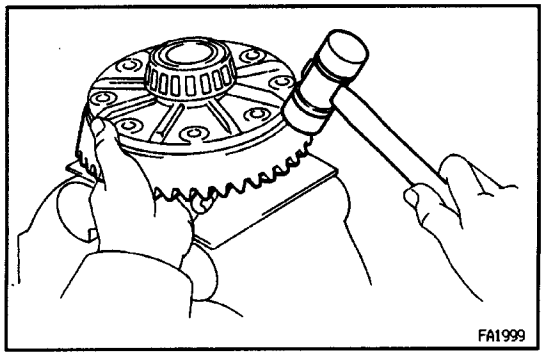

(d) Using a plastic–faced hammer, tap on the ring gear to separate it from the differential case.

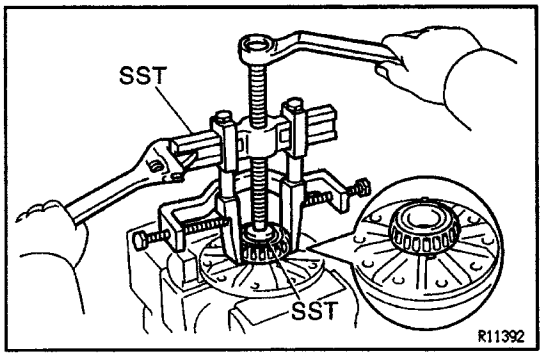

17. REMOVE SIDE BEARINGS

Using SST, remove the side bearings from the differential case.

SST 09608–30012 (09608–04060), 09950–40010

HINT: Fix the claws of SST to the notch in the differential case.

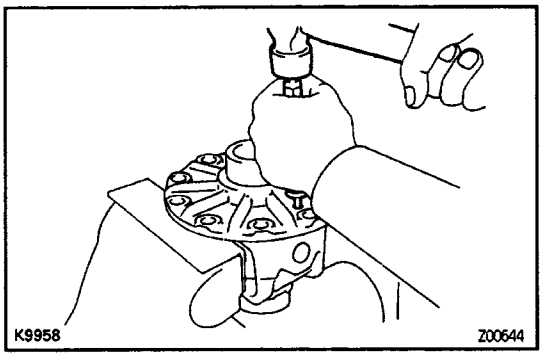

18. DISASSEMBLE DIFFERENTIAL CASE ASSEMBLY

(a) Using a pin punch and hammer, drive out the straight pin.

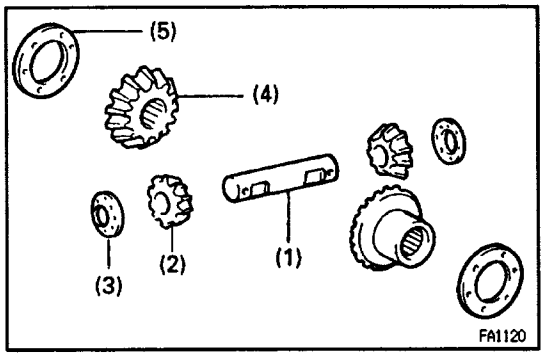

(b) Remove these parts:

(1) Pinion shaft
(2) Pinion gears
(3) Pinion gear thrust washers
(4) Side gears
(5) Side gear thrust washers

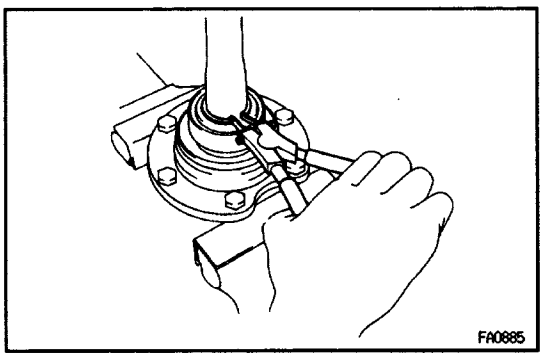

SIDE GEAR SHAFT BEARING AND DUST COVER REPLACEMENT

1. REPLACE LH SIDE GEAR SHAFT BEARING AND DUST COVER

(a) Using a snap ring expander, remove the snap ring.

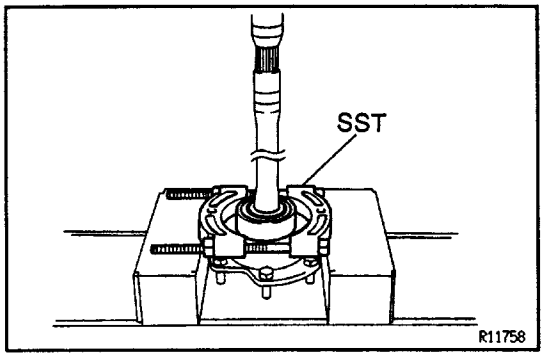

(b) Using SST and a press, remove the bearing.

SST 09950–00020

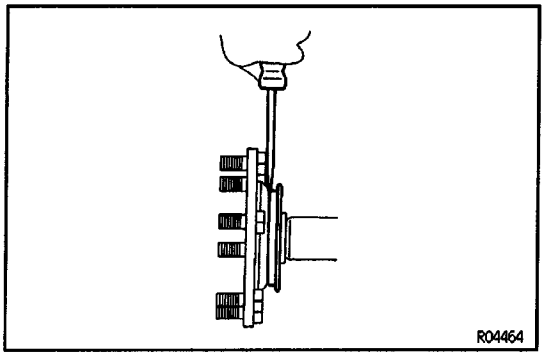

(c) Using a screwdriver and hammer, remove the dust cover.

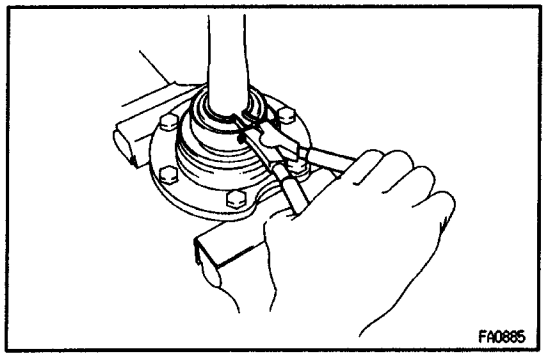

(d) Using a snap ring expander, install a new snap ring.

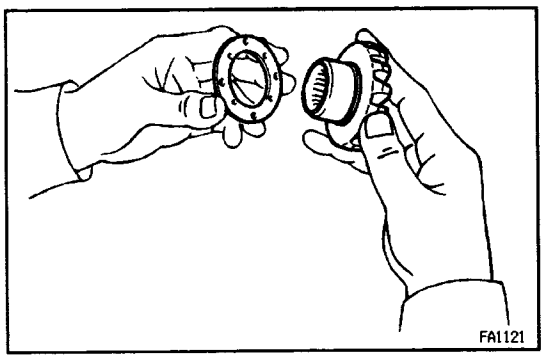

DIFFERENTIAL CARRIER ASSEMBLY

1. ADJUST DIFFERENTIAL SIDE GEAR SHAFT BACK–LASH

(a) Install the proper thrust washers on the side gears.
HINT: Using the table below, select thrust washers which will ensure that the backlash is within specifications.

Washer thickness

Thickness mm (in.)	Thickness mm (in.)
0.96–1.04 (0.0378–0.0409)	1.16–1.24 (0.0457–0.0488)
1.06–1.14 (0.0417–0.0449)	1.26–1.34 (0.0496–0.0528)

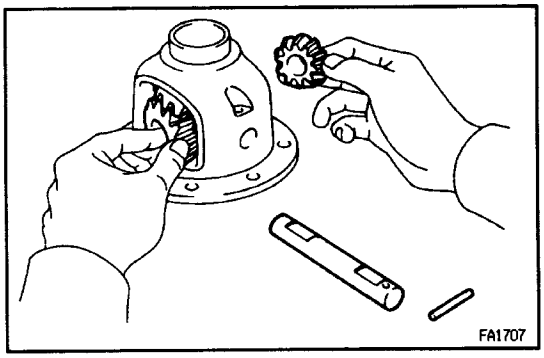

(b) Install the side gears, pinion gears, pinion gear thrust washers and pinion shaft in the differential case.
HINT: Align the holes of the differential case and pinion shaft.

(c) Push the side gear shafts gently into the differential case by hand and install them.

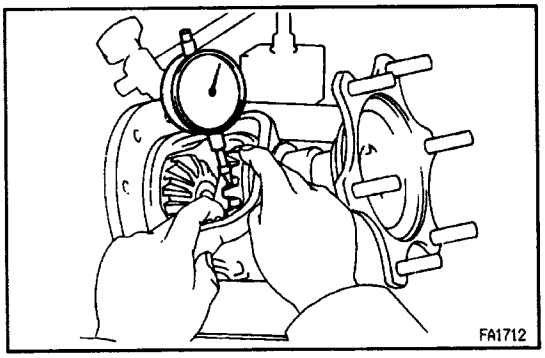

(d) Measure the side gear backlash while holding 1 pinion gear toward the differential case.

Backlash:

0.05 – 0.20 mm (0.0020 – 0.0079 in.)

If the backlash is not within specification, install side gear thrust washers with different thicknesses.

(e) Remove the side gear shaft.

2. INSTALL STRAIGHT PIN AND STAKE DIFFERENTIAL CASE

(a) Using a hammer and punch, install the straight pin through the differential case and hole of the pinion shaft.

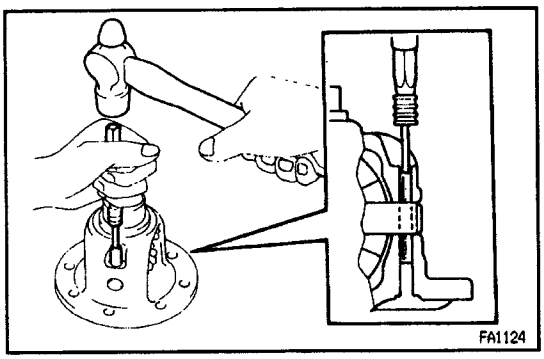

(b) Stake the differential case.

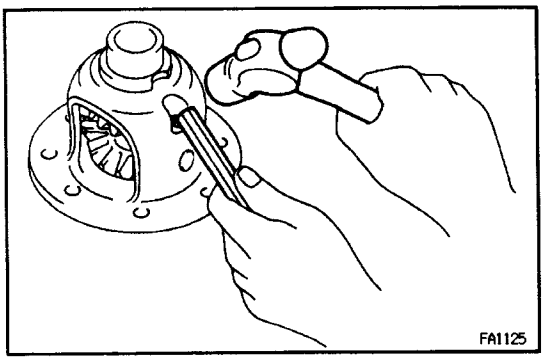

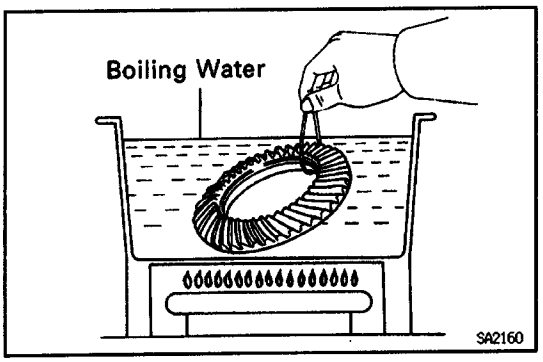

3. INSTALL RING GEAR ON DIFFERENTIAL CASE

(a) Clean the contact surfaces of the differential case and ring gear.

(b) Heat the ring gear to about 100°C (212°F) in boiling water.

(c) Carefully remove the ring gear from the water.

(d) After the moisture on the ring gear has completely evaporated, quickly install the ring gear to the differential case.

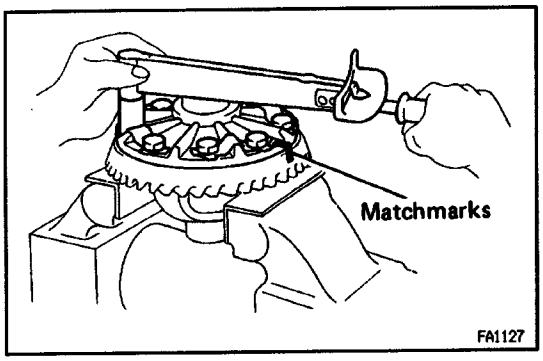

HINT: Align the matchmarks on the ring gear and the differential case.

(e) Temporarily install 5 new lock plates and 10 bolts so that the bolt holes in the ring gear and differential case are not misaligned.

NOTICE: The ring gear seat bolts should not be tightened until the ring gear has cooled sufficiently.

(f) After the ring gear has cooled sufficiently, torque the ring gear set bolts.

Torque: 97 N–m (985 kgf–cm, 71 ft–lbf)

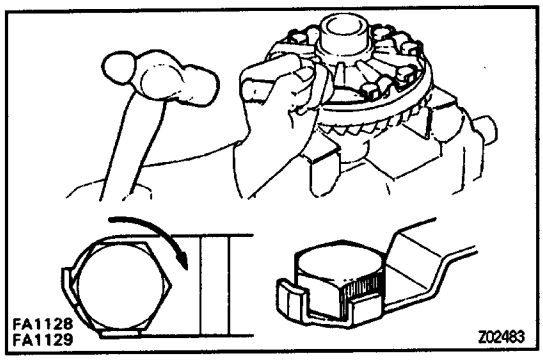

(g) Using a hammer and drift punch, stake the lock plates.

HINT: Stake 1 claw flush with the flat surface of the nut. For the claw contacting the protruding portion of the nut, stake only the half portion of the tightening side.

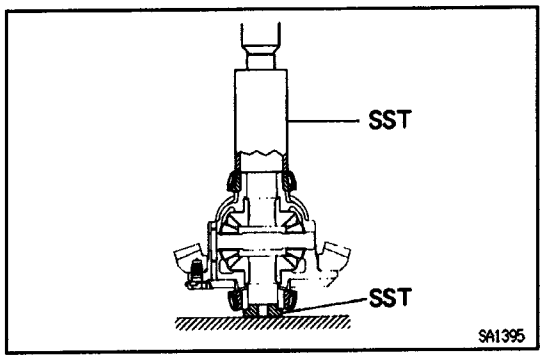

4. INSTALL SIDE BEARINGS

Using SST and a press, press the bearing into the differential case.

SST 09226–10010, 09550–10012 (09558– 10010)

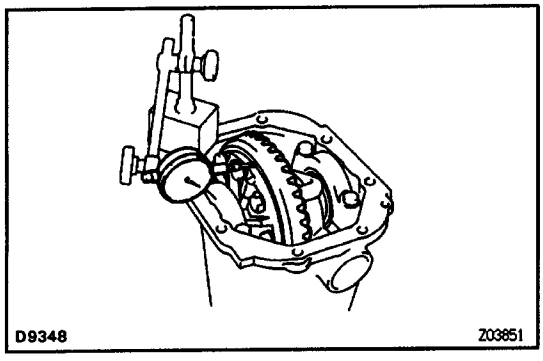

6. CHECK RING GEAR RUNOUT

(a) Install the differential case onto the carrier and install the plate washers to where there is no play in the bearing. (See page SA–95)

(b) Install bearing caps. (See page SA–98)

(c) Using a dial indicator, measure the runout of ring gear.

Maximum runout:

0.07 mm (0.0028 in.)

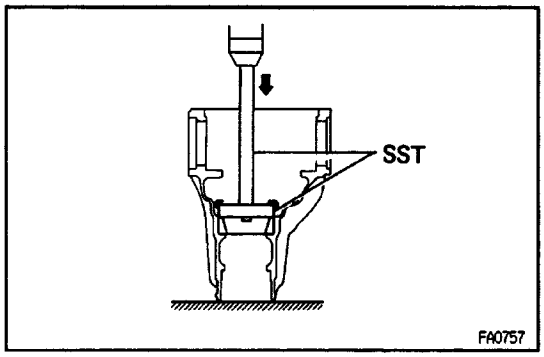

6. INSTALL DRIVE PINION FRONT AND REAR BEARING OUTER RACES

Using SST and a press, install new outer races.
Front:
SST 09608–35014 (09608–06020, 09608–06120)
Rear:
SST 09608 – 35014 (09608 – 06020, 09608 – 04110)

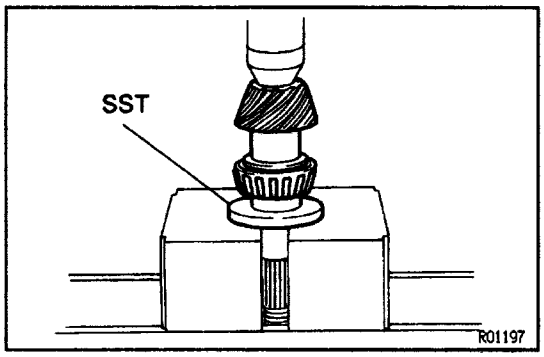

7. INSTALL DRIVE PINION FRONT BEARING

(a) Install the washer on the drive pinion.
HINT: First fit a washer with the same thickness as the washer which was removed, then after checking the tooth contact pattern, replace the washer with one of a different thickness if necessary.
(b) Using SST, press in the front bearing onto the drive pinion.
SST 09506–30012

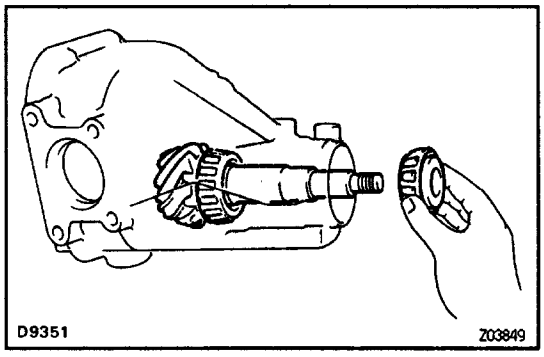

8. TEMPORARILY ADJUST DRIVE PINION PRELOAD

(a) Install the drive pinion, rear bearing and oil slinger.
HINT: Assemble the spacer and oil seal after adjusting the gear contact pattern.

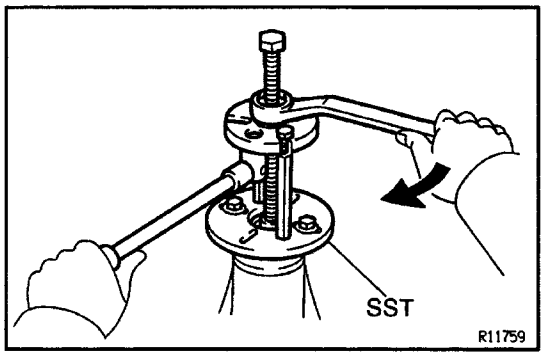

(b) Using SST, install the companion flange.
SST 09950–30010
(c) Coat the threads of the nut with MP grease.

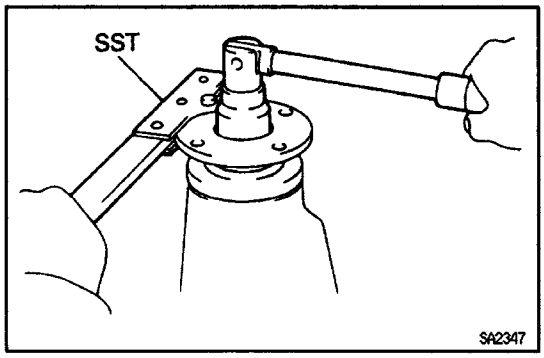

(d) Adjust the drive pinion preload by tightening the companion flange nut.
Using SST to hold the flange, tighten the nut.
SST 09330–00021

NOTICE: A: there Is no spacer, tighten the nut a little at a time, being careful not to overtighten it.

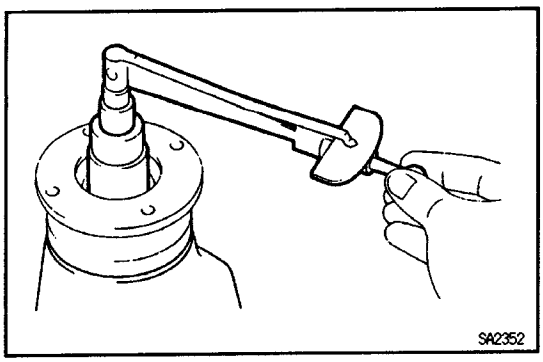

(e) Using a torque wrench, measure the preload.

New bearing preload (at starting):

1.2 – 1.9 N–m (12 – 18 kgf–cm, 10.4 – 16.5 in.–lbf)

Reused bearing preload (at starting):

0.6 – 1.0 N–m (6 – 10 kgf/cm, 5.2 – 8.7 in.–lbf)

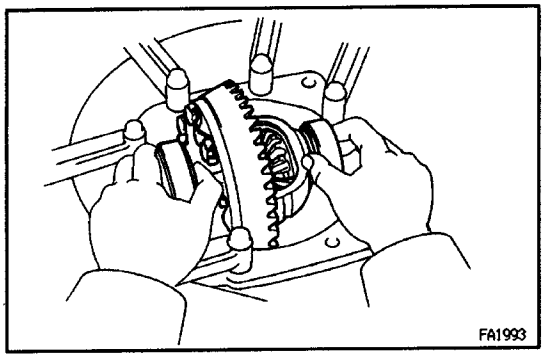

9. INSTALL DIFFERENTIAL CASE IN DIFFERENTIAL CARRIER

(a) Place the bearing outer races on their respective bearings. Check that the left and right outer races are not interchanged.

(b) Install the differential case in the differential carrier.

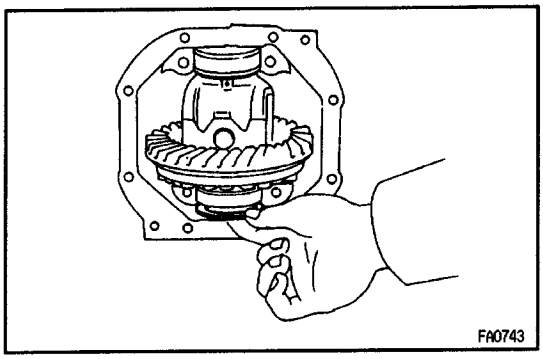

10. ADJUST RING GEAR BACKLASH

(a) Only install the plate washer on the ring gear back side.

HINT: Ensure that the ring gear has backlash.

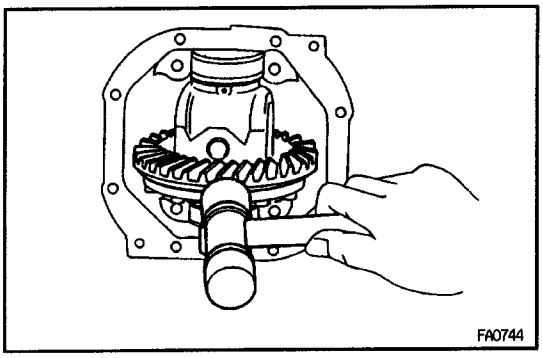

(b) Tap on the ring gear with a plastic–faced hammer so that the washer fit to the bearing.

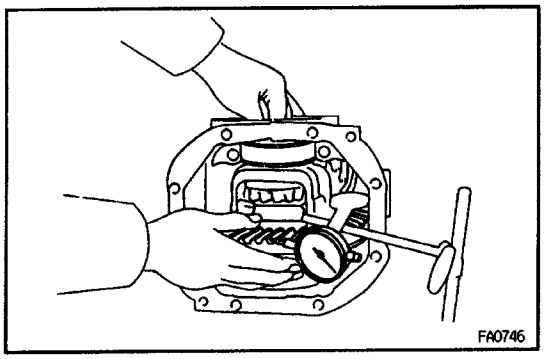

(c) Hold the side bearing boss on the teeth surface of the ring gear and measure the backlash.

Backlash (reference):

0.13 mm (0.0051 in.)

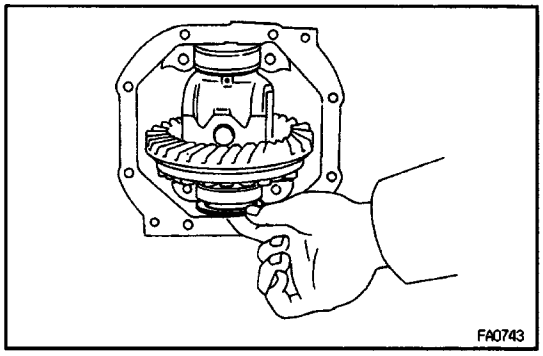

(d) Using the backlash as reference, select a ring gear back side plate washer. (See page SA–98)

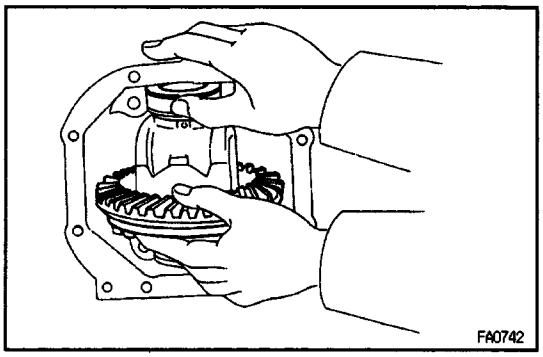

(e) Select a ring gear teeth side plate washer with a thickness which eliminates any clearance between the outer race and case.

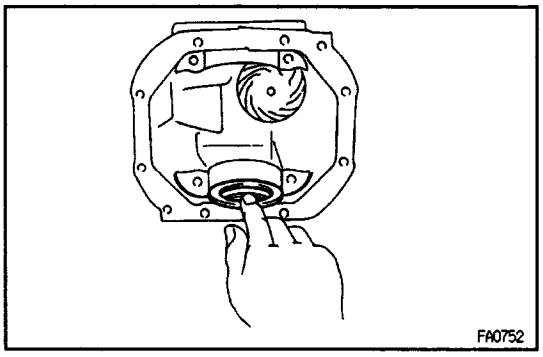

(f) Remove the plate washers and differential case.
(g) Install the plate washer into the ring gear back side of the carrier.

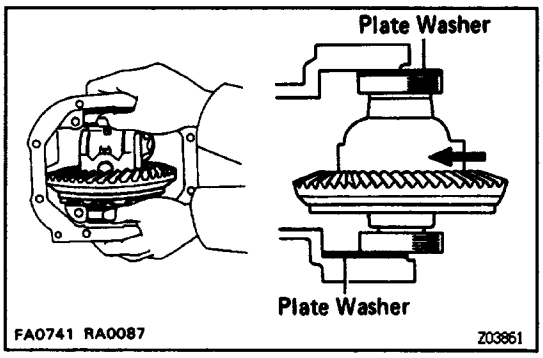

(h) Place the other plate washer onto the differential case together with the outer race, and install the differential case with the outer race into the carrier.

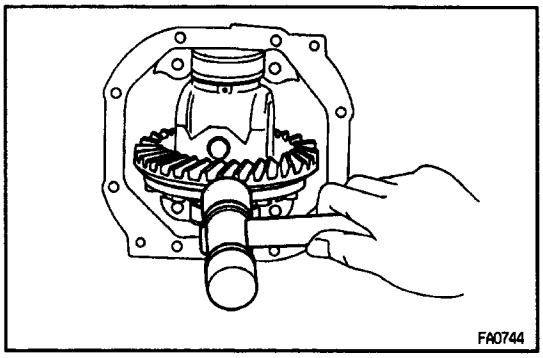

(i) Tap on the ring gear with a plastic–faced hammer so that the washer fit to the bearing.

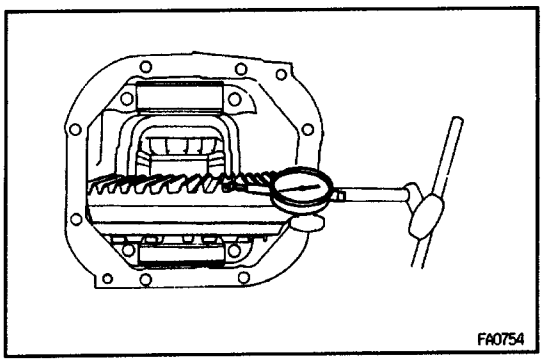

(j) Using a dial indicator, measure the ring gear backlash.
Backlash:
0.13 – 0.18 mm (0.0051 – 0.0071 in.)

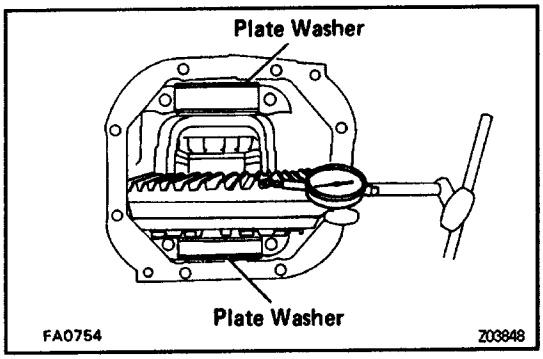

(k) If the backlash is not within specification, adjust by either increasing or decreasing the number of washers on both sides by an equal amount.
HINT: There should be no clearance between the plate washer and case.
Ensure that there is ring gear backlash.

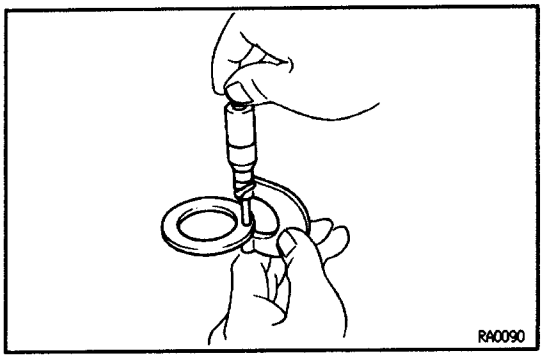

11. ADJUST SIDE BEARING PRELOAD
(a) Remove the ring gear teeth side plate washer and using a micrometer, measure the thickness.

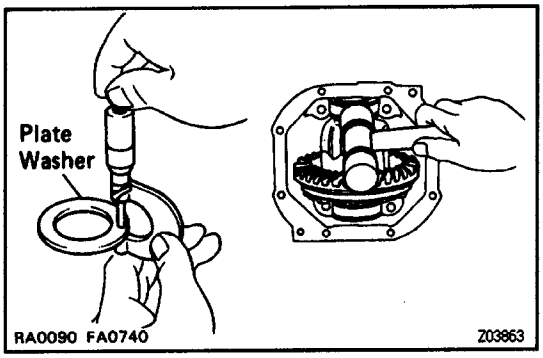

(b) Using the backlash as a reference, install a new washer of 0.06 – 0.09 mm (0.0024 – 0.0035 in.) thicker than the washer removed.
HINT: Select a washer which can be pressed in 2/3 of the way with your finger.
(c) Using a plastic – faced hammer, tap in the plate washer.

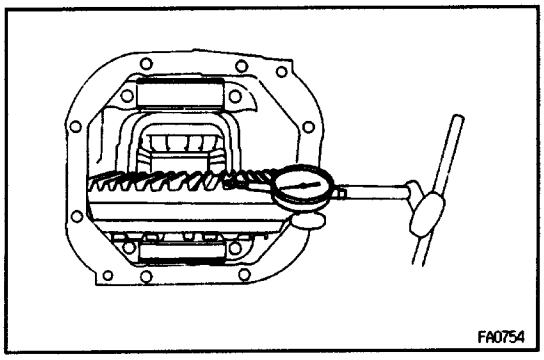

(d) Recheck the ring gear backlash.
Backlash:
0.13 – 0.18 mm (0.0051 – 0.0071 in.)

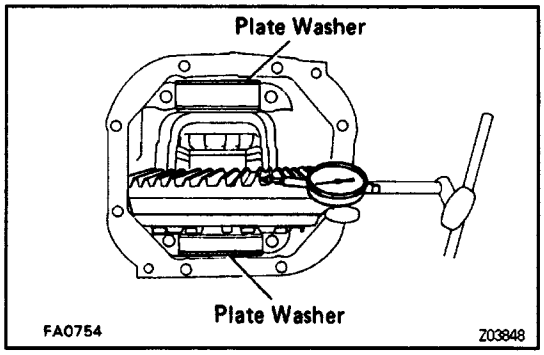

(e) If not within specification, adjust by either increasing or decreasing the washers on both sides by an equal amount.

HINT: The backlash will change about 0.02 mm (0.0008 in.) with every 0.03 mm (0.0012 in.) alteration of the plate washer.

Washer thickness

Thickness mm (in.)	Thickness mm (in.)
2.57–2.59 (0.1012–0.1020)	2.93–2.95 (0.1154–0.1161)
2.60–2.62 (0.1024–0.1031)	2.96–2.98 (0.1165–0.1173)
2.63–2.65 (0.1035–0.1043)	2.99–3.01 (0.1177–0.1185)
2.66–2.68 (0.1047–0.1055)	3.02–3.04 (0.1189–0.1197)
2.69–2.71 (0.1059–0.1067)	3.05–3.07 (0.1201–0.1209)
2.72–2.74 (0.1071–0.1079)	3.08–3.10 (0.1213–0.1220)
2.75–2.77 (0.1083–0.1091)	3.11–3.13 (0.1224–0.1232)
2.78–2.80 (0.1094–0.1102)	3.14–3.16 (0.1236–0.1244)
2.81–2.83 (0.1106–0.1114)	3.17–3.19 (0.1248–0.1256)
2.84–2.86 (0.1118–0.1126)	3.20–3.22 (0.1260–0.1268)
2.87–2.89 (0.1130–0.1138)	3.23–3.25 (0.1272–0.1280)
2.90–2.92 (0.1142–0.1150)	

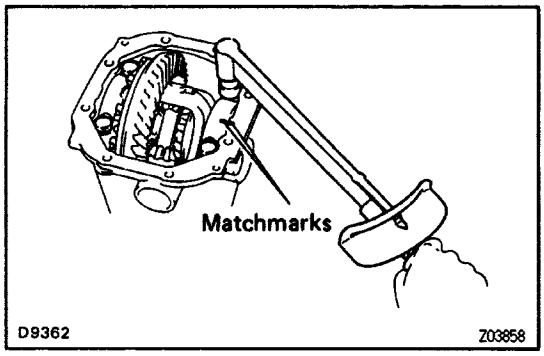

12. INSTALL BEARING CAPS

Align the matchmarks on the cap and carrier.

Torque: 78 N–m (800 kgf–cm, 58 ft–lbf)

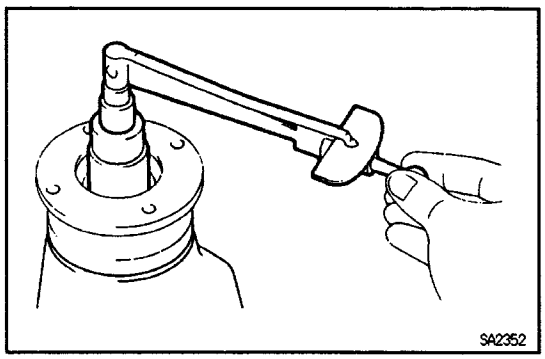

13. MEASURE TOTAL PRELOAD

Using a torque wrench, measure the total preload.

Total preload (at starting):

Add drive pinion preload

0.4 – 0.6 N–m (4 – 6 kgf–cm, 3.5 – 5.2 in.–lbf)

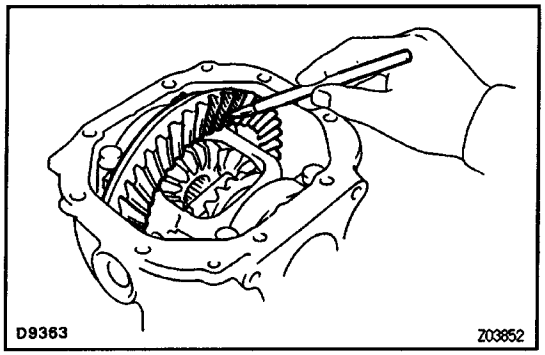

14. INSPECT TOOTH CONTACT BETWEEN RING GEAR AND DRIVE PINION

(a) Coat 3 or 4 teeth at 3 different positions on the ring gear with red lead.

(b) Hold the companion flange firmly and rotate the ring gear in both directions.

(c) Inspect the tooth pattern.

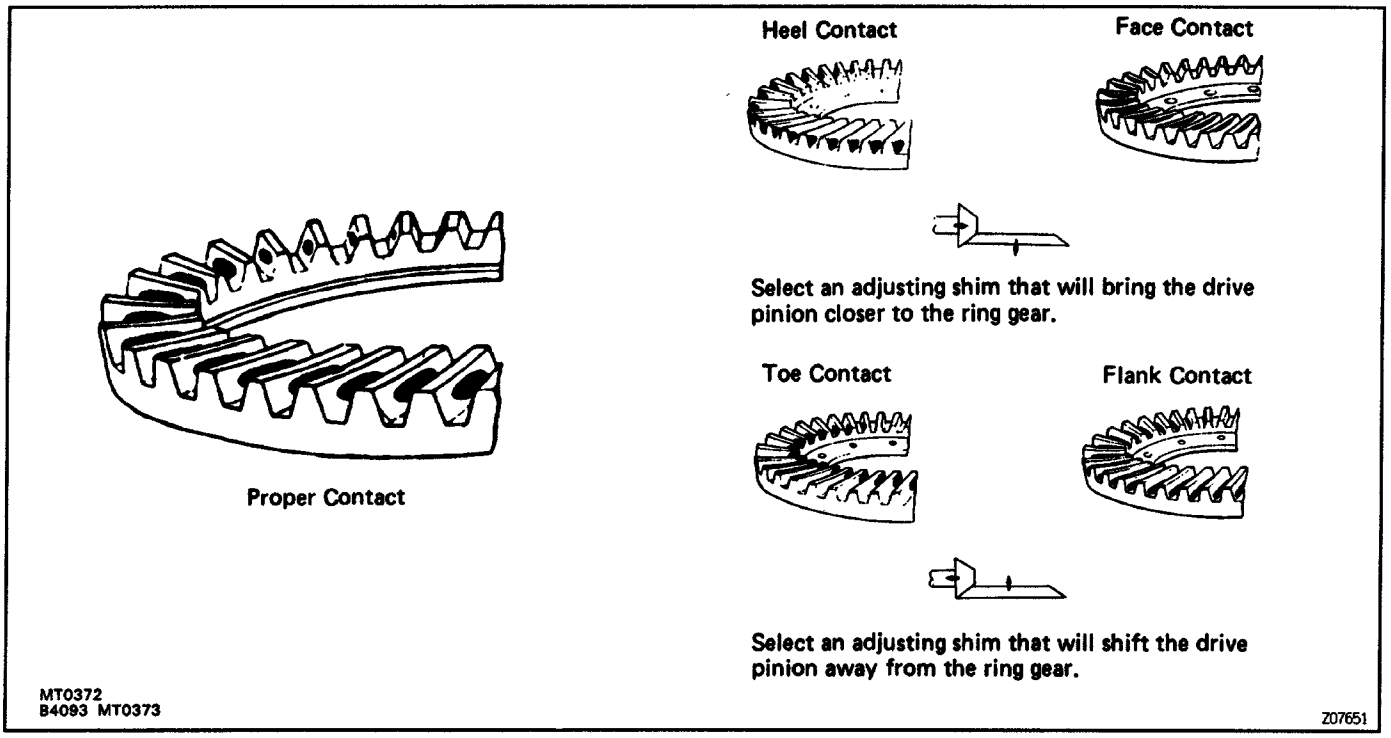

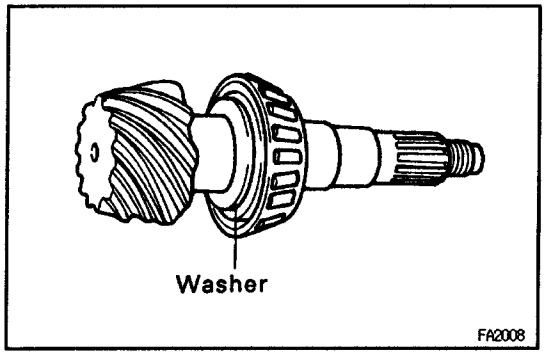

If the teeth are not contacting properly, use the following chart to select a proper washer for correction.

Washer thickness

Thickness mm (in.)	Thickness mm (in.)
2.24 (0.0882)	**2.51 (0.0988)**
2.27 (0.0894)	**2.54 (0.1000)**
2.30 (0.0906)	**2.57 (0.1012)**
2.33 (0.0917)	**2.60 (0.1024)**
2.36 (0.0929)	**2.63 (0.1035)**
2.39 (0.0941)	**2.66 (0.1047)**
2.42 (0.0953)	**2.69 (0.1059)**
2.45 (0.0965)	**2.72 (0.1071)**
2.48 (0.0976)	

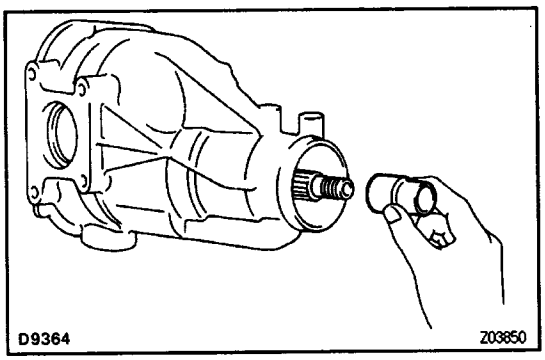

15. INSTALL BEARING SPACER

(a) Remove the companion flange.
(See page SA–87)
(b) Remove the oil slinger and rear bearing.
(See page SA–88)
(c) Install a new bearing spacer.
(d) Install the rear bearing and oil slinger.

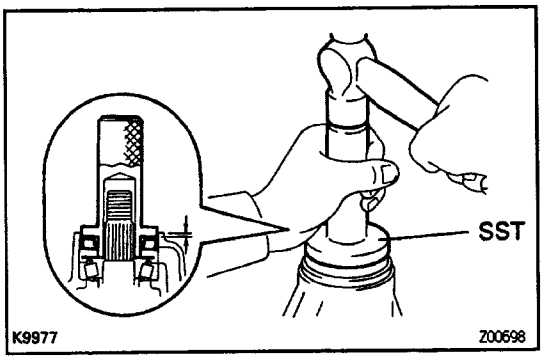

16. INSTALL OIL SEAL

(a) Using SST and a hammer, tap in a new oil seal.
SST 09554–30011
Oil seal drive in depth:
1.5 mm (0.059 in.)
(b) Apply MP grease to the oil seal lip.

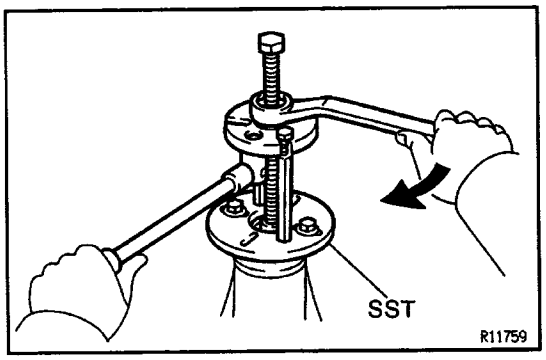

17. INSTALL COMPANION FLANGE

(a) Using SST, install the companion flange.
SST 09950–30010

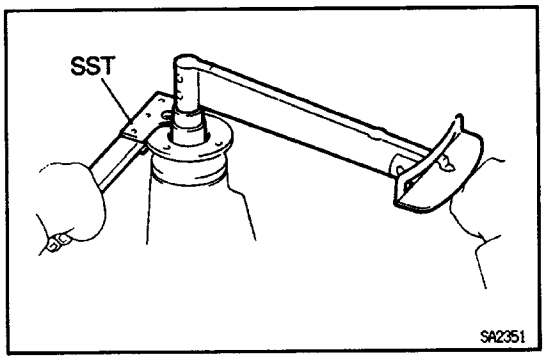

(b) Install the plate washer.
(c) Coat the threads of a new nut with MP grease and install it.
(d) Using SST to hold the flange, tighten the nut.
SST 09330–00021
Torque: 120 N–m (1,226 kgf–cm, 89 ft–lbf)

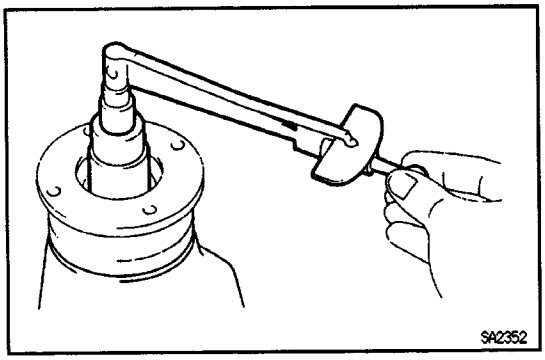

18. CHECK DRIVE PINION PRELOAD

Using a torque wrench, measure the drive pinion pre load using the backlash of the drive pinion and ring gear.
Now bearing preload (at starting):
1.2 – 1.9 N–m (12 – 19 kgf–cm, 10.4 – 16.5 in.–lbf)
Reused bearing preload (at starting):
0.6 – 1.0 N–m (6 – 10 kgf–cm, 5.2 – 8.7 in.–lbf)

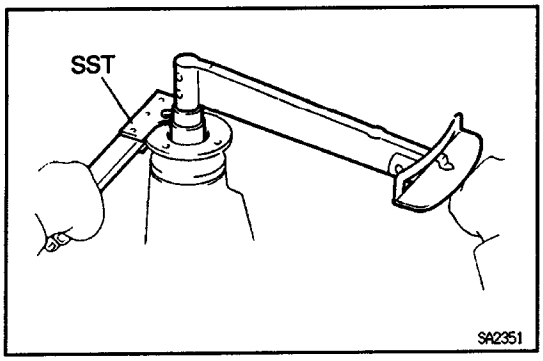

If the preload is greater than the specification, replace the spacer.
If the preload is less than the specification, retighten the nut a little at a time with a torque of 13 N–m (130 kgf–cm, 9 ft–lbf) until the specified preload is reached.

Maximum torque:

223 N–m (2,275 kgf–cm, 165 ft–lbf)

If the maximum torque is exceeded while retightening the nut, replace the spacer and repeat the preload procedure. Do not back off the nut to reduce the preload.

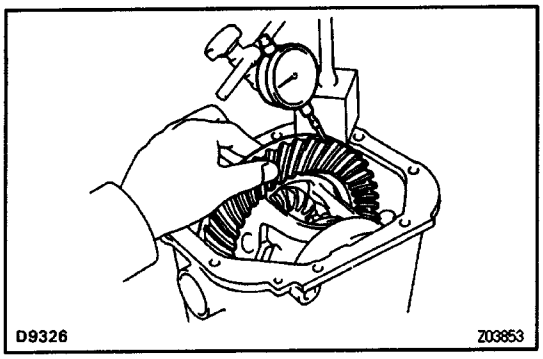

19. RECHECK RING GEAR BACKLASH

(See page SA–87)

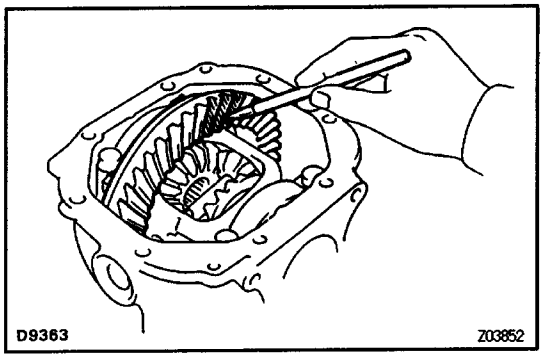

20. RECHECK TOOTH CONTACT BETWEEN RING GEAR AND DRIVE PINION

(See page SA–99)

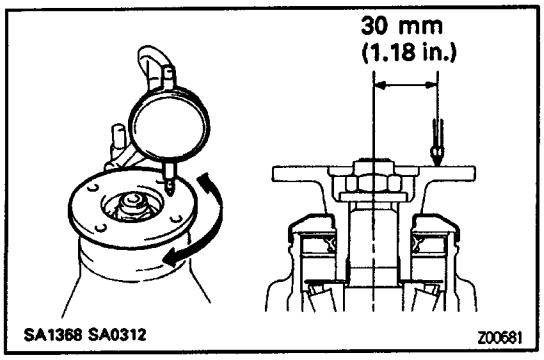

21. CHECK RUNOUT OF COMPANION FLANGE

Using a dial indicator, measure the vertical and lateral runout of the companion flange.

Maximum vertical runout:

0.10 mm (0.0039 in.)

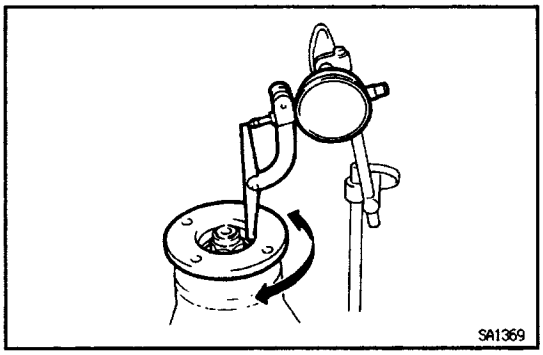

Maximum lateral runout:

0.10 mm (0.0039 in.)

If the runout is greater than the maximum, inspect the bearings.

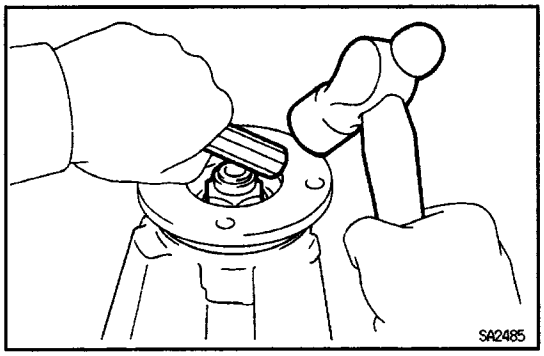

22. STAKE DRIVE PINION NUT

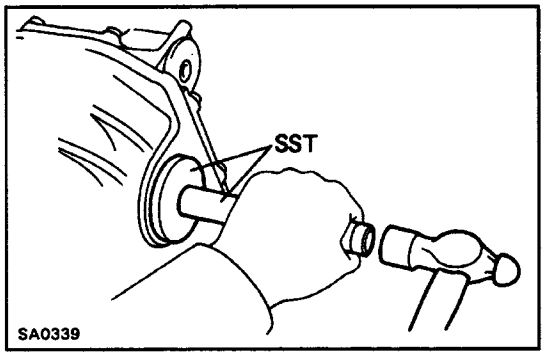

23. INSTALL SIDE GEAR SHAFT OIL SEALS

(a) Using SST and a hammer, tap in a new oil seal until its surface is flush with the differential carrier end.
SST 09550–22011 (09550–00020, 09550–00031)

(b) Apply MP grease to the oil seal lip.

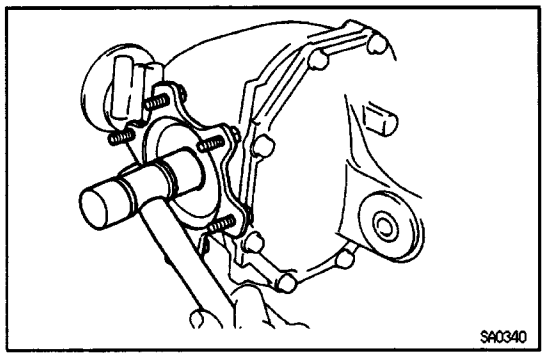

24. INSTALL RH SIDE GEAR SHAFT

(a) Install a new snap ring to the side gear shaft.

(b) Using a plastic–faced hammer, tap in the side gear shaft.

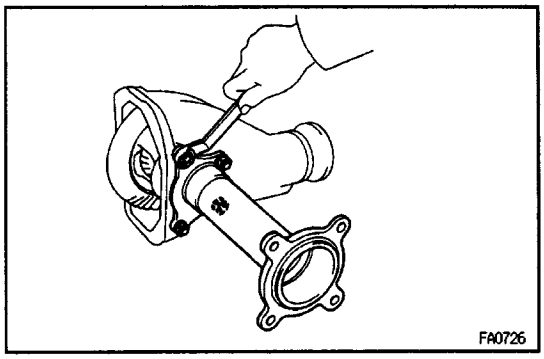

25. INSTALL DIFFERENTIAL TUBE

Install the differential tube to the differential carrier with the 4 bolts.

Torque: 88 N–m (900 kgf–cm, 65 ft–lbf)

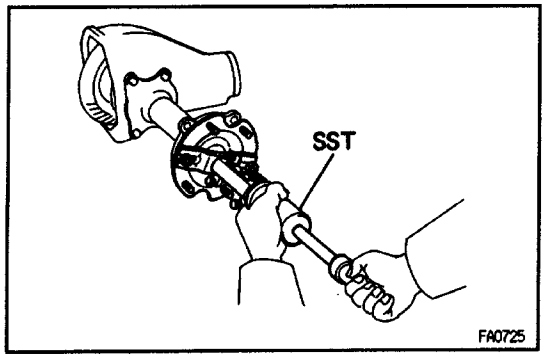

26. INSTALL LH SIDE GEAR SHAFT

(a) Install a new snap ring to the side gear shaft.

(b) Using SST, install the side gear shaft to the differential carrier.

SST 09910 – 00015 (09911 – 00011. 09912 – 00010, 09914–00011)

27. CHECK INSTALLATION OF SIDE GEAR SHAFTS

(a) Check that there is 2 – 3 mm (0.08 – 0.12 in.) of play in axial direction.

(b) Check that the side gear shafts can not be pulled out by hand.

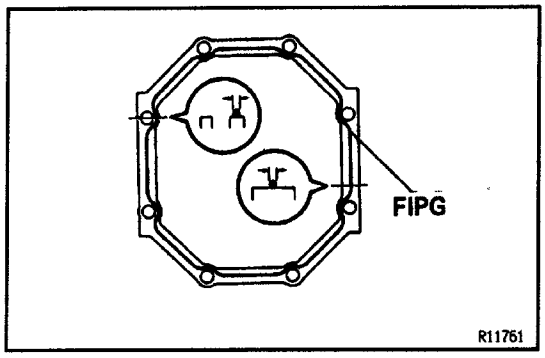

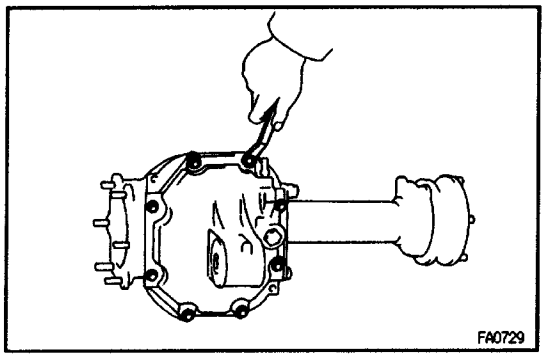

28. INSTALL DIFFERENTIAL CARRIER COVER

(a) Remove any old FIPG material and be careful not to drop oil on the contact surfaces of the differential carrier and carrier cover.

(b) Clean contacting surfaces of any residual FIPG material using gasoline or alcohol.

(c) Apply FIPG to the carrier cover, as shown.

FIPG:

Part No. 08826–00090, THREE BOND 1281 or equivalent

FIPG width approx

1–2 mm (0.04–0.08 in.)

HINT: Install the carrier cover within 10 minutes after applying FIPG.

(d) Install the differential carrier cover with the 8 bolts.

Torque: 47 N–m (475 kgf–cm, 34 ft–lbf)

DIFFERENTIAL CARRIER (w A.D.D.)

COMPONENTS

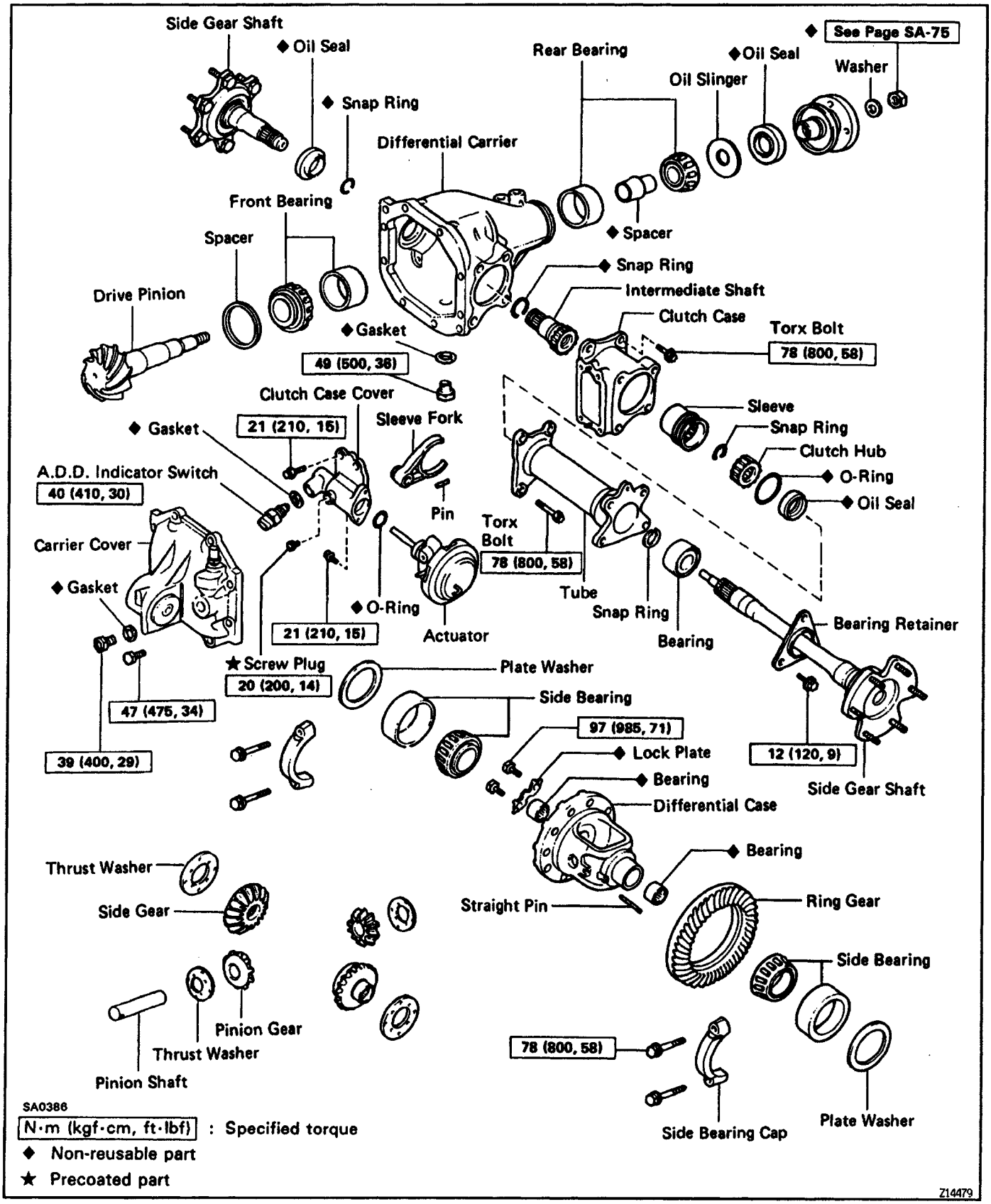

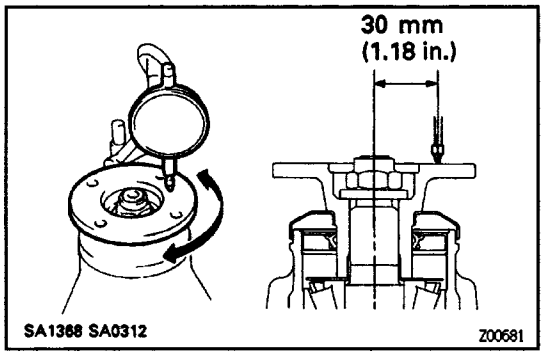

DIFFERENTIAL CARRIER INSPECTION

1. CHECK RUNOUT OF COMPANION FLANGE

Using a dial indicator, measure the vertical and lateral runout of the companion flange.

Maximum vertical runout:

0.10 mm (0.0039 in.)

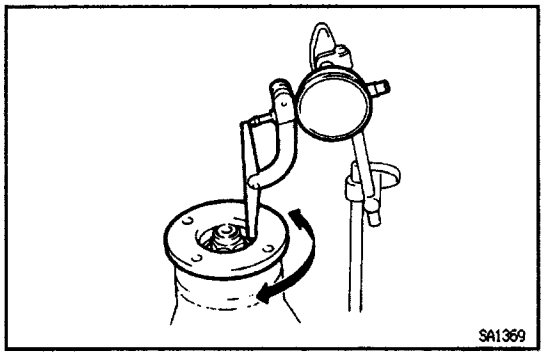

Maximum lateral runout:

0.10 mm (0.0039 in.)

If the runout is greater than the maximum, replace the companion flange.

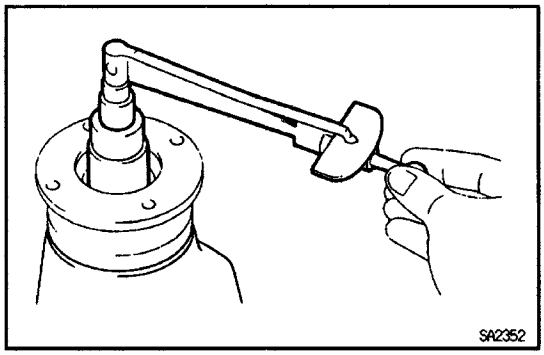

2. CHECK DRIVE PINION PRELOAD

Using a torque wrench, measure the drive pinion preload using the backlash of the drive pinion and ring gear.

Preload (at starting):

0.6 – 1.0 N–m (6 – 10 kgf–cm, 5.2 – 8.7 in.–lbf)

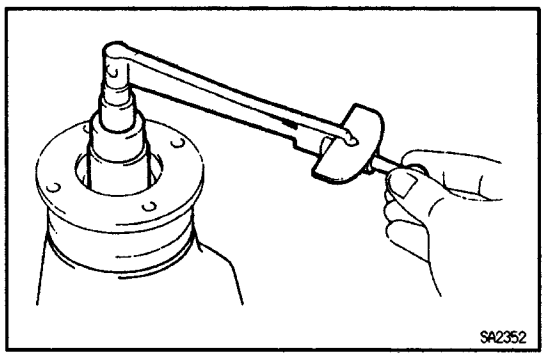

3. CHECK TOTAL PRELOAD

Using a torque wrench, measure the total preload.

Total preload (at starting):

In addition to drive pinion preload

0.4 – 0.6 N–m (4 –6 kgf–cm, 3.5 – 5.2 in.– lbf)

If necessary, disassemble and inspect the differential.

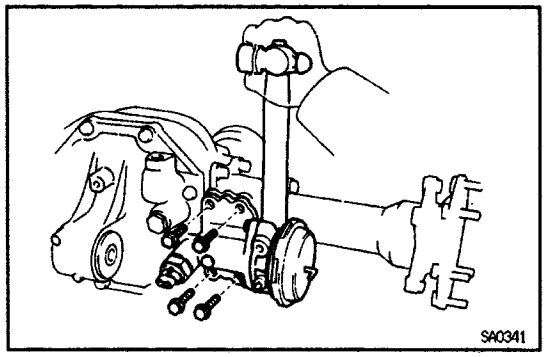

DIFFERENTIAL CARRIER DISASSEMBLY

1. REMOVE A.D.D. ACTUATOR

(a) Remove the 4 bolts.

(b) Using a hammer handle, remove the actuator.

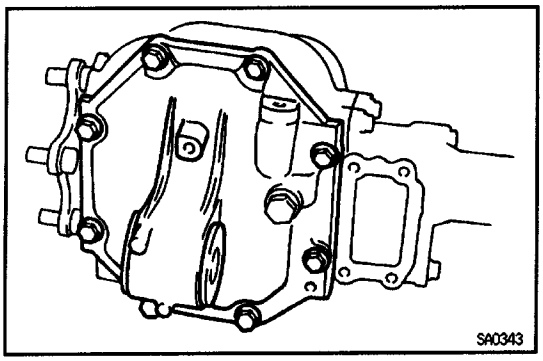

2. REMOVE DIFFERENTIAL CARRIER COVER

Remove the 8 bolts and tap out the cover with a plastic–faced hammer.

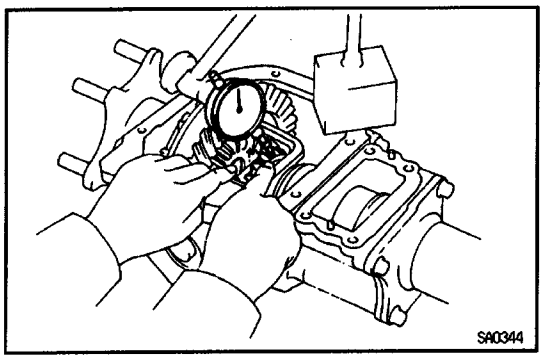

3. CHECK SIDE GEAR BACKLASH

Holding 1 pinion gear toward the case, measure the side gear backlash.

Backlash:

0.05 – 0.20 mm (0.0020 – 0.0079 In.)

If the backlash is out of specification, install the correct thrust washers. (See page SA–67)

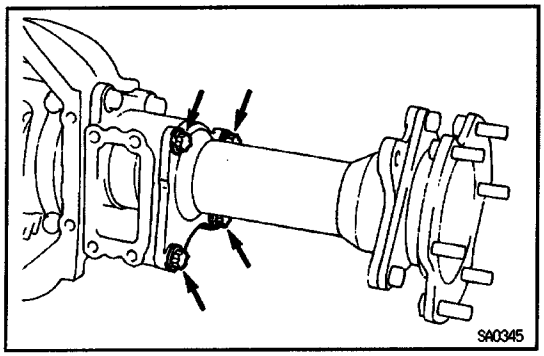

4. REMOVE LH SIDE GEAR SHAFT WITH TUBE

(a) Remove the 4 torx bolts.

Torx socket E14 (Part No.09044–00010 or locally manufactured tool)

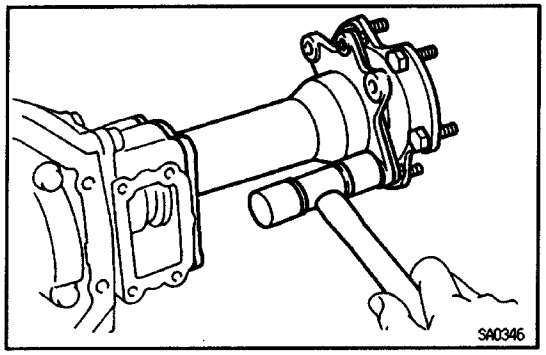

(b) Using a plastic–faced hammer, tap on the tube to remove it.

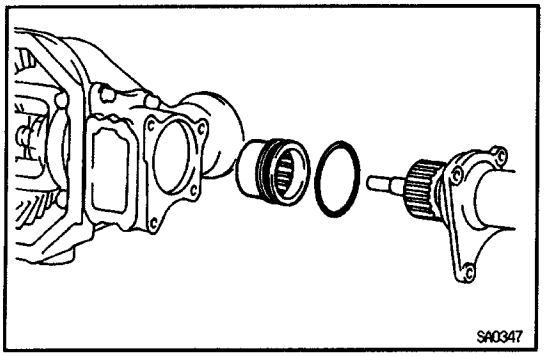

(c) Remove the sleeve.

(d) Remove the O–ring from the tube.

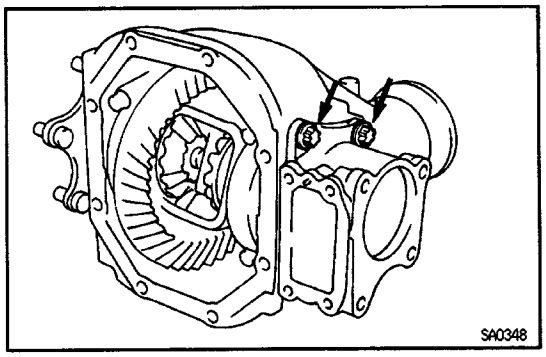

5. REMOVE CLUTCH CASE

(a) Remove the 2 torx bolts.

Torx socket E14 (Part No.09044–00010 or locally manufactured tool)

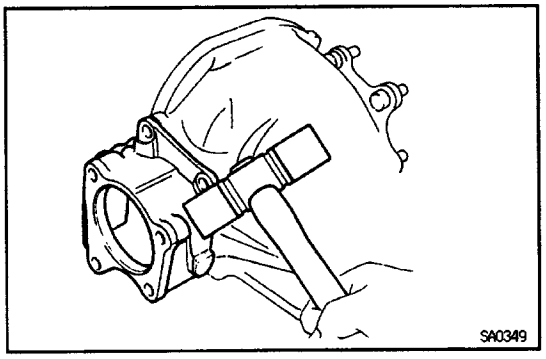

(b) Using a plastic–faced hammer, tap on the clutch case to remove it.

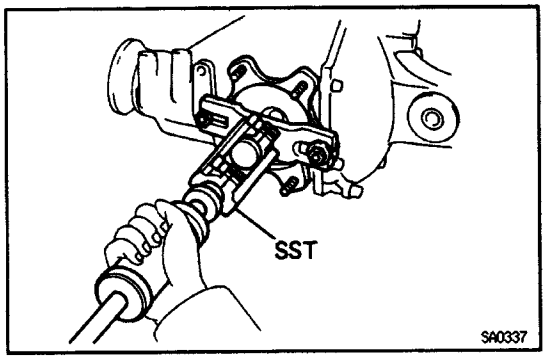

6. REMOVE RH SIDE GEAR SHAFT

Using SST, remove the side gear shaft.
SST 09910 – 00015 (09911 – 00011, 09912 – 00010, 09914–00011)

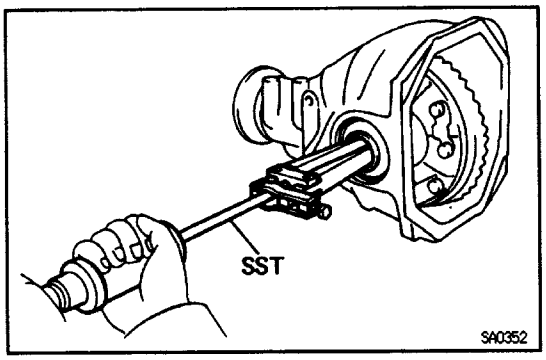

7. REMOVE RH SIDE GEAR SHAFT OIL SEAL

Using SST, remove the right side gear shaft oil seal.
SST 09308 – 00010

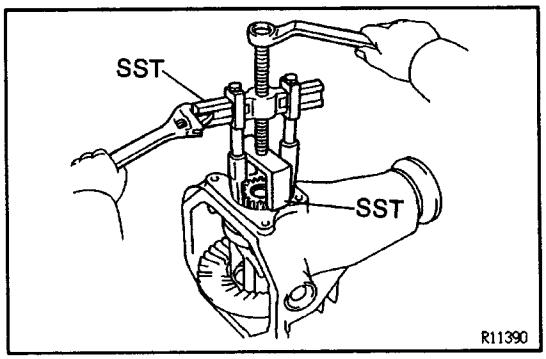

8. REMOVE INTERMEDIATE SHAFT

Using SST, pull off the intermediate shaft.
SST 09350 – 20015 (09369 – 20040), 09950–40010

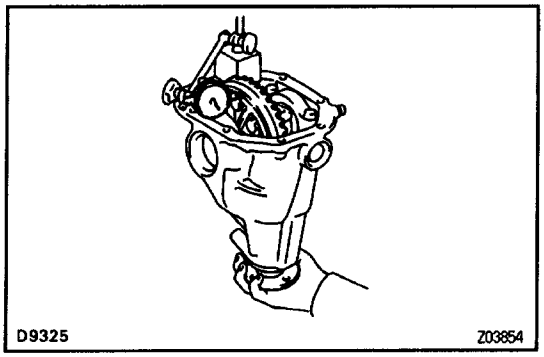

9. CHECK RING GEAR RUNOUT

Using a dial indicator, measure the ring gear runout.

Maximum runout:

0.07 mm (0.0028 in.)

If the runout is greater than the maximum, replace the ring gear and drive pinion as a set.

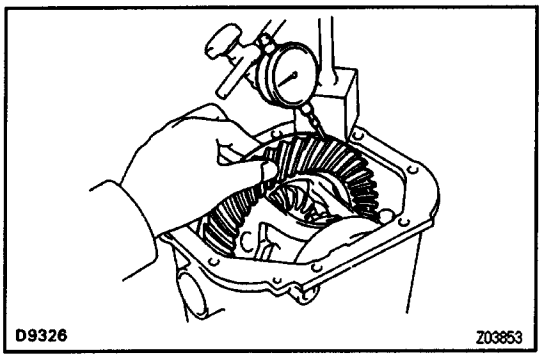

10. CHECK RING GEAR BACKLASH

(a) Fix the dial indicator on the tooth surface at a 90° angle.

(b) Holding the drive pinion flange, measure the ring gear backlash.

Backlash:

0.13 – 0.18 mm (0.0051 – 0.0071 in.)

If the backlash is not within specification, adjust the ring gear backlash.

HINT: Measure from 3 or more places on the circumference of the ring gear.

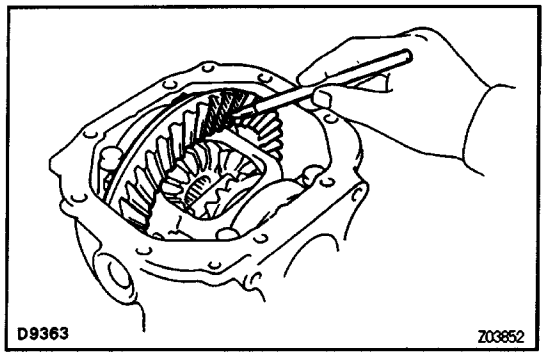

11. INSPECT TOOTH CONTACT BETWEEN RING GEAR AND DRIVE PINION

(See page SA–74)

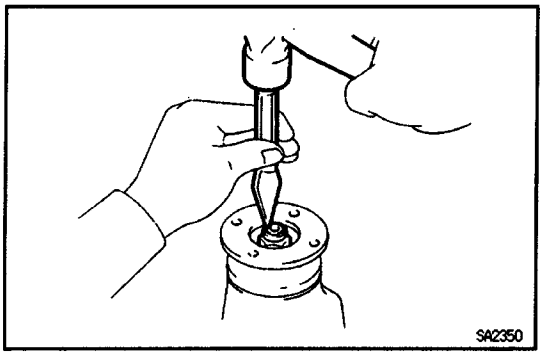

12. REMOVE COMPANION FLANGE

(a) Using a chisel and hammer, unstake the nut.

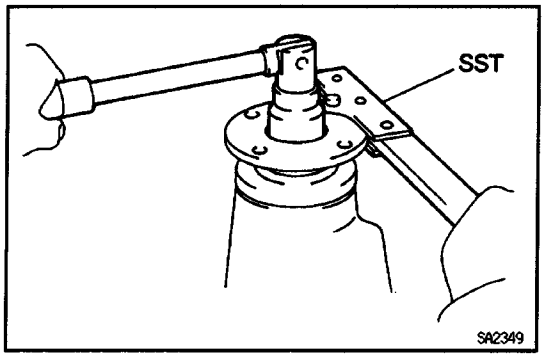

(b) Using SST to hold the flange, remove the nut and plate washer.

SST 09330–00021

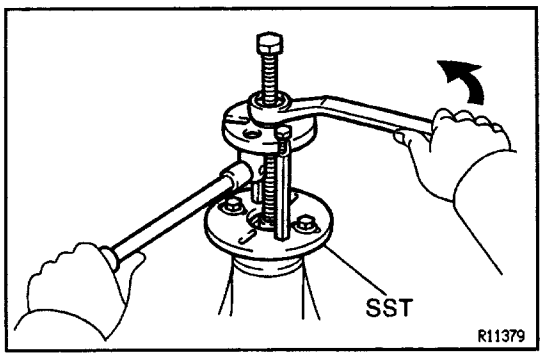

(c) Using SST, remove the companion flange.
SST 09950 – 30010

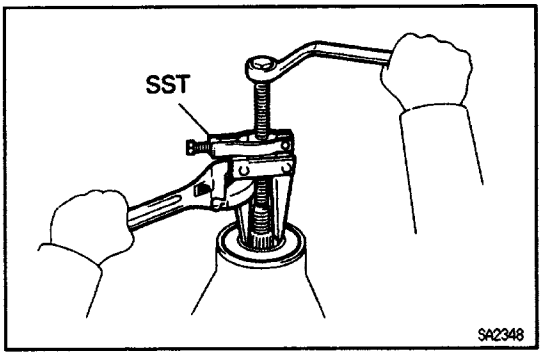

13. REMOVE OIL SEAL AND OIL SLINGER

(a) Using SST, remove the oil seal from the differential carrier.
SST 09308–10010

(b) Remove the oil slinger.

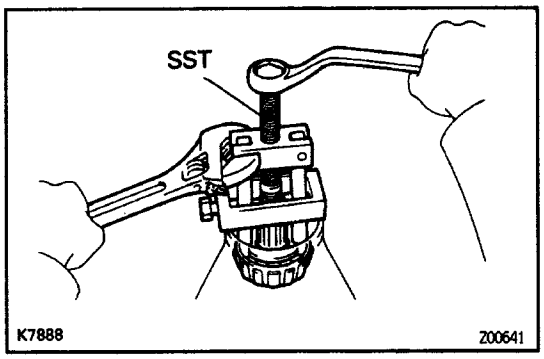

14. REMOVE REAR BEARING AND BEARING SPACER

(a) Using SST, remove the rear bearing from the drive pinion.
SST 09556–30010

(b) Remove the bearing spacer.

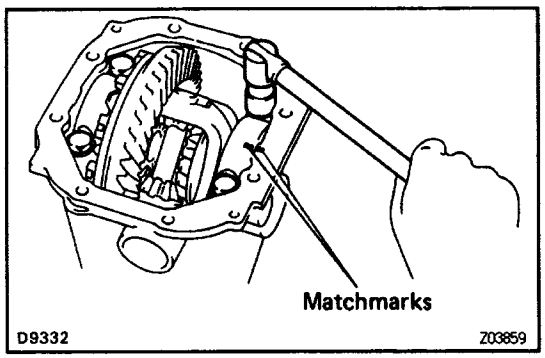

15. REMOVE DIFFERENTIAL CASE ASSEMBLY

(a) Place matchmarks on the bearing cap and differential carrier.

(b) Remove the 4 bolts and 2 bearing caps.

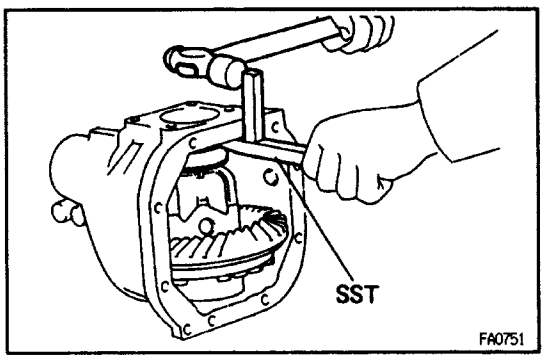

(c) Using SST, remove the 2 side bearing plate washers.
SST 09504–22011

HINT: Measure the plate washer and note the thickness.

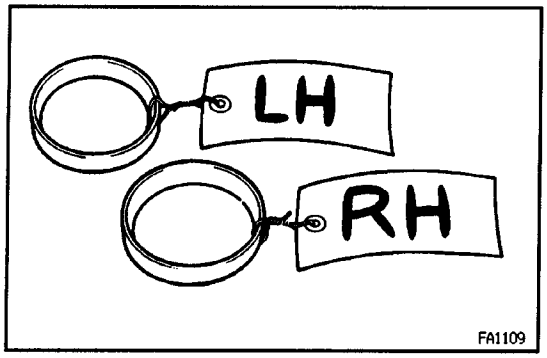

(d) Remove the differential case with the bearing outer races from the differential carrier.

HINT: Tag the bearing outer races to show the location for reassembly.

16. REMOVE DRIVE PINION FROM DIFFERENTIAL CARRIER

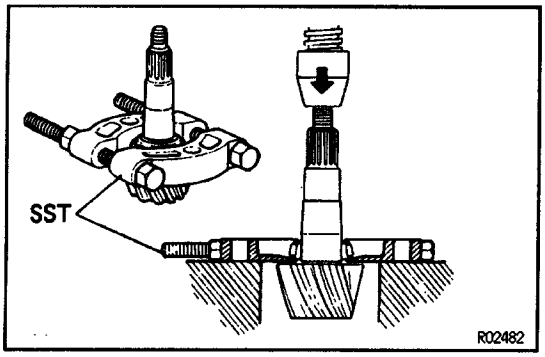

17. REMOVE DRIVE PINION FRONT BEARING

Using SST and a press, remove the bearing from the drive pinion.

SST 09950–00020

HINT: If the drive pinion or ring gear are damaged, replace them as a set.

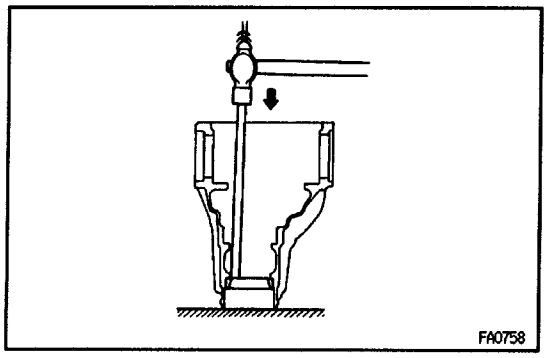

18. REMOVE DRIVE PINION BEARING OUTER RACES

Using a brass bar and hammer, drive out the outer races from the differential carrier.

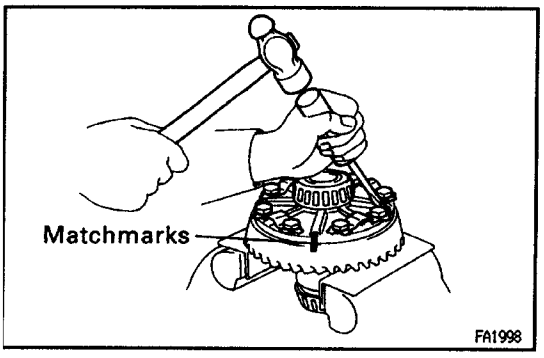

19. REMOVE RING GEAR

(a) Place matchmarks on the ring gear and differential case.

(b) Using a screwdriver and hammer, unstake the lock plates.

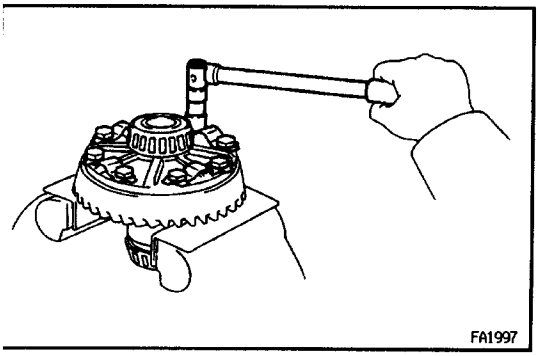

(c) Remove the 10 bolts and 5 lock plates.

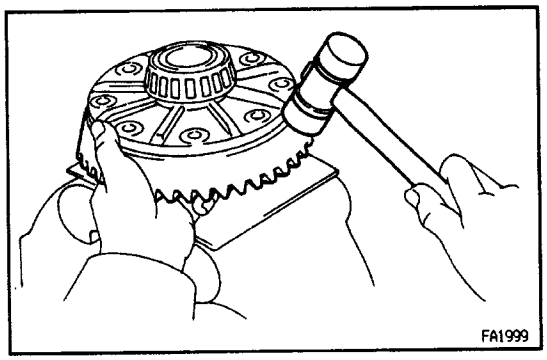

(d) Using a plastic–faced hammer, tap on the ring gear to separate it from the differential case.

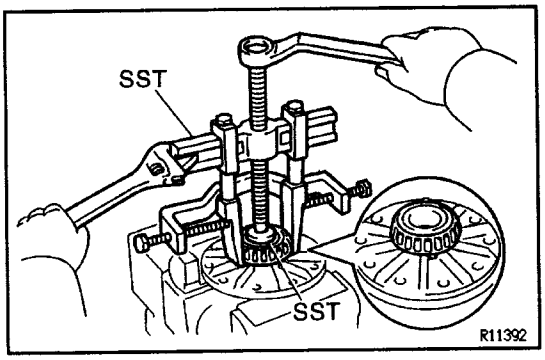

20. REMOVE SIDE BEARINGS

Using SST, remove the side bearings from the differential case.

SST 09608 – 30012(09608 – 04060),
09950–40010

HINT: Fix the claws of SST to the notch in the differential case.

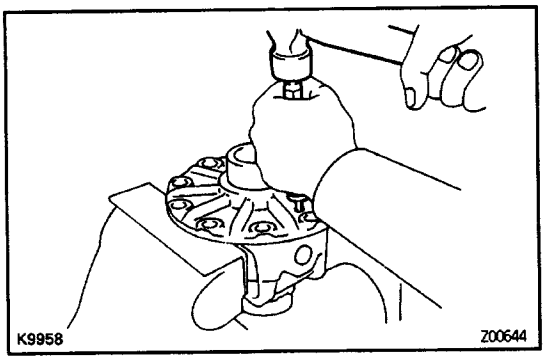

21. DISASSEMBLE DIFFERENTIAL CASE ASSEMBLY

(a) Using a pin punch and hammer, drive out the straight pin.

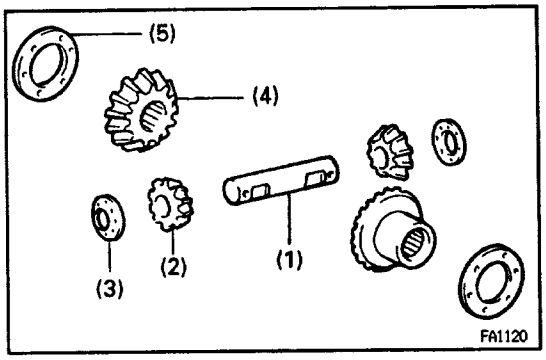

(b) Remove these parts:
(1) Pinion shaft
(2) Pinion gears
(3) Pinion gear thrust washers
(4) Side gears
(5) Side gear thrust washers

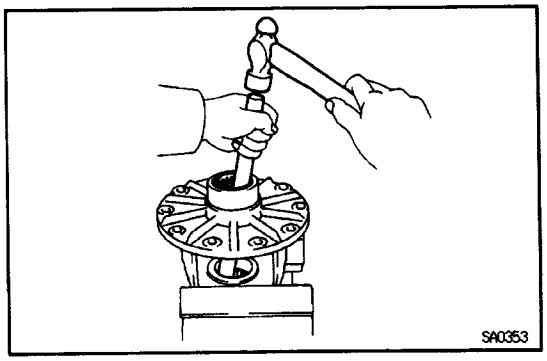

(c) Using a brass bar and hammer, drive out the needle bearings.

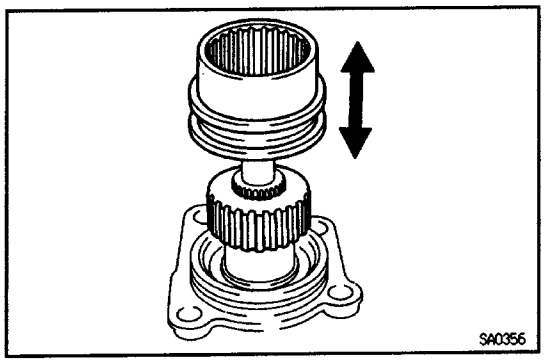

SIDE GEAR SHAFT INSPECTION AND REPLACEMENT

1. INSPECT CLUTCH HUB AND CLUTCH SLEEVE

(a) Check the wear and damage of the clutch hub and clutch sleeve.

If necessary, replace them.

(b) Check that clutch sleeve slides smoothly on the clutch hub.

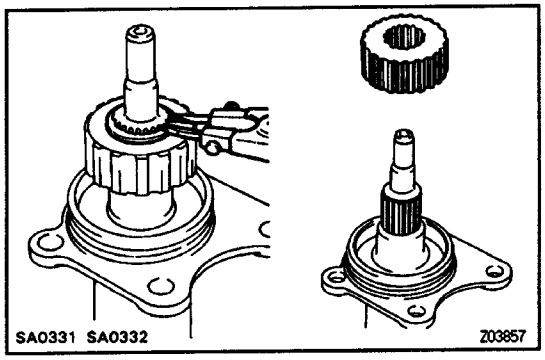

2. REMOVE CLUTCH HUB

(a) Using a snap ring expander, remove the snap ring.

(b) Remove the clutch hub from the side gear shaft.

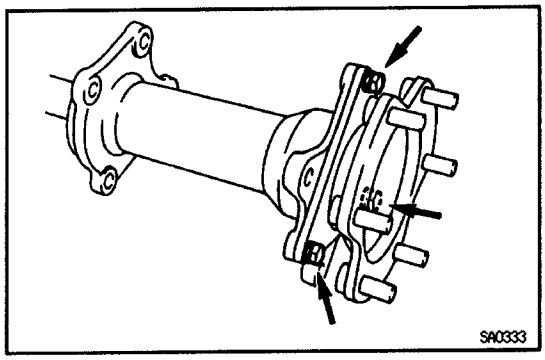

3. REMOVE SIDE GEAR SHAFT FROM TUBE

(a) Remove the 3 bearing retainer bolts.

(b) Remove the side gear shaft from the tube.

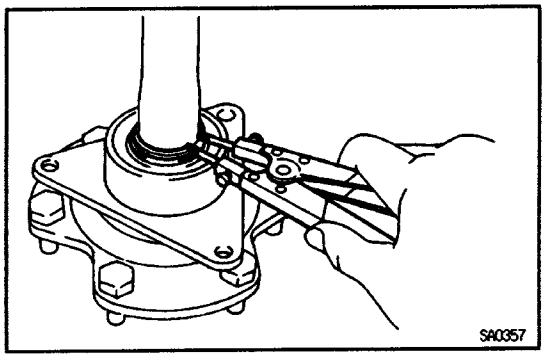

4. REPLACE SIDE GEAR SHAFT BEARING

(a) Using a snap ring expander, remove the snap ring.

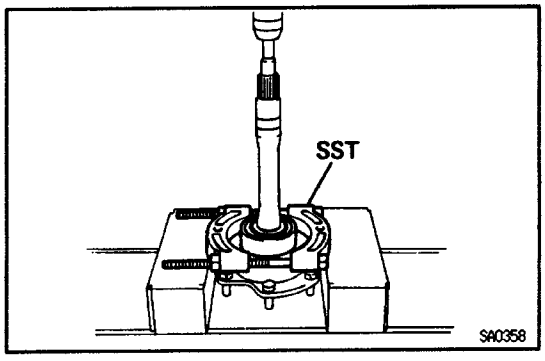

(b) Using SST and a press, remove the bearing.

SST 09950–00020

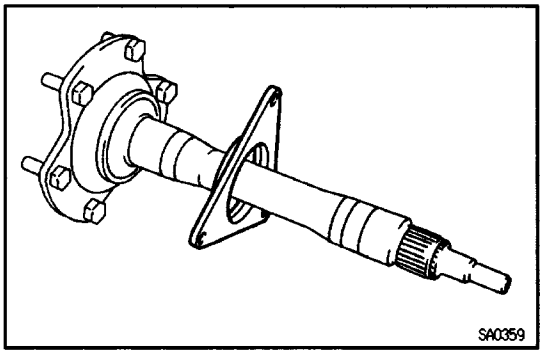

(c) Remove the bearing retainer.

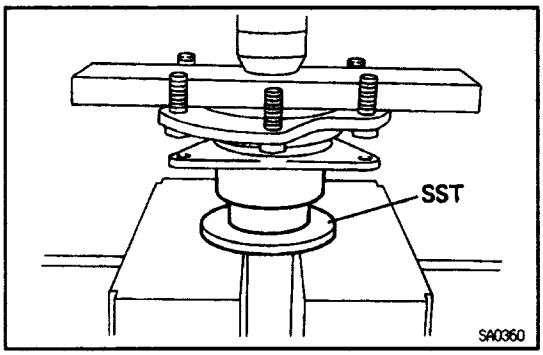

(d) Using SST and a press, install the bearing.
SST 09316–60010 (09316–00040)

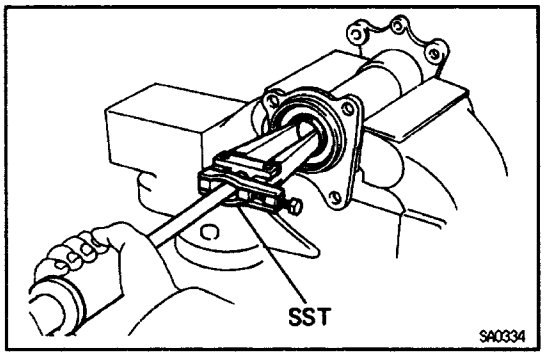

6. REPLACE SIDE OIL SEAL

(a) Using SST, remove the side oil seal.
SST 09308–00010

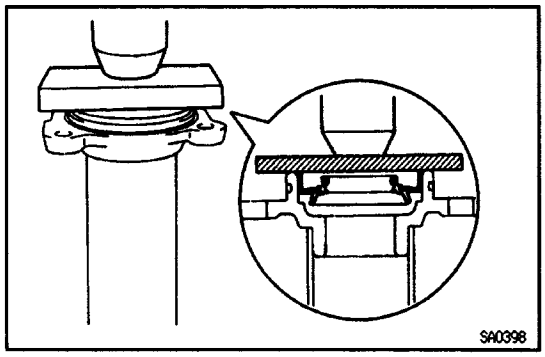

(b) With the oil seal lip facing upward, use press and plate to press in a new oil seal until its end is flush with the surface of the tube.

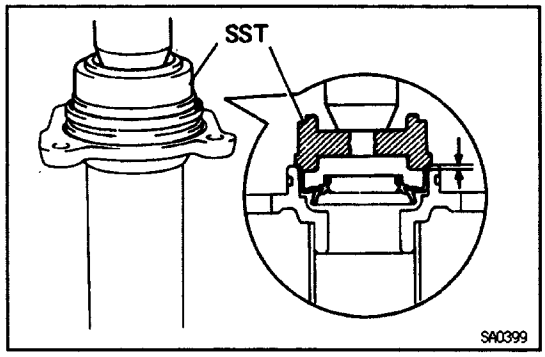

(c) Using SST, press in the oil seal.
SST 09554–14010
Oil seal press in depth:
2.5 mm (0.098 in.)

(d) Coat the lip of oil seal with MP grease.

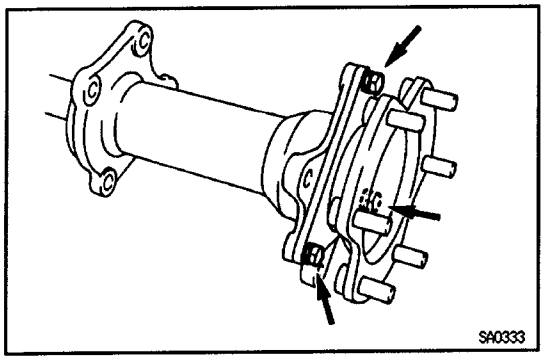

6. INSTALL SIDE GEAR SHAFT

(a) Install the side gear shaft into the tube.

(b) Torque the 3 bearing retainer bolts.

Torque: 12 N–m (120 kgf–cm, 9 ft–lbf)

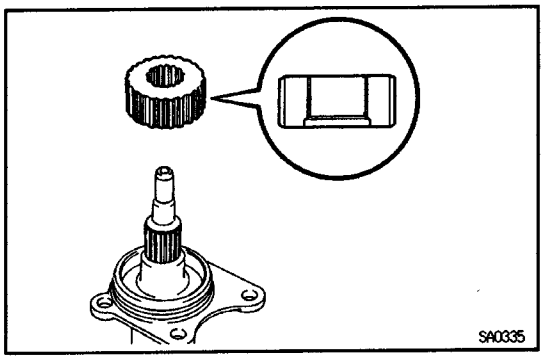

7. INSTALL CLUTCH HUB

(a) Install the clutch hub to the shaft.

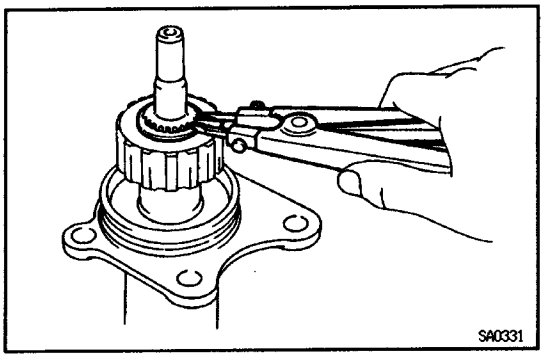

(b) Using a snap ring expander, install the snap ring.

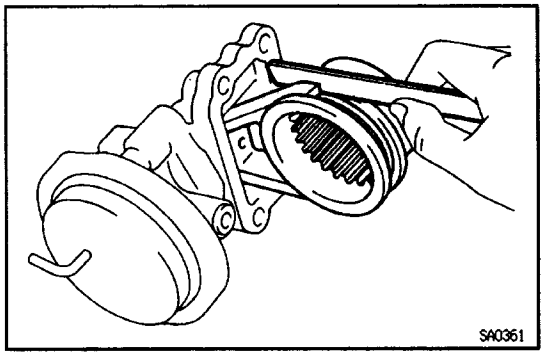

A.D.D. ACTUATOR INSPECTION AND REPLACEMENT

1. MEASURE CLEARANCE OF SLEEVE FORK AND CLUTCH SLEEVE

Using a feeler gauge, measure the clearance between the sleeve fork and clutch sleeve.

Maximum clearance:

0.35 mm (0.0138 in.)

If the clearance exceeds the maximum, replace the fork or sleeve.

2. INSPECT A.D.D. ACTUATOR

(a) Check that the sleeve fork moves to the actuator side when a vacuum of 500 mmHg (19.69 in.Hg, 66.7 kPa) is applied to port A. Also check that the vacuum remains constant.
If it dose not, replace the actuator.

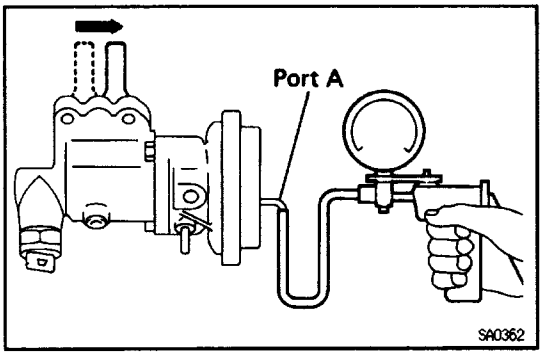

(b) Check that the sleeve fork moves away from the actuator when a vacuum of 500 mmHg (19.69 in.Hg, 66.7 kPa) is applied to port B. Also check that the vacuum remains constant.
If it dose not, replace the actuator.

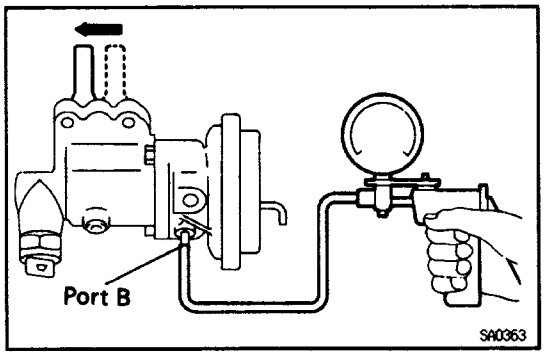

3. REMOVE A.D.D. INDICATOR SWITCH

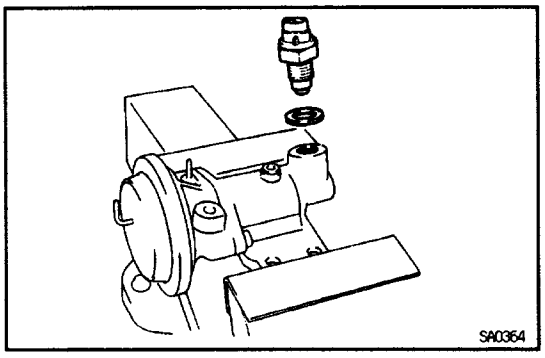

4. REMOVE SLEEVE FORK PIN

(a) Using a hexagon wrench, remove the screw plug.

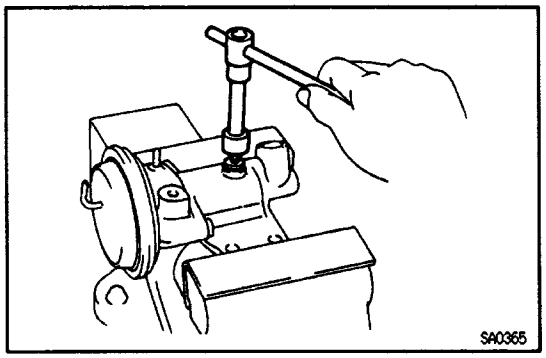

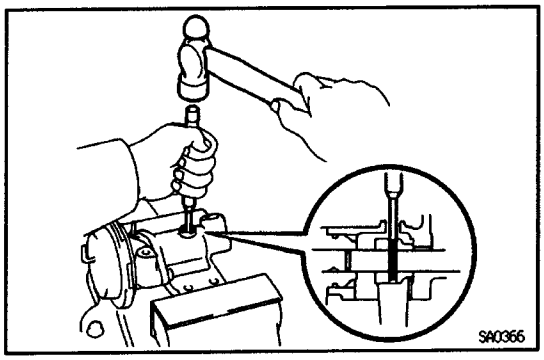

(b) Using a pin punch and hammer, drive out the pin through the hole of clutch case cover.

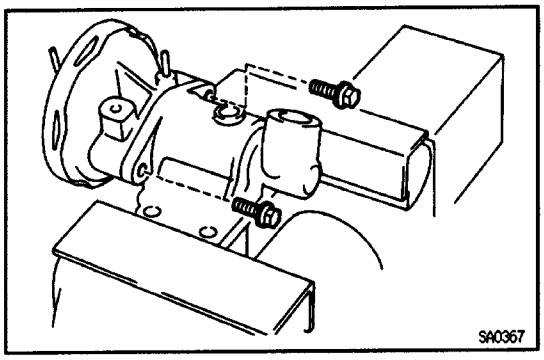

5. SEPARATE ACTUATOR FROM CLUTCH CASE COVER AND REMOVE SLEEVE FORK

(a) Remove the 2 bolts.

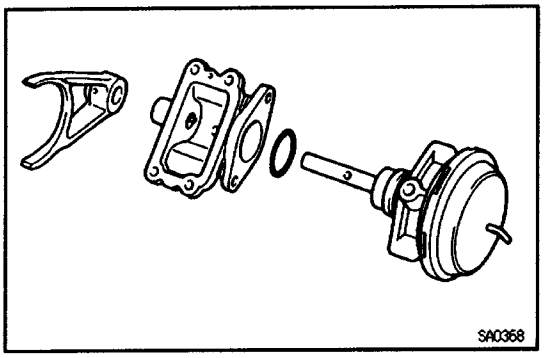

(b) Separate the actuator from clutch case cover and remove the sleeve fork.

(c) Remove the O–ring from the actuator.

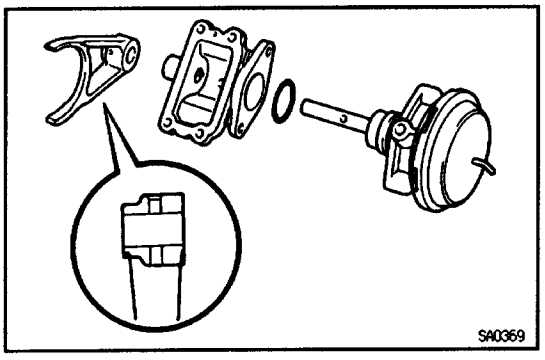

6. INSTALL SLEEVE FORK AND ACTUATOR INTO CLUTCH CASE COVER

(a) Install a new O–ring to the actuator.

(b) Coat the O–ring with MP grease.

(c) Place the sleeve fork and install the actuator to the clutch case cover.

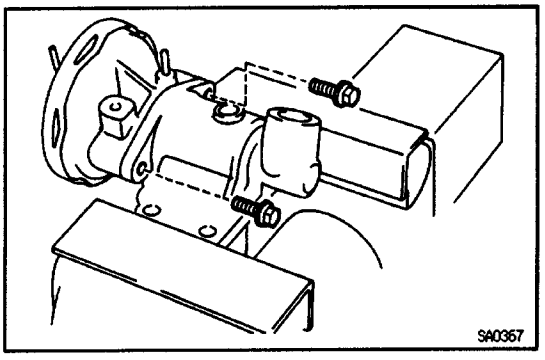

(d) Torque the 2 bolts.

Torque: 21 N–m (210 kgf–cm, 15 ft–lbf)

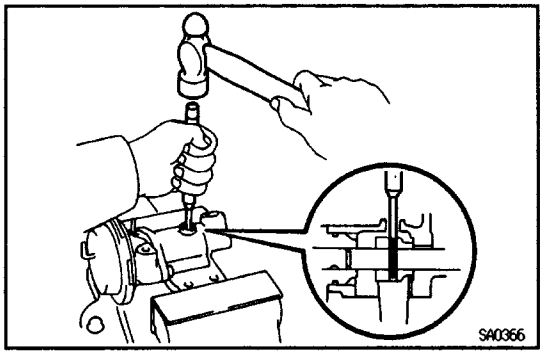

7. INSTALL SLEEVE FORK PIN

(a) Using a pin punch and hammer, drive in the pin through the hole of clutch case cover.

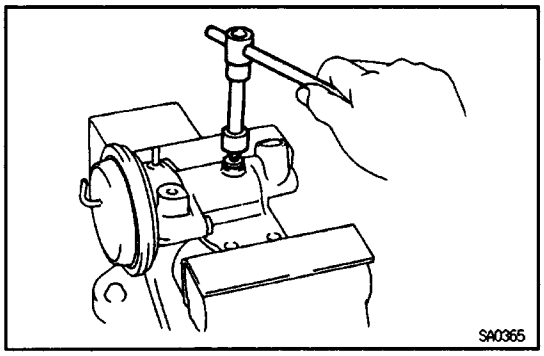

(b) Coat the threads of screw plug with FIPG.

FIPG:

Part No. 08826–00090, THREE BOND 1281 or equivalent

(c) Using a hexagon wrench, install the screw plug.

Torque: 20 N–m (200 kgf–cm, 14 ft–lbf)

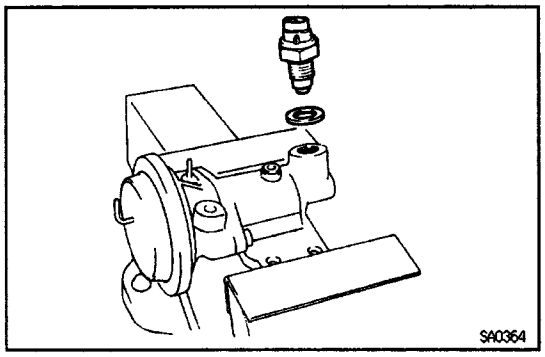

8. INSTALL A.D.D. INDICATOR SWITCH

Install a new gasket and indicator switch.

Torque: 40 N–m (410 kgf–cm, 30 ft–lbf)

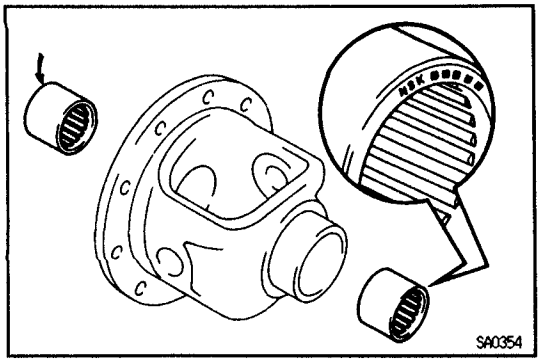

DIFFERENTIAL CARRIER ASSEMBLY

1. ASSEMBLE DIFFERENTIAL CASE

(a) Using SST and a press, press in a new needle bearing.

NOTICE: Press in the bearings, with the engraved side of each bearing facing outward from the differential case.

SST 09620–30010 (09625 –30010)

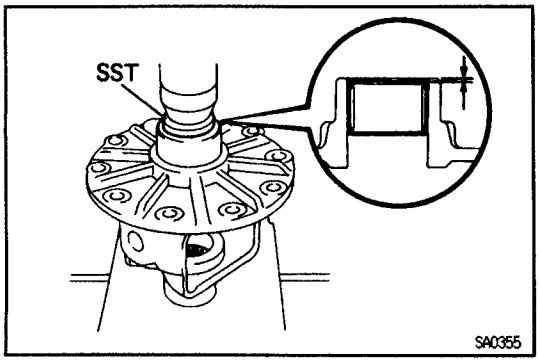

Bearing press in depth:

2.0 mm (0.079 in.)

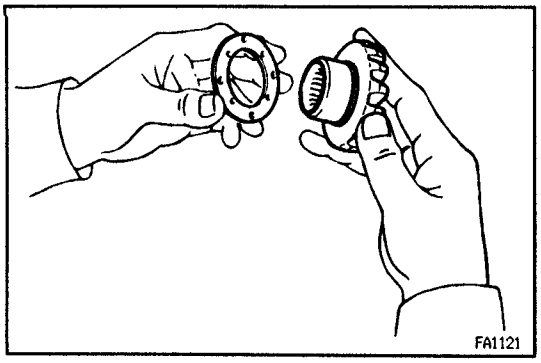

(b) Install the proper thrust washers on the side gears.

HINT: Using the table below, select thrust washers which will ensure that the backlash is within specifications.

Washer thickness

Thickness mm (in.)	Thickness mm (in.)
0.96–1.04 (0.0378–0.0409)	1.16–1.24 (0.0457–0.0488)
1.06–1.14 (0.0417–0.0449)	1.26–1.34 (0.0496–0.0528)

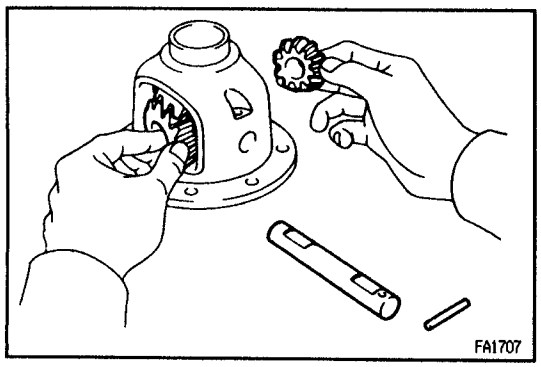

(c) Install the side gears, pinion gears, pinion gear thrust washers and pinion shaft in the differential case.

HINT: Align the holes of the differential case and pinion shaft.

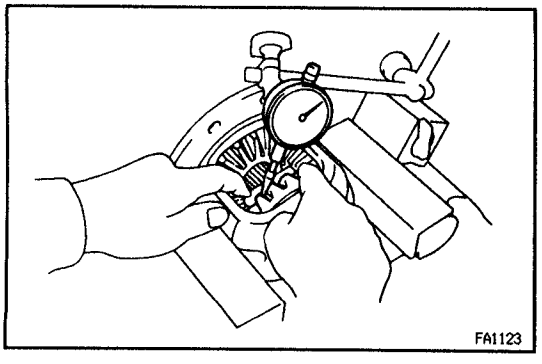

(d) Measure the side gear backlash while holding 1 pinion gear toward the differential case.

Backlash:

0.05 – 0.20 mm (0.0020 – 0.0079 in.)

If the backlash is not within the specification, install side gear thrust washers with different thicknesses.

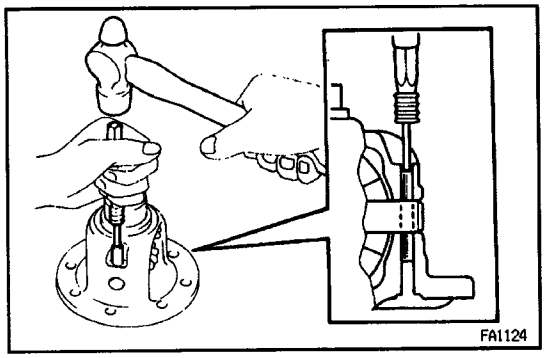

2. INSTALL STRAIGHT PIN AND STAKE DIFFERENTIAL CASE

(a) Using a pin punch and hammer, install the straight pin through the differential case and hole of the pinion shaft.

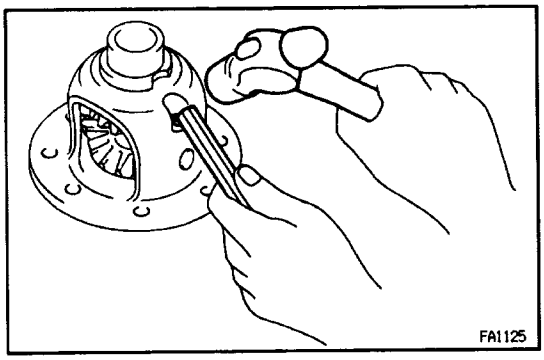

(b) Stake the differential case.

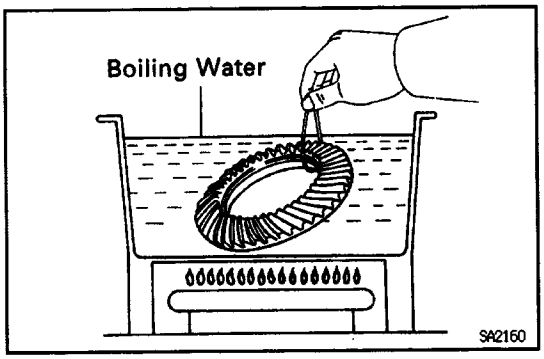

3. INSTALL RING GEAR ON DIFFERENTIAL CASE

(a) Clean the contact surfaces of the differential case and ring gear.

(b) Heat the ring gear to about 100˚C (212˚F) in boiling water.

(c) Carefully remove the ring gear from the water.

(d) After the moisture on the ring gear has completely evaporated, quickly install the ring gear to the differential case.

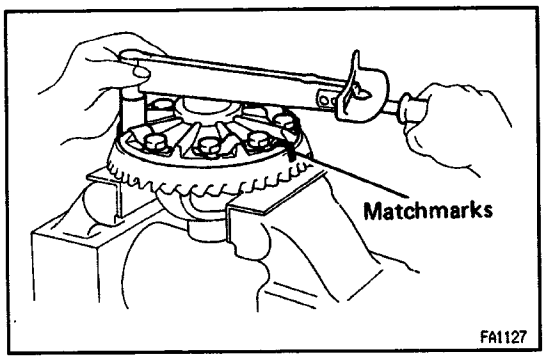

HINT: Align the matchmarks on the ring gear and differential case.

(e) Temporarily install 5 new lock plates and 10 bolts sc that the bolt holes in the ring gear and differential case are not misaligned.

(f) After the ring gear has cooled sufficiently, torque the ring gear set bolts.

Torque: 97 N–m (985 kgf–cm. 71 ft–lbf)

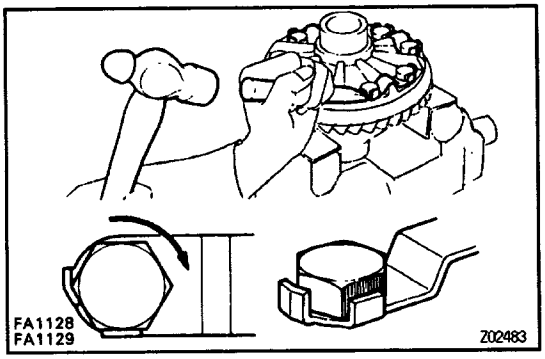

(g) Using a hammer and drift punch, stake the lock plates

HINT: Stake 1 claw flush with the flat surface of the nut. For the claw contacting the protruding portion o – the nut, stake only the half portion of the tightening side.

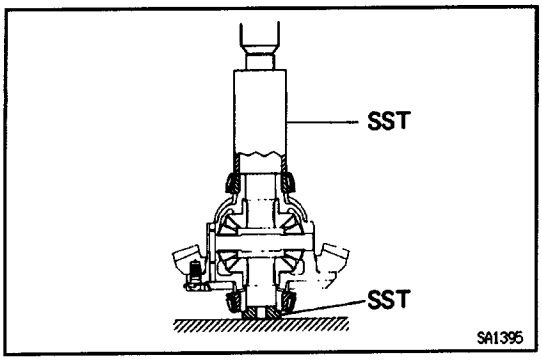

4. INSTALL SIDE BEARINGS

Using SST and a press, press the bearing into the differential case.

SST 09226–10010, 09550–10012 (09558– 10010)

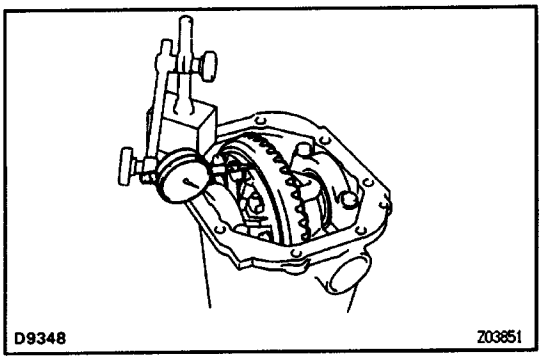

6. CHECK RING GEAR RUNOUT

(a) Install the differential case onto the carrier and install the plate washers to where there is no play in the bearing. (See page SA–70)

(b) Install bearing caps. (See page SA–73)

(c) Using a dial indicator, measure the runout of ring gear.

Maximum runout:

0.07 mm (0.0028 in.)

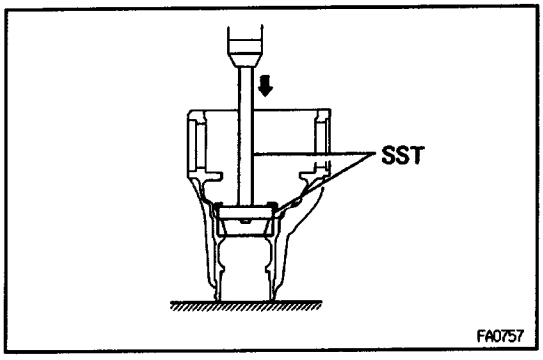

6. INSTALL DRIVE PINION FRONT AND REAR BEARING OUTER RACES

Using SST and a press, install new outer races.

Front:

SST 09608–35014 (09608–06020, 09608–06120)

Rear:

SST 09608 – 35014 (09608 – 06020, 09608 – 04110)

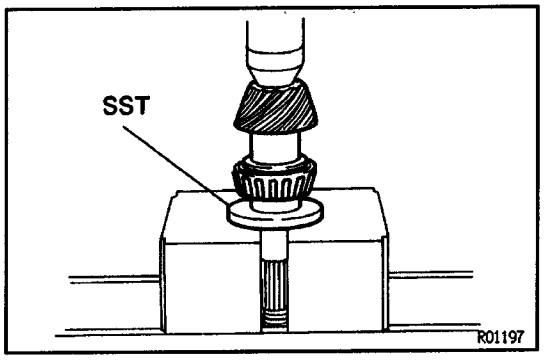

7. INSTALL DRIVE PINION FRONT BEARING

(a) Install the washer on the drive pinion.

HINT: First fit a washer with the same thickness as the washer which was removed, then after checking the tooth contact pattern, replace the washer with one of a different thickness if necessary.

(b) Using SST, press in the front bearing onto the drive pinion.

SST 09506–30012

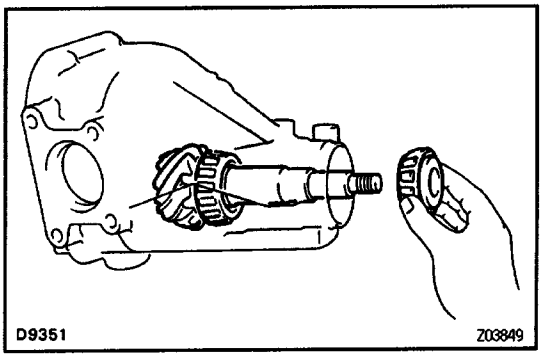

8. TEMPORARILY ADJUST DRIVE PINION PRELOAD

(a) Install the drive pinion, rear bearing and oil slinger.

HINT: Assemble the spacer and oil seal after adjusting the gear contact pattern.

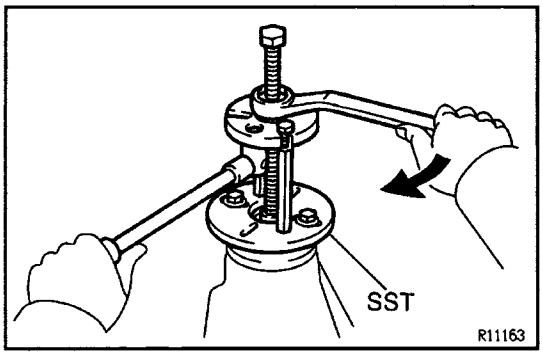

(b) Using SST, install the companion flange.
SST 09950 – 30010
(c) Coat the threads of the nut with MP grease.

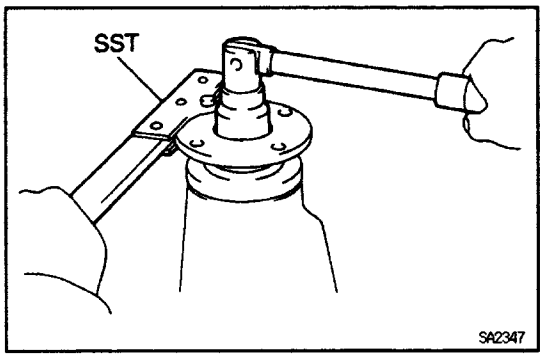

(d) Adjust the drive pinion preload by tightening the companion flange nut.
(e) Using SST to hold the flange, tighten the nut.
SST 09330 – 00021
NOTICE: As there is no spacer, tighten the nut a little at a time, being careful not to overtighten it.

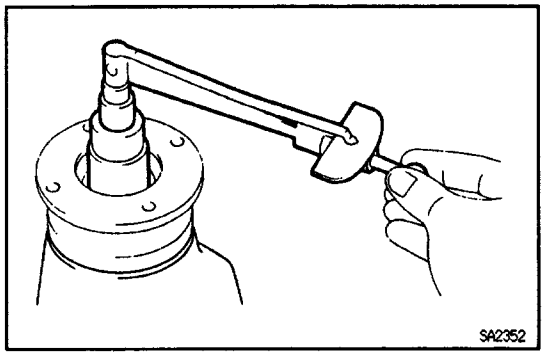

(f) Using a torque wrench, measure the preload.
New bearing preload (at starting):
1.2 – 1.9 N–m (12 – 19 kgf–cm, 10.4 – 16.5 in.–lbf)
Reused bearing preload (at starting):
0.6 – 1.0 N–m (6 – 10 kgf–cm, 5.2 – 8.7 in.–lbf)

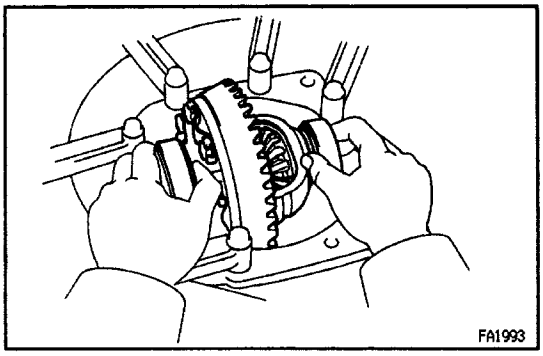

9. INSTALL DIFFERENTIAL CASE IN DIFFERENTIAL CARRIER
(a) Place the bearing outer races on their respective bearings. Check that the left and right outer races are not interchanged.
(b) Install the differential case in the differential carrier.

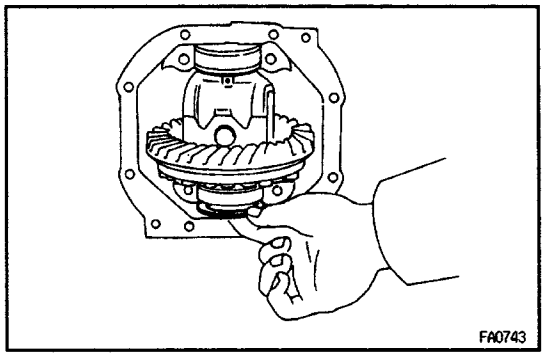

10. ADJUST RING GEAR BACKLASH
(a) Only install the plate washer on the ring gear back side.
HINT: Ensure that the ring gear has backlash.

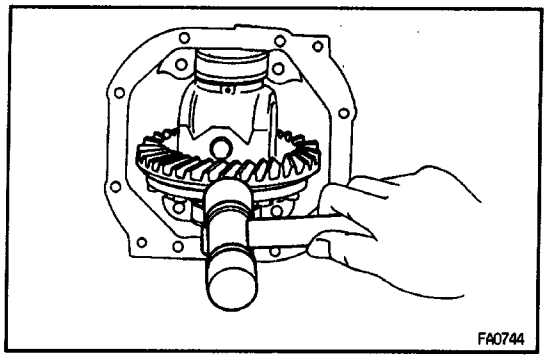

(b) Tap on the ring gear with a plastic–faced hammer so that the washer fit to bearing.

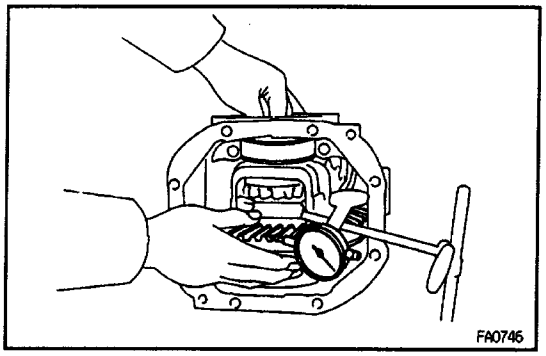

(c) Hold the side bearing boss on the teeth surface of the ring gear and measure the backlash.

Backlash (reference):
0.13 mm (0.0051 in.)

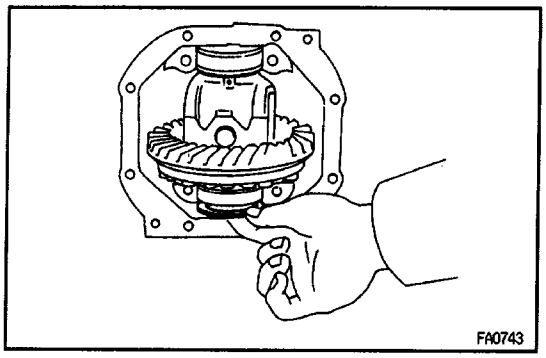

(d) Select a ring gear back side plate washer, using the backlash as reference. (See page **SA–73**)

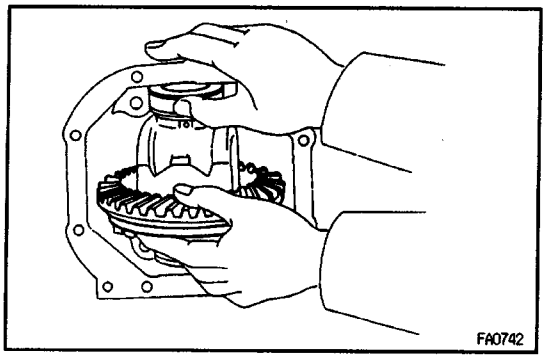

(e) Select a ring gear teeth side plate washer with a thickness which eliminates any clearance between the outer race and case.

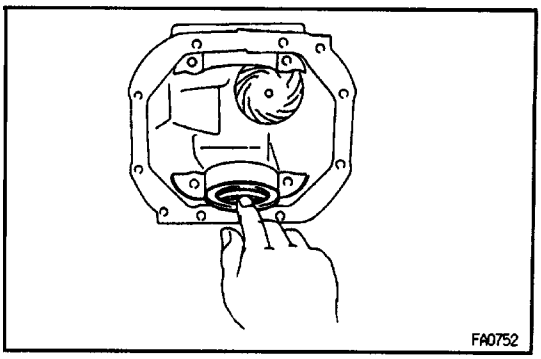

(f) Remove the plate washes and differential case.
(g) Install the plate washer into the ring gear back side of the carrier.

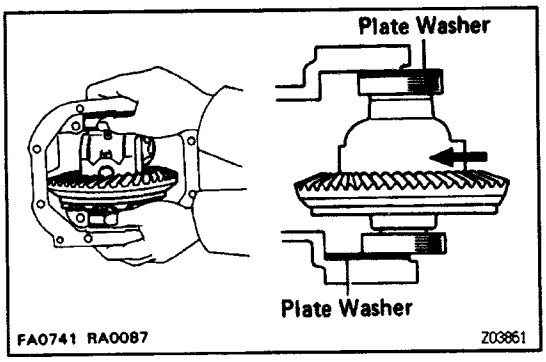

(h) Place the other plate washer onto the differential case together with the outer race, and install the differential case with the outer race into the carrier.

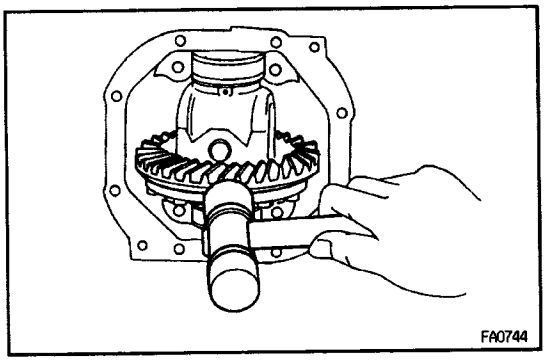

Tap on the ring gear with a plastic–faced hammer so that the washer fit to bearing.

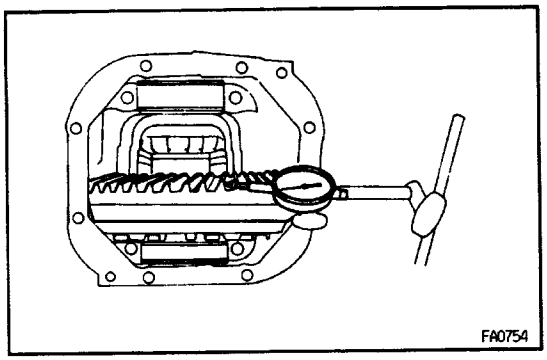

(j) Using a dial indicator, measure the ring gear backlash
Backlash:
0.13 – 0.18 mm (0.0051 – 0.0071 in.)

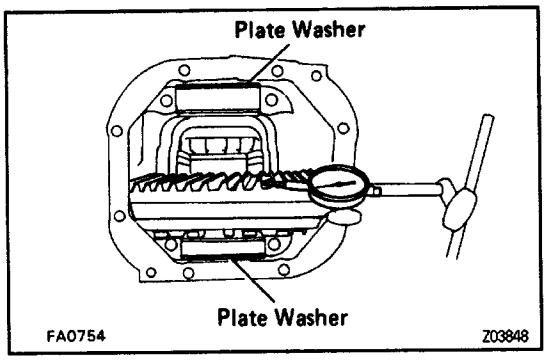

(k) If the backlash is not within specification, adjust b) either increasing or decreasing the number of washer: on both sides by an equal amount.
HINT: There should be no clearance between the plate washer and case.
Ensure that there is ring gear backlash.

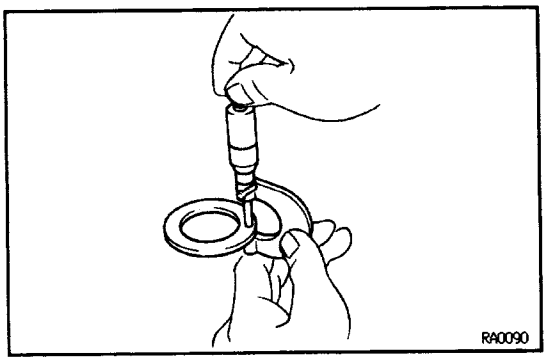

11. ADJUST SIDE BEARING PRELOAD

(a) Remove the ring gear teeth side plate washer a^ ‖ using a micrometer measure the thickness.

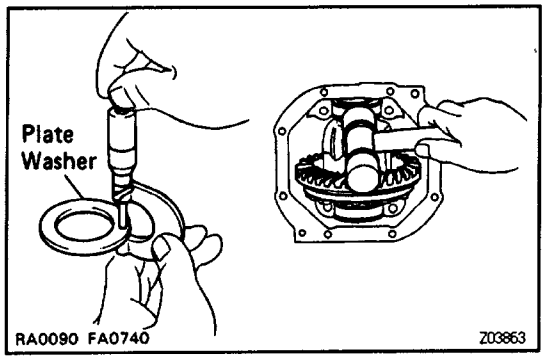

(b) Using the backlash as a reference, install a new washer of 0.06 – 0.09 mm (0.0024 – 0.0035 in.) thicker than the washer removed.

HINT: Select a washer which can be pressed in 2/3 of the way with your finger.

(c) Using a plastic – faced hammer, tap in the plate washer.

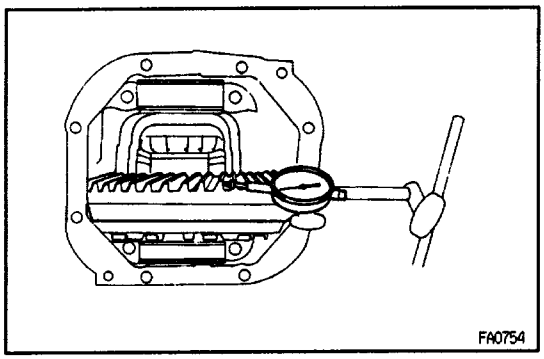

(d) Recheck the ring gear backlash.

Backlash:

0.13 – 0.18 mm (0.0051 – 0.0071 in.)

(e) If the backlash is not within specification, adjust by either increasing or decreasing the washers on both sides by an equal amount.

HINT: The backlash will change about 0.02 mm (0.0008 in.) with 0.03 mm (0.0012 in.) alteration of the plate washer.

Washer thickness

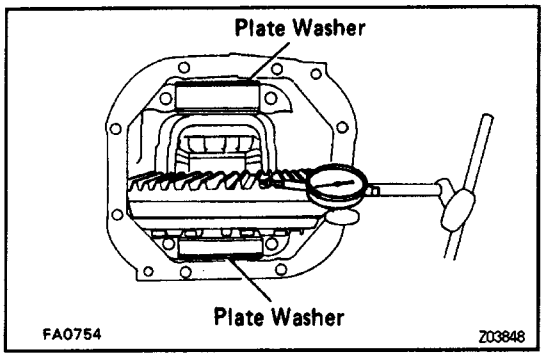

Thickness mm (in.)	Thickness mm (in.)
2.57−2.59 (0.1012−0.1020)	2.93−2.95 (0.1154−0.1161)
2.60−2.62 (0.1024−0.1031)	2.96−2.98 (0.1165−0.1173)
2.63−2.65 (0.1035−0.1043)	2.99−3.01 (0.1177−0.1185)
2.66−2.68 (0.1047−0.1055)	3.02−3.04 (0.1189−0.1197)
2.69−2.71 (0.1059−0.1067)	3.05−3.07 (0.1201−0.1209)
2.72−2.74 (0.1071−0.1079)	3.08−3.10 (0.1213−0.1220)
2.75−2.77 (0.1083−0.1091)	3.11−3.13 (0.1224−0.1232)
2.78−2.80 (0.1094−0.1102)	3.14−3.16 (0.1236−0.1244)
2.81−2.83 (0.1106−0.1114)	3.17−3.19 (0.1248−0.1256)
2.84−2.86 (0.1118−0.1126)	3.20−3.22 (0.1260−0.1268)
2.87−2.89 (0.1130−0.1138)	3.23−3.25 (0.1272−0.1280)
2.90−2.92 (0.1142−0.1150)	

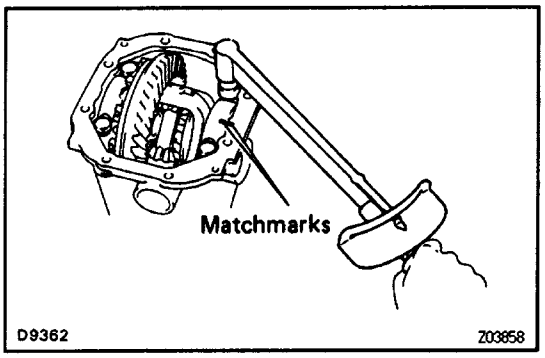

12. INSTALL BEARING CAPS

Align the matchmarks on the cap and carrier.

Torque: 78 N–n (800 kgf–cm, 58 ft–lbf)

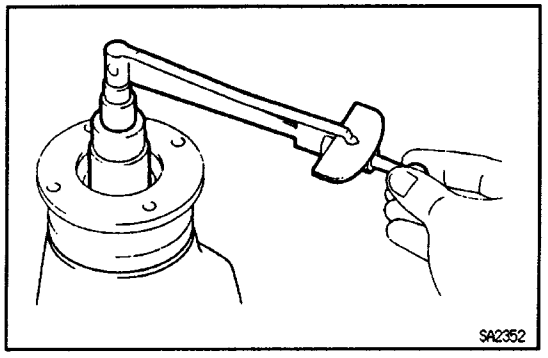

13. MEASURE TOTAL PRELOAD

Using a torque wrench, measure the total preload.

Total preload (at starting):

Add drive pinion preload

0.4 – 0.6 N–m (4 – 6 kgf–cm, 3.5 – 5.2 in.–lbf)

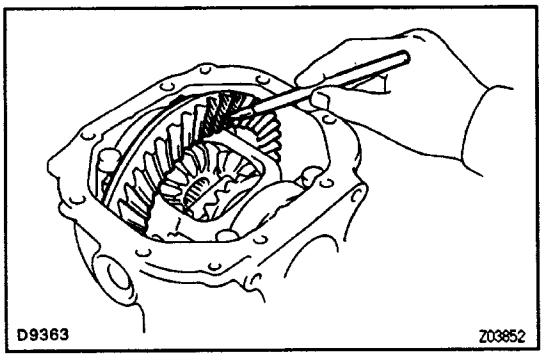

14. INSPECT TOOTH CONTACT BETWEEN RING GEAR AND DRIVE PINION

(a) Coat 3 or 4 teeth at 3 different positions on the ring gear with red lead.
(b) Hold the companion flange firmly and rotate the ring gear in both directions.
(c) Inspect the tooth pattern.

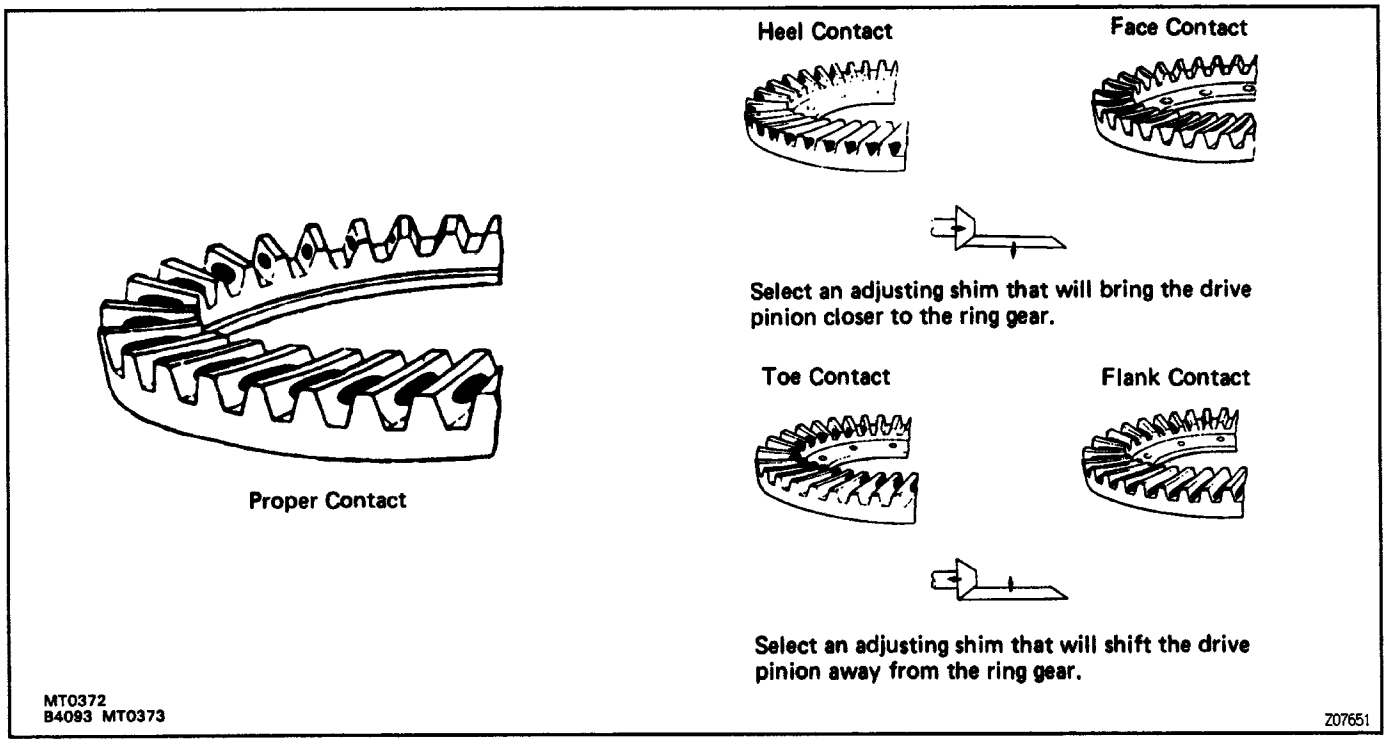

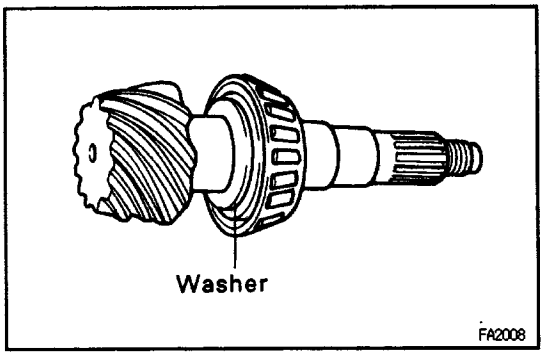

If the teeth are not contacting properly, use the following chart to select a proper washer for correction.
Washer thickness

Thickness mm (in.)	Thickness mm (in.)
2.24 (0.0882)	**2.51 (0.0988)**
2.27 (0.0894)	**2.54 (0.1000)**
2.30 (0.0906)	**2.57 (0.1012)**
2.33 (0.0917)	**2.60 (0.1024)**
2.36 (0.0929)	**2.63 (0.1035)**
2.39 (0.0941)	**2.66 (0.1047)**
2.42 (0.0953)	**2.69 (0.1059)**
2.45 (0.0965)	**2.72 (0.1071)**
2.48 (0.0976)	

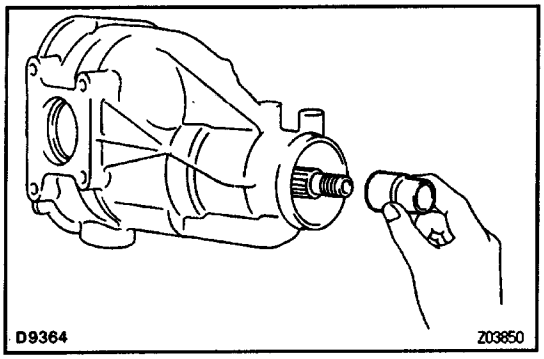

16. INSTALL BEARING SPACER

(a) Remove the companion flange.
(See page SA–57)
(b) Remove the oil slinger and rear bearing.
(See page SA–58)
(c) Install a new bearing spacer.
(d) Install the rear bearing and oil slinger.

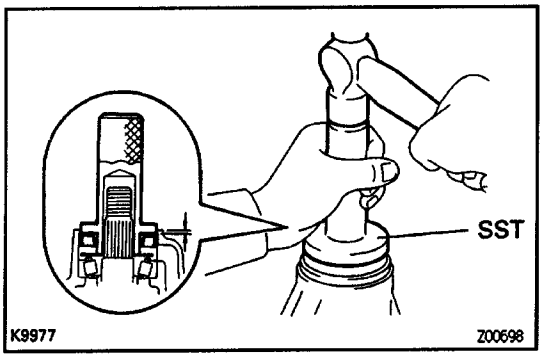

16. INSTALL OIL SEAL

(a) Using SST and a hammer, tap in a new oil seal.
SST 08554–30011
Oil seal drive in depth:
1.5 mm (0.059 in.)
(b) Apply MP grease to the oil seal lip.

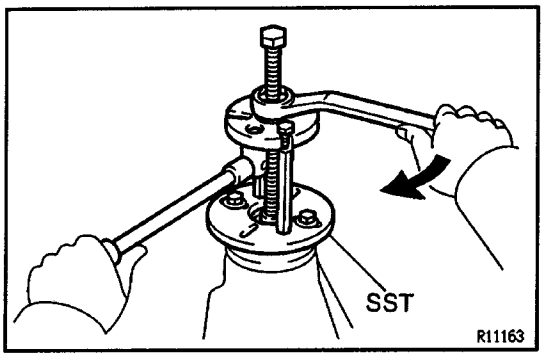

.17. INSTALL COMPANION FLANGE

(a) Using SST, install the companion flange.
SST 09950–30010

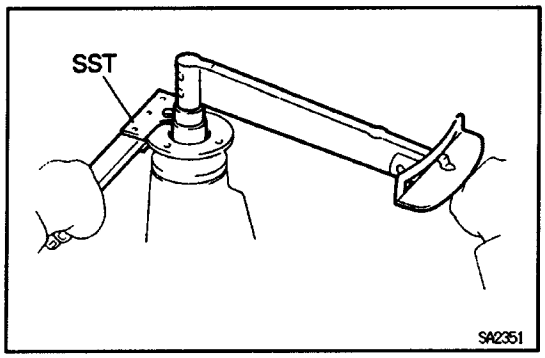

(b) Install the plate washer.
(c) Coat the threads of a new nut with MP grease and install it.
(d) Using SST to hold the flange, tighten the nut.
SST 09330–00021
Torque: 120 N–m (1,225 kgf–cm, 89 ft–lbf

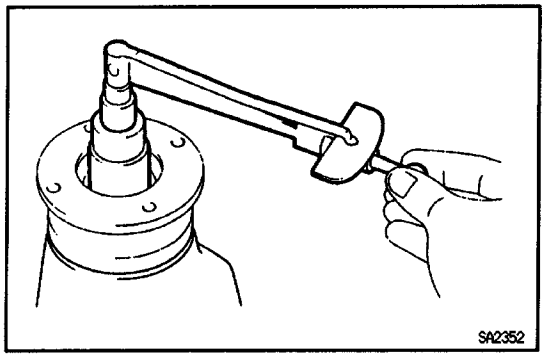

18. CHECK DRIVE PINION PRELOAD

Using a torque wrench, measure the drive pinion preload using the backlash of the drive pinion and ring gear.
New bearing preload (at starting):
1.2 – 1.9 N–m (12 – 19 kgf–cm, 10.4 – 16.5 in.–lbf)
Reused bearing preload (at starting):
0.6 – 1.0 N–m (6 – 10 kgf–cm, 5.2 – 8.7 in.–lbf)

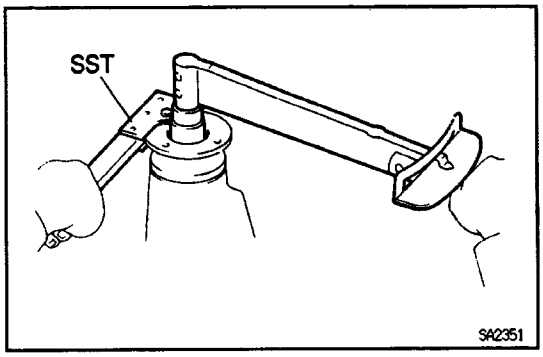

If the preload is greater than the specification, replace the spacer.

If the preload is less than the specification, retighten the nut a little at a time with a torque of 13 N–m (130 kgf–cm, 9 ft–lbf) until the specified preload is reached.

Maximum torque:

223 N–m (2,275 kgf–cm, 165 ft–lbf)

If the maximum torque is exceeded while retightening the nut, replace the spacer and repeat the preload procedure. Do not back off the nut to reduce the preload.

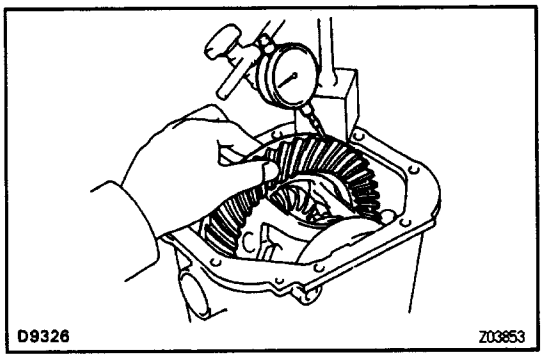

19. RECHECK RING GEAR BACKLASH

(See page SA–73)

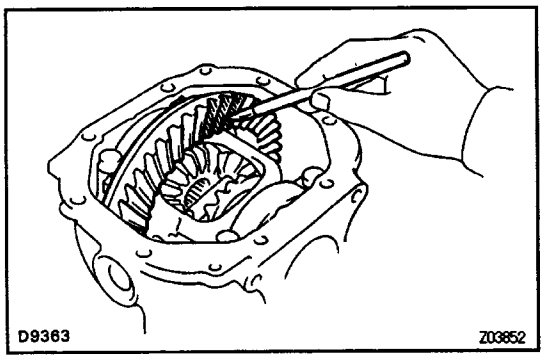

20. RECHECK TOOTH CONTACT BETWEEN RING GEAR AND DRIVE PINION

(See page SA–74)

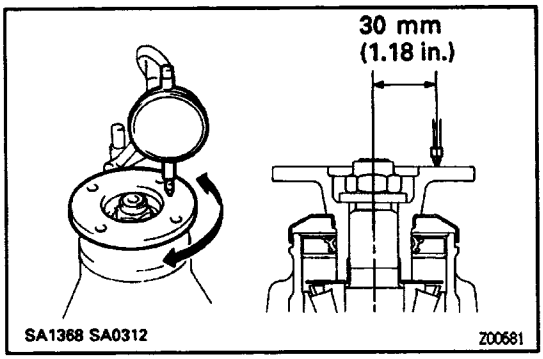

21. CHECK RUNOUT OF COMPANION FLANGE

Using a dial indicator, measure the vertical and lateral runout of the companion flange.

Maximum vertical runout:

0.10 mm (0.0039 in.)

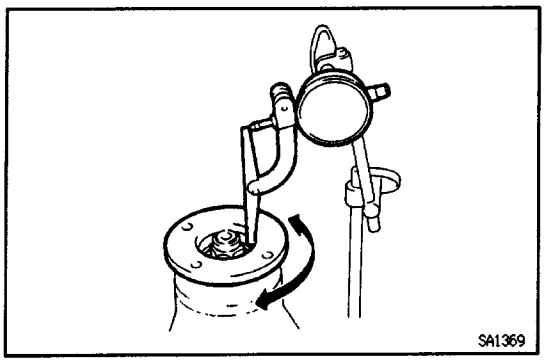

Maximum lateral runout:
0.10 mm (0.0039 in.)
If the runout is greater than maximum, inspect the bearings.

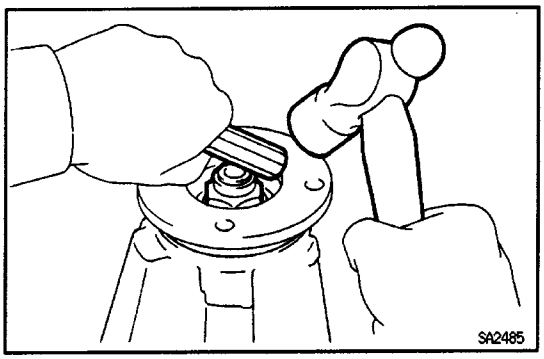

22. STAKE DRIVE PINION NUT

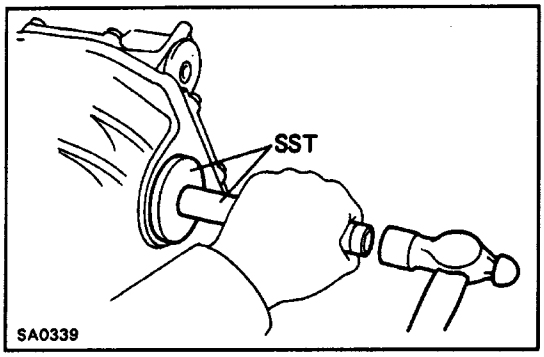

23. INSTALL RH SIDE GEAR SHAFT OIL SEAL
(a) Using SST and a hammer, tap in a new oil seal until its surface is flush with the differential carrier end.
SST 09550–22011 (09550–00020, 09550–00031)
(b) Apply MP grease to the oil seal lip.

24. INSTALL RH SIDE GEAR SHAFT
(a) Install a new snap ring to the side gear shaft.
(b) Using a plastic–faced hammer, tap in the side gear shaft to the differential case.

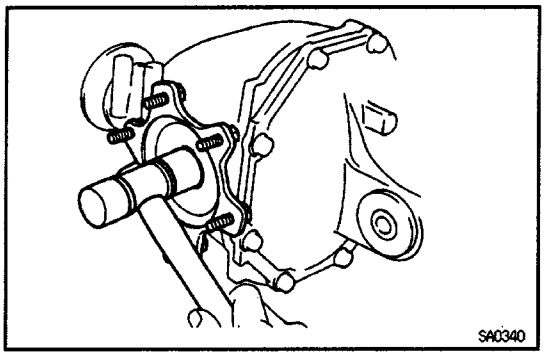

26. CHECK INSTALLATION OF SIDE GEAR SHAFT
(a) Check that there is 2 – 3 mm (0.08 – 0.12 in.) of play in axial direction.
(b) Check that the side gear shaft can not be pulled out by hand.

26. INSTALL INTERMEDIATE SHAFT
(a) Install a new snap ring to the shaft.
(b) Using a plastic–faced hammer, tap in the shaft to the differential case.

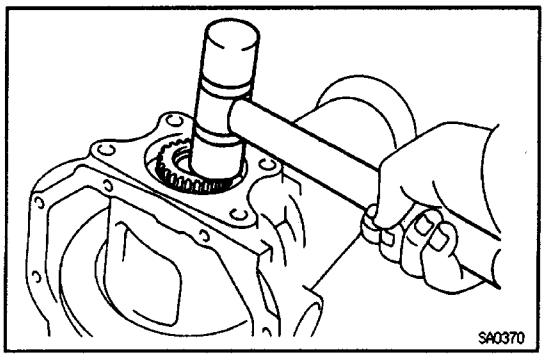

27: CHECK INSTALLATION OF INTERMEDIATE SHAFT
(a) Check that there is 2 – 3 mm (0.08 – 0.12 in.) of play in axial direction.
(b) Check that the intermediate shaft can not be pulled out by hand.

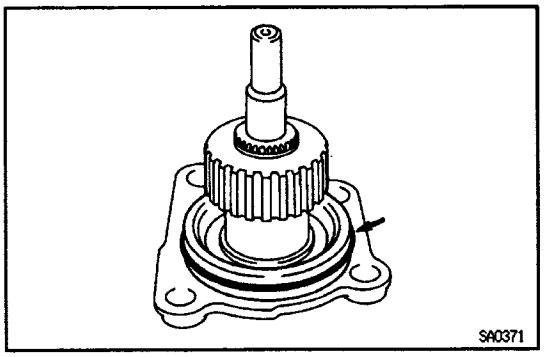

28. INSTALL CLUTCH CASE TO SIDE GEAR SHAFT TUBE

(a) Install a new O–ring to the tube.

(b) Coat the O–ring with MP grease.

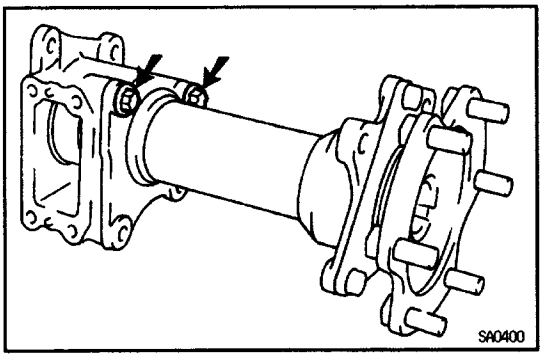

(c) Install the clutch case to the tube.

(d) Torque the 2 torx bolts.

Torx socket E14 (Part No.09044–00010 or locally manufactured tool)

Torque: 78 N–m (800 kgf–cm, 58 ft–lbf)

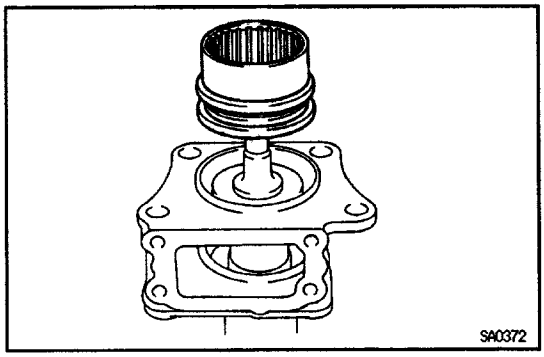

29. INSTALL CLUTCH SLEEVE

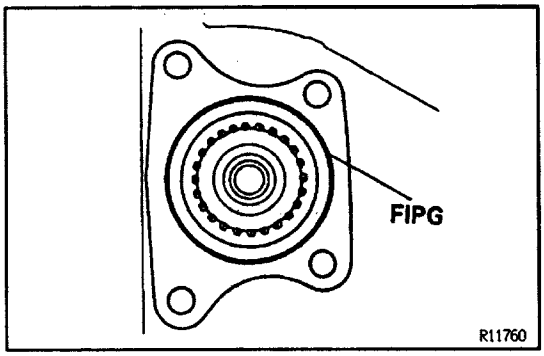

30. INSTALL LH SIDE GEAR SHAFT TO DIFFERENTIAL CARRIER

(a) Remove any old FIPG material and be careful not to drop oil on the contact surfaces of the differential carrier and clutch case.

(b) Clean contact surfaces of any residua) FIPG material using gasoline or alcohol.

(c) Apply FIPG to the carrier, as shown.

FIPG:

Part No. 08826–00090, THREE BOND 1281 or equivalent

HINT: Install the side gear shaft within ten minutes after applying FIPG.

(d) Install LH side gear shaft to the differential carrier.

(e) Torque the 4 torx bolts.

Torx socket E14 (Part No.09044–00010 or locally manufactured tool)

Torque: 78 N–m (800 kgf–cm, 58 ft–lbf)

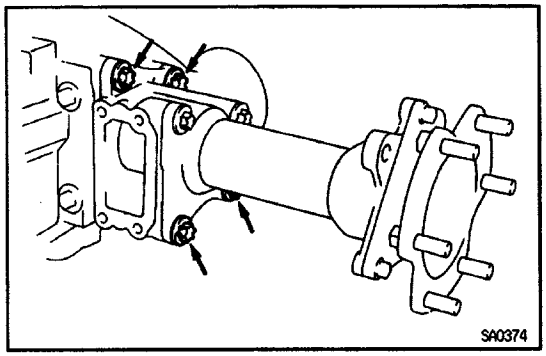

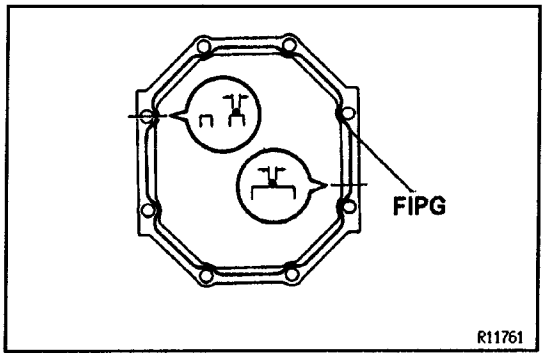

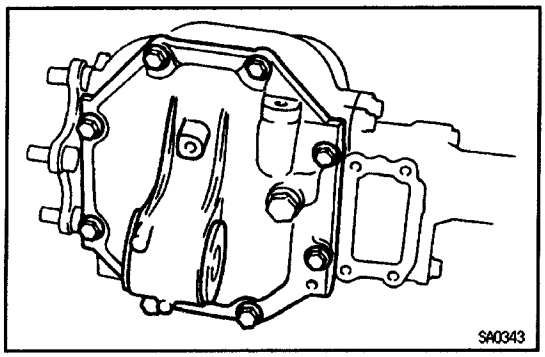

31. INSTALL DIFFERENTIAL CARRIER COVER

(a) Remove any old FIPG material and be careful not to drop oil on the contact surfaces of the differential carrier and carrier cover.

(b) Clean contacting surfaces of any residual FIPG material using gasoline or alcohol.

(c) Apply FIPG to the carrier cover, as shown.

FIPG:

Part No. 08826–00090, THREE BOND 1281 or equivalent

FIPG width approx:

1–2 mm (0.04–0.08 in.)

HINT: Install the carrier cover within 10 minutes after applying FIPG.

(d) Install the differential carrier cover with the 8 bolts.

Torque: 47 N–m (475 kgf–cm, 34 ft–lbf)

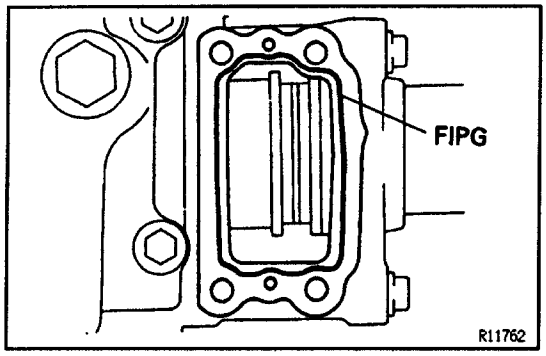

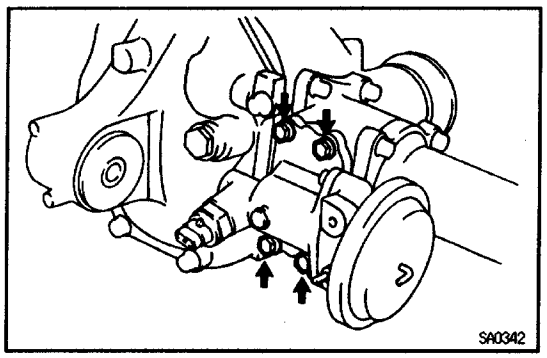

32. INSTALL A.D.D. ACTUATOR

(a) Remove any old FIPG material and be careful not to drop oil on the contact surfaces of the actuator and clutch case.

(b) Clean contact surfaces of any residual FIPG material using gasoline or alcohol.

(c) Apply FIPG to the clutch case, as shown.

FIPG:

Part No. 08826–00090, THREE BOND 1281 or equivalent

HINT: Install the actuator within 10 minutes after applying FIPG.

(d) Torque the 4 bolts.

Torque: 21 N–m (210 kgf–cm, 15 ft–lbf)

ON–VEHICLE REPAIR

COMPONENTS

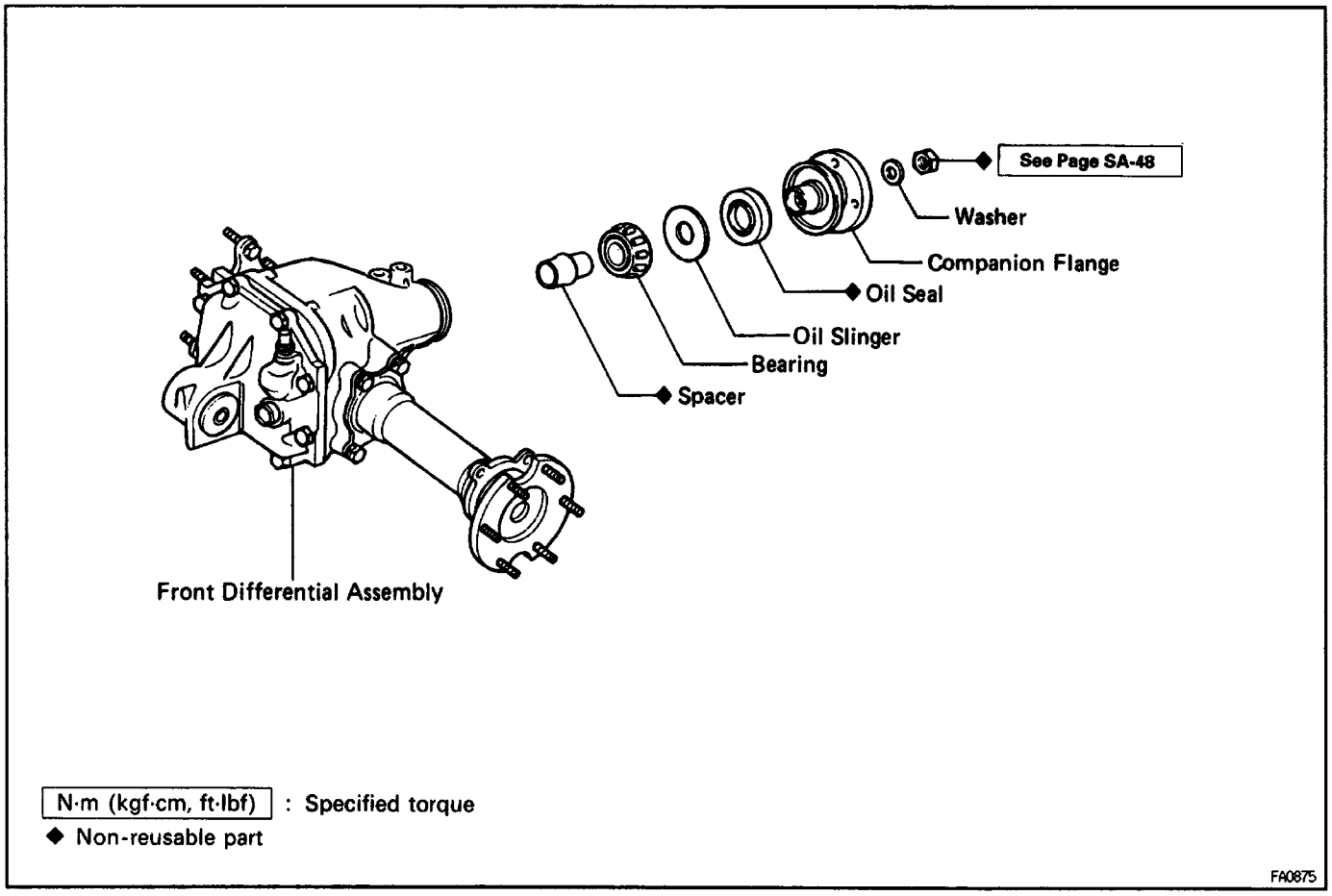

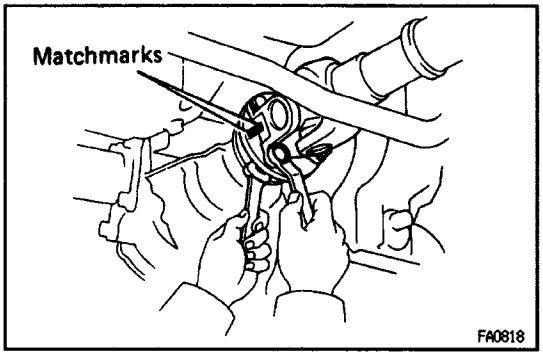

REAR OIL SEAL REPLACEMENT

1. DRAIN DIFFERENTIAL OIL

2. DISCONNECT FRONT PROPELLER SHAFT

(a) Place matchmarks on the flanges.

(b) Remove the 4 nuts, washers and bolts, disconnect the front propeller shaft.

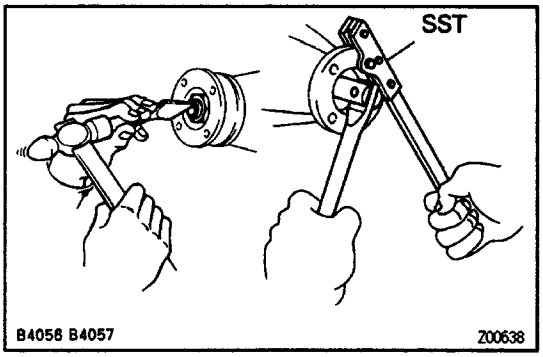

3. REMOVE COMPANION FLANGE

(a) Using a chisel and hammer, loosen the staked part of the nut.

(b) Using SST to hold the flange, remove the nut and washer.

SST 09330–00021

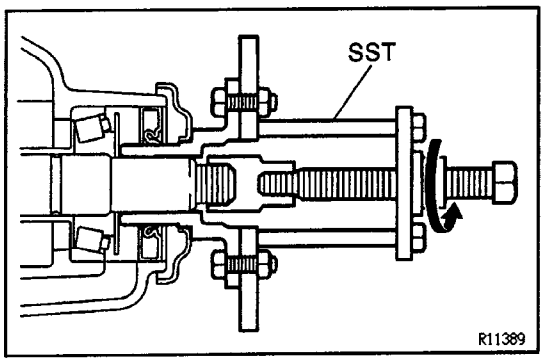

(c) Using SST, remove the companion flange.
SST 09950–30010

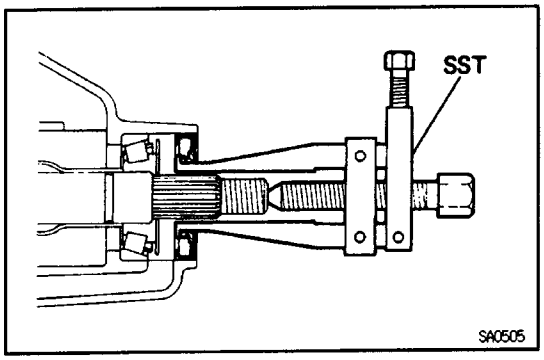

4. REMOVE OIL SEAL AND OIL SLINGER

(a) Using SST, remove the oil seal.
SST 09308–10010
(b) Remove the oil slinger.

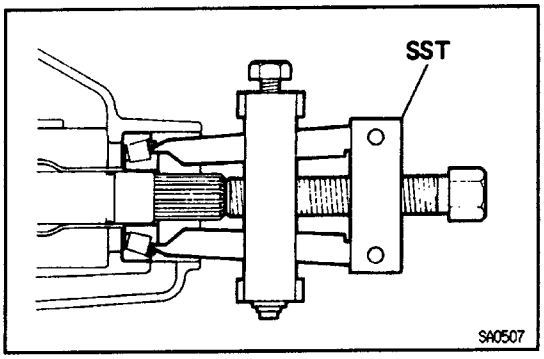

5. REMOVE REAR BEARING AND BEARING SPACER

(a) Using SST, remove the rear bearing from the drive pinion.
SST 09556 – 22010
(b) Remove the bearing spacer.

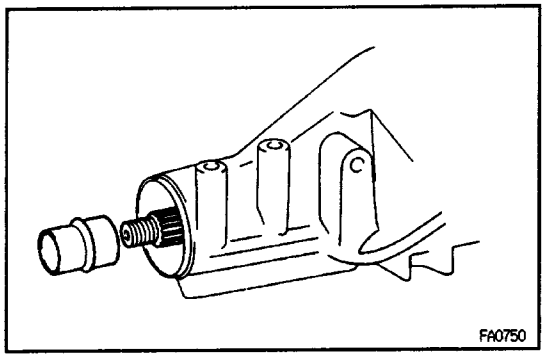

6. INSTALL BEARING SPACER, REAR BEARING AND OIL SLINGER

(a) Install a new bearing spacer on the drive pinion.
(b) Install the rear bearing on the drive pinion.
(c) Install the oil slinger.

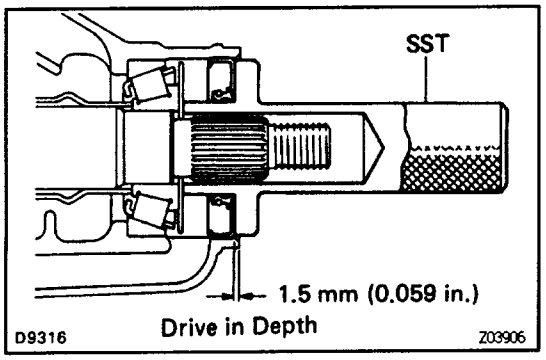

7. INSTALL OIL SEAL

(a) Using SST, drive a new oil seal.
SST 09554–30011
Oil seal drive in depth:
1.5 mm (0.059 in.)
(b) Apply MP grease to the oil seal lip.

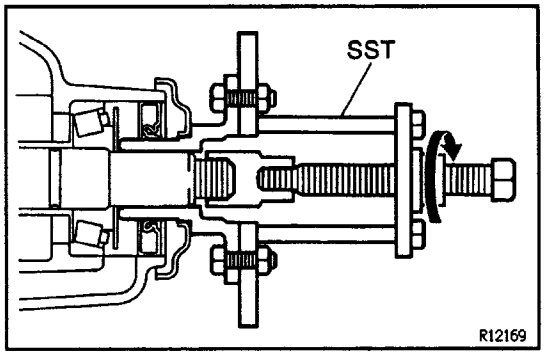

8. INSTALL COMPANION FLANGE

(a) Using SST, install the companion flange on the drive pinion.
SST 09950 – 30010

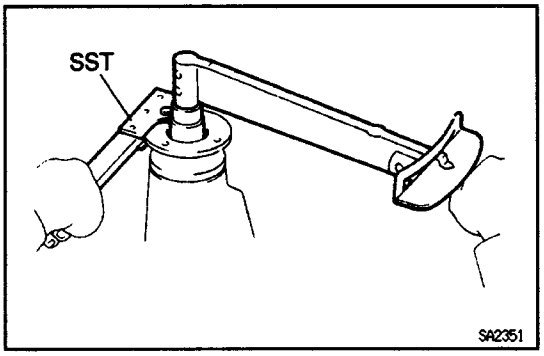

(b) Coat the threads of a new nut with MP grease.

(c) Using SST to hold the flange, torque the nut.
SST 09330–00021

Torque: 120 N–m (1,225 kgf–cm, 89 ft–lbf)

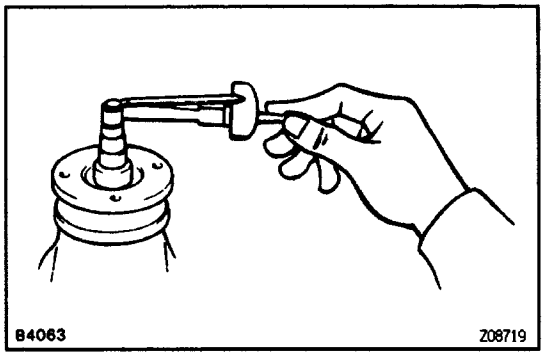

9. ADJUST DRIVE PINION PRELOAD

Using a torque wrench, measure the preload of the backlash between the drive pinion and ring gear.

New bearing preload (at starting):

1.2 – 1.9 N–m (12 – 19 kgf–cm, 10.4 – 16.5 in.–lbf)

Reused bearing preload (at starting):

0.6 – 1.0 N–m (6 – 10 kgf–cm, 5.2 – 8.7 in–lbf)

If the preload is greater than specification, replace the bearing spacer.

e If the preload is less than specification, retighten the nut a little at a time with a torque of 13 N–m (130 kgf/cm, 9 ft–lbf) until the specified preload is reached.

Maximum torque:

223 N–m (2,275 kgf–cm, 165 ft–lbf)

If the maximum torque is exceeded while retightening the nut, replace the bearing spacer and repeat the preload procedure. Do not back off the pinion nut to reduce the preload.

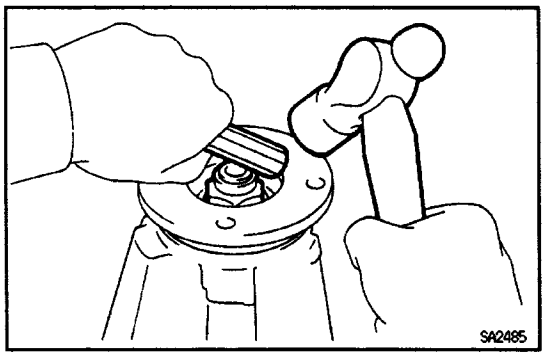

10. STAKE DRIVE PINION NUT

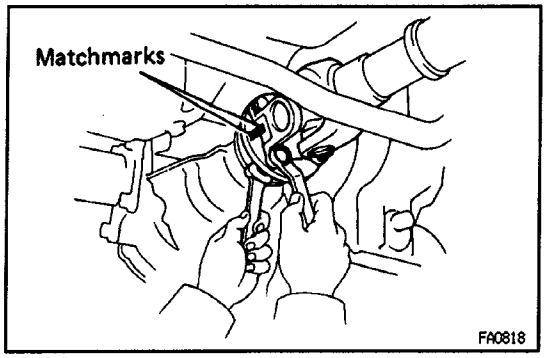

11. CONNECT FRONT PROPELLER SHAFT

(a) Align the matchmarks and connect the propeller shaft to the companion flange with the 4 bolts, washers and nuts.

(b) Torque the bolts.

Torque: 74 N–m (750 kgf–cm, 54 ft–lbf)

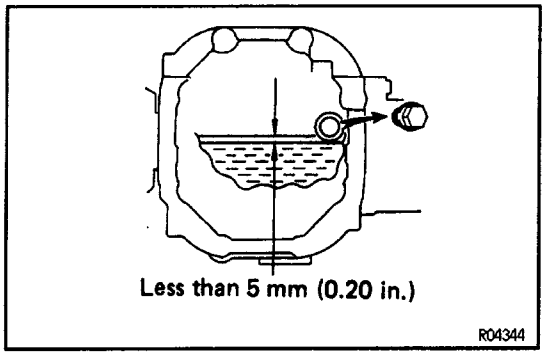

12. FILL DIFFERENTIAL WITH GEAR OIL

w/ A. D. D.:

Oil type:

Hypoid gear oil API GL–5

Recommended oil viscosity:

SAE 75W–90

Capacity:

1.86 liters (1.97 US qts, 1.64 Imp. qts)

w/o A.D.D.:

oil type:

Hypoid gear oil API GL–5

Recommended oil viscosity:

Above –18˚ C (0˚ F) SAE 90

Below –18˚ C (0* F) SAE 80W or 80W – 90

Capacity:

1.60 liters (1.69 US qts, 1.41 Imp. qts)

PREPARATION

SST (SPECIAL SERVICE TOOLS)

	09226–10010 Crankshaft Front & Rear Bearing Replacer	
	09308–00010 Oil Seal Puller	
	09308–10010 Oil Seal Puller	
	09316–60010 Transmission & Transfer Bearing Replacer	
	(09316–00040) Replacer 'C'	
	09330–00021 Companion Flange Holding Tool	
	09350–20015 TOYOTA Automatic Transmission Tool Set	
	(09369–20040) Piston Spring Compressor Set	
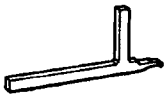	09504–22011 Differential Side Bearing Replacer	
	09506–30012 Differential Drive Pinion Rear Bearing Cone Replacer	
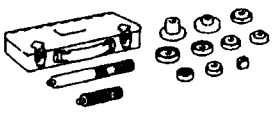	09550–10012 Replacer Set 'B"	
	(09558–10010) Rear Axle Shaft Oil Seal Replacer	
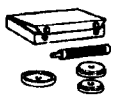	09550–22011 Rear Axle Bearing & Differential Tool Set	

	(09550–00020) Handle	
	(09550–00031) Replacer	
	09554–14010 Differential Oil Seal Replacer	
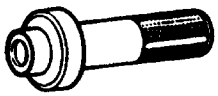	09554–30011 Differential Oil Seal Replacer	
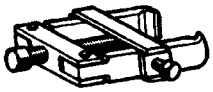	09556–22010 Drive Pinion Front Bearing Remover	
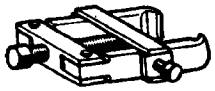	09556–30010 Drive Pinion Front Bearing Remover	
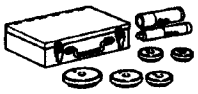	09608–30012 Front Hub & Drive Pinion Bearing Tool Set	
	(09608–04060) Front Hub Outer Bearing Cup Replacer	
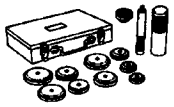	09608–35014 Axle Hub & Drive Pinion Bearing Tool Set	
	(09608–06020) Handle	
	(09608–06110) Front Hub Inner & Drive Pinion Front Bearing Cup Replacer	
	(09608–06120) Front Hub Outer Bearing Cup Replacer	
	09620–30010 Steering Gear Box Replacer Set	
	(09625–30010) Steering Main Shaft Bearing Replacer	

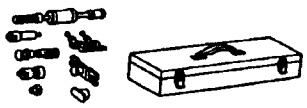	09910–00015 Puller Set	
	(09911–00011) Puller Clamp	
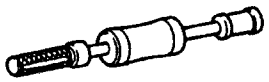	(09912–00010) Puller Slide Hammer	
	(09914–00011) Rear Axle Shaft Puller Attachment	
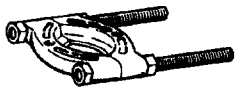	09950–00020 Bearing Remover	
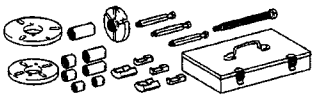	09950–30010 Puller A Set	
	09950–40010 Puller B Set	

RECOMMENDED TOOLS

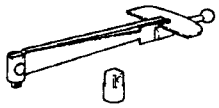	09025–00010 Torque Wrench (30 kgf–cm) .	
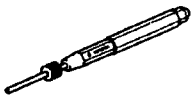	09031–00030 Pin Punch .	
	09044–00010 Tom Socket E 14 .	

EQUIPMENT

Dial indicator or dial indicator with magnetic base	
Micrometer	
Torque wrench	

LUBRICANT

Item	Capacity	Classification
Differential oil (w/A.D.D.)	1.86 liters (1.97 Us qts, 1.64 Imp.qts)	AN GL–5 Hypoid gear oil 75W–90
Differential oil (w/o A.D.D.)	1.60 liters (1.69 US qts, 1.41 Imp.qts)	API GL–5 Hypoid gear oil [Above –18˚ C (0˚ F)] SAE 90W [Below –18* C (0 F)] SAE 80W or 80W –90

SSM (SPECIAL SERVICE MATERIALS)

08826–00090	Seal Packing 1281, THREE BOND 1281 or equivalent (FIPG)	Differential carrier x Cover A.D.D. actuator x Clutch case Clutch case x Differential carrier

FRONT DRIVE SHAFT

DESCRIPTION

The front drive shaft has a slidable tripod type CVJ (Constant Velocity Joint) on the differential side and Rzeppa type CVJ on the wheel side.

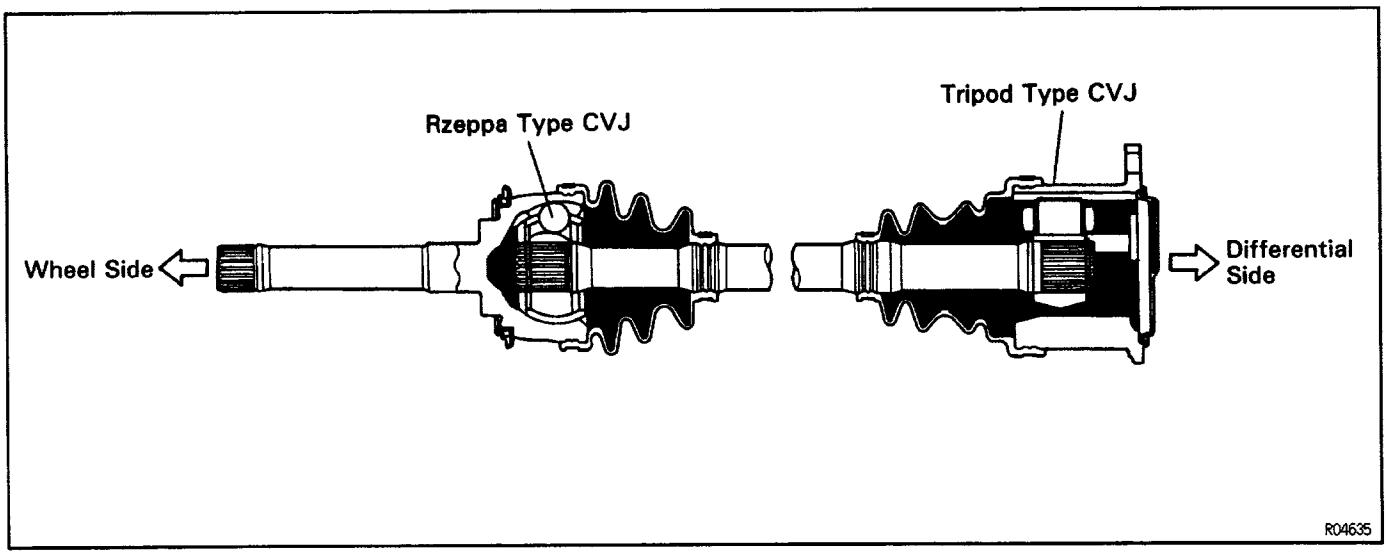

FRONT DRIVE SHAFT

COMPONENTS

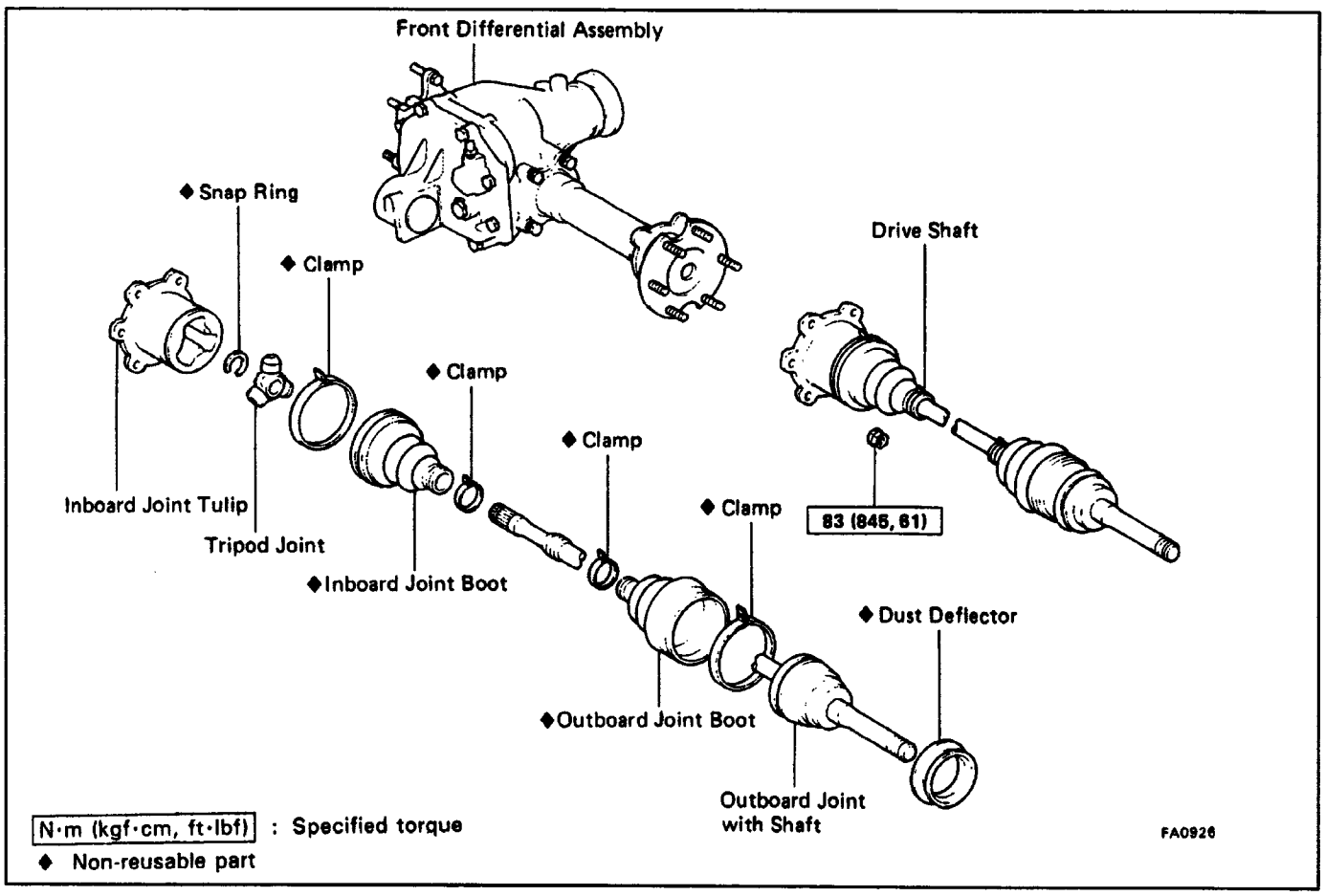

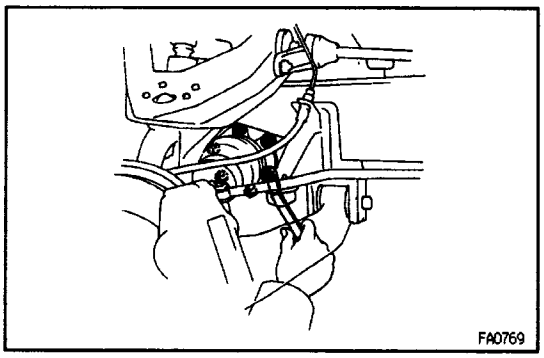

FRONT DRIVE SHAFT REMOVAL

1. JACK UP VEHICLE AND REMOVE FRONT WHEEL

2. LOOSEN NUTS HOLDING FRONT DRIVE SHAFT

Loosen the 6 nuts, while depressing the brake pedal.

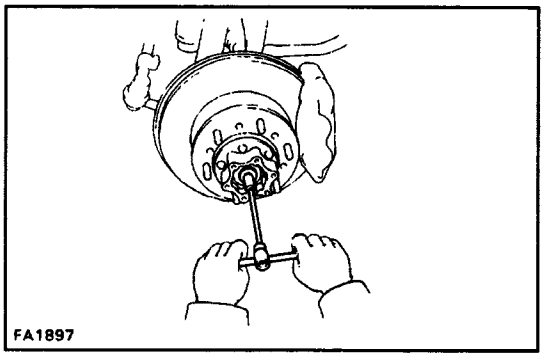

3. REMOVE FREE WHEELING HUB OR FLANGE

Free wheeling hub (See page SA–26)

Flange (See page SA–13)

4. REMOVE SNAP RING AND SPACER

Using a snap ring expander, remove the snap ring from the drive shaft.

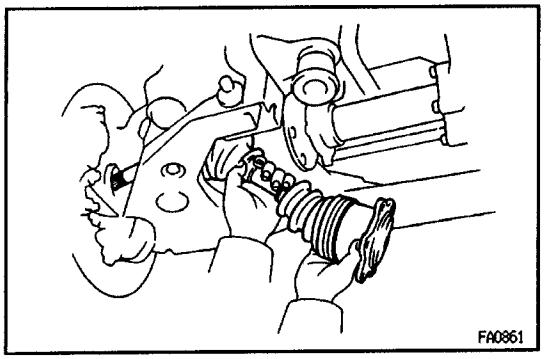

5. REMOVE FRONT DRIVE SHAFT

First pull the front drive shaft inboard joint tulip from the side gear shaft, and then pull it out from the steering knuckle.

FRONT DRIVE SHAFT DISASSEMBLY

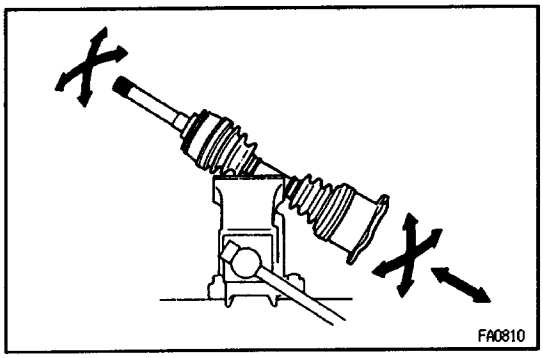

1. CHECK DRIVE SHAFT

(a) Check to see there is no play in the inboard and outboard joints.

(b) Check to see that the inboard joint slides smoothly in the thrust direction.

(c) Check to see that there is no obvious play in the radial direction of the universal joints.

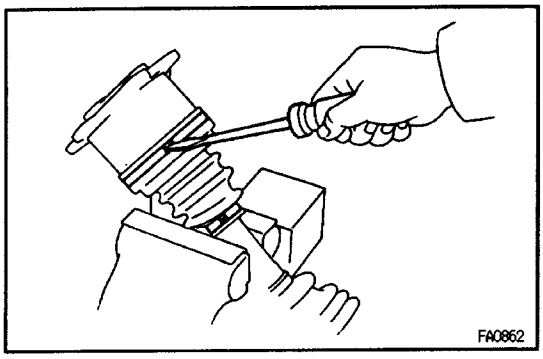

2. REMOVE INBOARD JOINT BOOT CLAMPS

(a) Using a screwdriver, remove the 2 boot clamps.

(b) Slide the inboard joint boot toward the outboard joint.

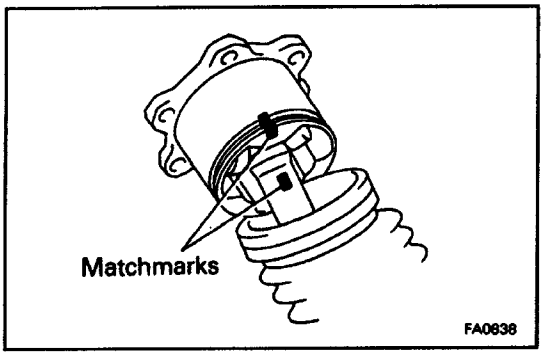

3. DISASSEMBLE INBOARD JOINT TULIP

(a) Place matchmarks on the inboard joint tulip and shaft.

NOTICE: Do not punch the marks.

(b) Remove the inboard joint tulip from the drive shaft.

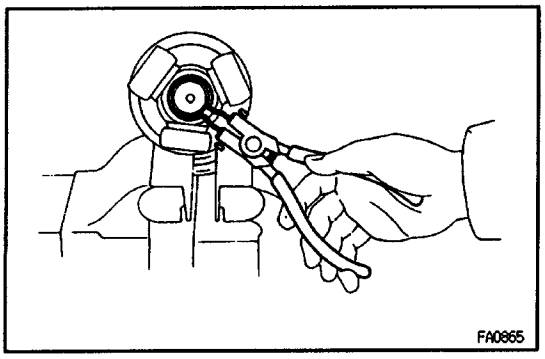

4. DISASSEMBLE TRIPOD JOINT

(a) Using a snap ring expander and remove the snap ring.

(b) Place matchmarks on the shaft and tripod joint.

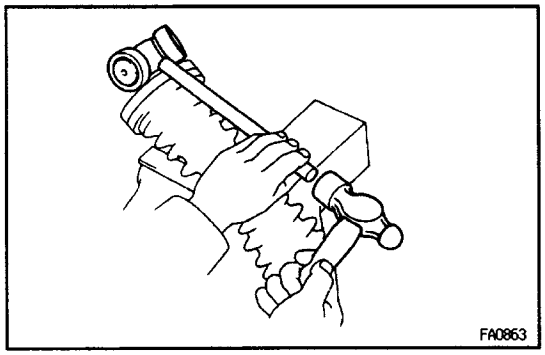

(c) Using a brass bar and hammer, remove the tripod joint from the drive shaft.

NOTICE: Do not punch the roller.

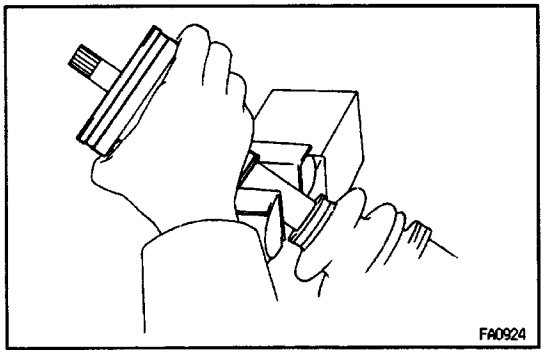

5. REMOVE INBOARD JOINT BOOT

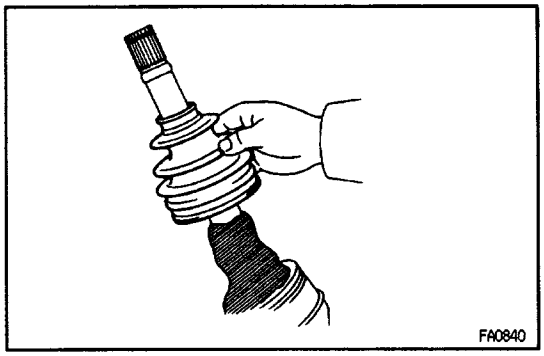

6. REMOVE OUTBOARD JOINT BOOT CLAMPS AND BOOT

(a) Using a screwdriver, remove the 2 boot clamps from the outboard joint.

(b) Remove the boot from the outboard joint.

NOTICE: Do not disassemble the outboard joint.

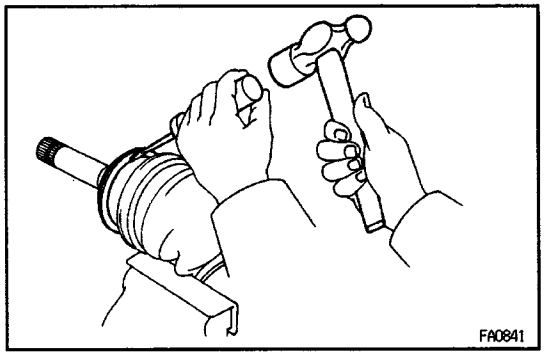

7. REMOVE DUST DEFLECTOR

Using a screwdriver and hammer, remove the dust deflector.

FRONT DRIVE SHAFT ASSEMBLY

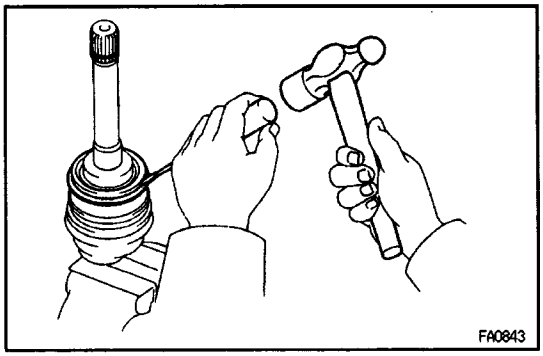

1. INSTALL DUST DEFLECTOR

Using a screwdriver and hammer, install a new dust deflector.

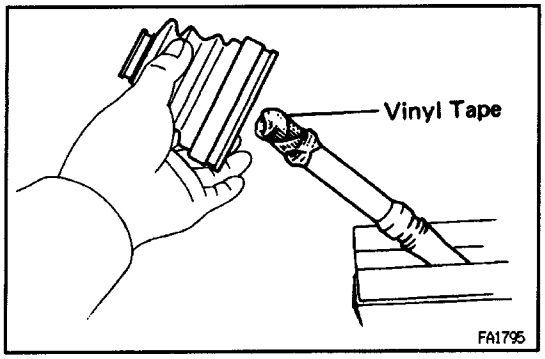

2. TEMPORARILY INSTALL NEW BOOT AND NEW BOOT CLAMPS TO OUTBOARD JOINT

HINT: Before installing the boot, wrap vinyl tape around the spline of the shaft to prevent damaging the boot.

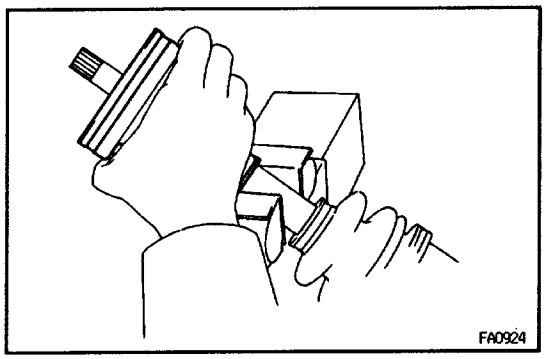

3. TEMPORARILY INSTALL NEW BOOT AND NEW BOOT CLAMPS FOR INBOARD JOINT TO DRIVE SHAFT

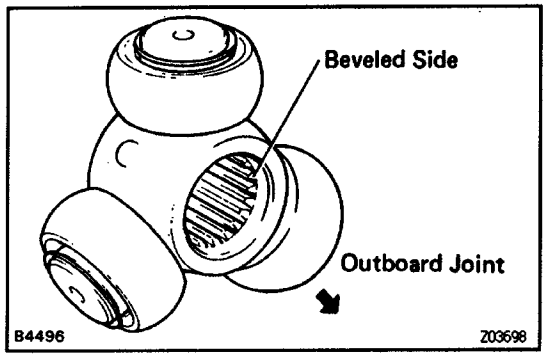

4. ASSEMBLY TRIPOD JOINT

(a) Place the beveled side of the tripod axial spline toward the outboard joint.

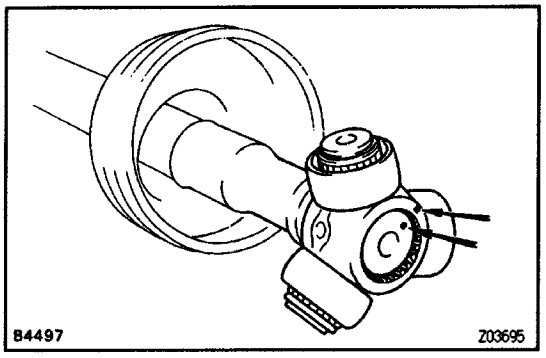

(b) Align the matchmarks placed before disassembly.

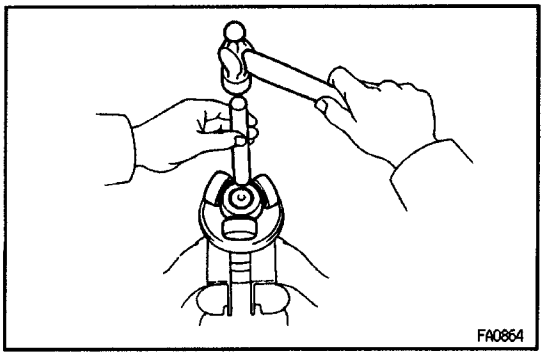

(c) Using a brass bar and hammer, tap in the tripod joint onto the drive shaft.

NOTICE: Do not punch the roller.

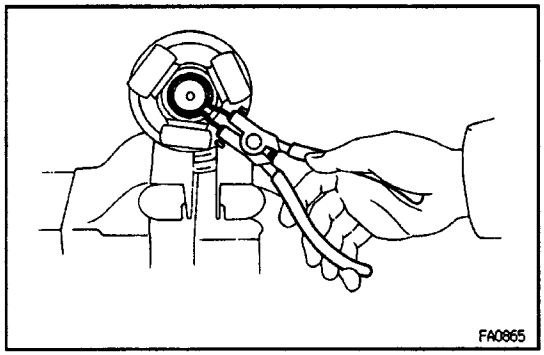

(d) Using a snap ring expander, install a new snap ring.

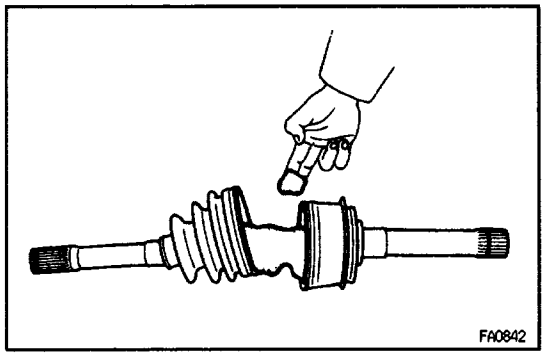

5. ASSEMBLE BOOT TO OUTBOARD JOINT

Before assembling the boot, pack in grease.

HINT: Use the black grease supplied in the boot kit.

Grease capacity:

176 – 186 9 (0.39 – 0.41 lb)

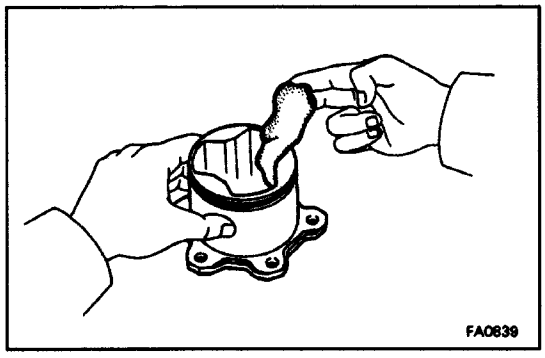

6. ASSEMBLE INBOARD JOINT TO INBOARD JOINT TULIP

(a) Pack in grease to the inboard tulip and boot.

HINT: Use the brown grease supplied in the boot kit.

Grease capacity:

270 – 280 g (0.60 – 0.62 lb)

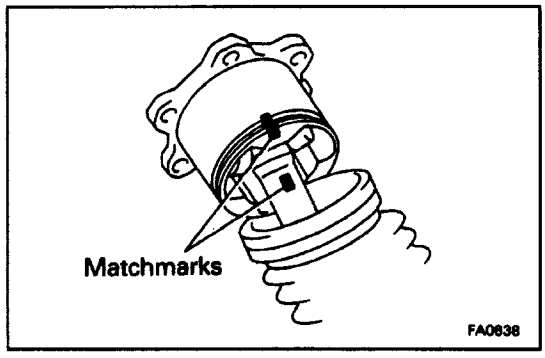

(b) Align the matchmarks placed before disassembly.

(c) Install the inboard tulip to the drive shaft.

(d) Temporarily install the boot to the inboard tulip.

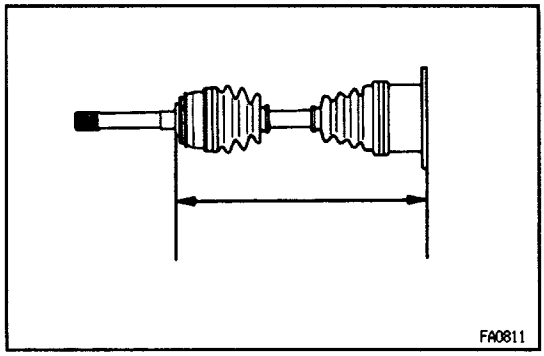

7. ASSEMBLE BOOT CLAMPS TO BOTH BOOTS

(a) Be sure the boot is on the shaft groove.

(b) Ensure that the boot is not stretched or contracted when the drive shaft is at standard length.

Standard length:

393.9 – 403.9 mm (15.508 – 15.902 in.)

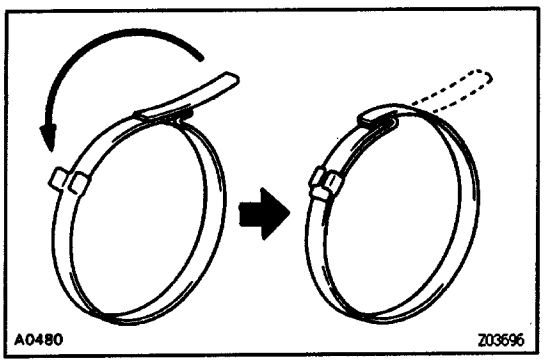

(c) Bend the band and lock it, as shown in the illustration.

FRONT DRIVE SHAFT INSTALLATION

1. APPLY MOLYBDENUM DISULPHIDE LITHIUM BASE GREASE

Apply molybdenum disulphide lithium base grease to the outboard joint shaft.

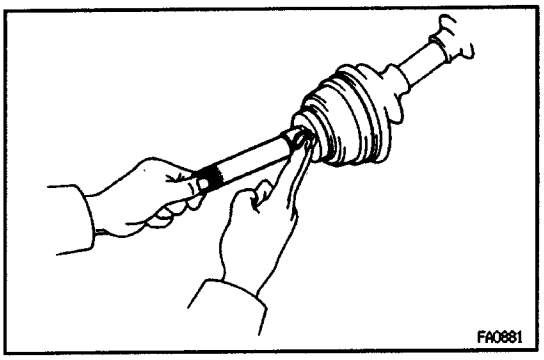

2. INSTALL FRONT DRIVE SHAFT

(a) First insert the outboard joint shaft to the steering knuckle, and then install it to the side gear shaft.

HINT: Do not damage the boots.

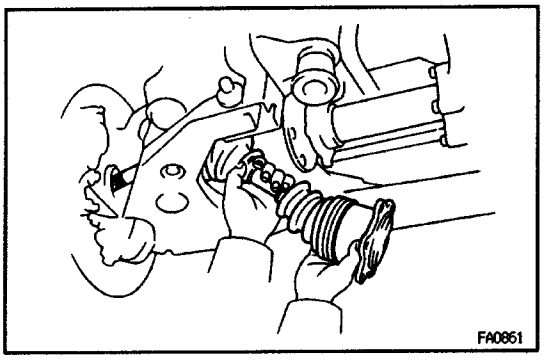

(b) Temporarily install the 6 nuts.

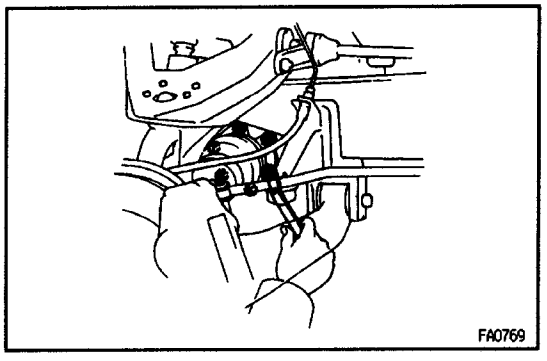

3. INSTALL SPACER AND SNAP RING

(a) Install the spacer.

(b) Using a snap ring expander, install the snap ring to the outboard joint shaft.

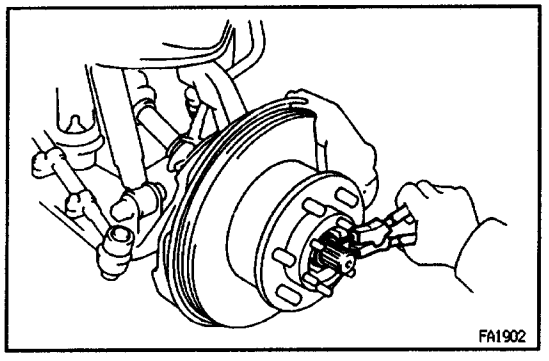

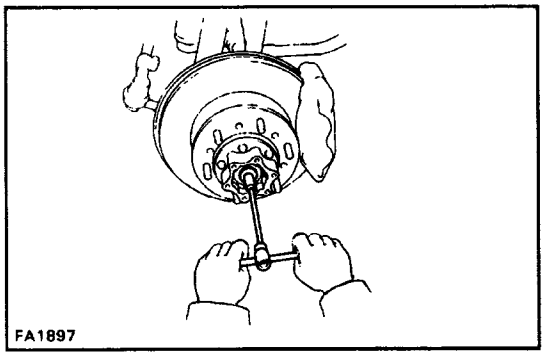

4. INSTALL FREE WHEELING HUB OR FLANGE

Free wheeling hub (See page SA–30)

Flange (See page SA–18)

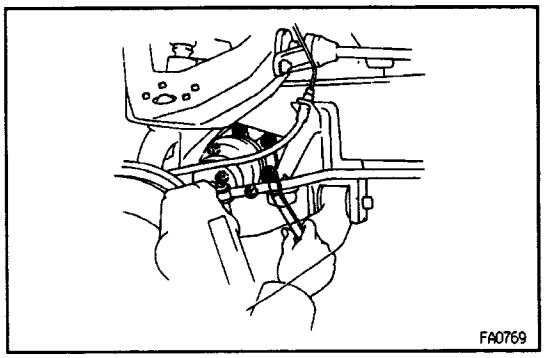

5. TORQUE FRONT DRIVE SHAFT INSTALLATION NUTS

Torque the6 nuts, while depressing the brake pedal.

Torque: 83 N–m (845 kgf–cm, 61 ft–lbf)

6. INSTALL FRONT WHEEL AND LOWER VEHICLE

Torque: 103 N–m (1,050 kgf–cm, 76 ft–lbf)

PREPARATION

RECOMMENDED TOOLS

	**09905–00012** Snap Ring No.1 Expander.	

EQUIPMENT

Torque wrench	

LUBRICANT

Item	Capacity	Classification
Outboard joint grease	**176–186 g (0.39–0.41 lb)**	
Inboard joint grease	**270–280 g (0.60–0.62 lb)**	

FRONT SUSPENSION

DESCRIPTION

Double wishbone type suspension is used in the front suspension.

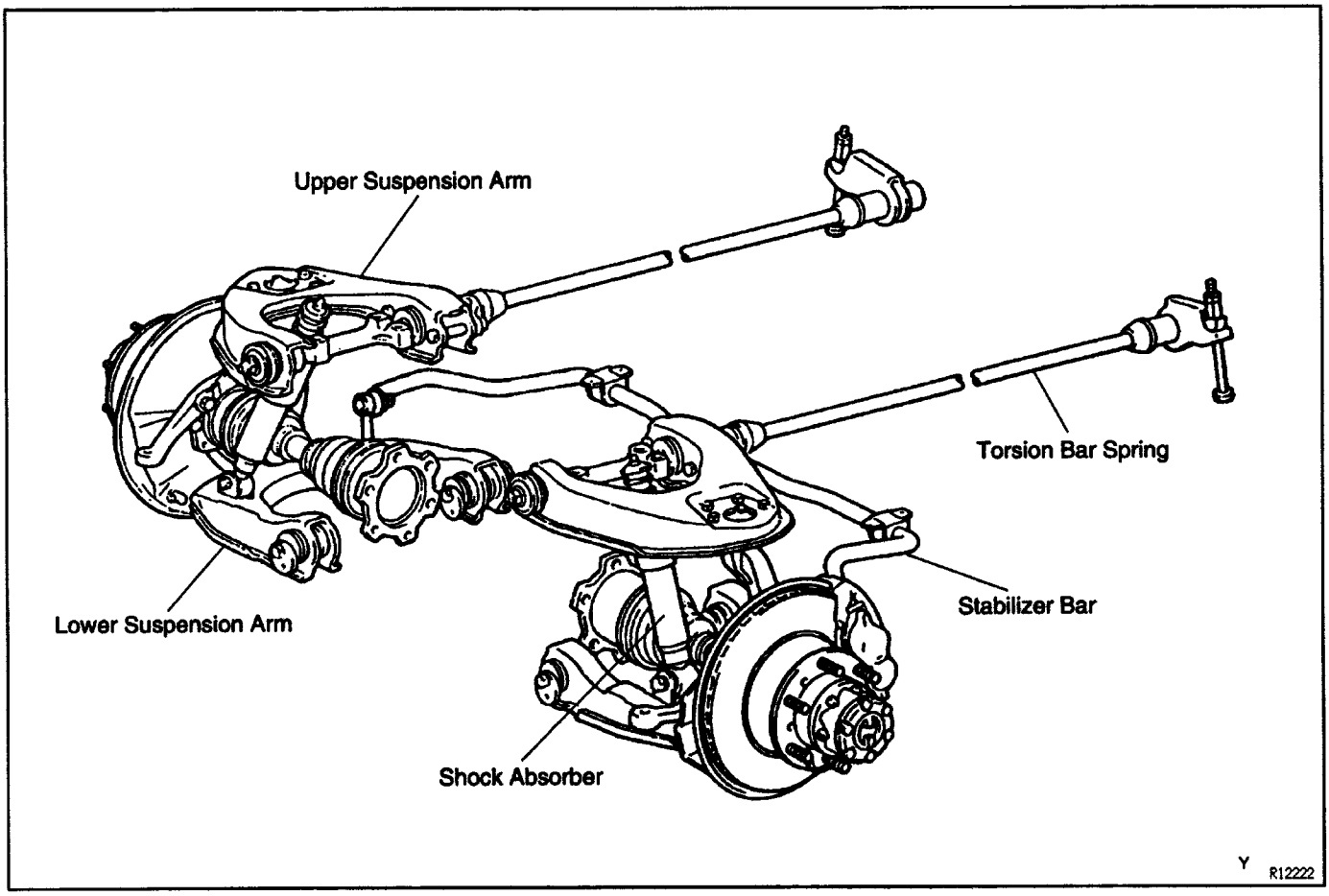

FRONT SHOCK ABSORBER
COMPONENTS

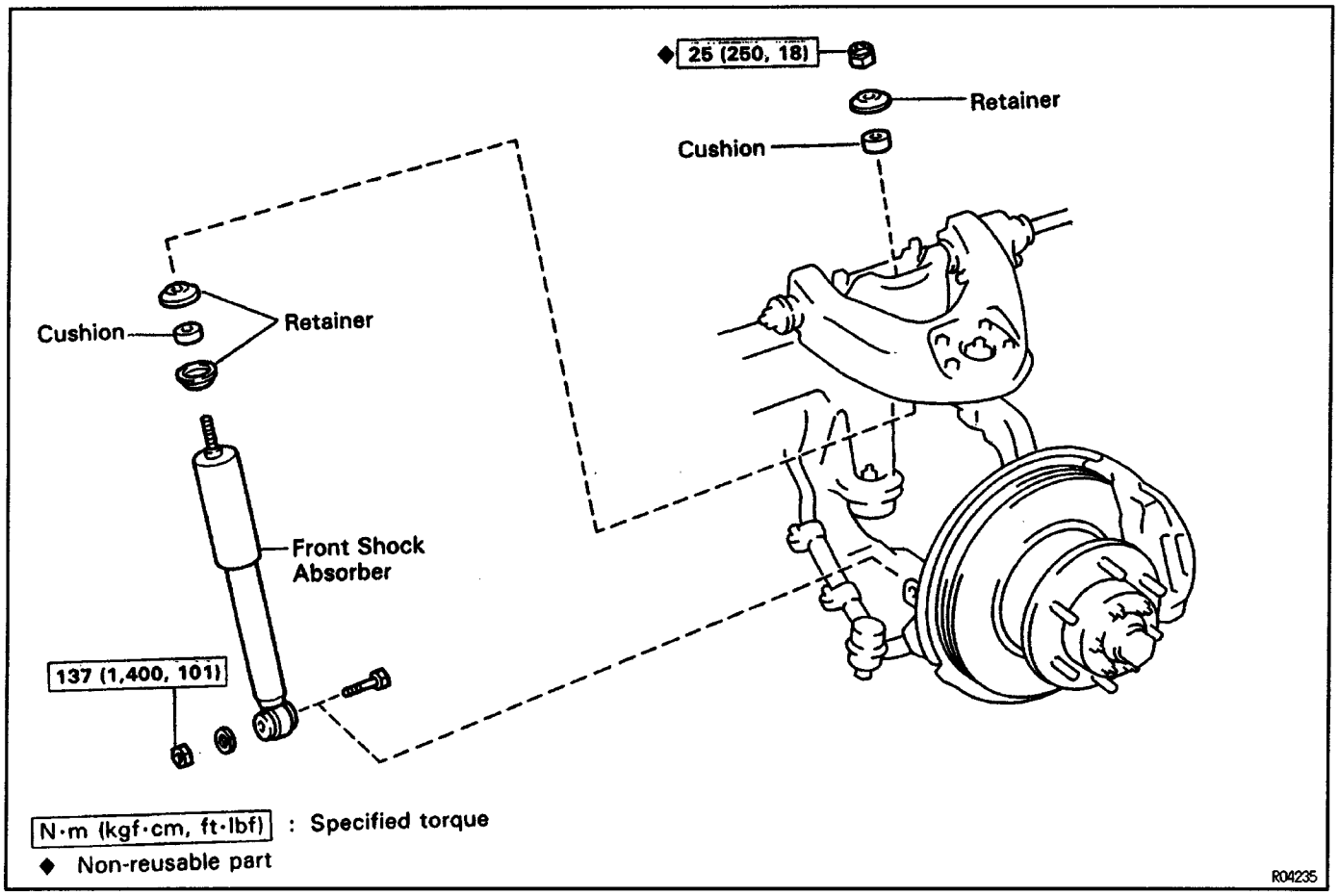

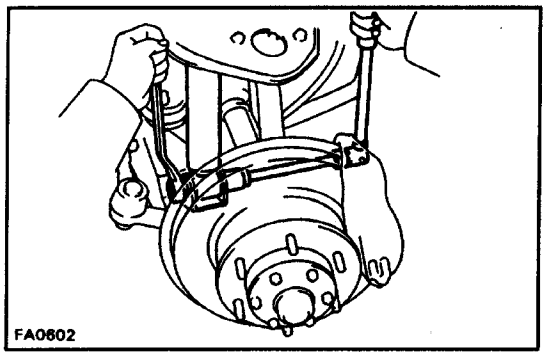

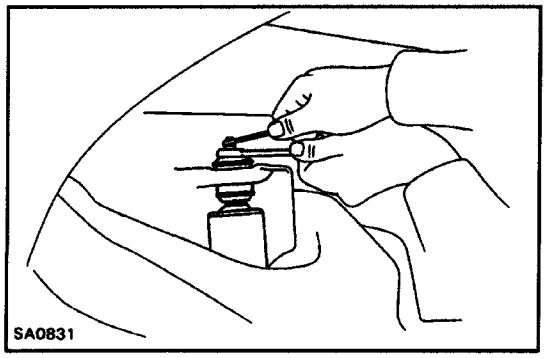

FRONT SHOCK ABSORBER REMOVAL

1. JACK UP VEHICLE AND REMOVE FRONT WHEEL

2. REMOVE FRONT SHOCK ABSORBER

(a) Remove the nut, washer and bolt, disconnect the shock absorber from the lower suspension arm bracket.

(b) Remove the nut, cushion and retainer.

(c) Disconnect the shock absorber from the frame.

(d) Remove the retainers and cushion from the shock absorber.

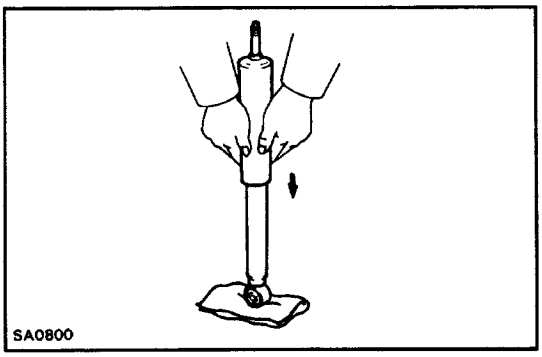
SA0800

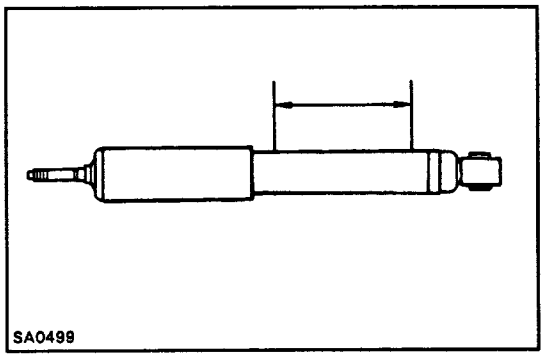
SA0499

FRONT SHOCK ABSORBER INSPECTION

1. INSPECT OPERATION OF FRONT SHOCK ABSORBER

(a) While pushing the shock absorber, check that the pull throughout the stroke is even, and that there is no abnormal resistance or noise.

(b) Gas Filled Type:

Fully push the shock absorber in and release it.

Check that it returns at a constant speed throughout.

HINT: If the shock absorber is the gas filled type, this information will be engraved on the exterior of the outer shell.

2. GAS FILLED TYPE:

DISCARD FRONT SHOCK ABSORBER

Before discarding the shock absorber, drill a hole 2 – 3 mm (0.079 – 0.118 in.) in diameter at the location shown in the illustration to release the gas inside.

NOTICE:

When drilling, chips may fly out; work carefully.

The gas is colorless, odorless, and non–poisonous.

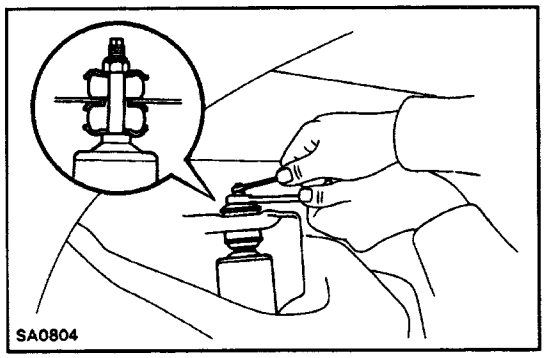
SA0804

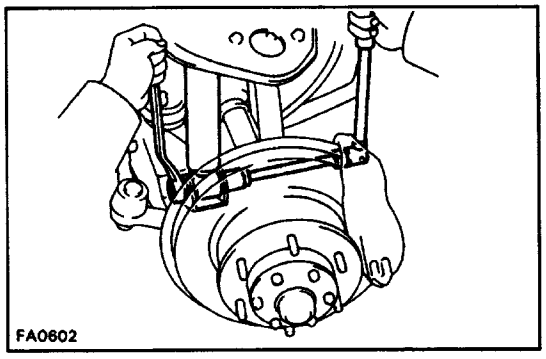
FA0602

FRONT SHOCK ABSORBER INSTALLATION

1. INSTALL FRONT SHOCK ABSORBER

(a) Install the retainers and cushion from the shock absorber.

(b) Install the shock absorber to the frame with the cushion and retainer, as shown in the illustration.

(c) Install and torque a new nut.

Torque: 25 N–m (250 kgf–cm 18 ft–lbf)

(d) Install the bolt, washer and nut, connect the shock absorber to the lower suspension arm bracket.

Torque: 137 N–m (1,400 kgf–cm, 101 ft–lbf)

2. INSTALL FRONT WHEEL AND LOWER VEHICLE

Torque: 103 N–m (1,050 kgf–cm, 76 ft–lbf)

LOWER SUSPENSION ARM

COMPONENTS

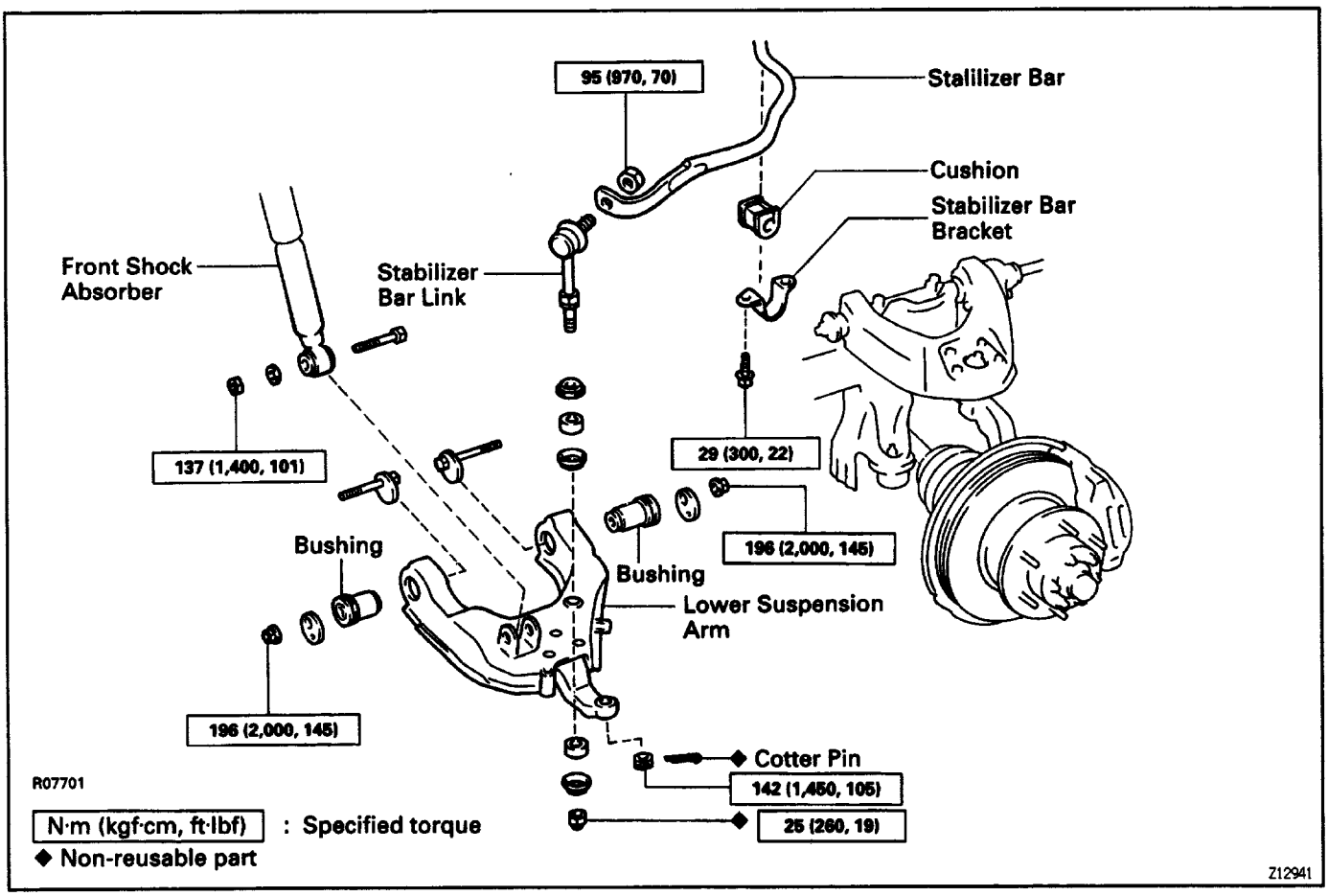

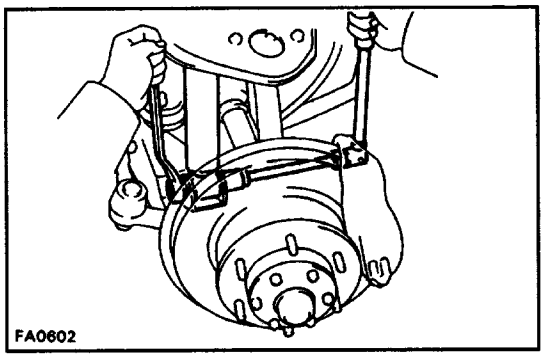

LOWER SUSPENSION ARM REMOVAL

1. JACK UP VEHICLE AND REMOVE FRONT WHEEL

2. DISCONNECT FRONT SHOCK ABSORBER FROM LOWER SUSPENSION ARM

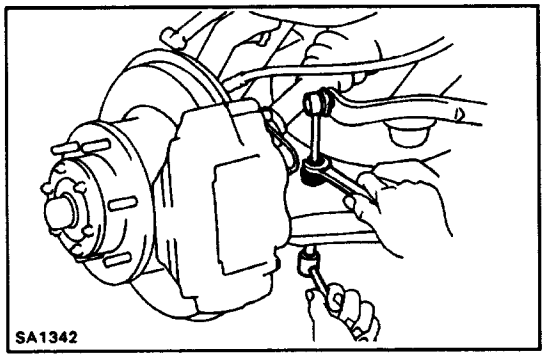

3. DISCONNECT STABILIZER BAR LINK FROM LOWER SUSPENSION ARM

(a) Remove the nut, cushions and retainers and disconnect the stabilizer bar link from the lower suspension arm.

(b) Remove the retainers and cushion from the stabilizer bar link.

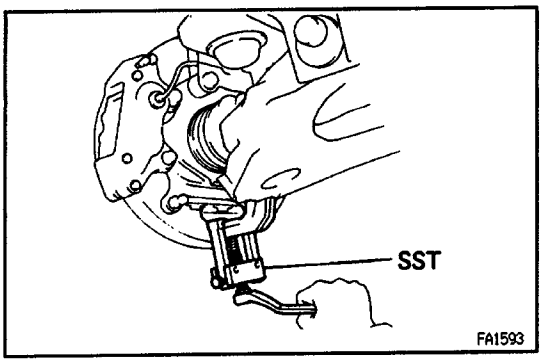

4. DISCONNECT LOWER SUSPENSION ARM FROM LOWER BALL JOINT

(a) Remove the cotter pin and nut.

(b) Using SST, disconnect the lower suspension arm from the lower ball joint.
SST 09628–62011

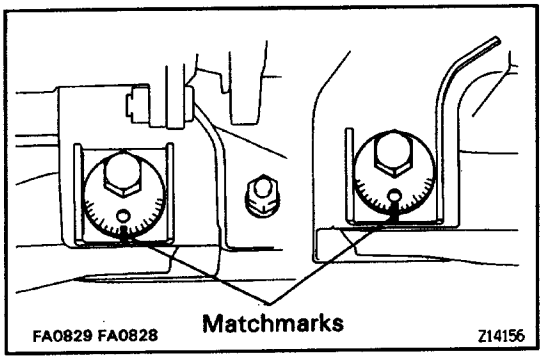

5. REMOVE LOWER SUSPENSION ARM

(a) Place matchmarks on the front and rear adjusting cams.

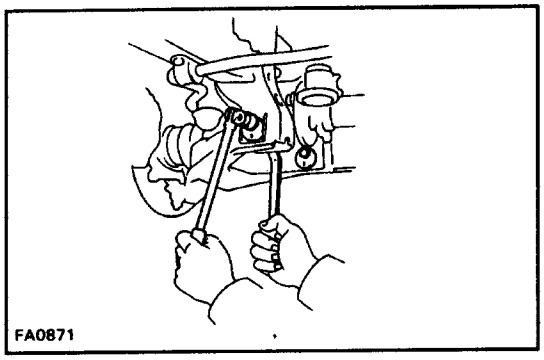

(b) Remove the nuts and adjusting cams, and remove the lower suspension arm.

LOWER SUSPENSION ARM BUSHING REPLACEMENT

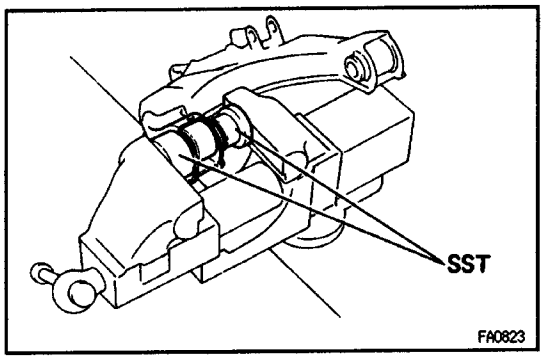

1. REMOVE FRONT AND REAR BUSHINGS

Using SST, press out the bushings from the lower suspension arm.
SST 09726–27011 (09726 –02050, 09726–02060)

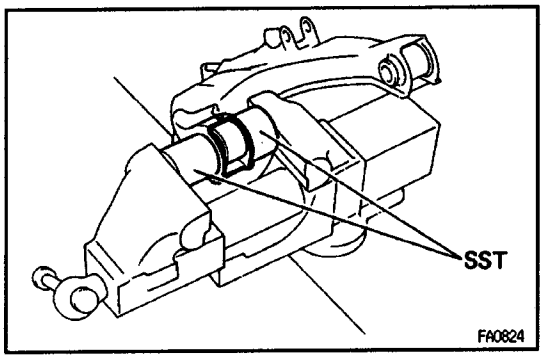

2. INSTALL FRONT AND REAR BUSHINGS

Using SST, press in new bushings to the lower suspension arm.
SST 09726 – 27011 (09726 – 02040, 09726 – 02060)
HINT: Do not apply grease or oil to the bushings.

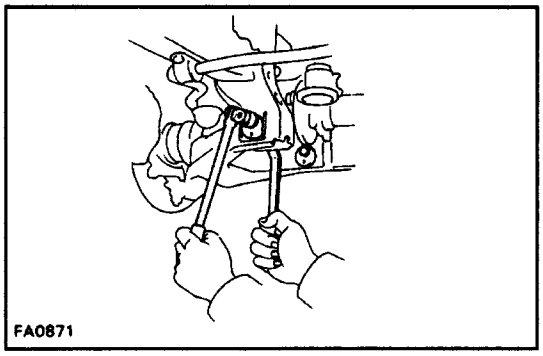

LOWER SUSPENSION ARM INSTALLATION

1. INSTALL LOWER SUSPENSION ARM

(a) Install the lower suspension arm to the frame with the adjusting cams.

(b) Temporarily install the 2 nuts to the front and rear adjusting cams.

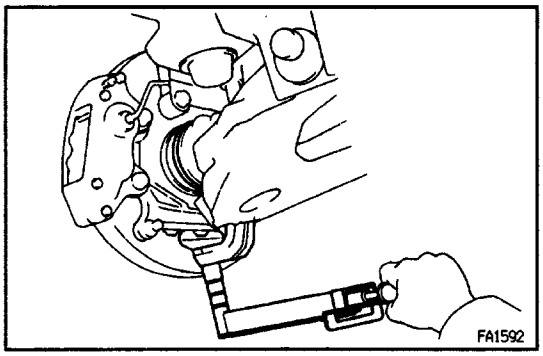

2. CONNECT LOWER SUSPENSION ARM TO LOWER BALL JOINT

(a) Connect the lower suspension arm to the lower ball joint and torque the nut.

Torque: 142 N–m (1,45O kgf–cm. 105 ft–lbf)

(b) Install a new cotter pin.

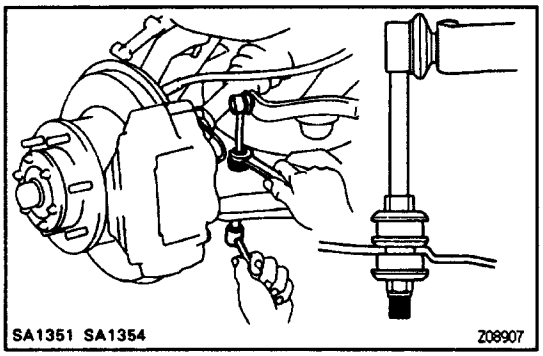

3. CONNECT STABILIZER BAR LINK TO LOWER SUSPENSION ARM

(a) Install the retainers and cushion from the stabilizer bar link.

(b) Connect the stabilizer bar link to the lower suspension arm with the cushion and retainer, as shown in the illustration.

(c) Install and torque a new nut.

Torque: 25 N–m (260 kgf–cm, 19 ft–lbf)

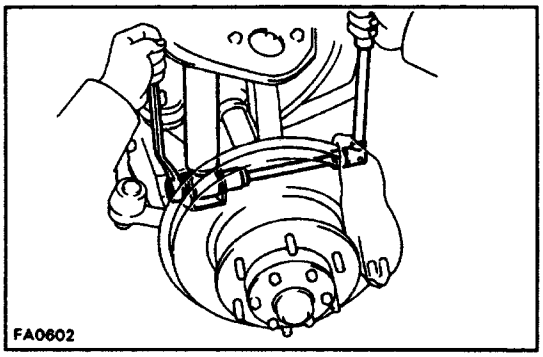

4. CONNECT SHOCK ABSORBER TO LOWER SUSPENSION ARM

Install the bolt, washer and nut, connect the shock absorber to the lower suspension arm bracket.

Torque: 137 N–m (1,400 kgf–cm, 101 ft–lbf)

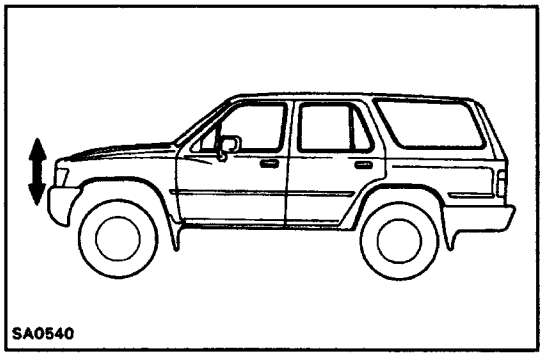

6. TORQUE ADJUSTING CAMS NUTS

(a) Install the wheel, and remove the stands and bounce the vehicle up and down to stabilize the suspension.

Torque: 103 N–m (1,050 kgf–cm, 76 ft–lbf)

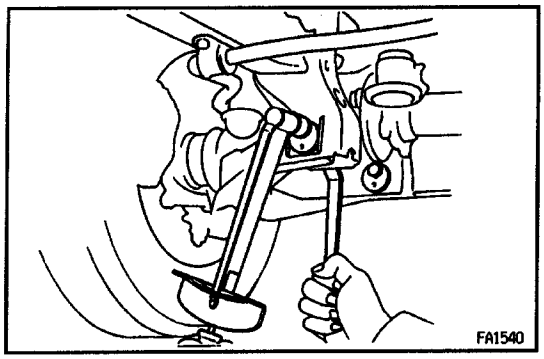

(b) Align the matchmarks and torque the nuts.

Torque: 198 N–m (2,000 kgf–cm. 145 ft–lbf)

6. CHECK FRONT WHEEL ALIGNMENT

(See page SA–4)

PREPARATION

SST (SPECIAL SERVICE TOOLS)

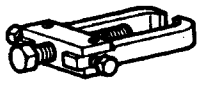	09628–62011 Ball Joint Puller	
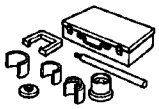	09710–26010 Front Suspension Bushing Tool Set	Upper arm bushing replacement
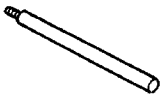	(09710–05020) Handle	
	(09710–05030) Remover	
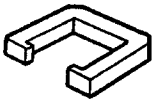	(09710–05040) Gate	
	(09710–05050) Remover	
	(09710–05060) Replacer	
	(09710–05080) Rear Base	
	09726–27011 Front Suspension Arm Bushing Remover & Replacer	Lower arm bushing replacement
	(09726–02040) Replacer	
	(09726–02050) Remover & Replacer	
	(09726–02060) No.2 Base	

RECOMMENDED TOOLS

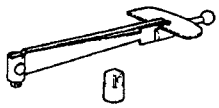	09025–00010 Torque Wrench (30 kgf–cm) .	

EQUIPMENT

Torque wrench	

STABILIZER BAR

COMPONENTS

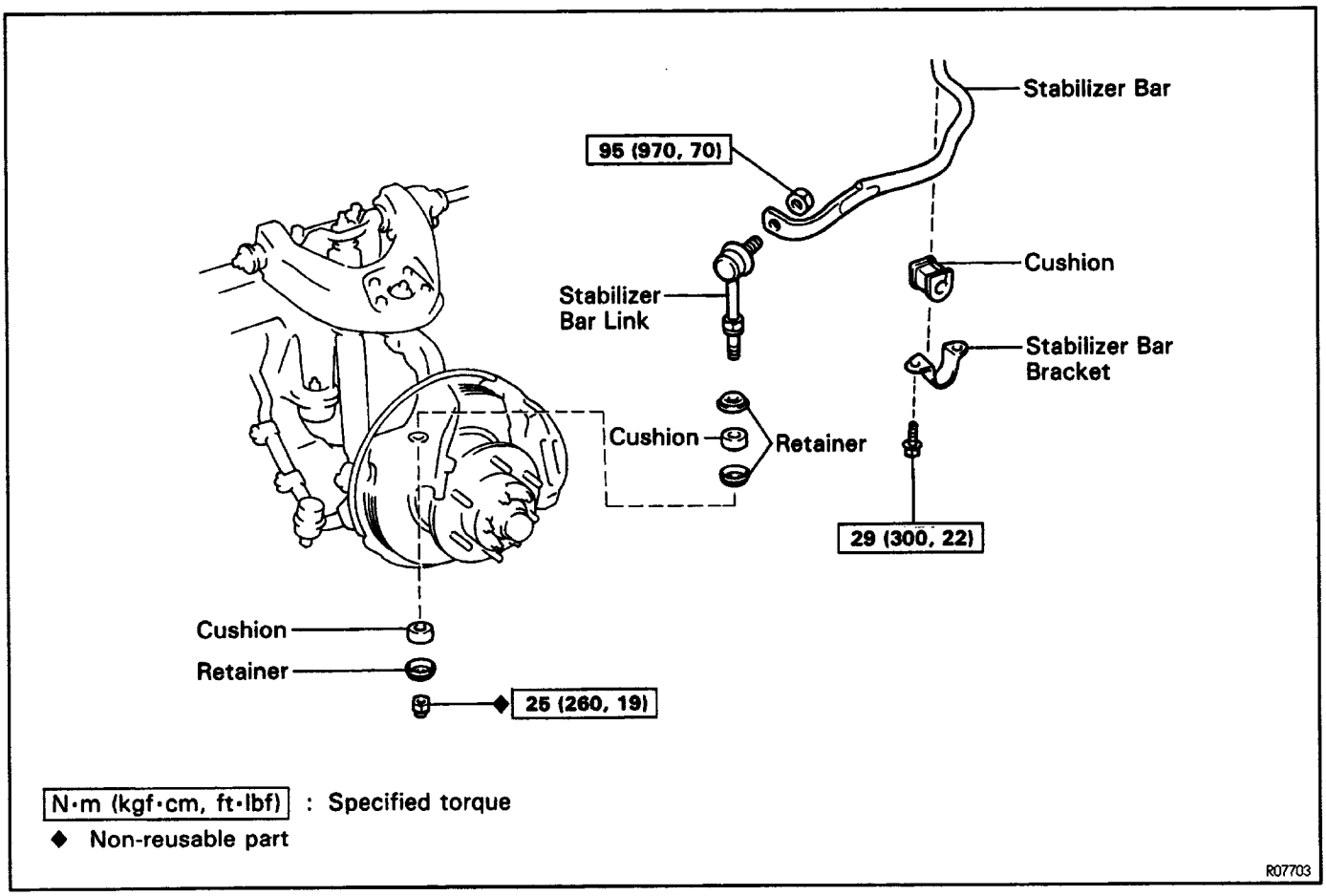

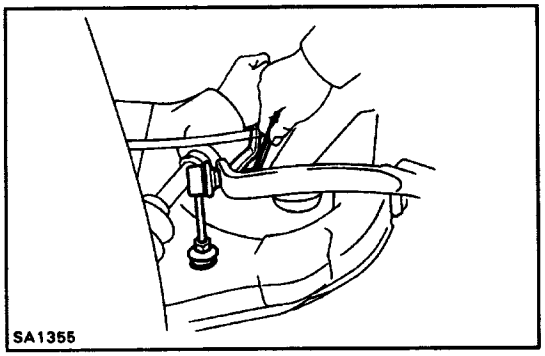

STABILIZER BAR REMOVAL

1. REMOVE BOTH STABILIZER BAR LINKS

(a) Using a hexagon wrench, remove the nuts and disconnect the stabilizer bar from the stabilizer bar links.

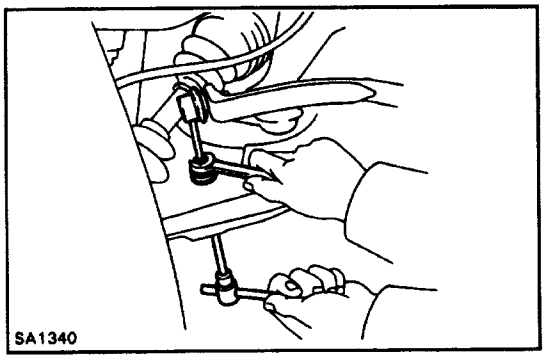

(b) Hold the stabilizer bar link with a wrench, and remove the nuts, retainers, cushions and stabilizer bar links.

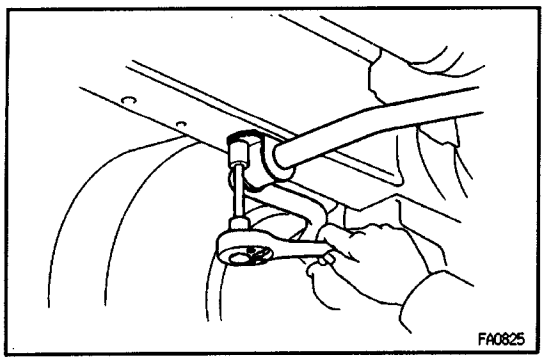

2. REMOVE STABILIZER BAR FROM FRAME

Remove the bolts stabilizer bar with cushions, and brackets.

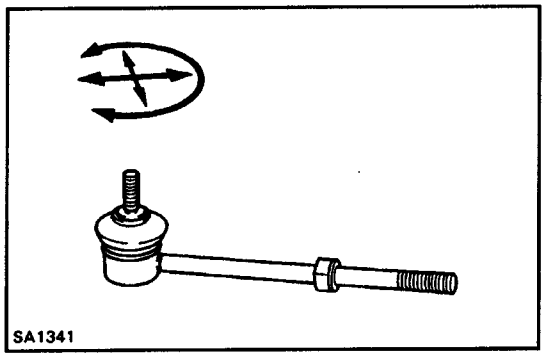

STABILIZER BAR LINK INSPECTION

INSPECT STABILIZER BAR LINK

Rotate the ball joint stud in all directions.

If the movement is not smooth and free, replace the stabilizer bar link.

STABILIZER BAR INSTALLATION

1. INSTALL STABILIZER BAR TO FRAME

Place the stabilizer bar in position and install both stabilizer bar cushions and brackets to the frame.

Torque: 29 N–m (300 kgf–cm, 22 ft–lbf)

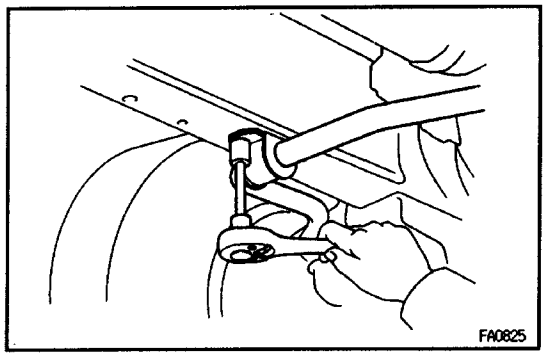

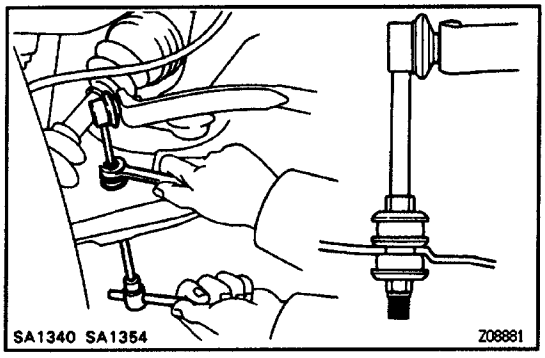

2. INSTALL BOTH STABILIZER BAR LINKS

(a) Hold the stabilizer bar link with a wrench, install the links, retainers and cushions onto the lower suspension arm with cushions, retainer and a new nut.

Torque: 25 N–m (260 kgf/cm, 19 ft–lbf)

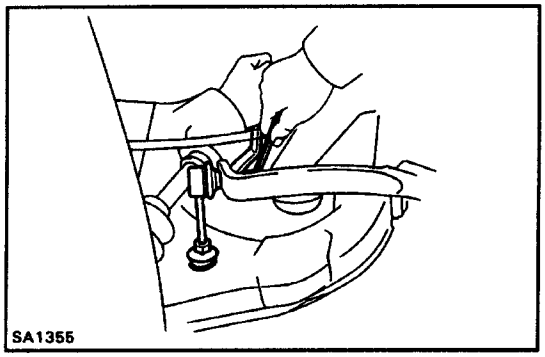

(b) Using a hexagon wrench, connect the stabilizer bar to the links with the new nut.

Torque: 95 N–m (970 kgf–cm, 70 ft–lbf)

TORSION BAR SPRING

COMPONENTS

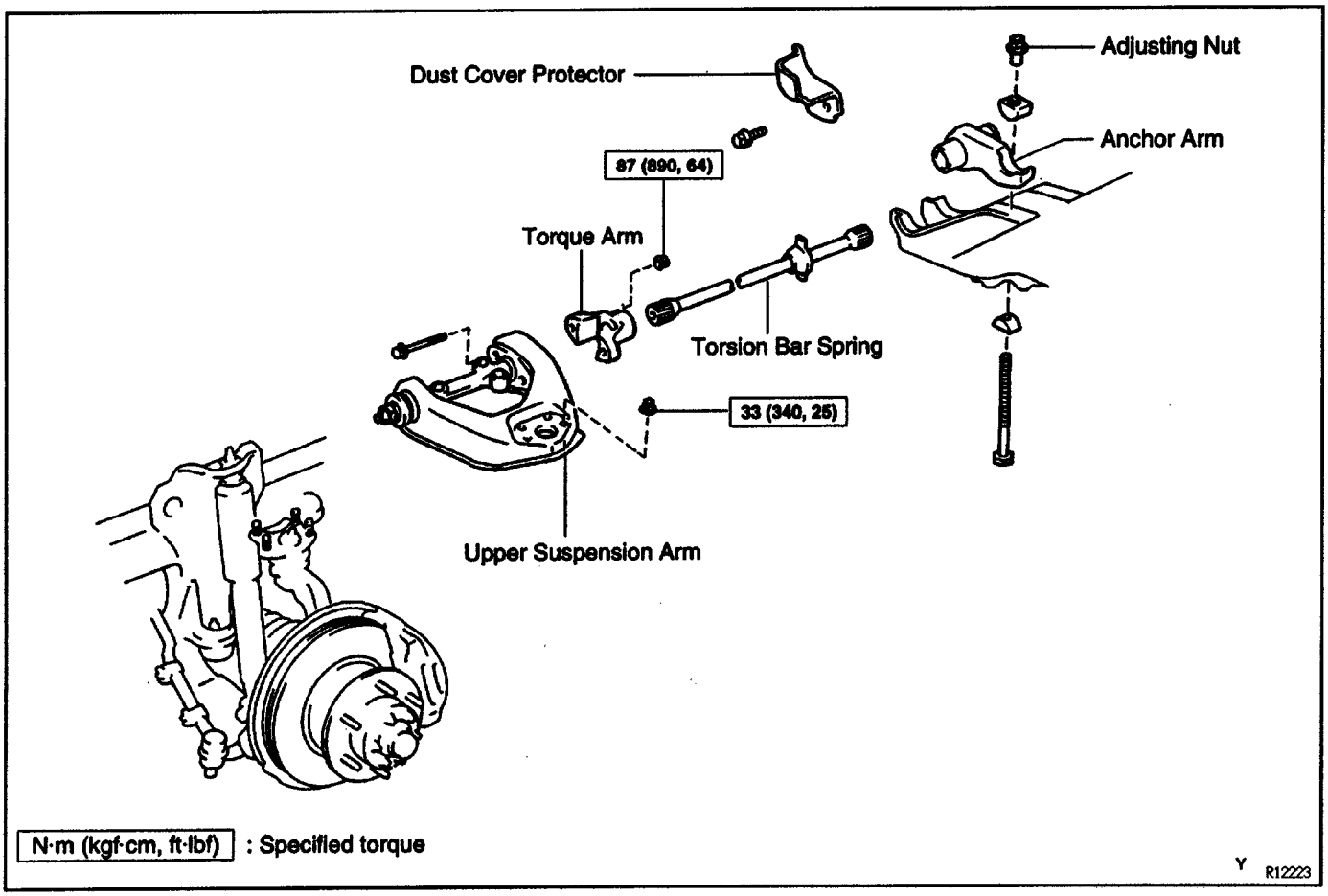

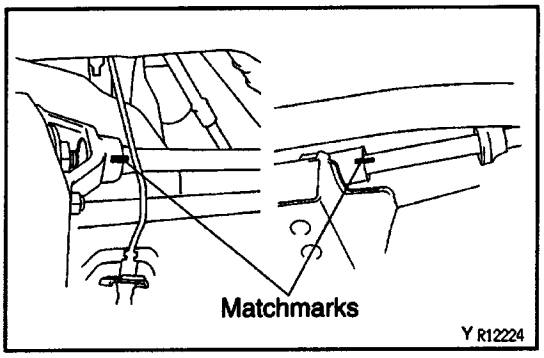

TORSION BAR SPRING REMOVAL

1. JACK UP VEHICLE AND REMOVE FRONT WHEEL

2. REMOVE DUST COVER PROTECTOR

3. PLACE MATCHMARKS ON TORSION BAR SPRING, ANCHOR ARM AND TORQUE ARM

Remove the boots and place matchmarks on the torsion bar spring, anchor arm and torque arm.

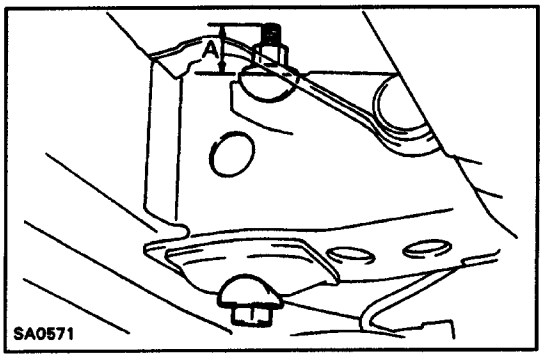

4. MEASURE PROTRUDING BOLT END "A", AS SHOWN

HINT: Use this measurement for reference when adjusting the chassis ground clearance.

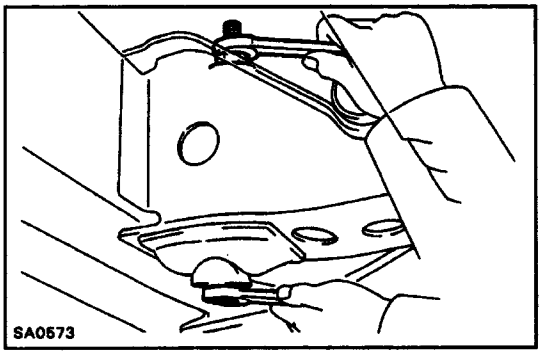

6. LOOSEN ADJUSTING NUT AND REMOVE ANCHOR ARM AND TORSION BAR SPRING

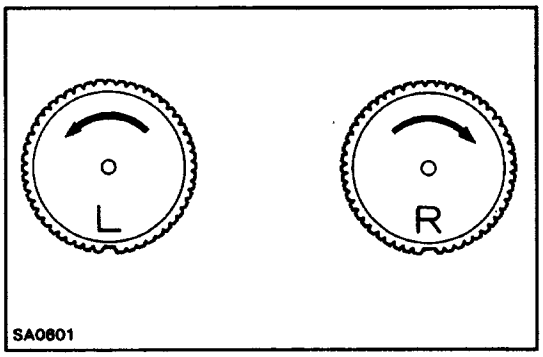

TORSION BAR SPRING INSTALLATION

HINT: There are left and right indication marks on the rear end of the torsion bar springs. Be careful not to interchange them.

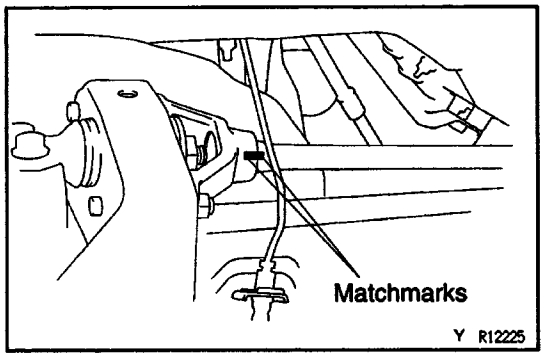

1. INSTALL TORSION BAR SPRING AND ANCHOR ARM

If Reusing Torsion Bar Spring:

(a) Apply a light coat of molybdenum disulphide lithium base grease to the spline of the torsion bar spring.

(b) Align the matchmarks and install the torsion bar spring to the torque arm.

(c) Align the matchmarks and install the anchor arm to the torsion bar spring.

(d) Tighten the adjusting nut to the bolt protrusion length is of before removal.

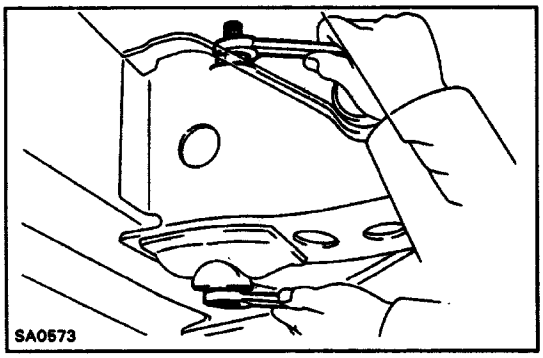

If Using a New Torsion Bar Spring:

(a) Remove the wheel.

(b) Install the 2 boots to the torsion bar spring.

(c) Apply a light coat of molybdenum disulphide lithium base grease to the spline of the torsion bar spring.

(d) Temporarily install the anchor arm to the small end of the torsion bar spring and place the matchmarks on the torsion bar spring and anchor arm.

HINT:

There is 1 spline on the torsion bar spring that is larger than the others. Install the torsion bar spring into the anchor arm by slowly turning the anchor arm until you feel the large spline enter the matching point in the anchor arm.

Place matchmarks on the torsion bar spring and anchor arm on the bottom of each.

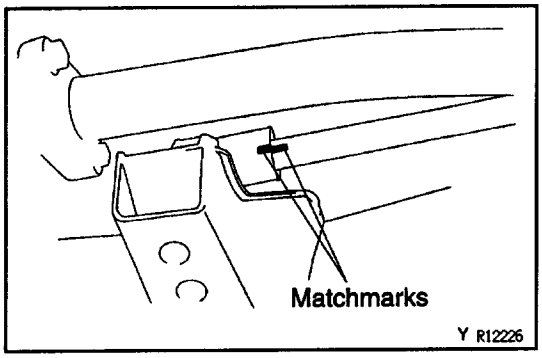

(e) Remove the anchor arm from the torsion bar spring.

(f) Install the torsion bar spring into the torsion arm.

HINT: There is 1 spline on the torsion bar spring that is larger than the others. Install the torsion bar spring into the torque arm by slowly turning the torsion bar spring until you feel the large spline enter the matching point in the torque arm.

(g) Align the matchmarks and install the anchor arm to the torsion bar spring.

(h) Torque the adjusting nut.

Nut tightening limit:

A = 70 mm (2.76 In.)

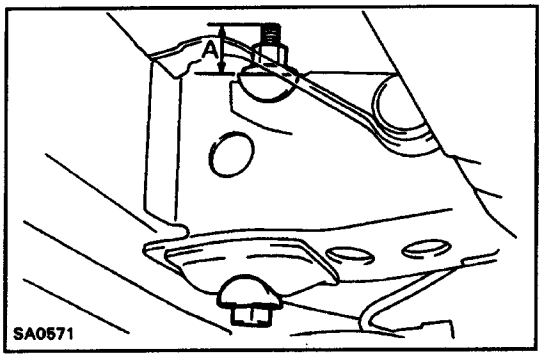

(i) Temporarily install the lock nut.

(j) Install the wheel and remove the stands, bounce the vehicle to settle the suspension.

(k) Adjust the chassis ground clearance by turning the adjusting nuts.

Chassis ground clearance:

(See page SA–179)

2. INSTALL BOOTS

3. INSTALL DUST COVER PROTECTOR

UPPER AND LOWER BALL JOINT
COMPONENTS

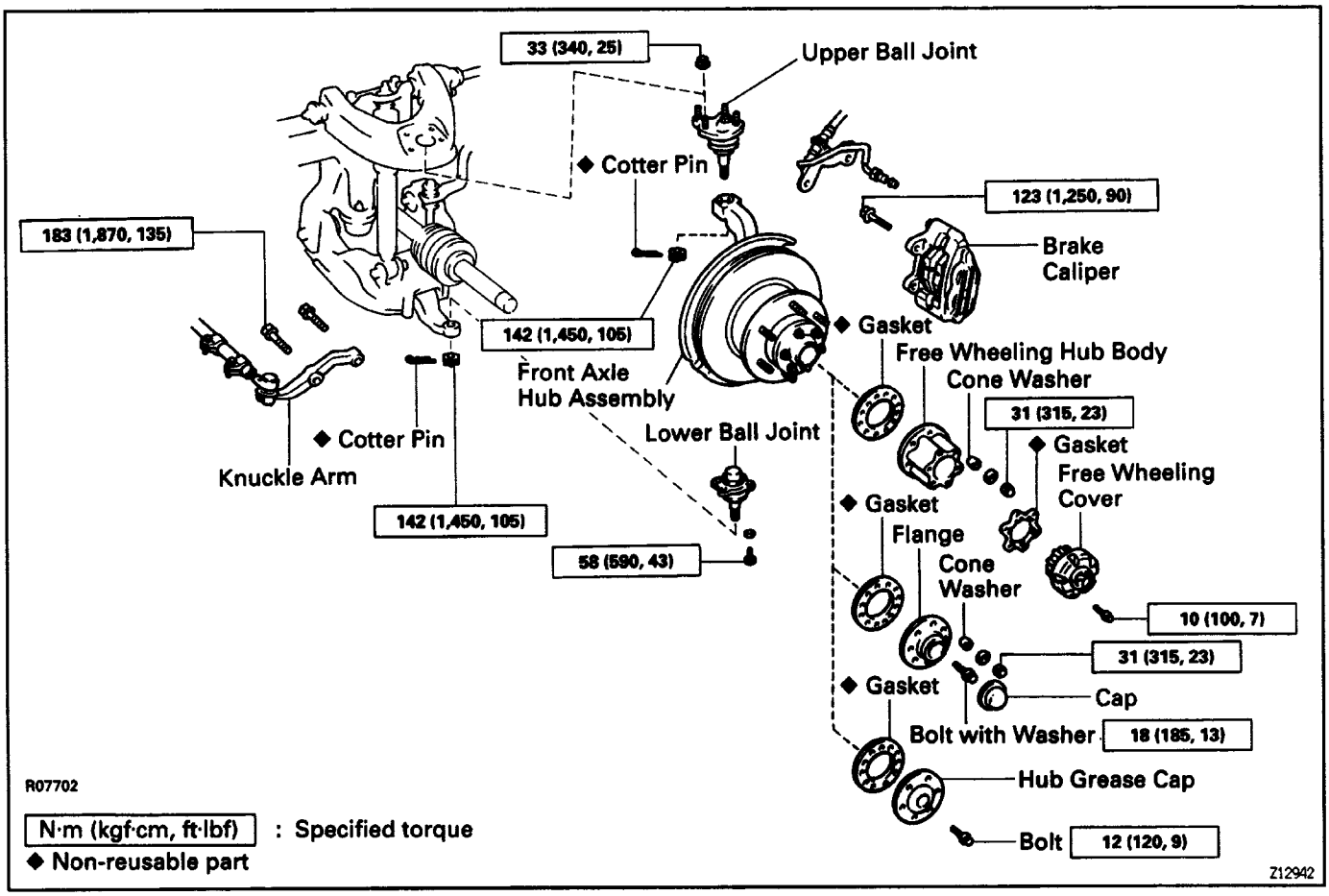

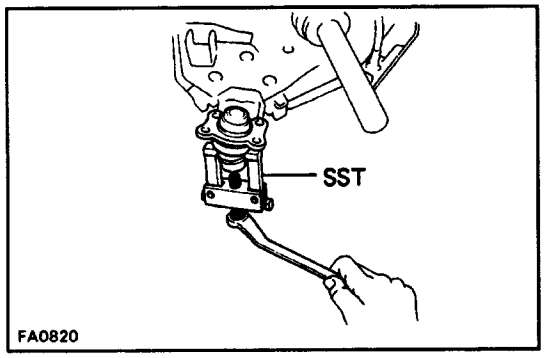

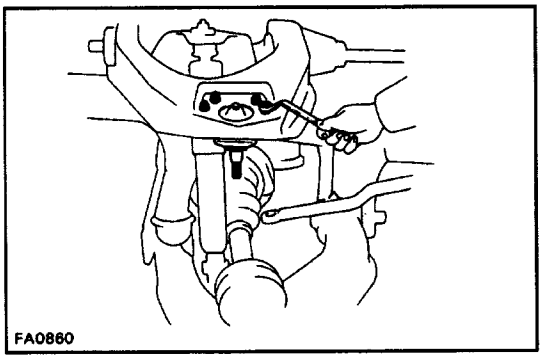

UPPER AND LOWER BALL JOINT REMOVAL

1. JACK UP VEHICLE AND REMOVE FRONT WHEEL

2. REMOVE STEERING KNUCKLE

(See page SA–13)

3. REMOVE LOWER BALL JOINT FROM LOWER SUSPENSION ARM

(a) Remove the cotter pin and nut.

(b) Using SST, remove the lower ball joint from the lower suspension arm.

SST 09628–62011

4. REMOVE UPPER BALL JOINT FROM UPPER SUSPENSION ARM

Remove the 4 nuts and washers.

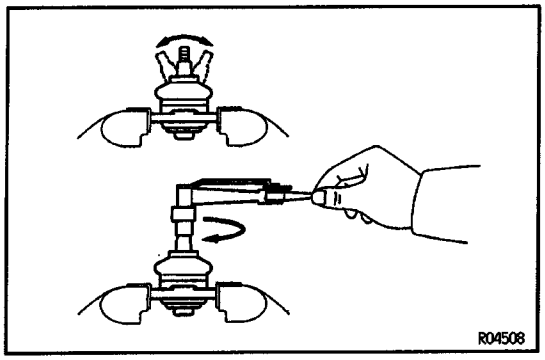

UPPER AND LOWER BALL JOINT INSPECTION

INSPECT BALL JOINTS

(a) As shown in the illustration, flip the ball joint stud back and forth 5 times before installing the nut.

(b) Using a torque gauge, turn the nut continuously 1 turn every 2–4 seconds and take the torque reading on the 5th turn.

Torque (turning):

Lower ball joint:

3.0 – 5.9 N–m (30 – 60 kgf–cm, 26 – 52 in.–lbf)

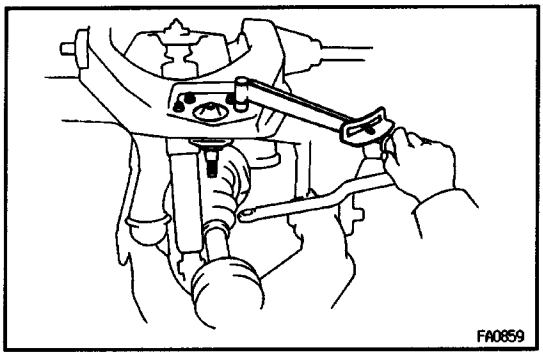

UPPER AND LOWER BALL JOINT INSTALLATION

1. INSTALL UPPER BALL JOINT TO UPPER SUSPENSION ARM

Install the 4 washers and nuts.

Torque: 33 N–m (340 kgf–cm, 26 ft–lbf)

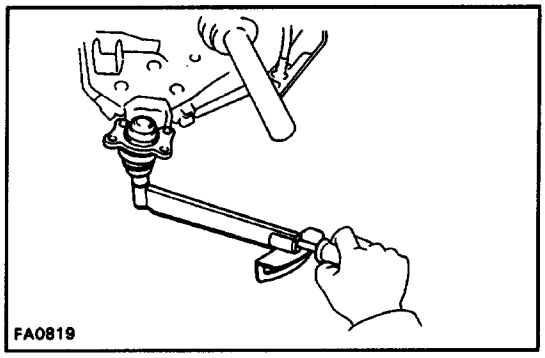

2. INSTALL LOWER BALL JOINT TO LOWER SUSPENSION

(a) Install the lower ball joint to the lower suspension arm.

(b) Torque the nut and install a new cotter pin.

Torque: 142 N–m (1,450 kgf–cm, 105 ft–lbf)

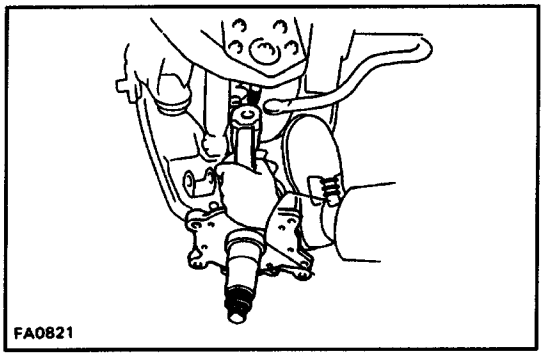

3. INSTALL STEERING KNUCKLE

(See page SA–23)

4. INSTALL FRONT WHEEL AND LOWER VEHICLE

Torque: 103 N–m, (1,050 kgf–cm, 76 ft–lbf)

UPPER SUSPENSION ARM
COMPONENTS

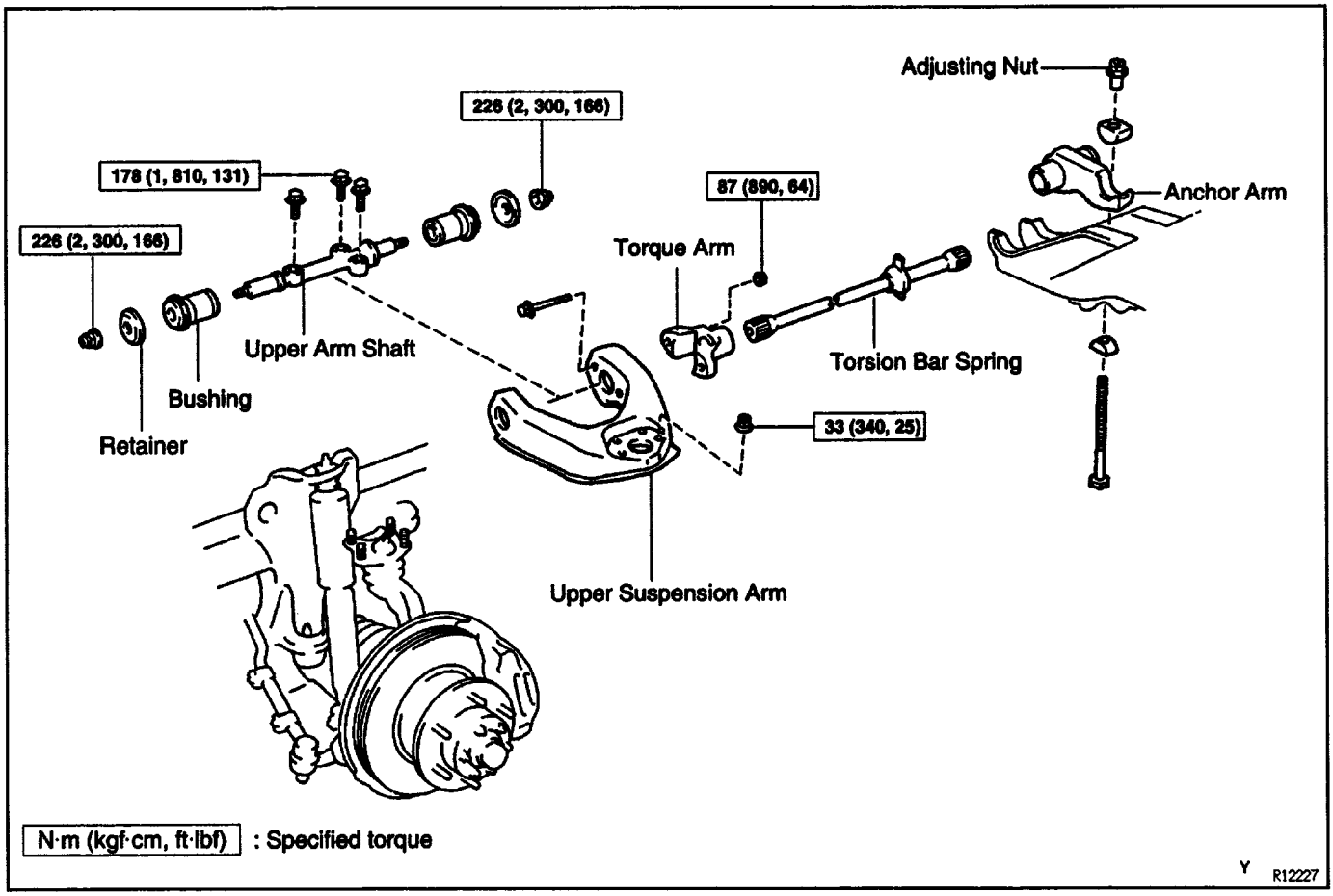

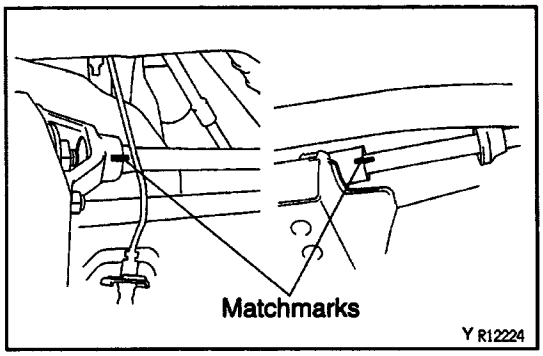

UPPER SUSPENSION ARM REMOVAL

1. JACK UP VEHICLE AND REMOVE FRONT WHEEL

2. REMOVE TORSION BAR SPRING

(See page SA–109)

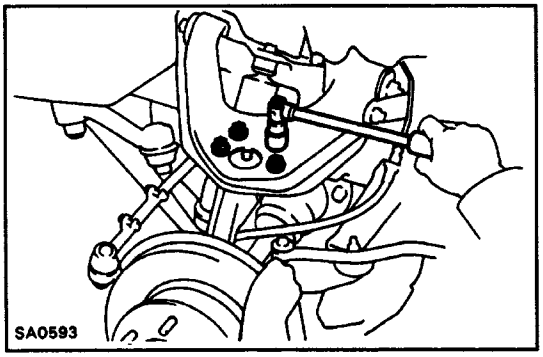

3. REMOVE UPPER BALL JOINT FROM UPPER SUSPENSION ARM

Remove the 4 nuts and disconnect the upper ball joint from the upper suspension arm.

NOTICE: Hold the lower suspension arm with a jack to protect the brake hose.

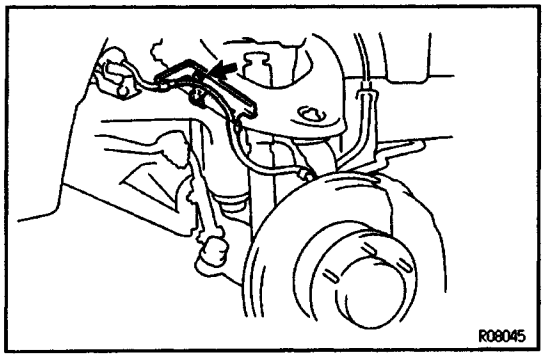

4. w/ 4 WHEEL ABS:

REMOVE FRONT ABS SPEED SENSOR BRACKET FROM UPPER SUSPENSION ARM

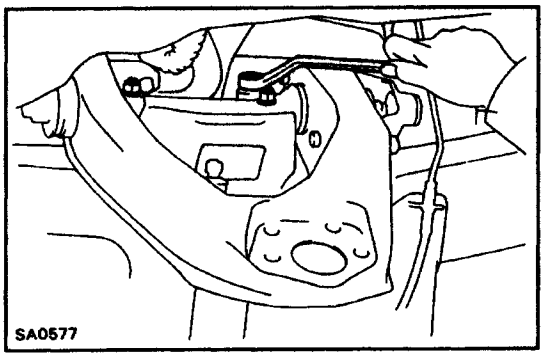

6. REMOVE UPPER SUSPENSION ARM

(a) Disconnect the intermediate shaft from the steering gear housing.

(b) Remove the 3 bolts and remove the upper suspension arm from the frame.

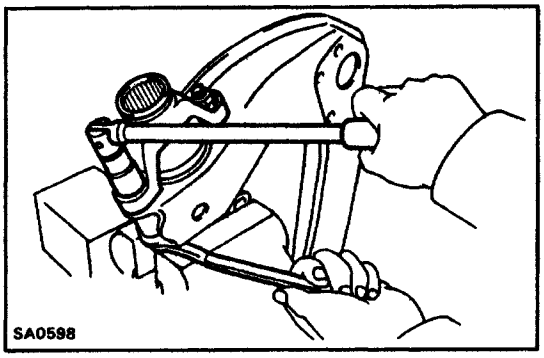

UPPER SUSPENSION ARM BUSHING REPLACEMENT

7. REMOVE TORQUE ARM

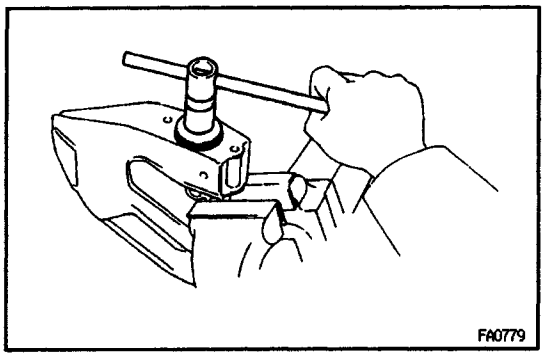

2. REMOVE FRONT BUSHING

(a) Using a chisel and hammer, loosen the staked part of the nut.

(b) Remove the nut.

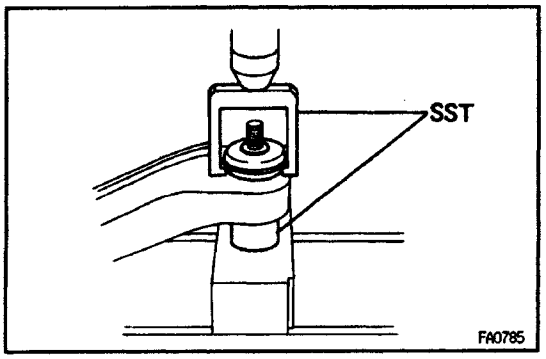

(c) Using SST, push out the front bushing.

SST 09710–26010 (09710–05040, 09710–05050)

3. REMOVE UPPER ARM SHAFT

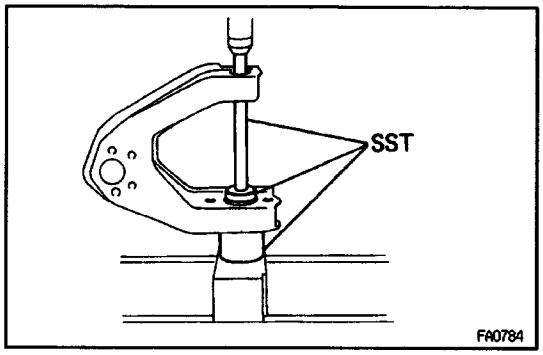

4. REMOVE REAR BUSHING

Using SST and press, push out the rear bushing.
SST 09710–26010 (09710–05020, 09710–05030, 09710–05080)

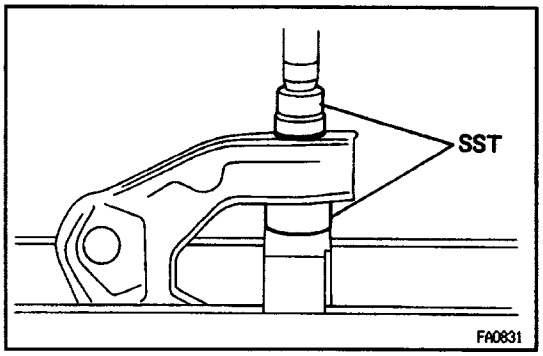

5. INSTALL REAR BUSHING

(a) Using SST and a press, push in a new rear bushing.
SST 09710–26010 (09710–05060, 09710–05080)
HINT: Do not apply grease or oil to the bushings.
(b) Install the upper arm shaft.

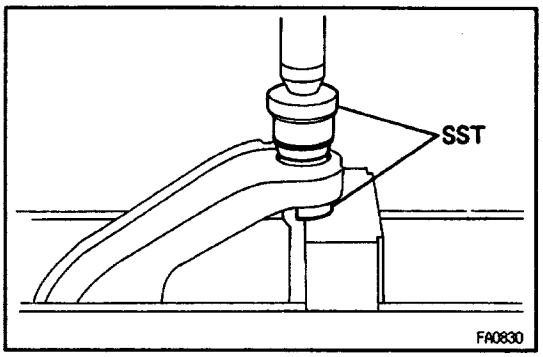

6. INSTALL FRONT BUSHING

Using SST and a press, push in a new front bushing.
SST 09710–26010 (09710–05060, 09710–05080)

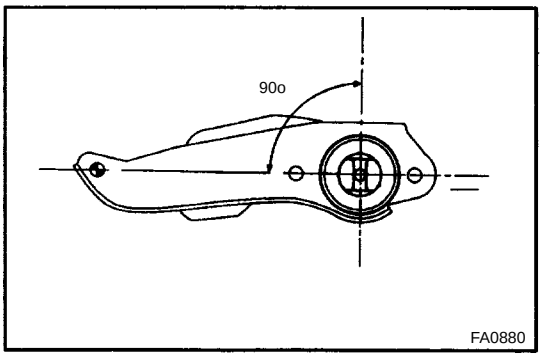

7. TORQUE UPPER ARM SHAFT

(a) Install the retainers and new nuts.
HINT: Position the upper arm shaft so that the frame installation surface is level with the arm.

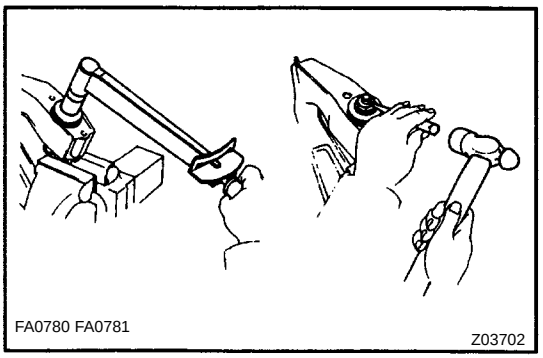

(b) Torque the shaft nuts.
Torque: 226 N–m (2,300 kgf–cm. 166 ft–lbf)
(c) Using a hammer and chisel, stake the nuts.

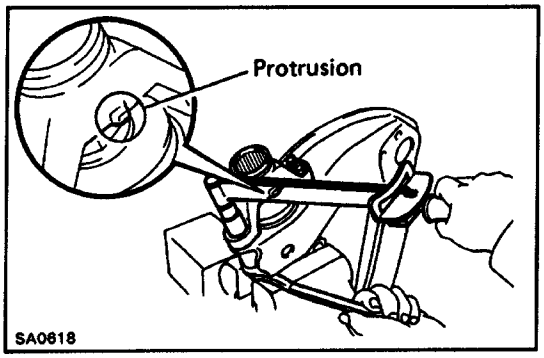

8. INSTALL TORQUE ARM TO UPPER SUSPENSION ARM

Install the torque arm to the upper suspension arm with the protrusion facing upward.

Torque: 87 N–m (890 kgf–cm, 64 ft–lbf)

UPPER SUSPENSION ARM INSTALLATION

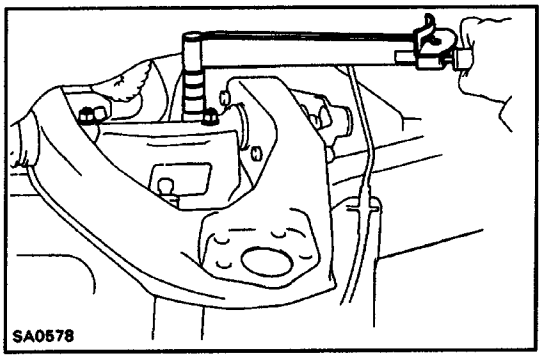

1. INSTALL UPPER SUSPENSION ARM TO FRAME

(a) Install the upper suspension arm to the frame and torque the mounting bolts.

Torque: 178 N–m (1,810 kgf–cm. 131 ft–lbf)

(b) Connect the intermediate shaft to the steering gear housing.

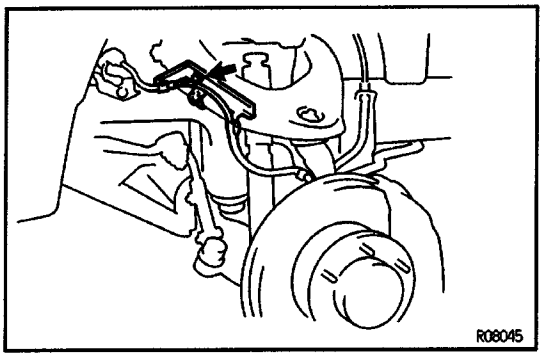

2. w/ 4 WHEEL ABS:

INSTALL FRONT ABS SPEED SENSOR BRACKET TO UPPER SUSPENSION ARM

Torque: 5.4 N–m (65 kgf–cm, 48in.–lbf)

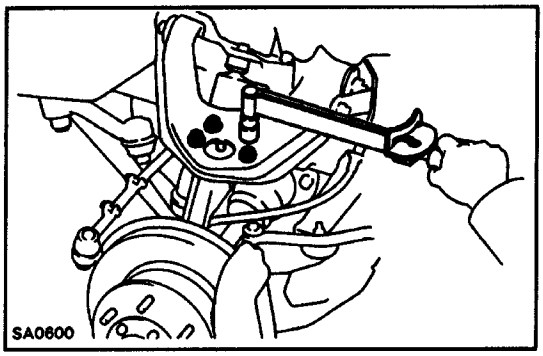

3. CONNECT UPPER BALL JOINT TO UPPER SUSPENSION ARM

Connect the upper ball joint to the upper suspension arm with the 4 nuts.

Torque: 33 N–m (340 kgf–cm, 26 ft–lbf)

4. INSTALL TORSION BAR SPRING

(See page SA–110)

6. INSTALL FRONT WHEEL AND LOWER VEHICLE

Torque: 103 N–m (1,050 kgf–cm, 76 ft–lbf)

6. CHECK FRONT WHEEL ALIGNMENT

(See page SA–4)

GENERAL INSPECTION

1. INSPECT TIRE

(a) Check the tires for wear and for the proper inflation.
Cold tire inflation pressure

Tire size	Front	Rear
P225/75R15 31X10.5R 15LT	180 kPa (1.8 kgf/cm², 26 psi)	200 kPa (2.0 kgf/cm², 29 psi)

(b) Check the tire runout.

Tire runout:

Less then 3.0 mm (0.118 in.)

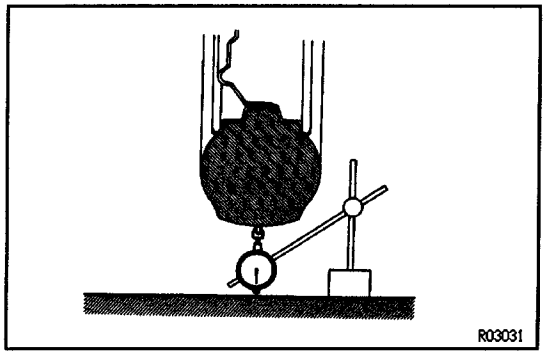

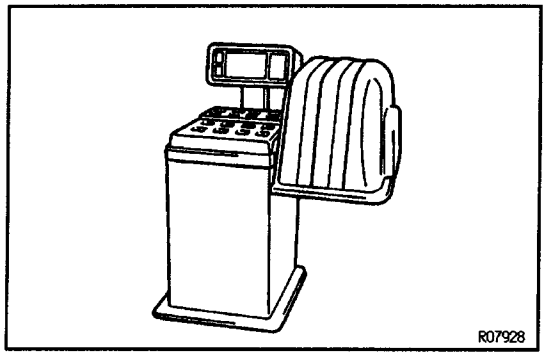

2. INSPECT WHEEL BALANCE

(a) Check and adjust the Off–the–car balance.

(b) If necessary, check and adjust the On–the–car balance.

Unbalance after adjustment:

15.0 g (0.033 lb) or less

3. CHECK WHEEL BEARING LOOSENESS

4. CHECK FRONT SUSPENSION FOR LOOSENESS

5. CHECK STEERING LINKAGE FOR LOOSENESS

8. CHECK BALL JOINT FOR LOOSENESS

7. CHECK SHOCK ABSORBER WORKS PROPERLY

Check for oil leak

Check mounting bushings for wear

Bounce front and rear of the vehicle

REAR AXLE

DESCRIPTION

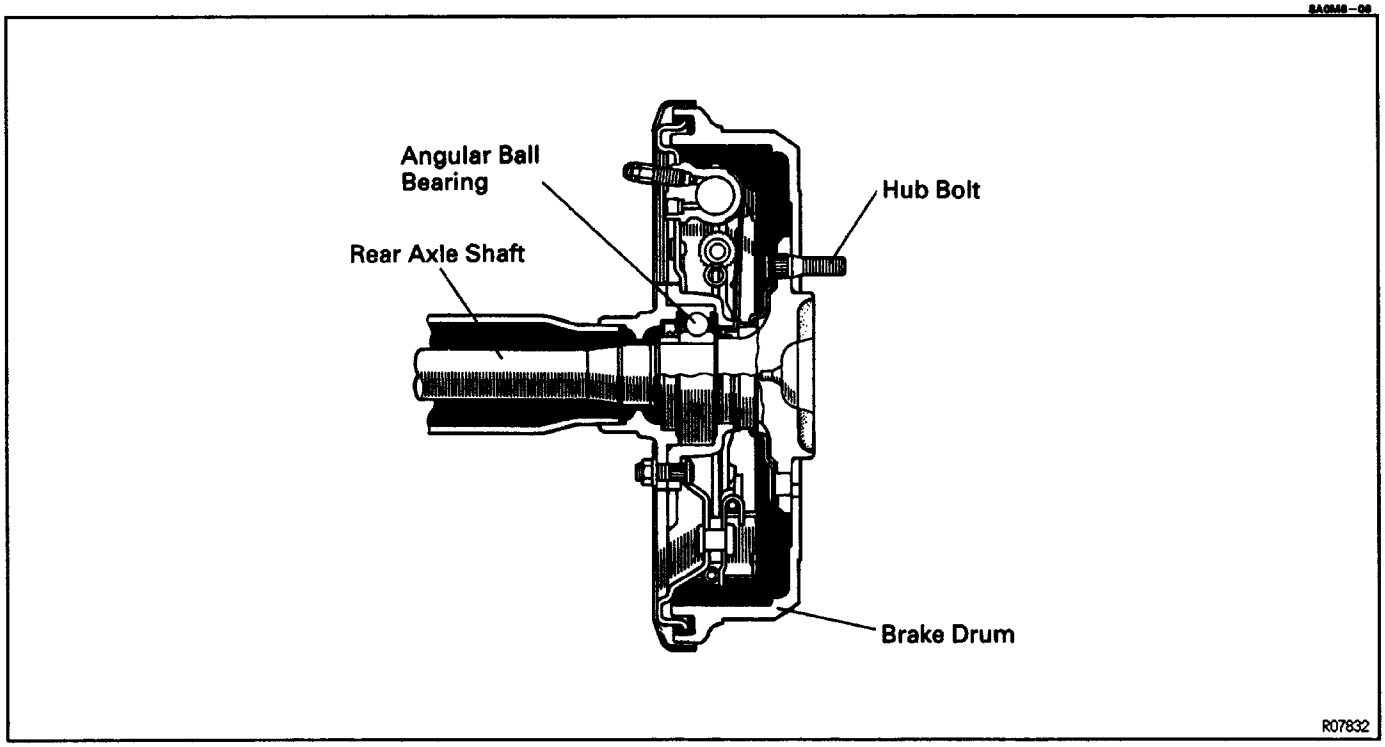

PREPARATION

SST (SPECIAL SERVICE TOOLS)

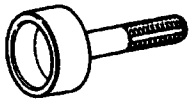	09223–56010 Crankshaft Rear Oil Seal Replacer	Rear axle bearing removal
	09308–00010 Oil Seal Puller	Oil seal removal
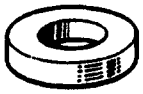	09515–21010 Rear Axle Shaft Bearing Replacer	
	09515–30010 Rear Wheel Bearing Replacer	
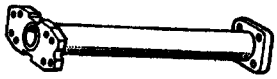	09521–25011 Rear Axle Shaft Puller	For remove and install the rear axle shaft from the backing plate
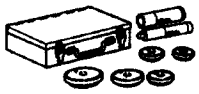	09608–30012 Front Hub & Drive Pinion Bearing Tool Set	Oil seal installation
	(09608–04020) Handle	
	(09608–04070) Front Hub Inner Bearing Cup Replacer	
	(09608–04100) Drive Pinion Front Bearing Cup Replacer	
	09608–35014 Axle Hub & Drive Pinion Bearing Tool Set	
	(09608–06100) Front Hub Outer Bearing Replacer	Rear axle bearing removal
	(09608–06180) Drive Pinion Rear Bearing Cup Replacer	Rear axle bearing installation
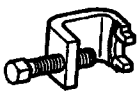	09650–17011 Hub Bolt Remover	

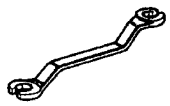	09751–36011 Brake Line Union Nut 10 x 12 mm Wrench	

RECOMMENDED TOOLS

	09905–00012 Snap Ring No.1 Expander.	

EQUIPMENT

Dial indicator	
Torque wrench	

REAR AXLE SHAFT

COMPONENTS

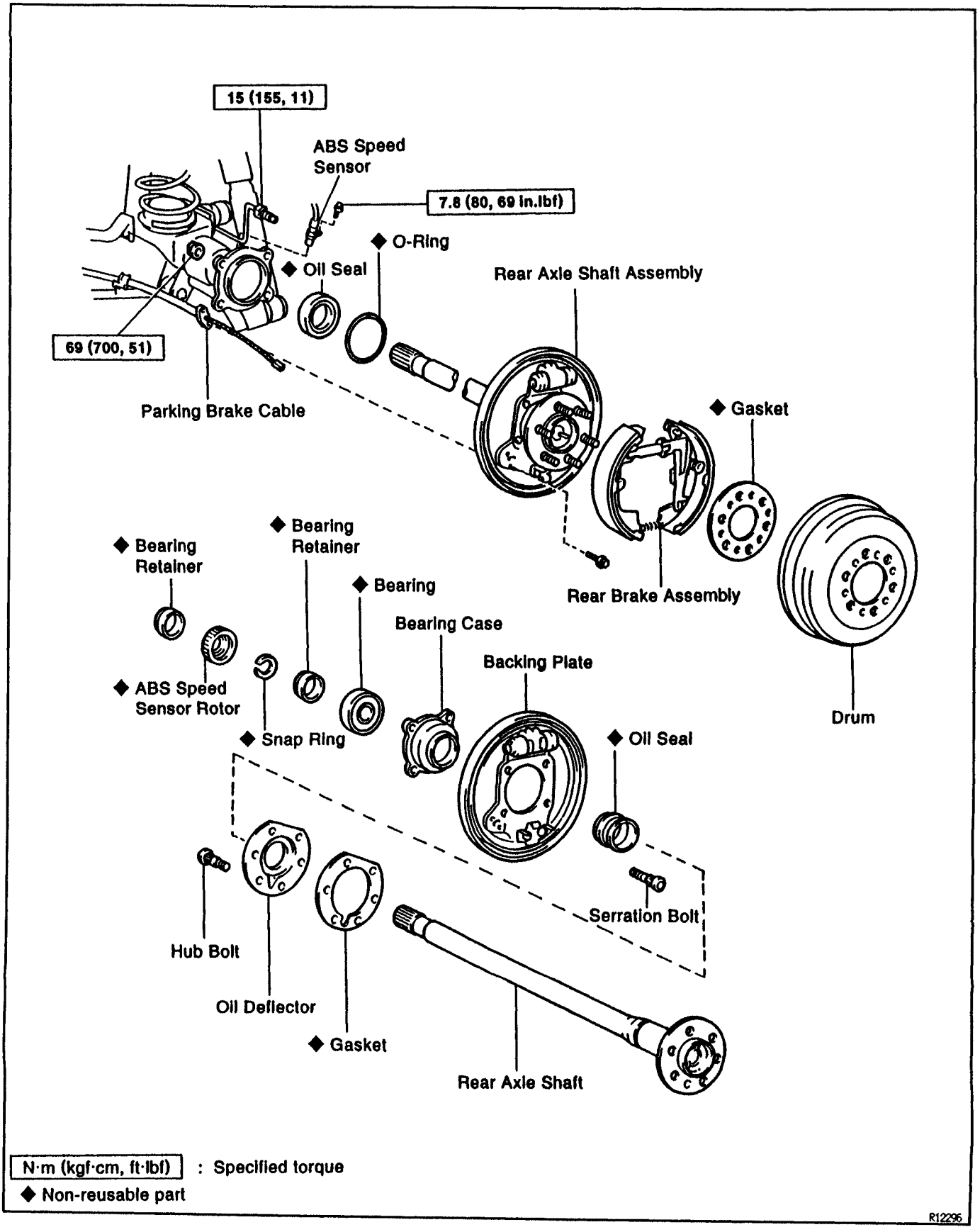

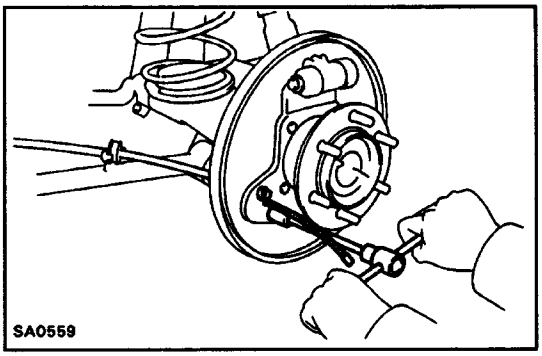

REAR AXLE SHAFT REMOVAL

1. JACK UP AND SUPPORT VEHICLE

2. REMOVE REAR WHEEL AND BRAKE DRUM

3. REMOVE REAR BRAKE ASSEMBLY

(See page BR–26**)**

4. DISCONNECT PARKING BRAKE CABLE

Remove the 2 bolts and disconnect the parking brake cable from the backing plate.

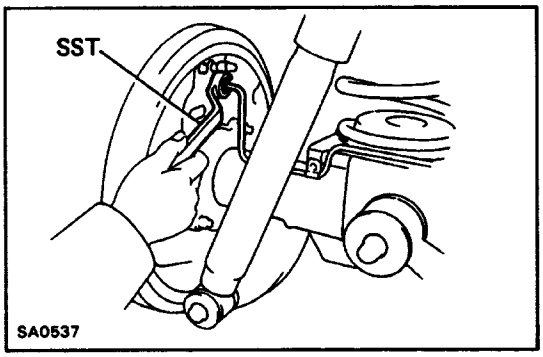

5. w/ 4 WHEEL ABS:

DISCONNECT ABS SPEED SENSOR FROM REAR AXLE HOUSING

6. DISCONNECT BRAKE LINE

Using SST, disconnect the brake line from the backing plate.

SST 09751– 36011

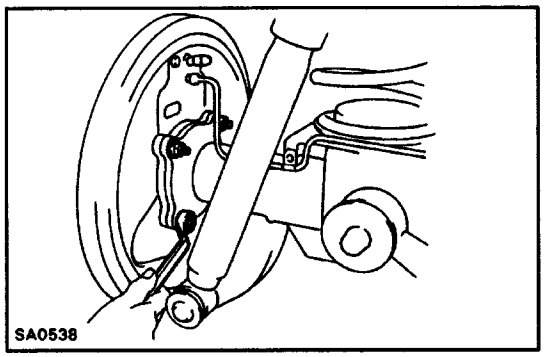

7. REMOVE REAR AXLE SHAFT ASSEMBLY

(a) Remove the 4 backing plate mounting nuts.

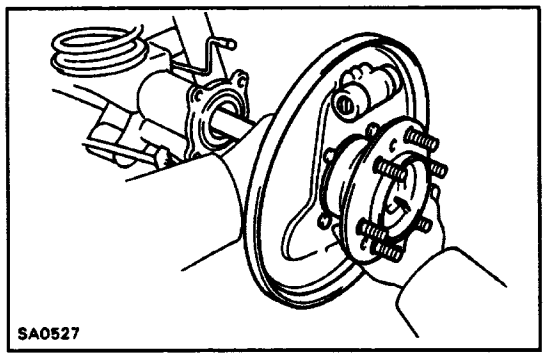

(b) Pull out the rear axle shaft assembly from the rear axle housing.

NOTICE: Be careful not to damage the oil seal.

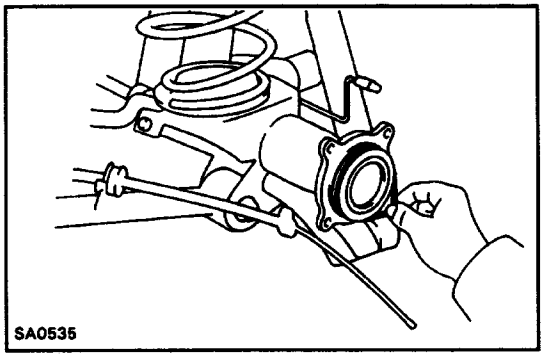

8. REMOVE O–RING FROM REAR AXLE HOUSING

REAR AXLE DISASSEMBLY

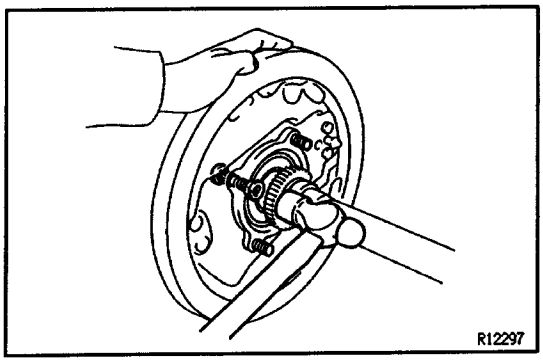

1. w/ 4 WHEEL ABS:

REMOVE BEARING RETAINER (DIFFERENTIAL SIDE) AND ABS SPEED SENSOR ROTOR

(a) Attach a 4 nuts to the 4 serration bolts and remove the serration bolts from the backing plate using a hammer.

NOTICE: Do not reuse the nuts previously removed from the vehicle.

(b) Grind the retainer and sensor rotor surfaces using a grinder, then chisel them out with a chisel.

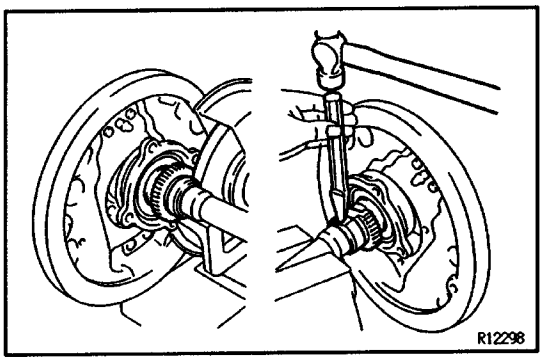

2. REMOVE SNAP RING FROM AXLE SHAFT

Using a snap ring expander, remove the snap ring.

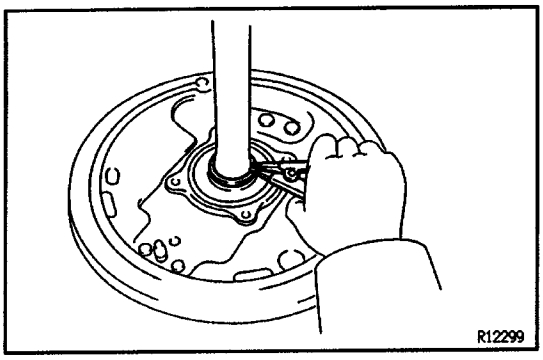

3. REMOVE REAR AXLE SHAFT FROM BACKING PLATE

(a) Attach a washers and nut to the 4 serration bolts, then torque the nuts to install the serration bolts to the backing plate.

SST 09521– 25011

(b) Remove the 4 nuts from the 4 serration bolts.

(c) Position SST on the backing plate with 4 nuts.

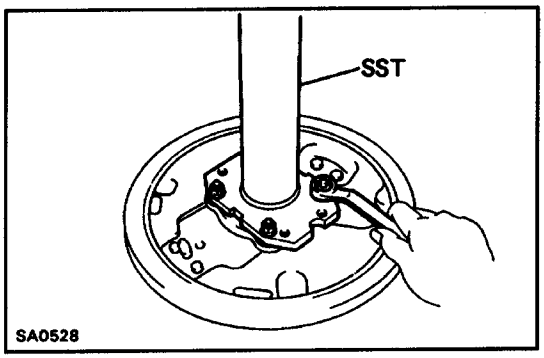

(d) Using a press, press out the rear axle shaft with bearing retainer from the backing plate.

(e) Remove the SST.

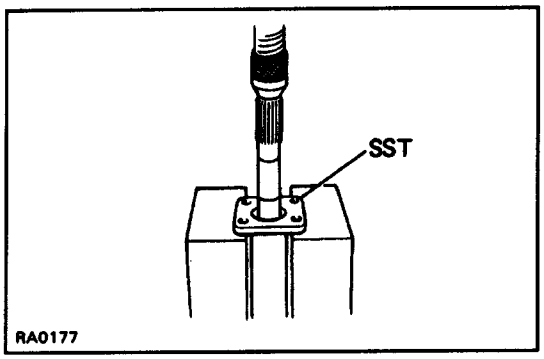

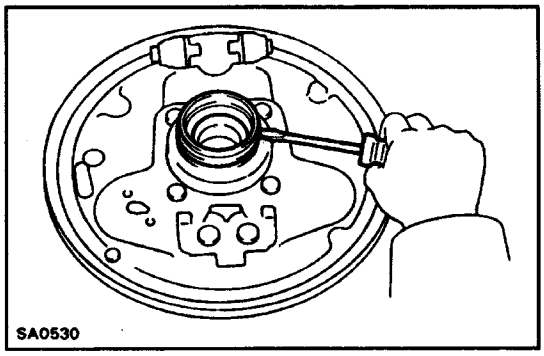

4. REMOVE OUTER OIL SEAL

Using a screwdriver, remove the oil seal.

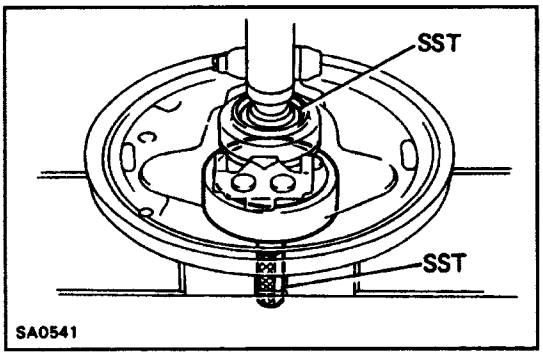

6. REMOVE REAR AXLE SHAFT BEARING

Using SST and a press, press out the bearing from the backing plate.

SST 09223–56010, 09608–35014 (09608–06100)

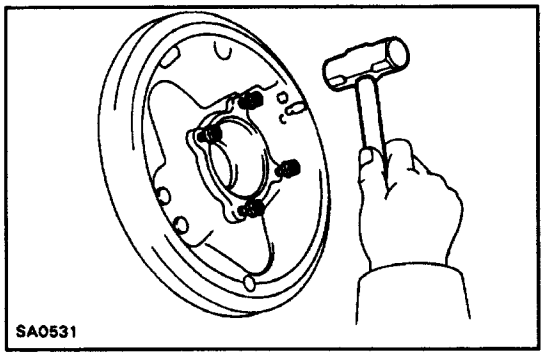

6. REMOVE BEARING CASE

(a) Install the nuts to the serration bolts.

NOTICE: Do not reuse the nuts previously removed from the vehicle.

(b) Using a hammer, tap out the serration bolts and remove the bearing case.

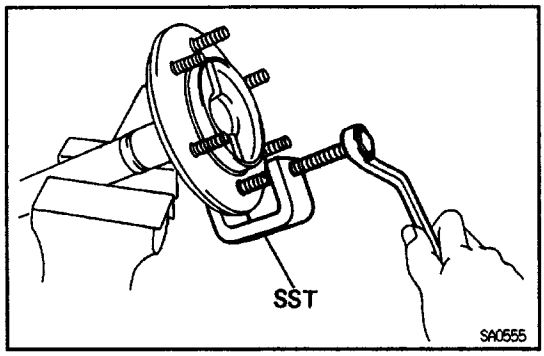

7. REMOVE HUB BOLT AND OIL DEFLECTOR

Using SST, remove the hub bolts, oil deflector and gasket.

SST 09650 –1701 1

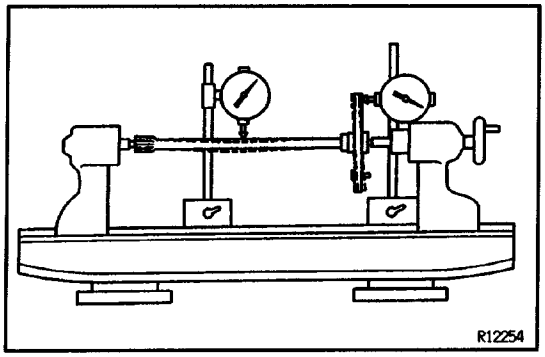

REAR AXLE SHAFT INSPECTION

INSPECT REAR AXLE SHAFT AND FLANGE FOR WEAR, DAMAGE OR RUNOUT

Maximum shaft runout:

2.0mm (0.079 in.)

Maximum flange runout:

0.2mm (0.008 in.)

If the rear axle shaft or flange is damaged or worn, or if runout is greater than the maximum, replace the rear axle shaft.

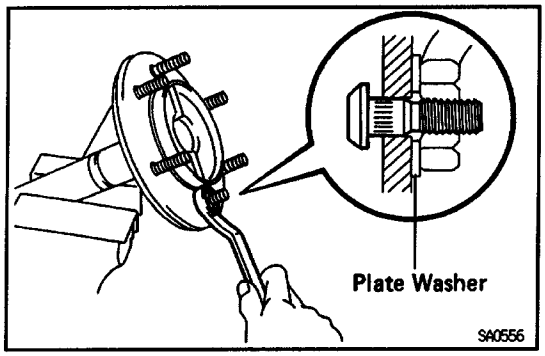

REAR AXLE SHAFT ASSEMBLY

1. INSTALL OIL DEFLECTOR

(a) Install a new gasket and the oil deflector.

(b) Install the plate washer on the hub bolt, as shown in the illustration, then tighten the nut to install the hub bolt.

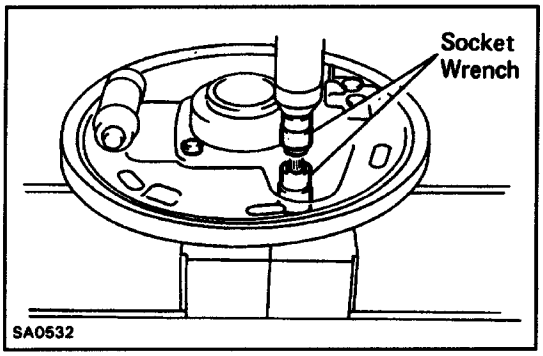

2. INSTALL BEARING CASE

Position the backing plate on the bearing case and, using 2 socket wrenches and a press, press in the serration bolts.

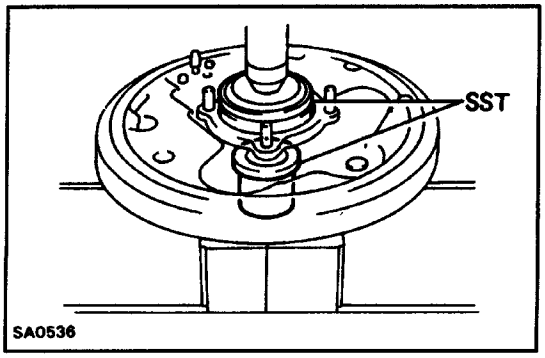

3. INSTALL REAR AXLE SHAFT BEARING

(a) Using SST and a press, press in a new bearing to the backing plate.

SST 09515–30010, 09608–35014 (09608–06180)

(b) Using a press, press in the hub bolts to the backing plate.

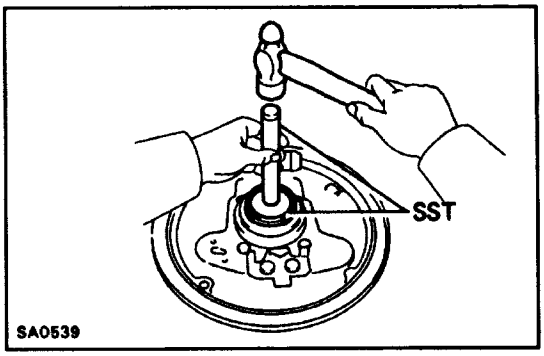

4. INSTALL NEW OUTER OIL SEAL

(a) Using SST and a hammer, tap in a new outer oil seal to the backing plate.
SST 08608–30012 (09608–04020,09608–04070)

(b) Apply the MP grease to the oil seal lip.

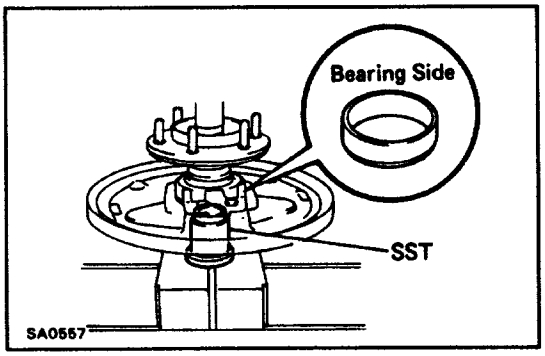

6. INSTALL REAR AXLE SHAFT TO BACKING PLATE

(a) Install the rear axle shaft and a new bearing retainer to the backing plate.

(b) Using SST and a press, press in the rear axle shaft.
SST 09515–30010

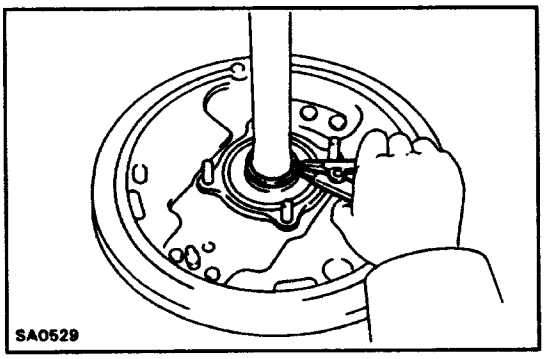

6. INSTALL SNAP RING TO REAR AXLE SHAFT

Using a snap ring expander, install a new snap ring.

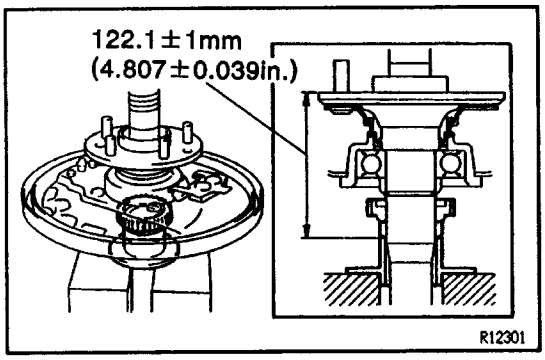

7. w/ 4 WHEEL ABS:

INSTALL ABS SPEED SENSOR ROTOR AND BEARING RETAINER (DIFFERENTIAL SIDE)

Using SST and a press, press in a new sensor rotor and a new bearing retainer to the axle shaft.
SST 09515–21010

Standard length:

122.2 ±1 mm (4.811 ± 0.039 in.)

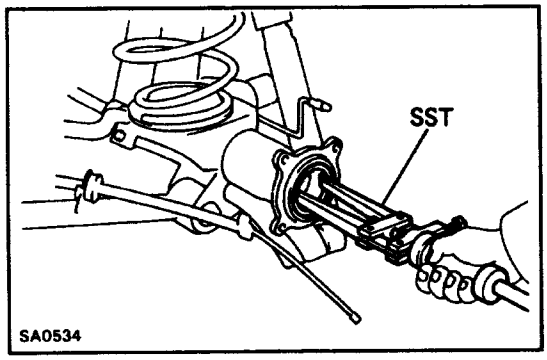

REAR AXLE SHAFT INSTALLATION

1. IF NECESSARY, REPLACE INNER OIL SEAL

(a) Using SST, remove the oil seal from the rear axle housing.
SST 09308 – 00010

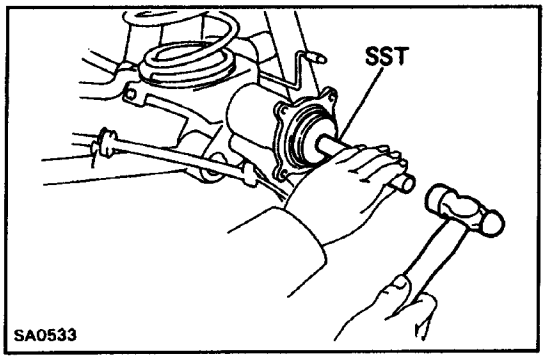

(b) Using SST and a hammer, tap in a new oil seal.
SST 09608–30012 (09608 –04020, 09608–04100)
(c) Apply MP grease to the oil seal lip.

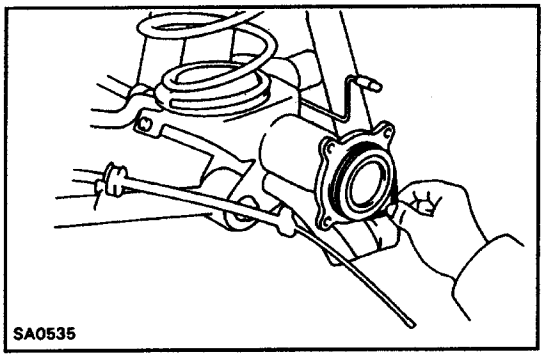

2. INSTALL NEW O–RING TO REAR AXLE HOUSING
(a) Apply MP grease to a now O–ring.
(b) Install the O–ring to the axle housing.

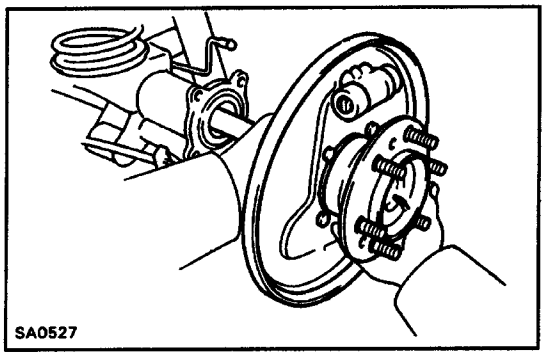

3. INSTALL REAR AXLE SHAFT ASSEMBLY TO REAR AXLE HOUSING
(a) Install the axle shaft assembly to the axle housing.
NOTICE: Be careful not to damage, the oil seal.

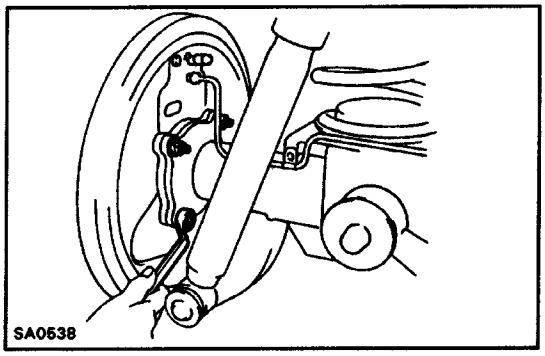

(b) Torque the 4 backing plate mounting nuts.
Torque: 69 N–m (700 kgf–cm, 51 ft–lbf)

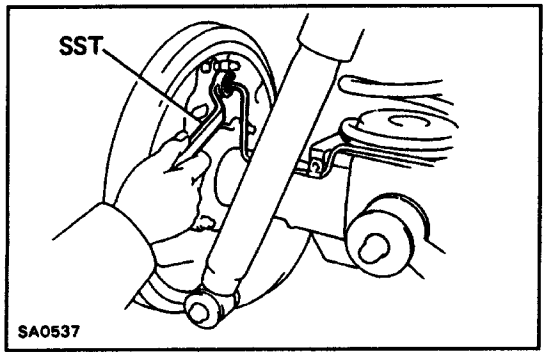

4. w/ 4 WHEEL ABS:
CONNECT ABS SPEED SENSOR TO REAR AXLE HOUSING
Torque: 7.8 N–m (80 kgf–cm, 69 in.–lbf)

5. CONNECT BRAKE LINE
Using SST, connect the brake line.
SST 09751– 36011
Torque: 15 N–m (155 kgf–cm, 11 ft–lbf)

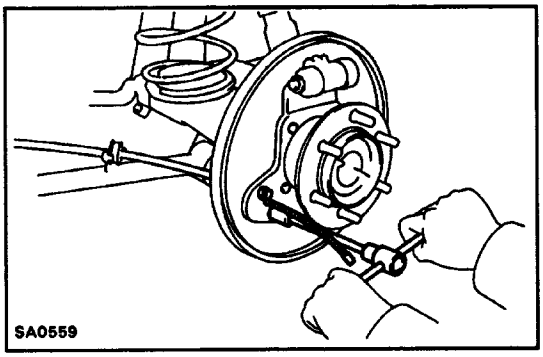

6. CONNECT PARKING BRAKE CABLE

Connect the parking brake cable to the backing plate with the 2 bolts.

7. INSTALL REAR BRAKE ASSEMBLY

(See page BR–29)

8. INSTALL BRAKE DRUM AND REAR WHEEL

Torque: 103 N–m (1,050 kgf–cm, 76 ft–lbf)

9. BLEED BRAKE SYSTEM

(See page BR–8)

10. w/ WHEEL ABS:

CHECK ABS SPEED SENSOR SIGNAL

(See page BR–86)

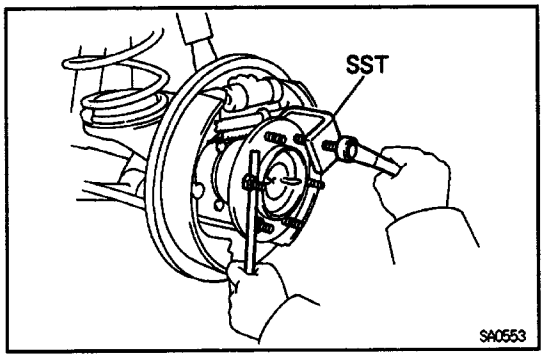

REAR HUB BOLT REPLACEMENT

1. JACK UP AND SUPPORT VEHICLE

2. REMOVE REAR WHEEL AND BRAKE DRUM

3. REMOVE HUB BOLT

Using SST, remove the hub bolt.

SST 09650–17411

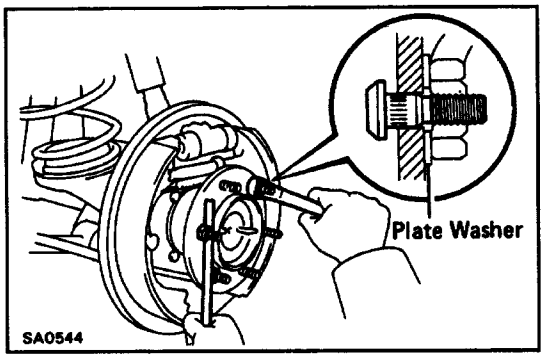

4. INSTALL HUB BOLT

Using plate washer and nut, hold the axle shaft install a new hub bolt.

5. INSTALL BRAKE DRUM AND REAR WHEEL

Torque: 103 N–m (1,050 kgf–cm, 76 ft–lbf)

6. LOWER VEHICLE

ASSEMBLY REMOVAL AND INSTALLATION

COMPONENTS

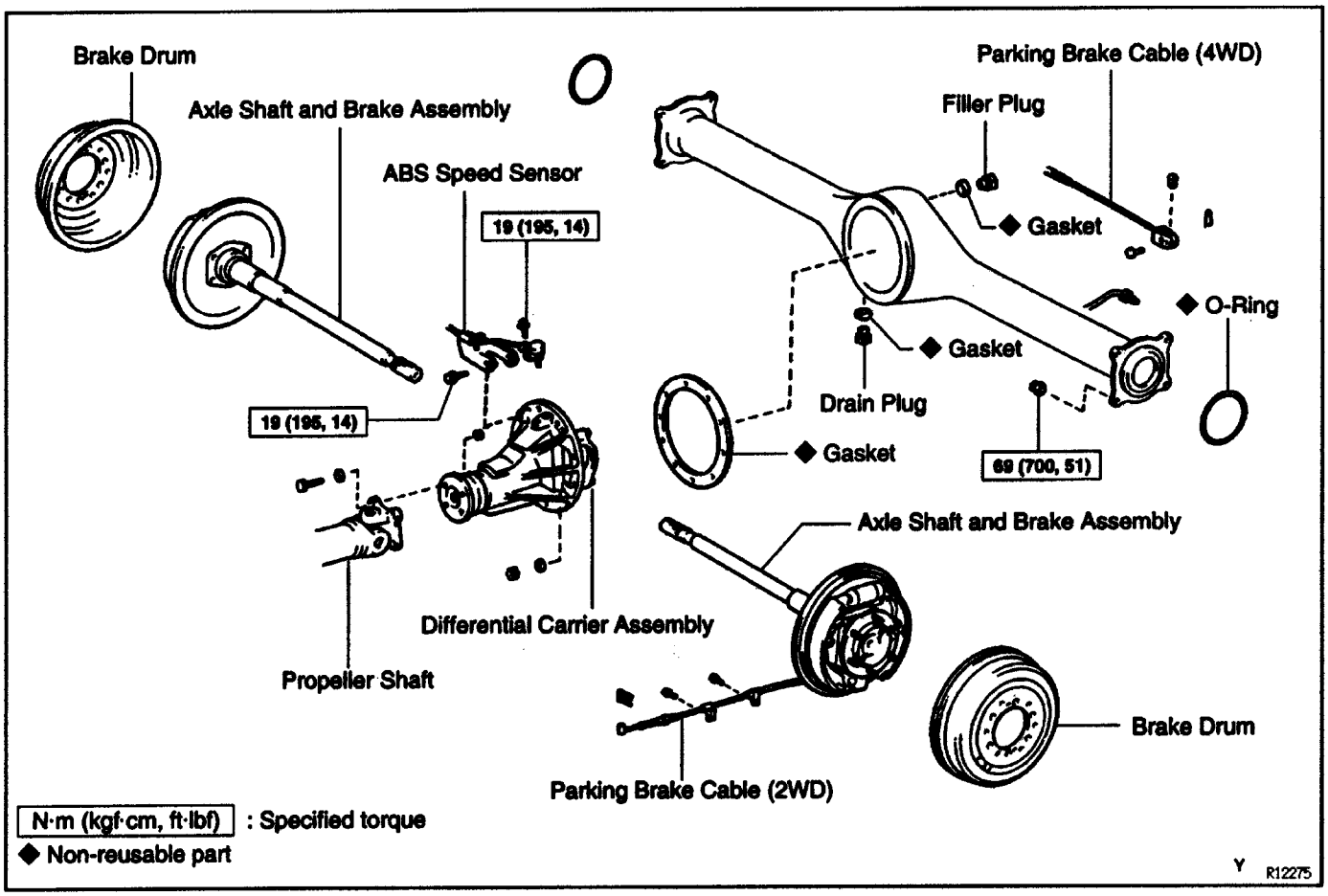

DIFFERENTIAL REMOVAL

1. REMOVE DRAIN PLUG AND DRAIN DIFFERENTIAL OIL

2. REMOVE REAR AXLE SHAFTS

(Sea page SA–128)

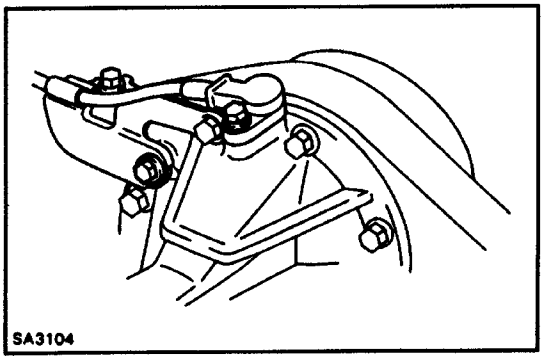

3. w/ REAR WHEEL ABS:

DISCONNECT ABS SPEED SENSOR

Remove the 3 bolts and ABS speed sensor with the bracket.

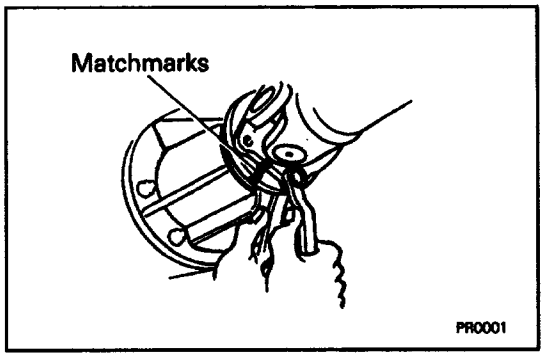

4. DISCONNECT PROPELLER SHAFT FROM DIFFERENTIAL

(a) Place matchmarks on the flanges.

(b) Remove the 4 nuts, bolts and washers, disconnect the propeller shaft.

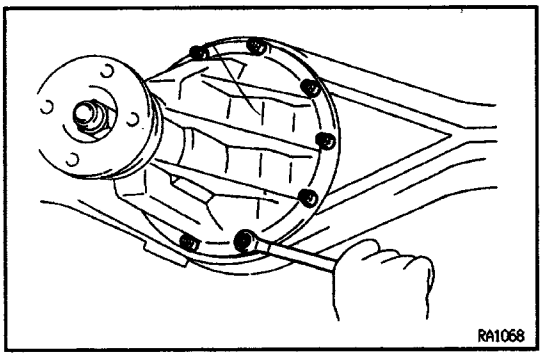

5. REMOVE DIFFERENTIAL CARRIER ASSEMBLY

Remove the 14 nuts, washers and differential carrier assembly.

NOTICE: Be careful not to damage the installation surface.

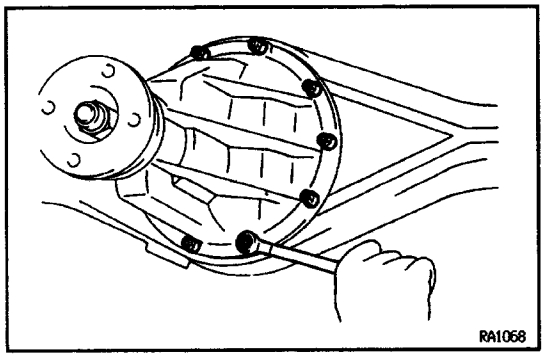

DIFFERENTIAL INSTALLATION

1. INSTALL NEW GASKET

2. INSTALL DIFFERENTIAL CARRIER ASSEMBLY

(a) Install the differential carrier assembly in the axle and install the 10 washers and nuts.

(b) Torque the nuts.

Torque: 25 N–m (250 kgf–cm, 18 ft–lbf)

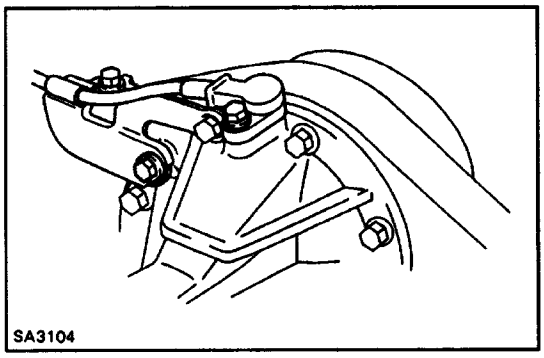

3. w/ REAR WHEEL ABS:

CONNECT ABS SPEED SENSOR

Connect the ABS speed sensor with the bracket and install the 2 bolts.

Torque: 19 N–m (196 kgf–cm, 14 ft–lbf)

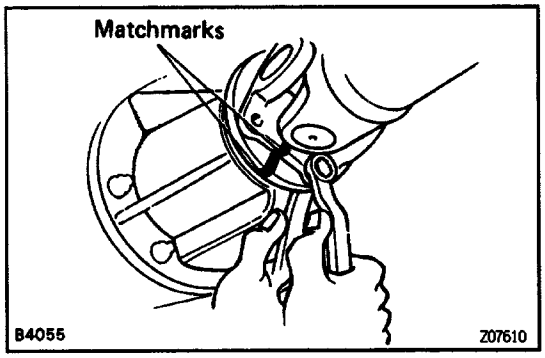

4. CONNECT PROPELLER SHAFT FLANGE TO COMPANION FLANGE

(a) Align the matchmarks on the flanges and connect the flange with 4 bolts, washers and nuts.

(b) Torque the bolts.

Torque: 74 N–m (750 kgf–cm, 54 ft–lbf)

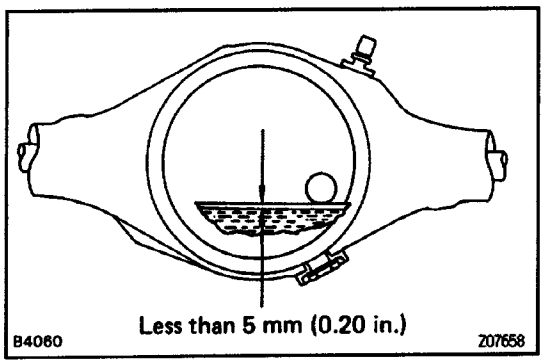

5. INSTALL DRAIN PLUG AND FILL DIFFERENTIAL WITH GEAR OIL

Oil type:

Hypoid gear oil API GL–5

Viscosity:

Above –18˚ C (0˚ F) SAE 90

Below –18˚ C (0˚ F) SAE 80W or 80W – 90

Capacity:

4 x 4 Type:

2.2 liters (2.3 US qts, 1.9 Imp. qts)

4 x 2 Type:

1.8 liters (1.9 US qts, 1.6 Imp. qts)

Install the filler plug.

Toque 49 N–m (500 kgf–cm, 36 ft–lbf)

6. w/ REAR WHEEL ABS:

CHECK ABS SPEED SENSOR SIGNAL

(See page BR–63)

REAR DIFFERENTIAL

DESCRIPTION

The differential of the 2WD and 4WD has an 8 in. ring gear.

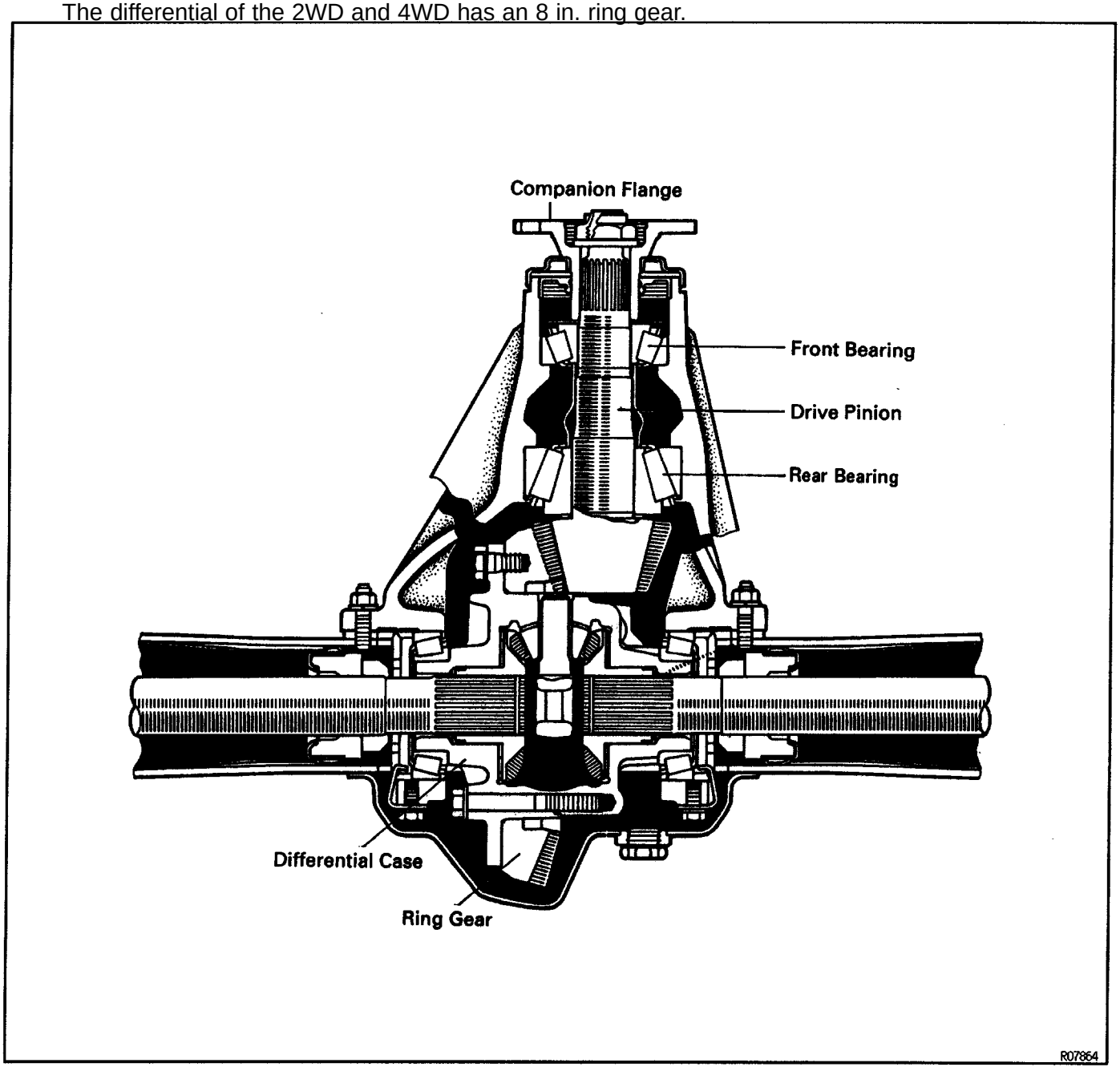

DIFFERENTIAL CARRIER

COMPONENTS

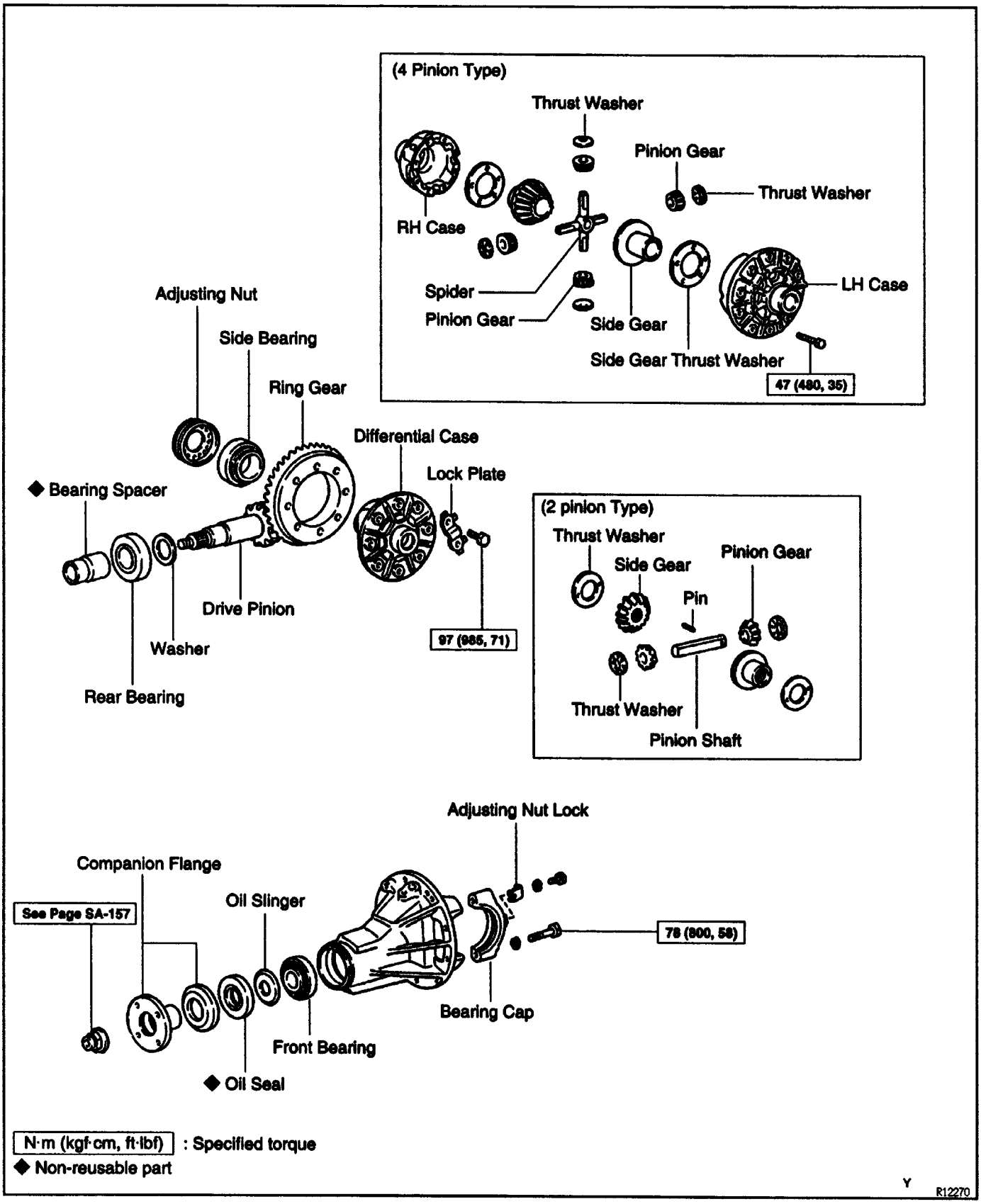

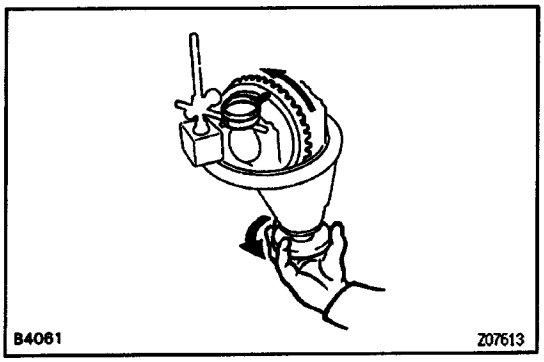

DIFFERENTIAL INSPECTION

1. CHECK RING GEAR RUNOUT

If the runout is greater than the maximum, install a new ring gear.

Maximum runout:

0.10 mm (0.0039 in.)

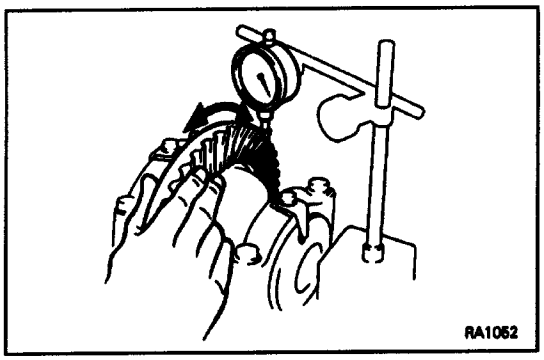

2. CHECK RING GEAR BACKLASH

If the backlash is not within specifications, adjust the side bearing preload or repair as necessary.

(See page SA–149)

Backlash:

0.13 – 0.18 mm (0.0051 – 0.0071 In.)

3. INSPECT TOOTH CONTACT BETWEEN RING GEAR AND DRIVE PINION

(See page SA–155)

Note the tooth contact position.

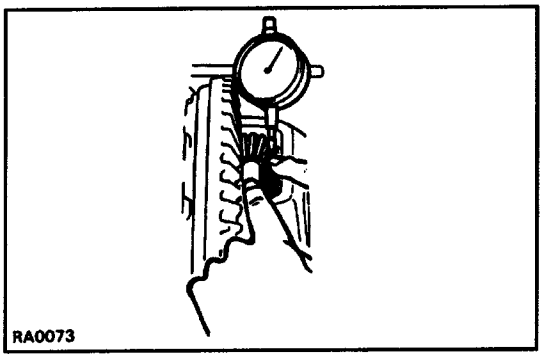

4. 2 PINION TYPE:

CHECK SIDE GEAR BACKLASH

Measure the side gear backlash while holding 1 pinion gear toward the case.

Backlash:

0.05 – 0.20 mm (0.0020 – 0.0079 In.)

If the backlash is not within specification, install the proper thrust washers.

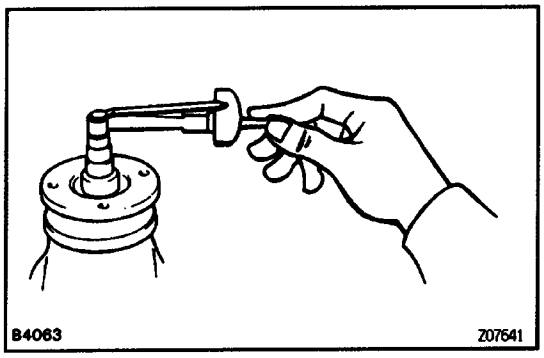

5. MEASURE DRIVE PINION PRELOAD

Using a torque wrench, measure the preload of backlash between the drive pinion and ring gear.

Preload (starting):

2 pinion type:

0.9 – 1.3 N–m

(9 – 13 kgf–cm, 7.8 – 11.3 in.–lbf)

4 pinion type:

0.5 – 0.8 N–m

(5 m– 8 kgf–cm, 4.3 – 6.9in.–lbf)

6. CHECK TOTAL PRELOAD

Using a torque wrench, measure the total preload.

Total preload (starting):

Add drive pinion preload

0.4 – 0.6 N–m

(4 – 6 kgf–cm, 3.5 – 5.2 in.–lbf)

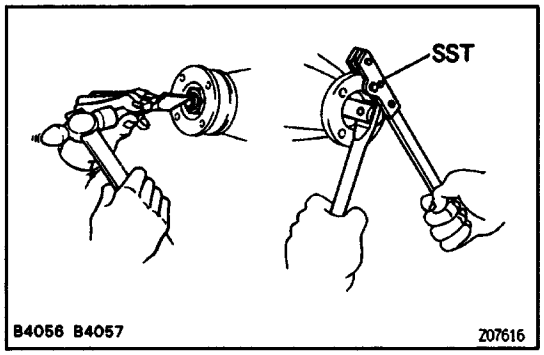

DIFFERENTIAL CARRIER DISASSEMBLY

1. REMOVE COMPANION FLANGE

(a) Using a hammer and chisel, loosen the staked part of the nut.

(b) Using SST to hold the flange, remove the nut.

SST 09330–00021

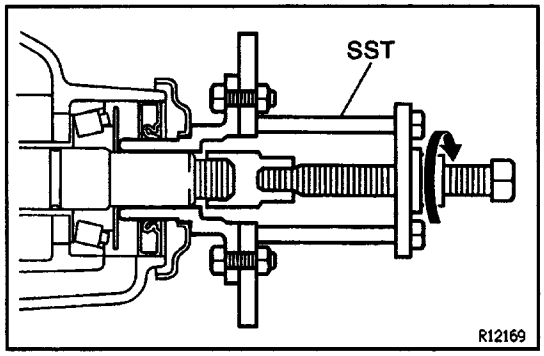

(c) Using SST, remove the companion flange.

SST 09950–30010

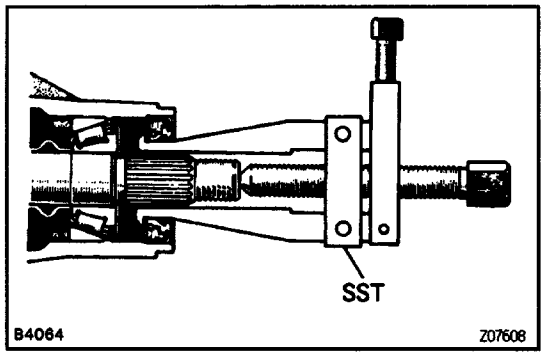

2. REMOVE OIL SEAL AND OIL SLINGER

(a) Using SST, remove the oil seal from the housing.

SST 09308–10010

(b) Remove the oil slinger.

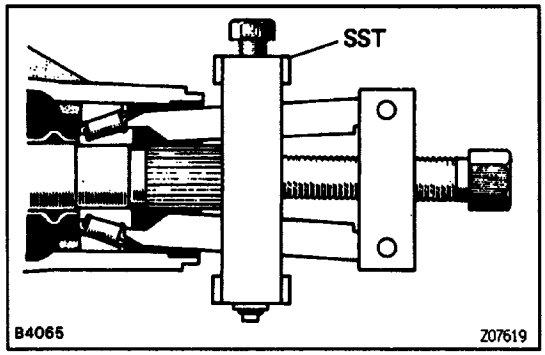

3. REMOVE FRONT BEARING AND BEARING SPACER

(a) Using SST, remove the front bearing from the drive pinion.

SST 09556 – 30010

(b) Remove the bearing spacer.

If the front bearing is damaged or worn, replace the bearing.

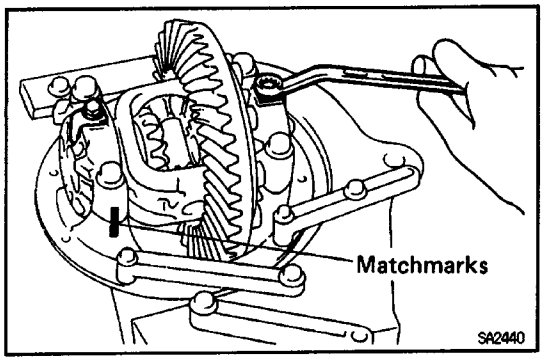

4. REMOVE DIFFERENTIAL CASE AND RING GEAR

(a) Place matchmarks on the bearing cap and differential carrier.
(b) Remove the 2 adjusting nut locks.
(c) Remove the 2 bearing caps and 2 adjusting nuts.
(d) Remove the bearing outer races.
(e) Remove the differential case from the carrier.

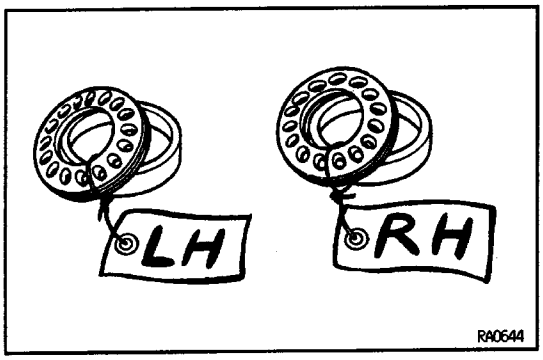

HINT: Tag the disassembled parts to show the location for reassembly.

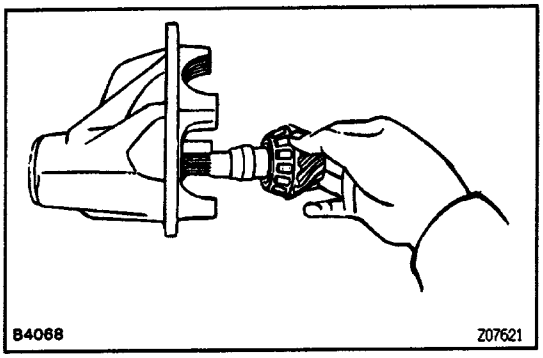

5. REMOVE DRIVE PINION FROM DIFFERENTIAL CARRIER

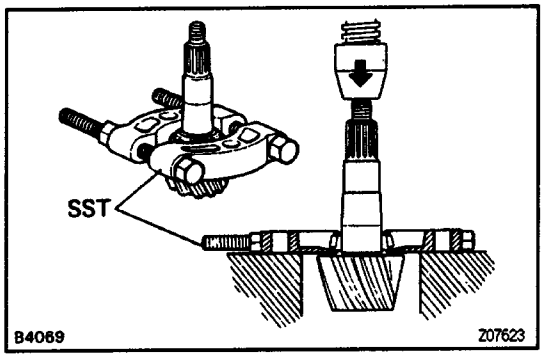

6. REPLACE DRIVE PINION REAR BEARING

(a) Using a press and SST, pull out the rear bearing from the drive pinion.
SST 09950–00020

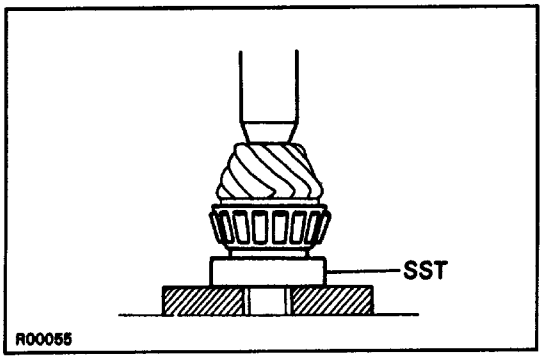

(b) Using SST and a press, press the reused washer and new rear bearing on the drive pinion.
SST 09506–30012

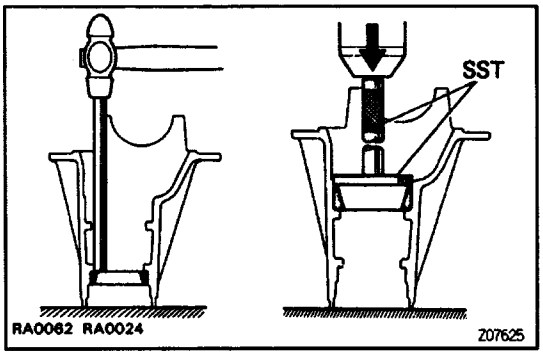

7. REPLACE DRIVE PINION FRONT AND REAR BEARING OUTER RACES

(a) Using a hammer and brass bar, drive out the outer race.

(b) Using SST and a press, drive in a new outer race.

SST

Front side:

09608 – 35014 (09608 – 06020, 09608 – 06110)

Rear side 4 pinion type:

09608–35014 (09608–06020, 09608–06180)

Rear side 2 pinion type:

09608–35014 (09608–06020, 09608–06120)

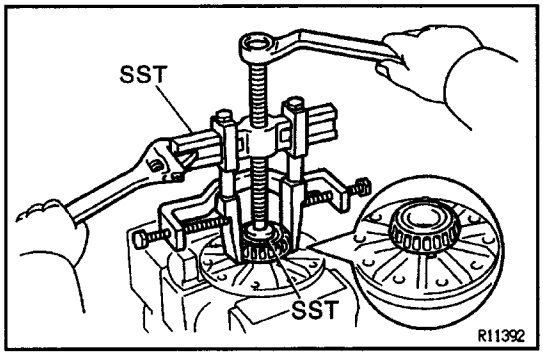

8. REMOVE SIDE BEARINGS FROM DIFFERENTIAL CASE

Using SST, pull the side bearing from the differential case.

SST 09710–14012 (09710–00010),
09950–40010

HINT: Fix the claws of SST to the notches in the differential case.

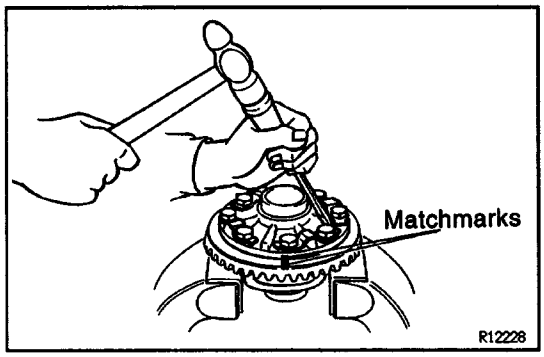

9. REMOVE RING GEAR

(a) Using a chisel and hammer, unstake the plates.

(b) Remove the ring gear set bolts and lock plates.

(c) Place alignment matchmarks on the ring gear and differential case.

(d) Using plastic or copper hammer, tap on the ring gear to separate it from the differential case.

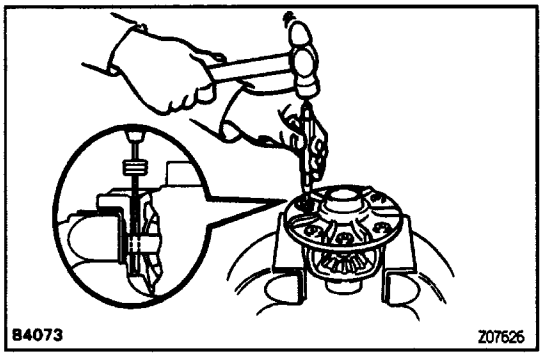

10. 2 Pinion Type:

DISASSEMBLE DIFFERENTIAL CASE

Using a pin punch and hammer, drive out the straight pin.

Remove the pinion shaft, 2 pinion gears, 2 side gears and 2 thrust washers.

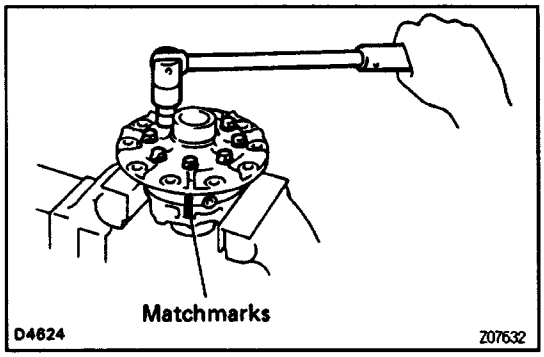

11. 4 Pinion Type:

DISASSEMBLE DIFFERENTIAL CASE

(a) Place the matchmarks on the LH and RH cases.

(b) Remove the 8 bolts.

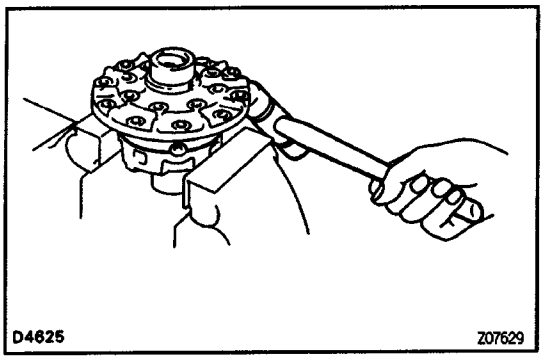

(c) Using a plastic hammer, separate the LH and RH cases.

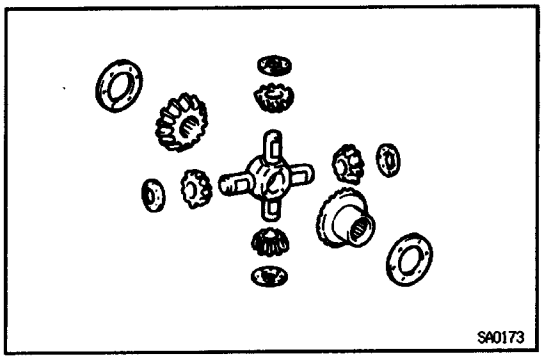

(d) Remove these parts:

- 2 side gears
  2 side gears thrust washers
- Spider
- 4 pinion gears
- 4 pinion gears thrust washers

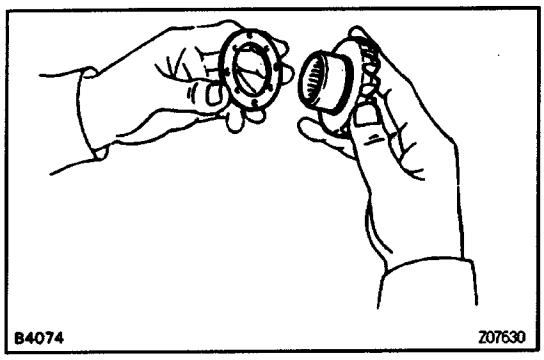

DIFFERENTIAL CARRIER ASSEMBLY

1. 2 Pinion Type:

ASSEMBLE DIFFERENTIAL CASE

(a) Install the proper thrust washers and side gears.
Using the table below, select thrust washers which will ensure that the backlash is within specification.
Try to select washers of the same size for both sides.

Backlash:

0.05 – 0.20 mm (0.0020 – 0.0079 in.)

Thrust washer thickness

Thickness mm (in.)	Thickness mm (in.)
1.6 (0.063)	**1.8 (0.071)**
1.7 (0.067)	**–**

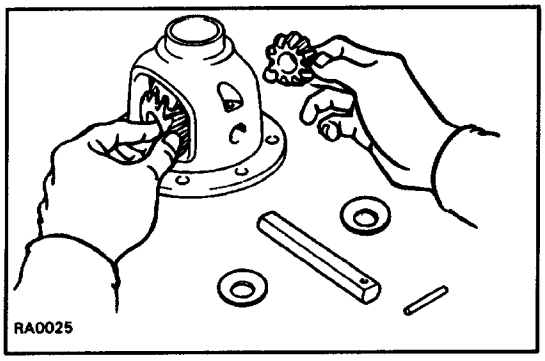

(b) Install thrust washers and side gears in the differential case.

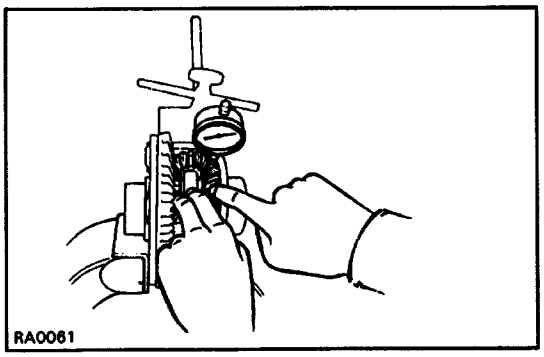

(c) Check the side gear backlash.
Measure the side gear backlash while holding 1 pinion gear toward the case.

Backlash:

0.05 – 0.20 mm (0.0020 – 0.0079 In.)

If the backlash is not within specification, install a thrust washer of different thickness.

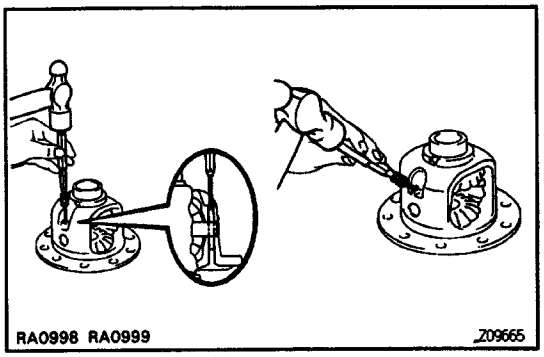

(d) Install the straight pin.
Using a pin punch and hammer, drive the straight pin through the case and hole in the pinion shaft.

Stake the pin and differential case.

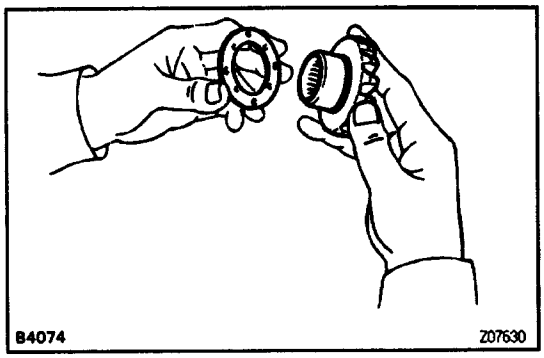

2. 4 Pinion Type:

ASSEMBLE DIFFERENTIAL CASE

(a) Install the thrust washer to the side gear.

(b) Install the side gear to the RH case.

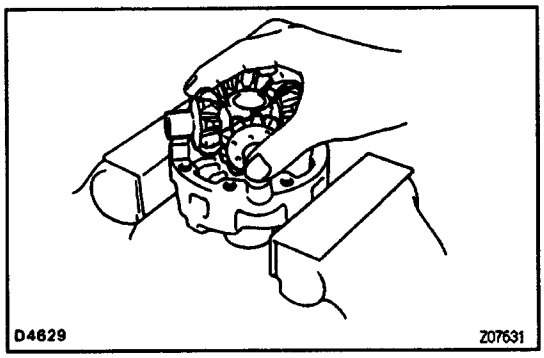

(c) Install the 4 pinion gears and thrust washers to the spider.

(d) Install the pinion gear and spider to the RH case.

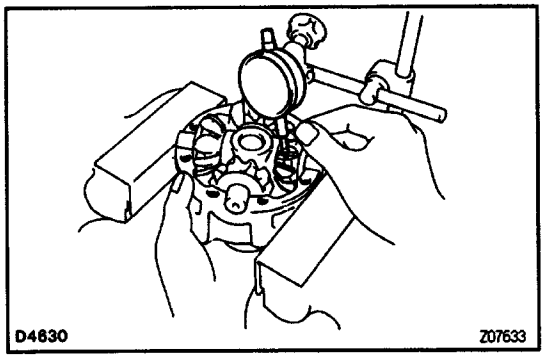

(e) Hold the side gear, measure the side gear backlash.

Backlash:

0.05 – 0.20 mm (0.0020 – 0.0079 in.)

HINT: Measure the backlash at the RH case at the LH case.

(f) If the backlash is not within specification, install a thrust washer of a different thickness.

HINT: Use washer of the same thickness on both the right and left sides.

Thickness mm (in.)	Thickness mm (in.)
0.9 (0.035)	**1.2 (0.047)**
1.0 (0.039)	**1.3 (0.051)**
1.1 (0.043)	**–**

(g) Install the side gear and thrust washer to the RH case.
(h) Install the pinion gears and spider to the RH case.
(i) Install the side gear and thrust washer to the LH case.
(j) Apply gear oil to the each parts.

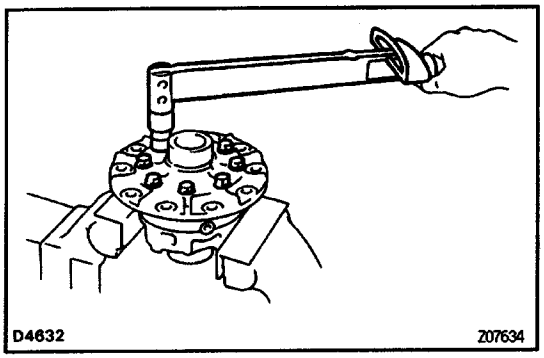

(k) Align the matchmarks on the LH and RH case.
(1) Torque the 8 bolts.
Torque: 47 N–m (480 kgf–cm, 35 ft–lbf)

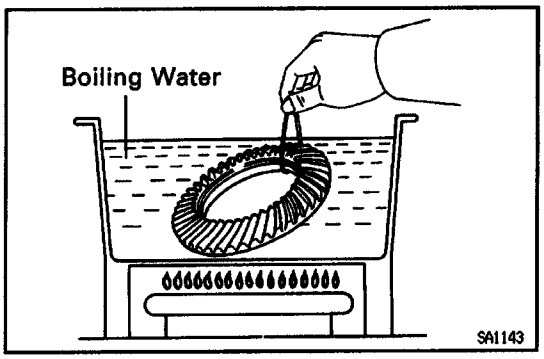

3. INSTALL RING GEAR ON DIFFERENTIAL CASE

(a) Clean the contact surfaces of the differential case and ring gear.
(b) Heat the ring gear in boiling water.
(c) Carefully remove the ring gear from the water.
(d) After the moisture on the ring gear has completely evaporated, quickly install the ring gear to the differential case.

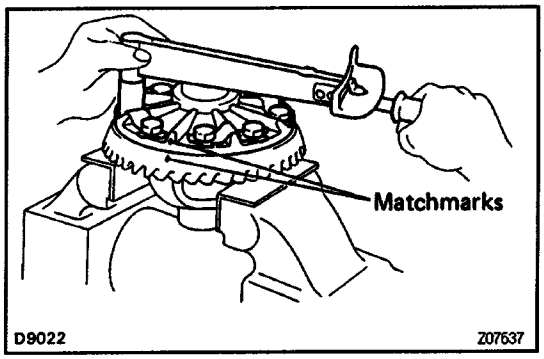

(e) Align the matchmarks on the ring gear and differential case.
(f) Coat the ring gear set bolts with gear oil.
(g) Temporarily install the lock plates and set bolts.
(h) After the ring gear cools down enough, tighten the set bolts uniformly and a little at a time.
Torque: 97 N–m (985 kgf–cm, 71 ft–lbf)

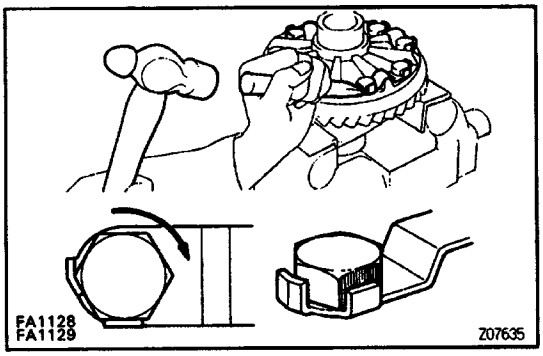

Using a hammer and drift punch, stake the lock plates.
HINT: Stake 1 claw flush with the flat surface of the bolt. For the claw contacting the protruding portion of the bolt, stake only the half portion of the tightening side.

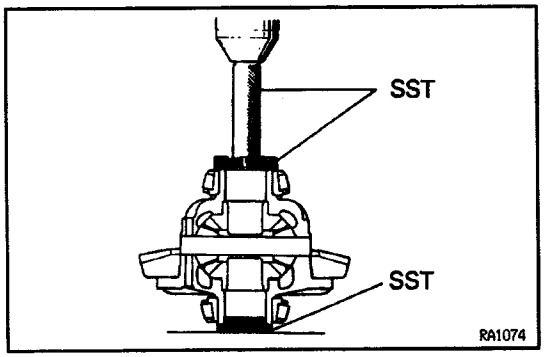

4. INSTALL SIDE BEARING

Using SST and a press, press the side bearing on the differential case.
SST 09550 –10012 (09252 –10010, 09557 –10010, 09558–10010)

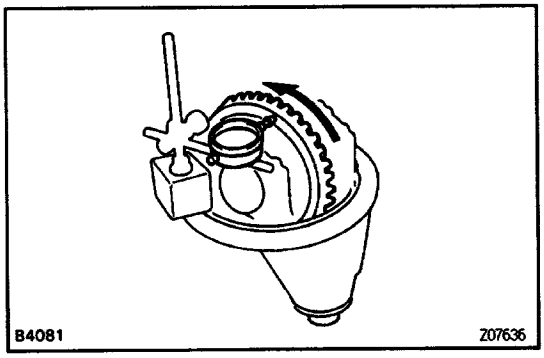

5. CHECK RING GEAR RUNOUT

(a) Install the differential case onto the carrier and tighten the adjusting nut just to where there is no play in the bearings.
(b) Check the ring gear runout.
Maximum runout:
0.10 mm (0.0039 in.)

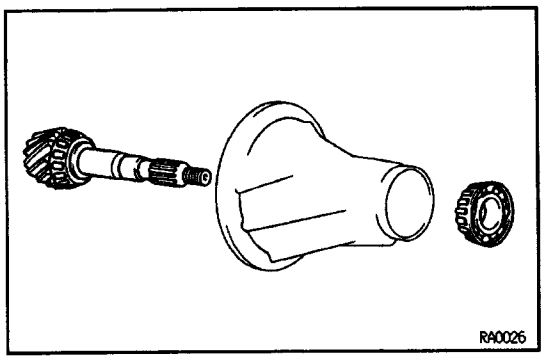

6. TEMPORARILY ADJUST DRIVE PINION PRELOAD

(a) Install these parts:
Drive pinion
Front bearing
HINT: Assemble the spacer, oil slinger and oil sea after adjusting the gear contact pattern.

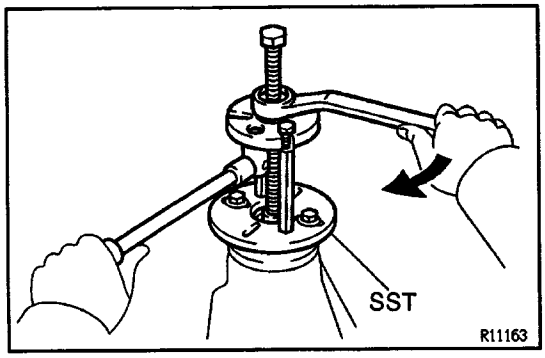

(b) Install the companion flange with the SST.
SST 09950–30010

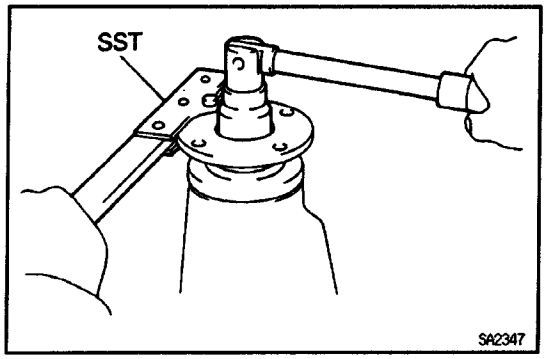

(c) Adjust the drive pinion preload by tightening the companion flange nut.
Using SST to hold the flange, tighten the nut.
SST 09330–00021

NOTICE: As there is no spacer, tighten a little at a time, being careful not to overtighten.

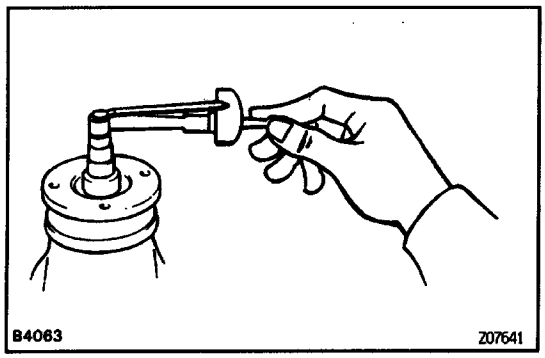

(d) Using a torque wrench, measure the preload.

Preload (starting):
New bearing:
2 pinion type:
1.9 – 2.5 N . m
(19 – 26 kgf–cm, 16.5 – 22.6 in.–lbf)
4 pinion type:
1.0 – 1.6 N–m
(10 – 16 kgf–cm, 8.7 – 13.9 in.–lbf)
Reused bearing:
2 pinion type:
0.9 – 1.3 N–m
(9 – 13 kgf–cm, 7.8 – 11.3 in.–lbf)
4 pinion type:
0.5 – 0.8 N – m
(5 – 8 kgf–cm, 4.3 – 6.9 in.–lbf)

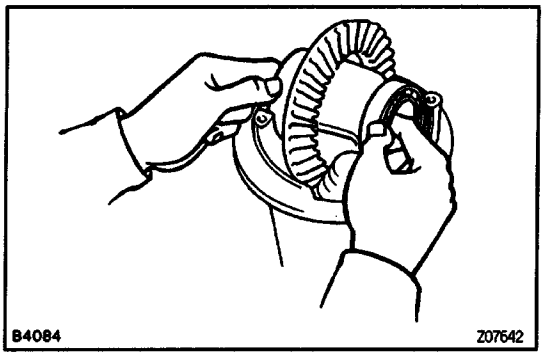

7. INSTALL DIFFERENTIAL CASE IN CARRIER

(a) Place the bearing outer races on their respective bearings. Make sure the left and right outer races are not interchanged.
(b) Install the case in the carrier.
HINT: Make sure that there is backlash between the ring gear and drive pinion.

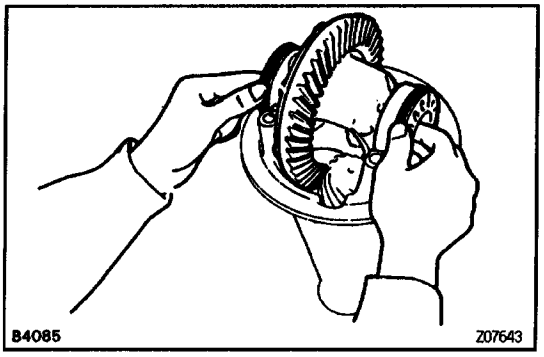

8. INSTALL ADJUSTING NUTS

Install the adjusting nuts on the carrier, making sure the nuts are threaded properly.

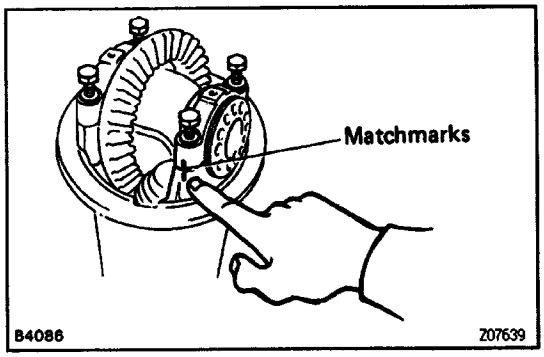

9. INSTALL BEARING CAPS

Align the matchmarks on the cap and carrier. Screw in the 2 bearing cap bolts 2 or 3 turns and press down the bearing cap by hand.

HINT: If the bearing cap does not fit tightly on the carrier, the adjusting nuts are not threaded properly. Reinstall the adjusting nuts if necessary.

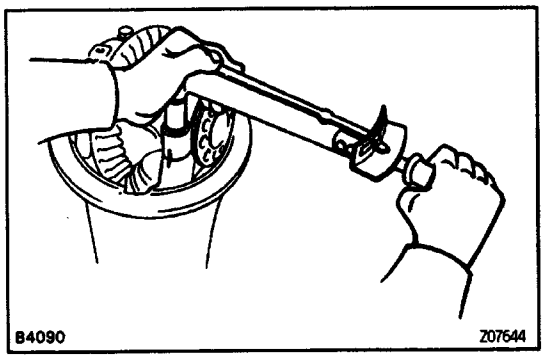

10. ADJUST SIDE BEARING PRELOAD

(a) Tighten the 4 bearing cap bolts to the specified torque, then loosen them to the point where they can be turned by hand.

Torque: 78 N–m (800 kgf–cm, 58 ft–lbf)

(b) Fully tighten the 4 bearing cap bolts by hand.

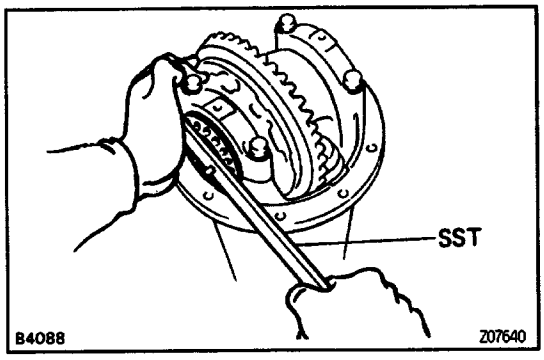

(c) Using SST, tighten the adjusting nut on the ring gear side until the ring gear has a backlash of about 0.2 mm (0.008 in.).
SST 09504–00011

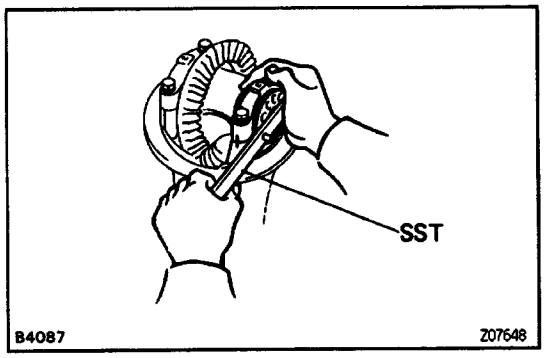

(d) While turning the ring gear, use SST to fully tighter the adjusting nut on the drive pinion side. After the bearing are settled, loosen the adjusting nut on the drive pinion side.
SST 09504–00011

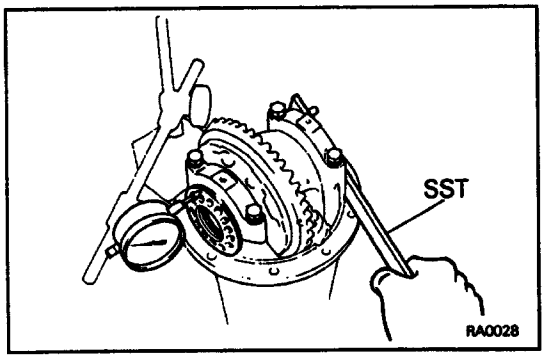

(e) Place a dial indicator on the top of the adjusting nut on the ring gear side.

(f) Adjust the side bearing for zero preload by tightening the other adjusting nut until the pointer on the indicator begins to move.

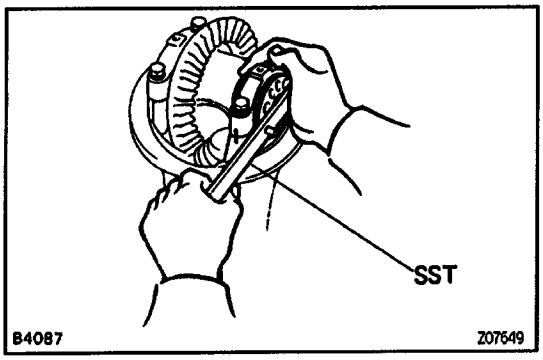

(g) Tighten the adjusting nut 1 – 1.5 notches from the zero preload position.

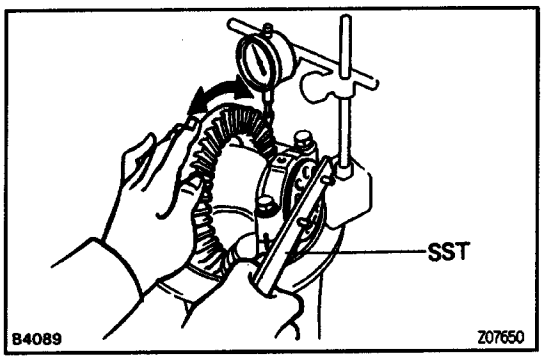

(h) Using a dial indicator, adjust the ring gear backlash within specification.

Ba**cklash:**

0.13 – 0.18 mm (0.0051 – 0.0071 in.)

HINT: The backlash is adjusted by turning the left and right adjusting nuts equal amounts. For example, loosen the nut on the left side 1 notch and tighten the nut on the right side one notch.

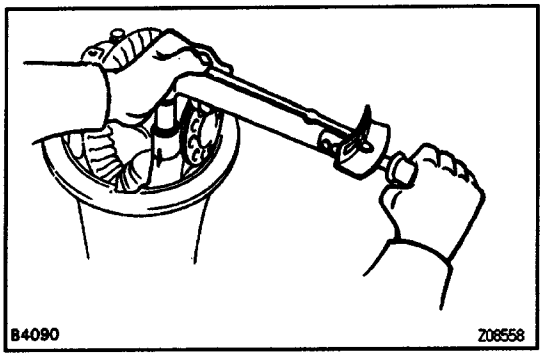

(i) Torque the bearing cap bolts.

Torque: 78 N–m (800 kgf–cm, 58 ft–lbf)

(j) Recheck the ring gear backlash.

Backlash:

0.13 – 0.18 mm (0.0051 – 0.0071 in.)

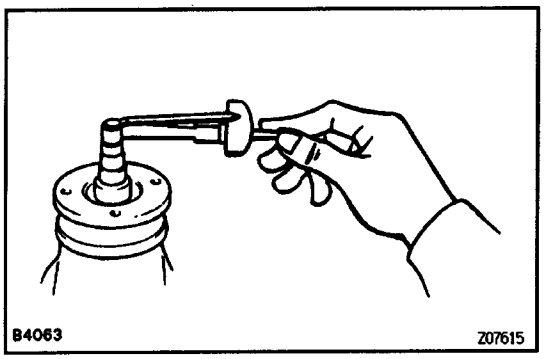

(k) Using a torque wrench, measure the total preload.

Total preload (starting):

Add drive pinion preload

0.4 – 0.6 N–m (4 –6 kgf–cm, 3.5 – 5.2 in.–lbf)

Backlash:

0.13 – 0.18 mm (0.0051 – 0.0071 in.)

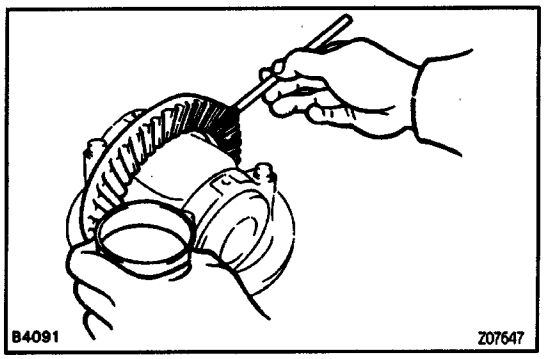

11. INSPECT TOOTH CONTACT BETWEEN RING GEAR AND DRIVE PINION

(a) Coat 3 or 4 teeth at three different positions on the ring gear with red lead.

(b) Hold the companion flange firmly and rotate the ring gear in both directions.

(c) Inspect the tooth pattern.

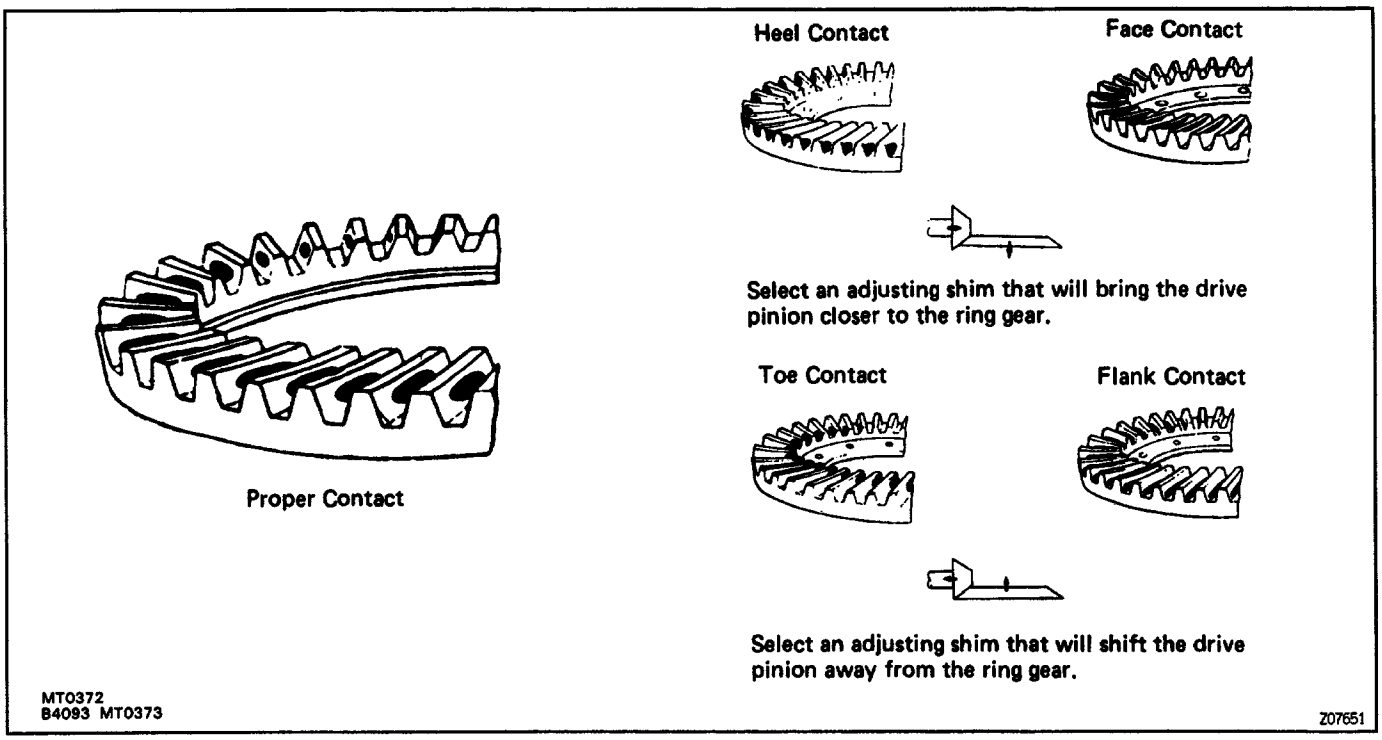

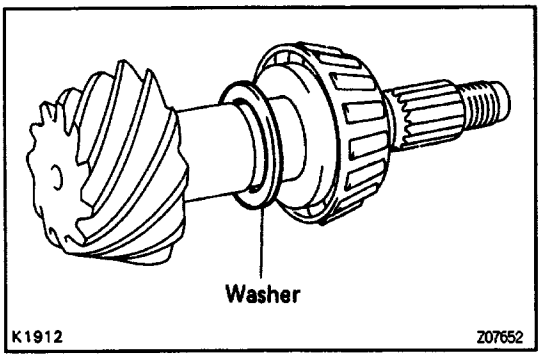

If the teeth are not contacting properly, use the following chart to select a proper washer for correction.
Washer thickness

Thickness mm (in.)	Thickness mm (in.)
1.70 (0.0669)	**2.03 (0.0799)**
1.73 (0.0681)	**2.06 (0.0811)**
1.76 (0.0693)	**2.09 (0.0823)**
1.79 (0.0705)	**2.12 (0.0835)**
1.82 (0.0717)	**2.15 (0.0846)**
1.85 (0.0728)	**2.18 (0.0858)**
1.88 (0.0740)	**2.21 (0.0870)**
1.91 (0.0752)	**2.24 (0.0882)**
1.94 (0.0764)	**2.27 (0.0894)**
1.97 (0.0776)	**2.30 (0.0906)**
2.00 (0.0787)	**2.33 (0.0917)**

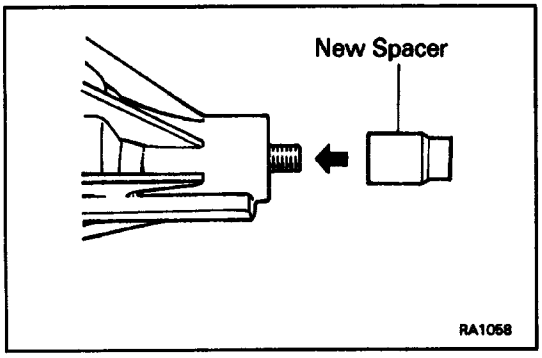

12. REMOVE COMPANION FLANGE
(See page SA–146)
13. REMOVE FRONT BEARING
(See page SA–146)
14. INSTALL NEW BEARING SPACER AND FRONT BEARING
(a) Install a new bearing spacer on the shaft.
(b) Install the front bearing on the shaft.

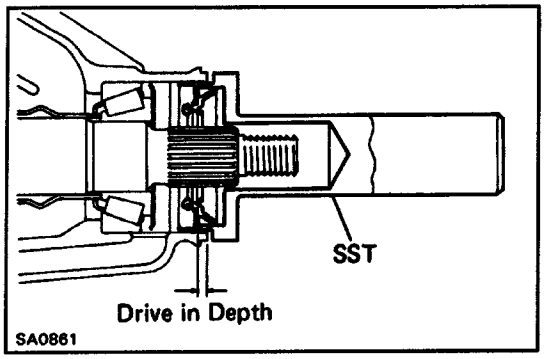

15. INSTALL OIL SLINGER AND NEW OIL SEAL

(a) Install the oil slinger facing, as shown.

(b) Using SST, drive in a new oil seal, as shown.

SST 09554–22010

Oil seal drive in depth:

1.0 mm (0.039 in.)

(c) Apply MP grease to the oil seal lip.

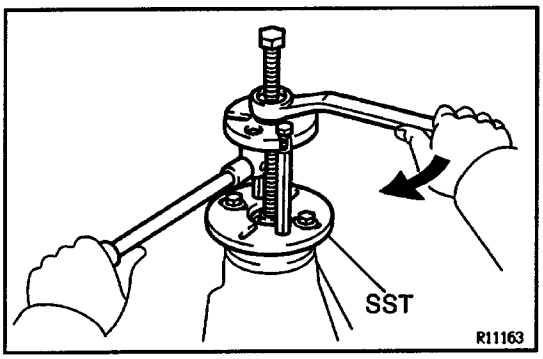

16. INSTALL COMPANION FLANGE

(a) Install the companion flange with the SST.

SST 09950–30010

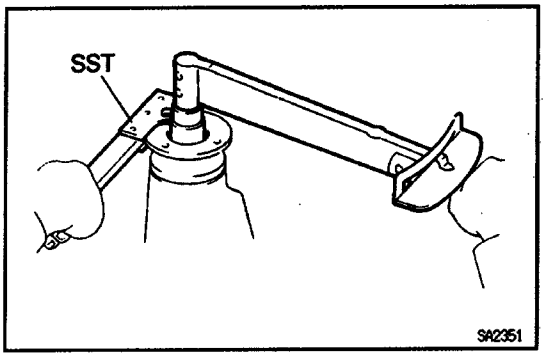

(b) Coat the threads of a new nut with MP grease.

(c) Using SST to hold the flange, tighten the nut.

SST. 09330–00021

Torque: 196 N–m (2.000 kgf–cm, 145 ft–lbf)

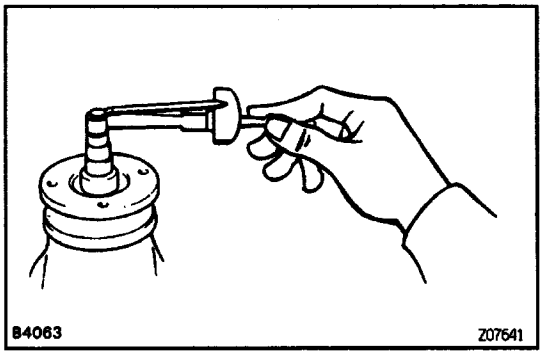

17. ADJUST DRIVE PINION PRELOAD

Using a torque meter, measure the preload of the backlash between the drive pinion and ring gear.

Preload (starting):

New bearing

2 pinion type:

1.9 – 2.5 N–m

(19 – 26 kgf–cm, 16.5 – 22.6 in.–lbf)

4 pinion type:

1.4 – 1.6 N–m

(10 – 16 kgf–cm, 8.7 – 13.9 in.–lbf)

Reused bearing

2 pinion type:

0.9 – 1.3 N – m

(9 – 13 kgf–cm, 7.8 – 11.3 in.–lbf)

4 pinion type:

0.5 – 0.8 N – m

(5 – 8 kgf–cm, 4.3 – 6.9 in.–lbf)

(a) If preload is greater than specification, replace the bearing spacer.

(b) If preload is less than specification, retighten the nut a little at a time with a torque of 13 N–m (1130 kgf–cm, 9 ft–lbf) until the specification preload is reached.

Maximum torque:

343 N–m (3,500 kgf–cm, 253 ft–lbf)

If the maximum torque is exceeded while retightening the nut, replace the bearing spacer and repeat the preload procedure. Do not back off the pinion nut to reduce the preload.

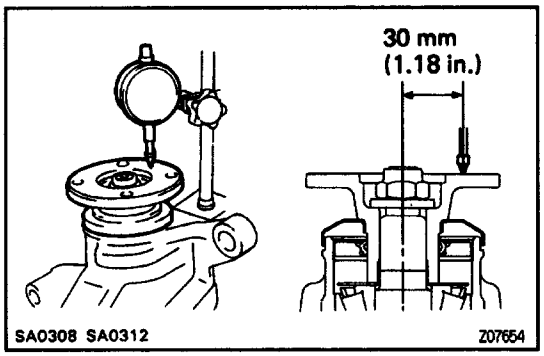

18. CHECK RUNOUT OF COMPANION FLANGE

Maximum vertical runout:

0.10 mm (0.0039 in.)

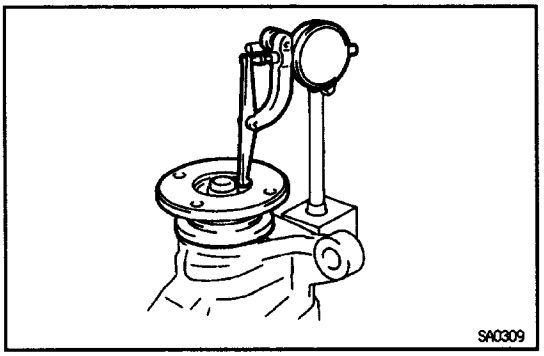

Maximum lateral runout:

0.10 mm (0.0039 in.)

19. STAKE DRIVE PINION NUT

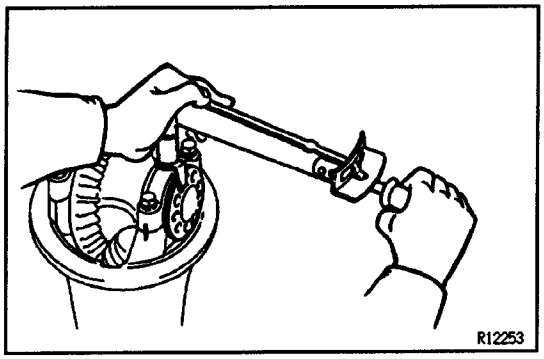

20. INSTALL ADJUSTING NUT LOCKS

Install the lock on the bearing caps.

Torque: 13 N–m (130 kgf–cm, 9 ft–lbf)

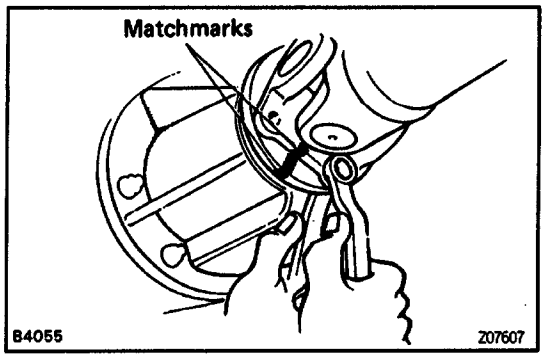

ON–VEHICLE REPAIR

OIL SEAL ON–VEHICLE REPLACEMENT

1. DISCONNECT PROPELLER SHAFT FROM DIFFERENTIAL

(a) Place matchmarks on the flanges.

(b) Remove the 4 nuts, washers and bolts.

2. REMOVE COMPANION FLANGE

(See page SA–146)

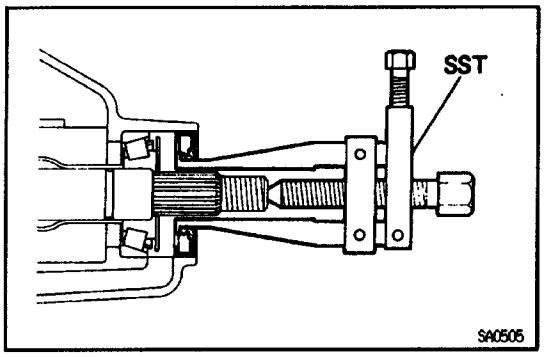

3. REMOVE OIL SEAL AND OIL SLINGER

(a) Using SST, remove the oil seal from the housing.

SST 09308 –10010

(b) Remove the oil slinger.

4. REMOVE FRONT BEARING AND BEARING SPACER

(See page SA–146)

5. INSTALL NEW BEARING SPACER AND FRONT BEARING

(See page SA–156)

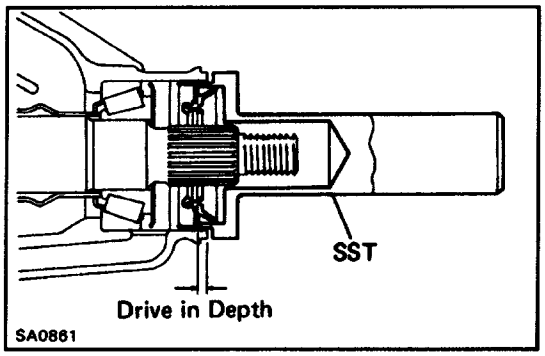

6. INSTALL OIL SLINGER AND NEW OIL SEAL

(a) Install the oil slinger facing, as shown.

(b) Using SST, drive in a new oil seal, as shown.

SST 08554–22010

Oil seal drive in depth:

1.0 mm (0.039 In.)

(c) Apply MP grease to the oil seal lip.

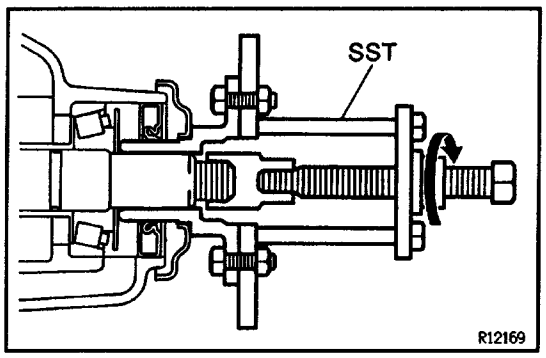

7. INSTALL COMPANION FLANGE

(See page SA–167)

8. ADJUST DRIVE PINION BEARING PRELOAD

(See page SA–157)

9. STAKE DRIVE PINION NUT

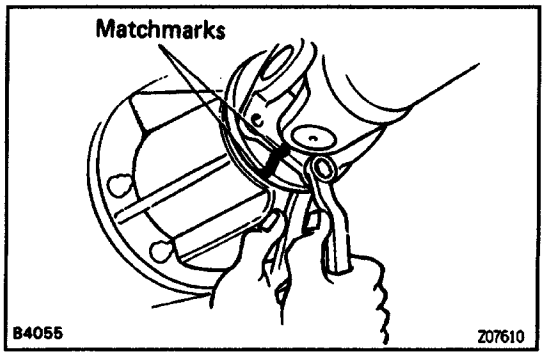

10. CONNECT PROPELLER SHAFT FLANGE TO COMPANION FLANGE

(a) Align the matchmarks on the flanges and connect the flanges with 4 bolts, washers and nuts.

(b) Torque the 4 bolts.

Torque: 74 N–m (750 kgf–cm, 54 ft–lbf)

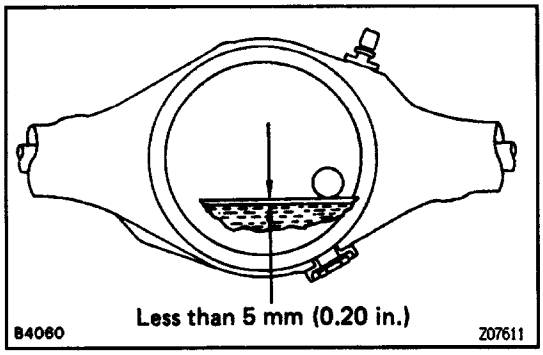

11. CHECK DIFFERENTIAL OIL LEVEL

Fill with hypoid gear oil if necessary.

Oil type:

API GL–5 hypoid gear oil

Viscosity:

Above – 18* C (0˚ F) SAE 90

Below – 18˚ C (0˚ F) SAE 80W or 80W – 90

Capacity:

4 x 4 Type:

2.2 liters (2.3 US qts, 1.9 Imp. qts)

4 x 2 Type:

1.8 liters (1.9 US qts, 1.6 Imp. qts)

PREPARATION

SST (SPECIAL SERVICE TOOLS)

	09308–10010 Oil Seal Puller	
	09330–00021 Companion Flange Holding Tool	
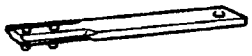	09504–00011 Differential Side Bearing Adjusting Nut Wrench	
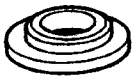	09506–30012 Differential Drive Pinion Rear Bearing Cone Replacer	
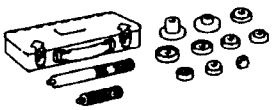	09550–10012 Replacer Set 'B'	
	(09252–10010) No. 1 Replacer Handle	
	(09557–10010) Differential Drive Pinion Front Bearing Replacer	
	(09558–10010) Rear Axle Shaft Oil Seal Replacer	
	09554–22010 Differential Oil Seal Replacer	
	09556–30010 Drive Pinion Front Bearing Remover	
	09608–35014 Axle Hub & Drive Pinion Bearing Tool Set	
	(09608–06020) Handle	
	(09608–06110) Front Hub Inner & Drive Pinion Front Bearing Cup Replacer	

	(09608–06120) Front Hub Outer Bearing Cup Replacer	
	(09608–06180) Drive Pinion Rear Bearing Cup Replacer	
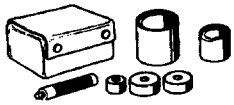	09710–14012 Rear Suspension Bushing Toot Set	
	(09710–00010) Replacer	
	09950–00020 Bearing Remover	
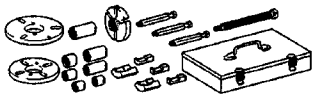	09950–30010 Puller A Set	
	09950–40010 Puller B Set	

RECOMMENDED TOOLS

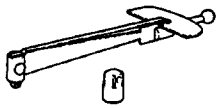	09025–00010 Torque Wrench (30 kgf–cm).	
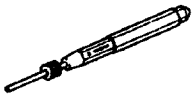	09031–00030 Pin Punch .	

EQUIPMENT

Dial indicator or dial indicator with magnetic base	
Micrometer	
Torque wrench	

LUBRICANT

Item	Capacity	Classification
Differential oil	**4 x 4 Type** **2.2 liters (2.3 US qts, 1.9 Imp. qts)** **4 x 2 Type** **1.8 liters (1.9 US qts, 1.6 Imp. qts)**	API GL–5 Hypoid gear oil [Above – 18° C (0° F)I SAE 90W [Below – 18° C (0°F)] SAE 80W or SOW – 90

COIL SPRING AND SHOCK ABSORBER

COMPONENTS

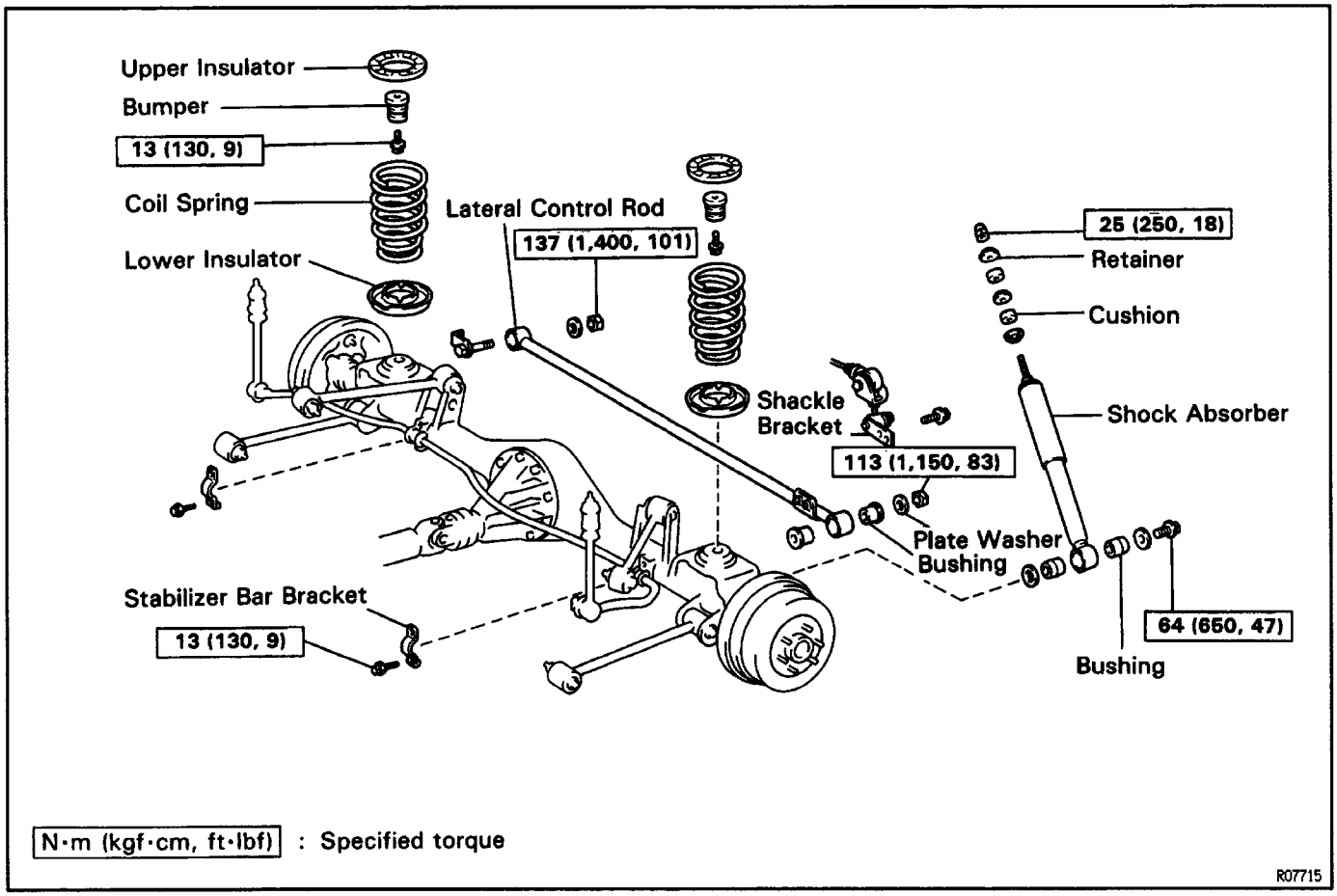

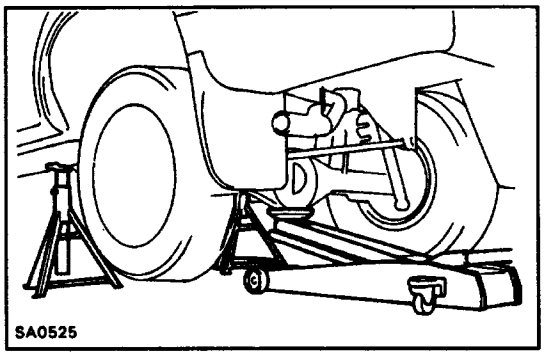

COIL SPRING AND REAR SHOCK ABSORBER REMOVAL

1. JACK UP AND SUPPORT VEHICLE

Jack up the rear axle housing and support the frame with stands. Hold the rear axle housing with a jack.

2. REMOVE WHEEL

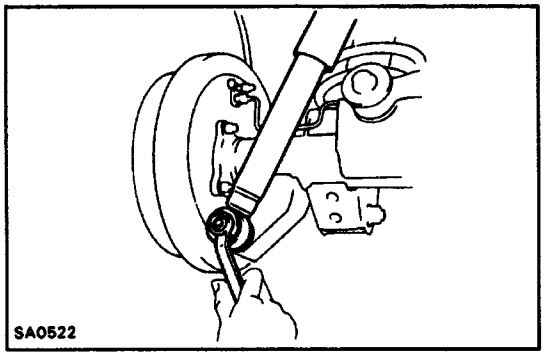

3. DISCONNECT REAR SHOCK ABSORBER

(a) Remove the bolt, washers and bushings, holding the shock absorber to the rear axis housing and disconnect the shock absorber.

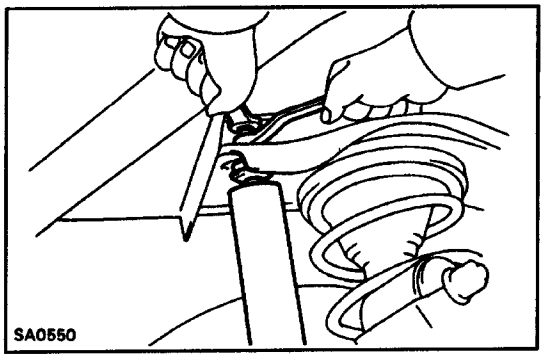

(b) If replacing the shock absorber, remove the nut, retainers and cushions, holding the shock absorber to the frame, and remove the shock absorber.

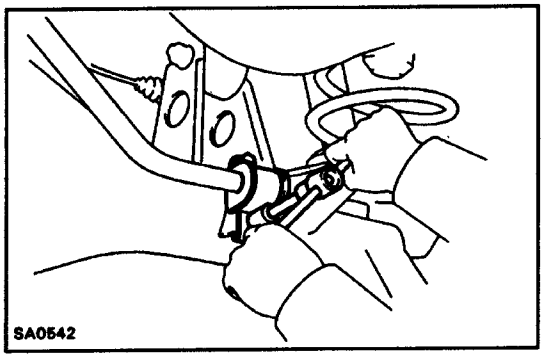

4. DISCONNECT STABILIZER BAR BRACKETS

Remove the bolts holding the stabilizer bar bracket to the rear axle housing.

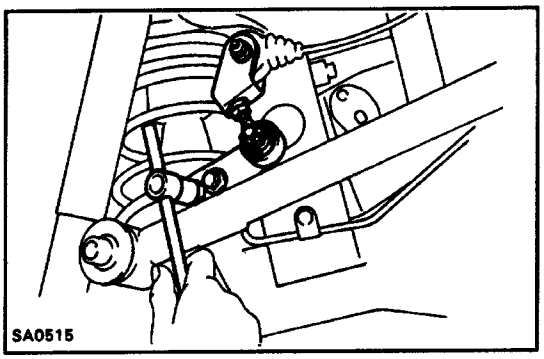

5. DISCONNECT LATERAL CONTROL ROD FROM FRAME

(a) Remove the bolt holding the RH shock absorber to the rear axle housing and disconnect the shock absorber.

(b) Remove the 2 bolts and disconnect the shackle bracket from the lateral control rod.

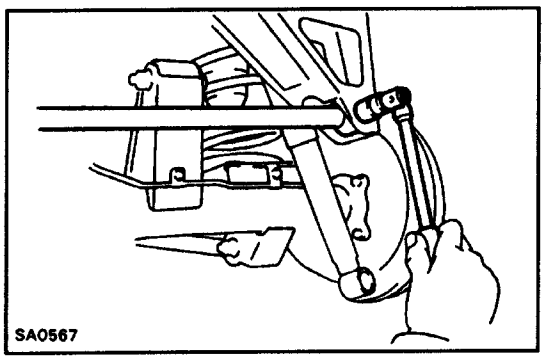

(c) Remove the nut, washer and bolt from the frame and disconnect the lateral control rod.

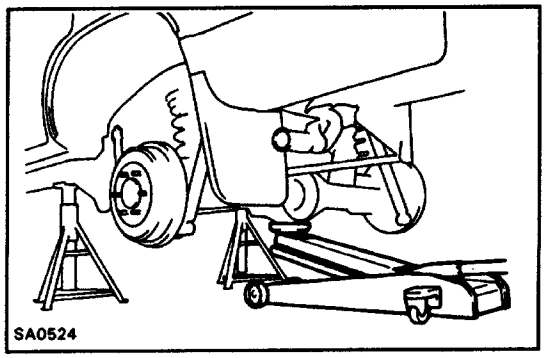

6. REMOVE COIL SPRING

(a) Lower the rear axle housing.

HINT: Be careful not to snag the brake line and parking brake cable.

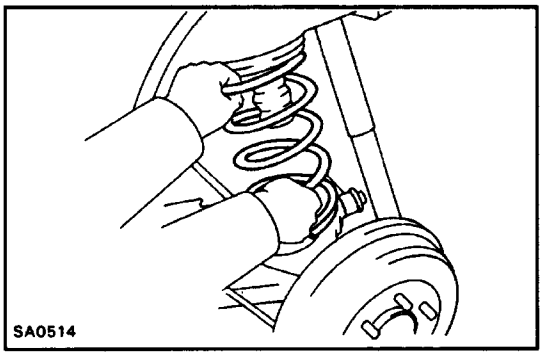

(b) While lowering the rear axle housing, remove the coil spring and upper and lower insulators.

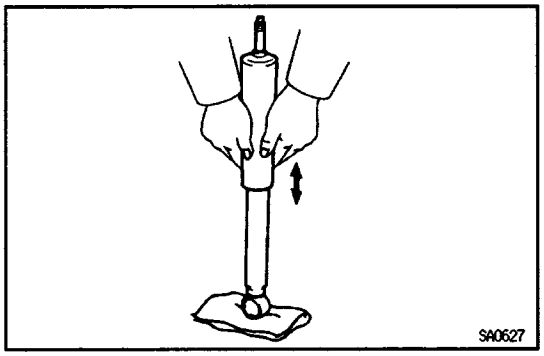

REAR SHOCK ABSORBER INSPECTION

1. INSPECT OPERATION OF SHOCK ABSORBER

(a) While pushing the shock absorber, check that the pull throughout the stroke is even, and there is no abnormal resistance or noise.

(b) Gas Filled Type:

Fully push the shock absorber in fully and release it. Check that it returns at a constant speed throughout.

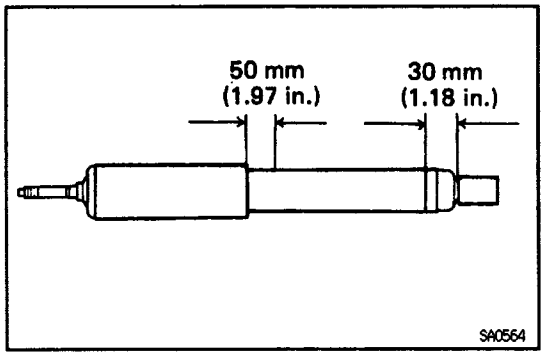

HINT: If the shock absorber is the gas filled type, this information will be engraved on the exterior of the outer shell.

2. GAS FILLED TYPE:

DISCARD SHOCK ABSORBER

Before discarding the shock absorber, drill a hole 2 – 3 mm (0.079 – 0.118 in.) in diameter at the location shown in the illustration to release the gas inside.

NOTICE:

When drilling, chips may fly out; work carefully.

The gas is colorless, odorless, and non –poisonous.

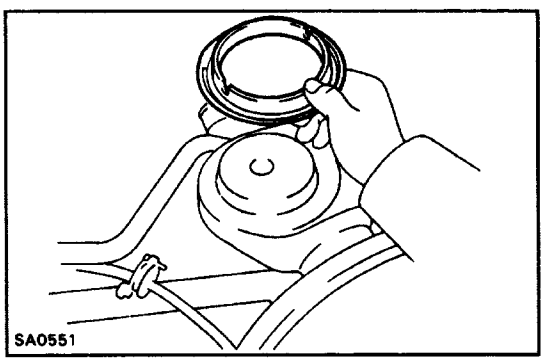

COIL SPRING AND REAR SHOCK ABSORBER INSTALLATION

1. PUT LOWER INSULATOR ON AXLE HOUSING

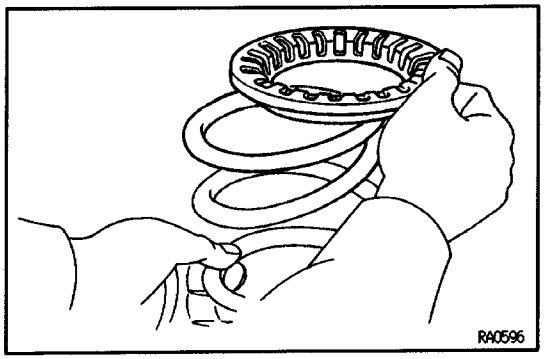

2. PUT UPPER INSULATOR ON COIL SPRING

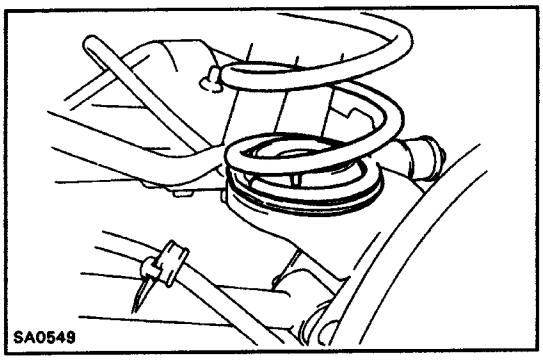

3. INSTALL COIL SPRING

4. JACK UP REAR AXLE HOUSING

5. CHECK POSITION OF LOWER INSULATOR

Check that the lower insulator is installed correctly.

If the insulator is not in the correct position, reinstall the coil spring.

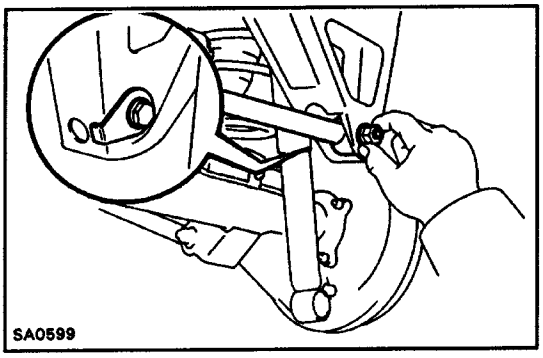

6. CONNECT LATERAL CONTROL ROD

(a) Connect the lateral control rod to the frame with the bolt, washer and nut.

HINT:

Install the bolt from the front of the vehicle (shock absorber side).

Do not tighten the nut.

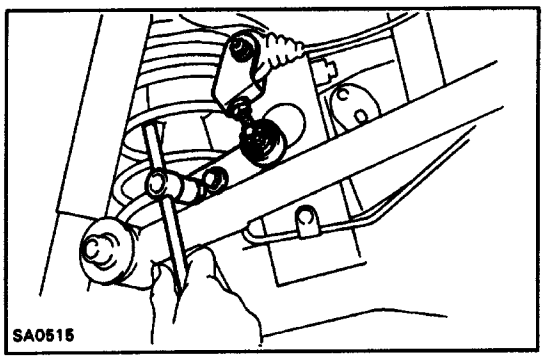

(b) Connect the shackle bracket to the lateral control rod with the 2 bolts.

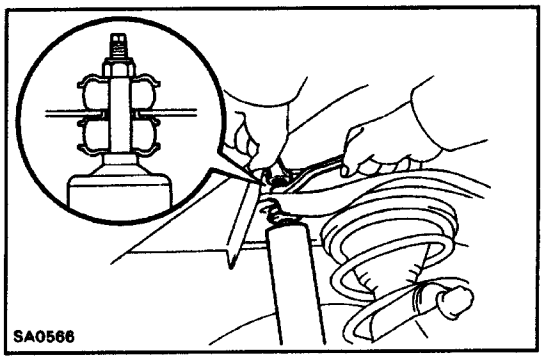

7. INSTALL SHOCK ABSORBER

(a) Connect the shock absorber to the frame with the retainers, cushions and nut. Torque the nut.

Torque: 25 N–m (250 kgf–cm. 18 ft–lbf)

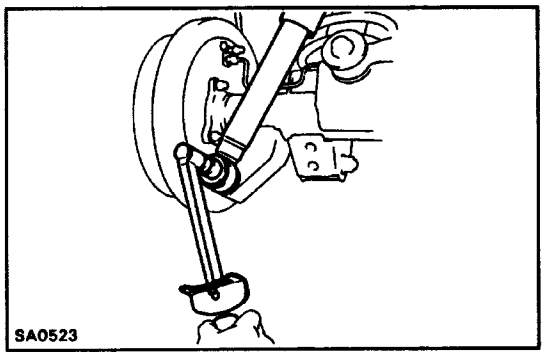

(b) Connect the shock absorber to the rear axle housing with the bushings, washers and bolt. Torque the bolt.

Torque: 64 N–m (650 kgf–cm, 47 ft–lbf)

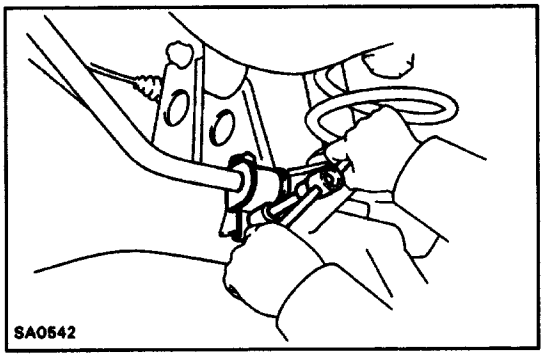

8. INSTALL STABILIZER BAR BRACKETS TO REAR AXLE HOUSING

Torque: 13 N–m (130 kgf–cm, 9 ft–lbf)

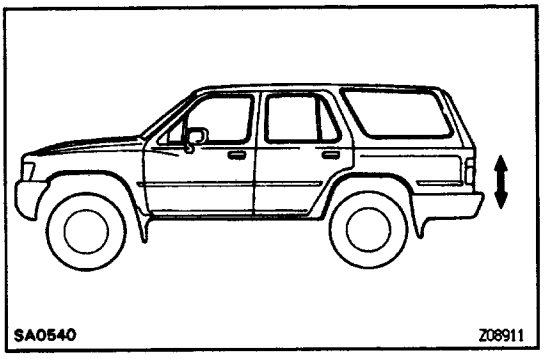

9. INSTALL WHEEL AND LOWER VEHICLE

Torque: 103 N–m (1,050 kgf–cm, 76 ft–lbf)

10. STABILIZE SUSPENSION

Bounce the vehicle up and down to several times to stabilize the suspension.

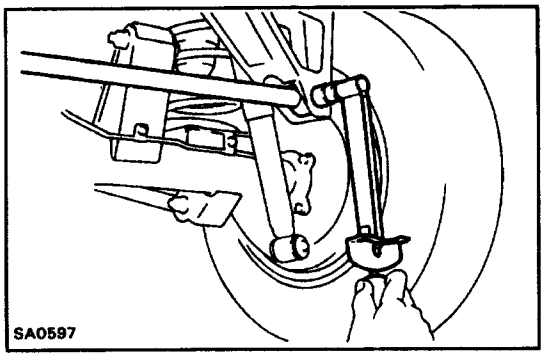

11. TIGHTEN LATERAL CONTROL ROD NUT

(a) Jack up the rear axle housing and support it with stands.

(b) Torque the lateral control rod nut.

Torque: 137 N–m (1.400 kgf/cm, 101 ft–lbf)

REAR SUSPENSION

DESCRIPTION

The rear suspension is a coil spring type suspension.

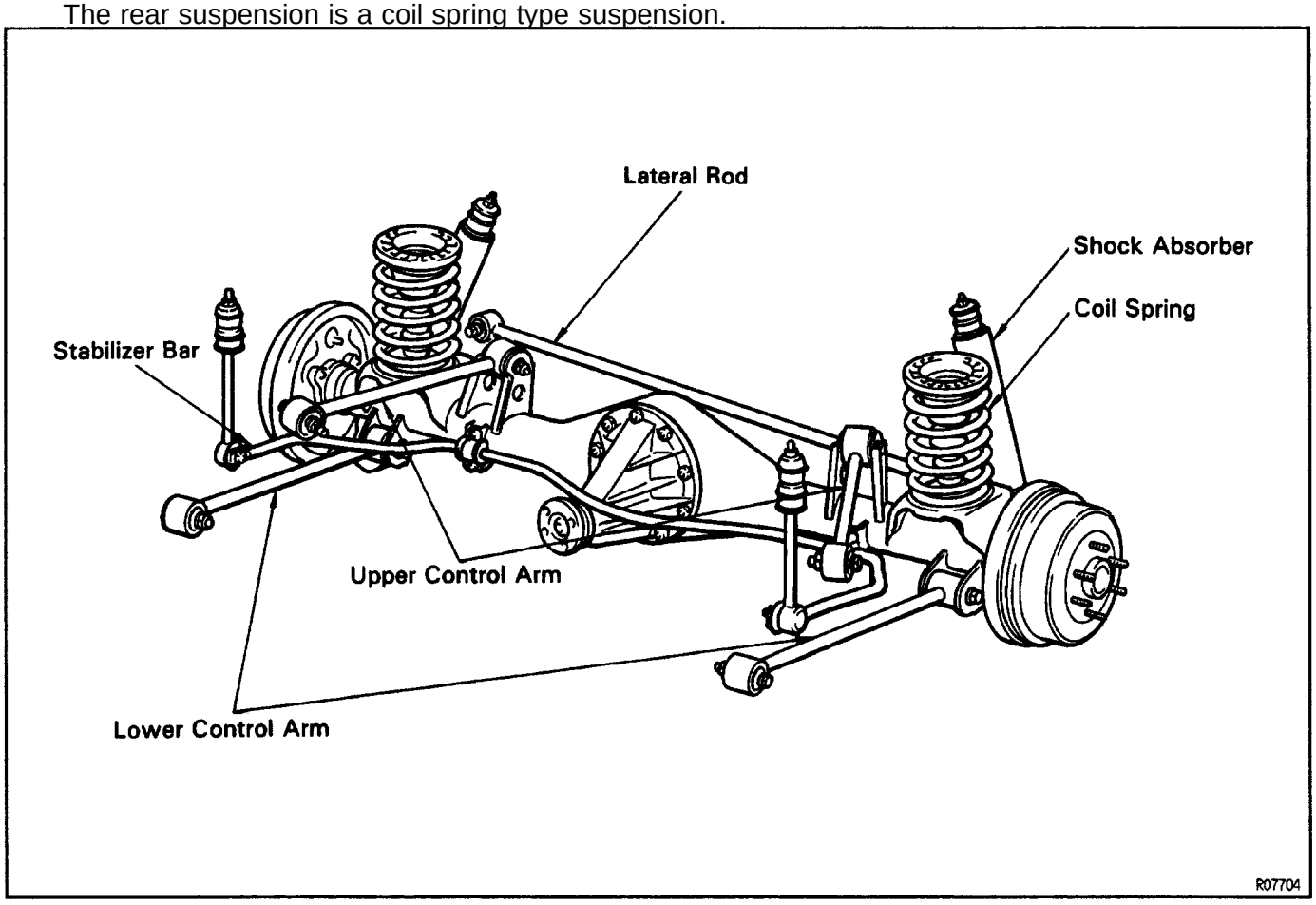

LATERAL CONTROL ROD
COMPONENTS

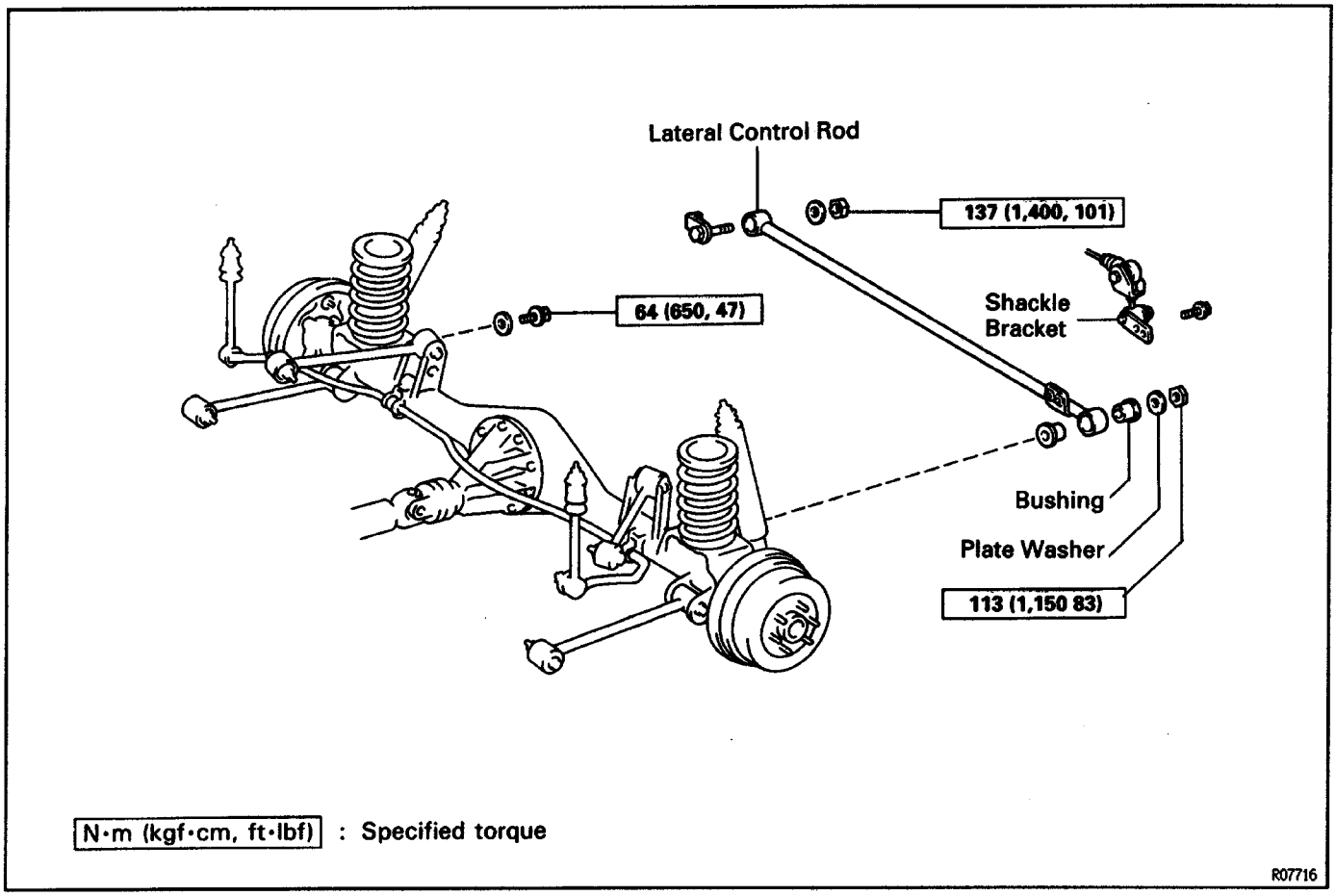

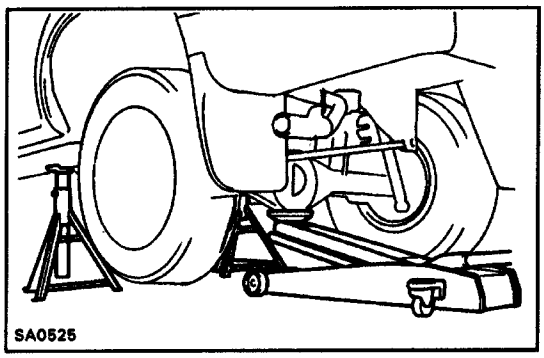

LATERAL CONTROL ROD REMOVAL

1. JACK UP AND SUPPORT VEHICLE

Jack up the rear axle housing and support the frame with stands. Hold the rear axle housing with a jack.

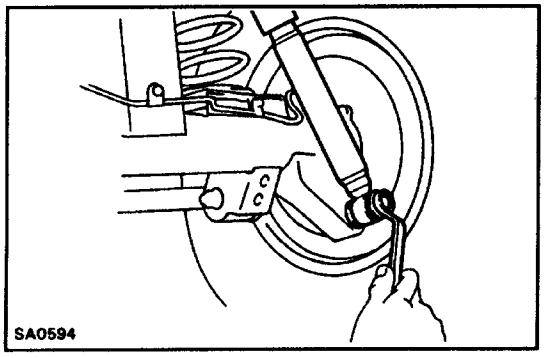

2. DISCONNECT RH SHOCK ABSORBER

Remove the bolt, washer and bushings, holding the RH shock absorber to the rear axle housing and disconnect the shock absorber.

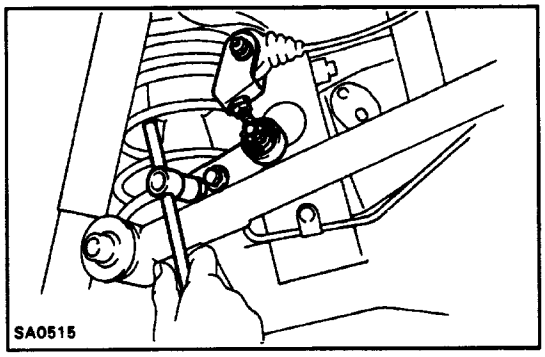

3. REMOVE LATERAL CONTROL ROD

(a) Remove the 2 bolts and disconnect the shackle bracket from the lateral control rod.

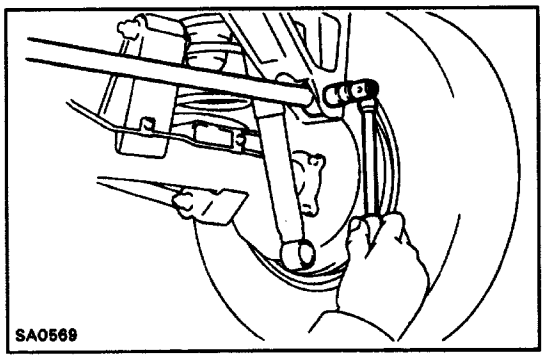

(b) Remove the nut, washer and bolt from the frame and disconnect the lateral control rod.

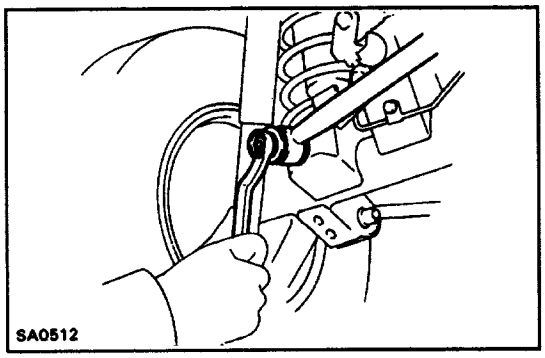

(c) Remove the nut, washer and bushings from the rear axle housing, and remove the lateral control rod.

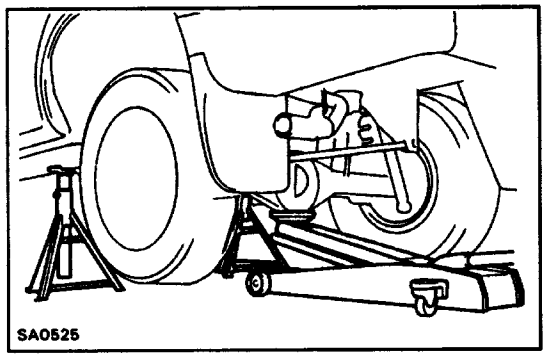

LATERAL CONTROL ROD INSTALLATION

1. INSTALL LATERAL CONTROL ROD

(a) Raise the axle housing until the frame is free from the stands.

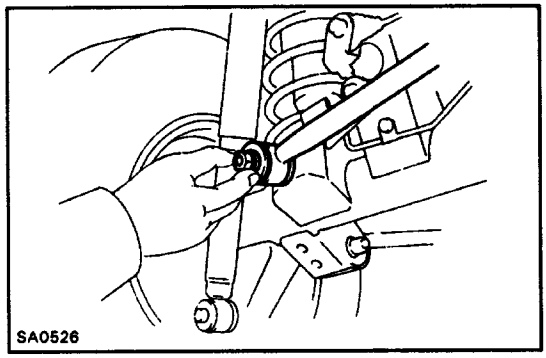

(b) In this order, install the bushing, lateral control rod, bushing, washer and nut on the rear axle housing.

HINT: Do not tighten the nut.

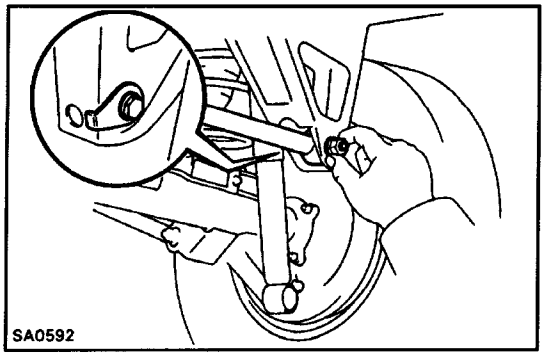

(c) Install the lateral control rod to the frame with the bolt, washer and nut.

HINT:
Install the bolt from the front of the vehicle (shock absorber side).
Do not tighten the nut.

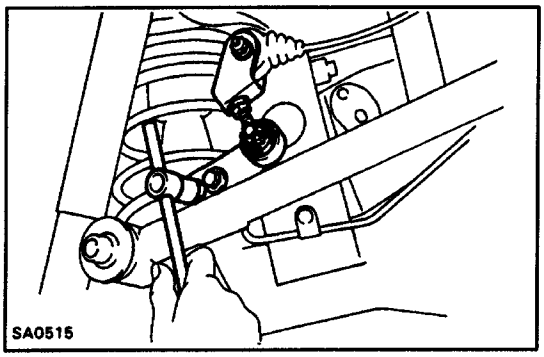

(d) Connect the shackle bracket to the lateral control rod with the 2 bolts.

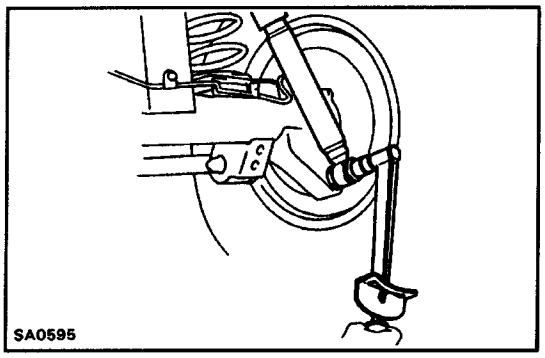

2. CONNECT RH SHOCK ABSORBER

Connect the shock absorber to the rear axle housing with the bushings, washer and bolt. Torque the bolt.
Torque: 64 N–m (650 kgf–cm, 47 ft–lbf)

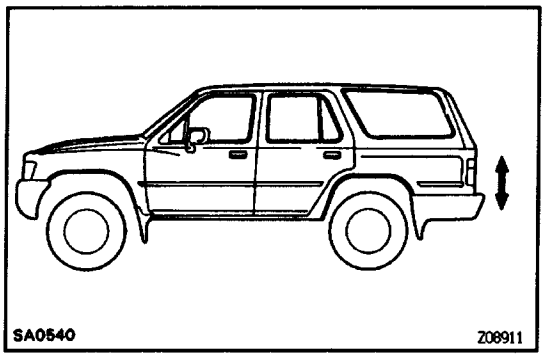

3. STABILIZE SUSPENSION

Bounce the vehicle up and down to several times to stabilize the suspension.

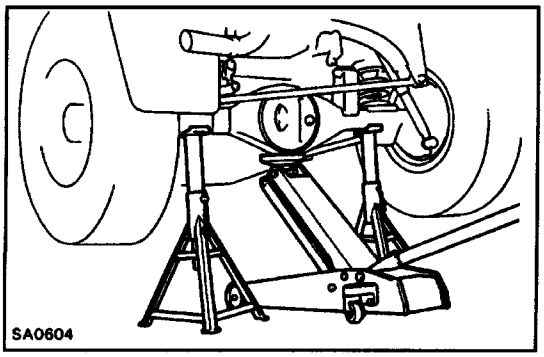

4. JACK UP AND SUPPORT VEHICLE

Jack up the rear axle housing and support it with stands.

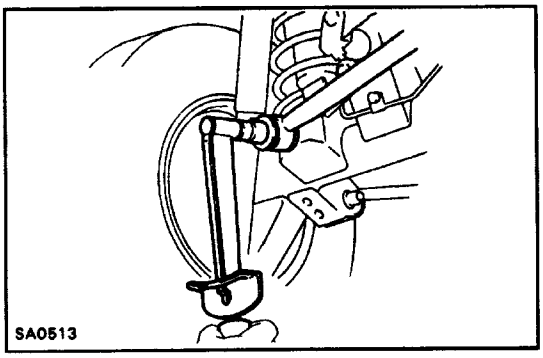

5. TIGHTEN NUT HOLDING LATERAL CONTROL ROD TO REAR AXLE HOUSING

Torque: 113 N–m (1,150 kgf–cm, 83 ft–lbf)

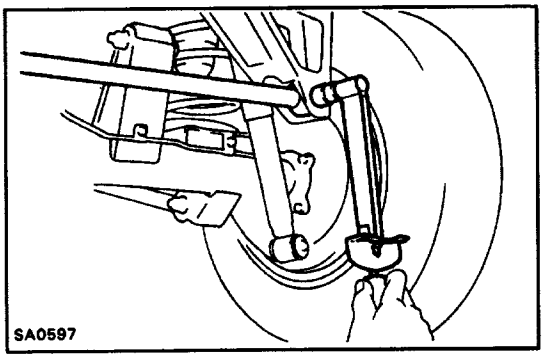

6. TIGHTEN NUT HOLDING LATERAL CONTROL ROD TO FRAME

Torque: 137 N–m (1,400 kgf–cm, 101 ft–lbf)

PREPARATION

EQUIPMENT

Torque wrench	

STABILIZER BAR
COMPONENTS

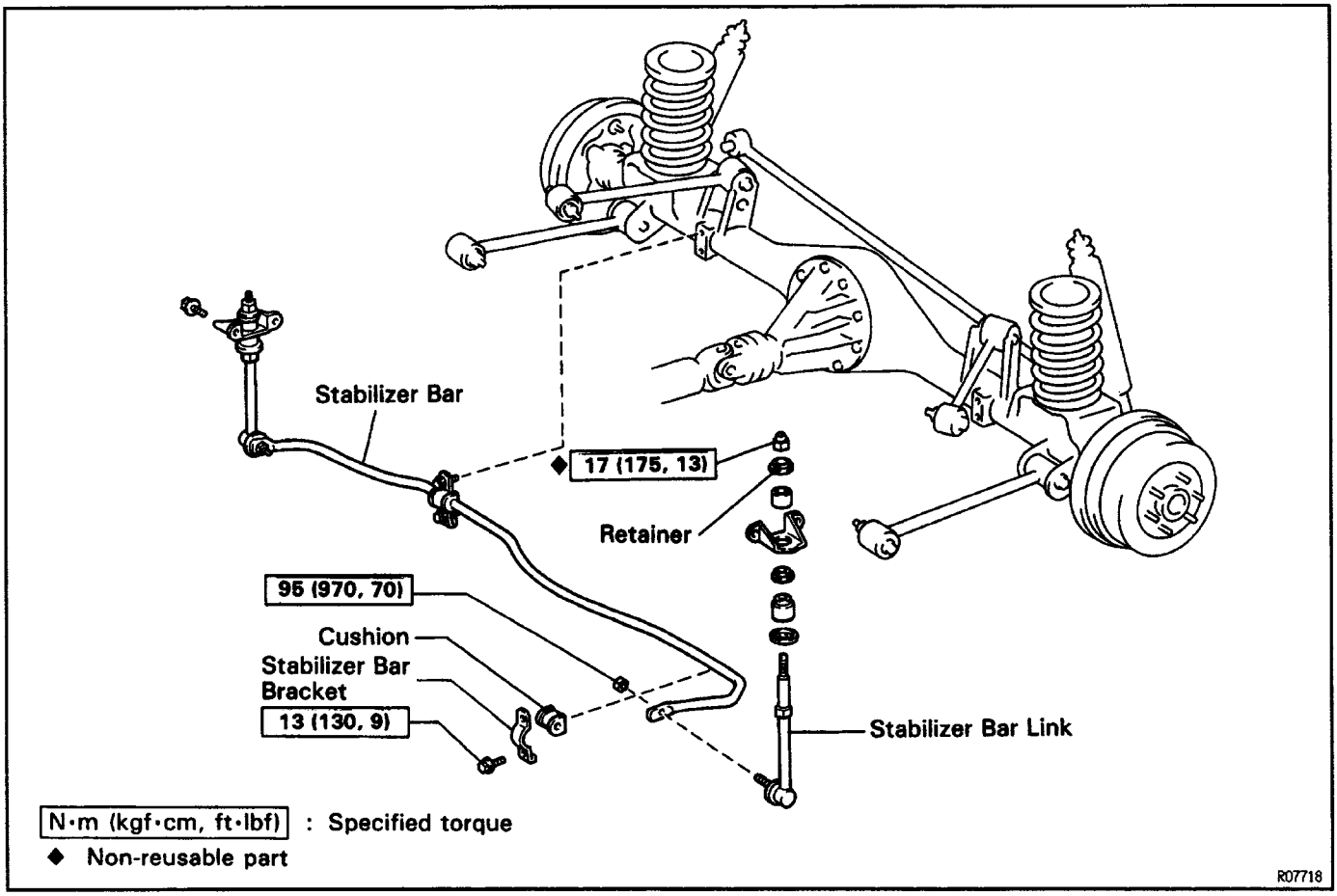

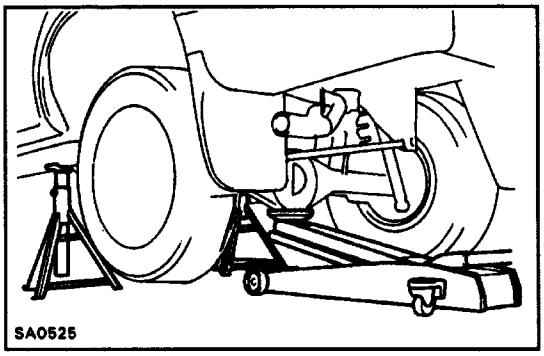

STABILIZER BAR REMOVAL

1. JACK UP AND SUPPORT VEHICLE

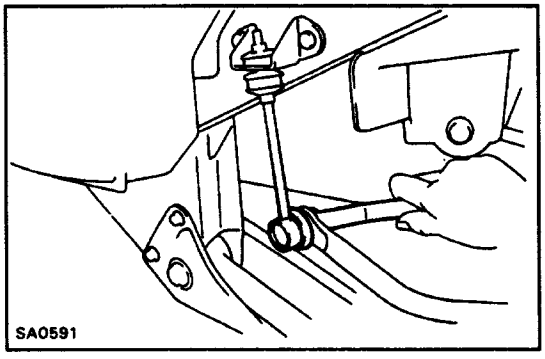

2. REMOVE BOTH STABILIZER BAR LINKS

(a) Remove the nuts and disconnect the stabilizer bar from the stabilizer bar links.

HINT: If the ball joint stud turns together with the nut, use a hexagon wrench to hold the stud.

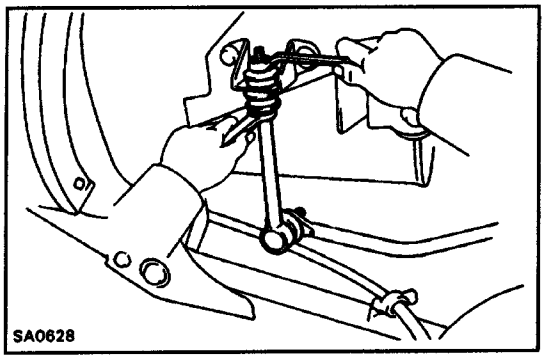

(b) Hold the stabilizer bar link with a wrench and remove the nuts, retainers, cushions and links.
(c) Remove the retainers and cushions from the stabilizer bar links.

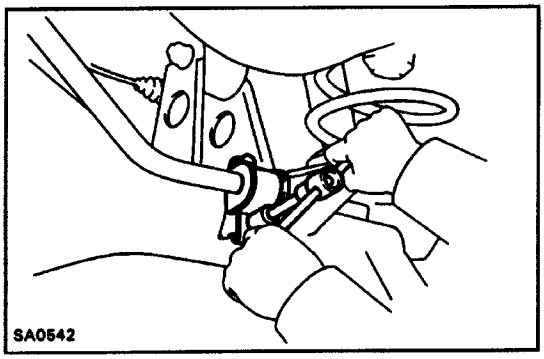

3. REMOVE STABILIZER BAR FROM REAR AXLE HOUSING

Remove the bolts and stabilizer bar with cushions and brackets.

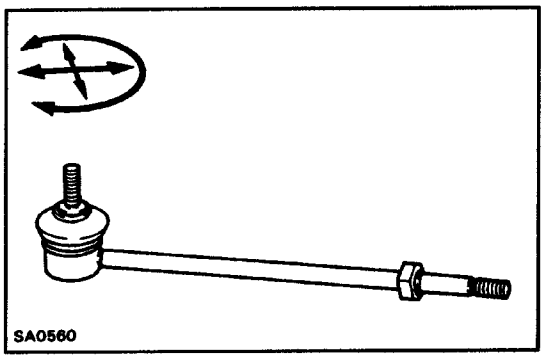

STABILIZER BAR LINK INSPECTION

INSPECT STABILIZER BAR LINK

Rotate the ball joint stud in all directions.

If the movement is not smooth and free, replace the stabilizer link.

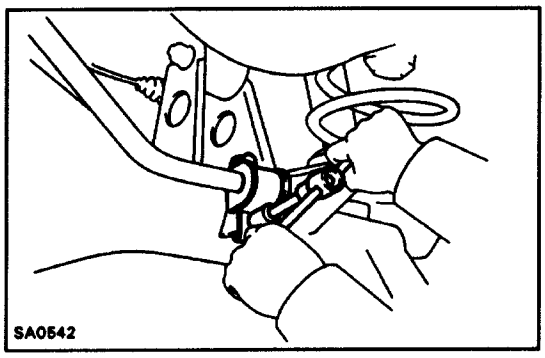

REAR STABILIZER BAR INSTALLATION

1. INSTALL STABILIZER TO REAR AXLE HOUSING

(a) Place the stabilizer bar to the rear axle housing.
(b) Install the cushions and brackets with the bolts.

Torque: 13 N–m (130 kgf–cm, 9 ft–lbf)

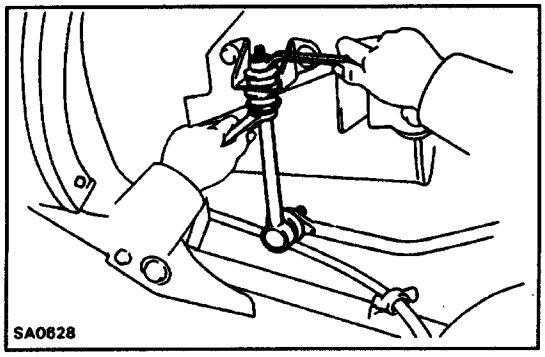

2. INSTALL BOTH STABILIZER BAR LINKS

(a) Install the retainers and cushions from the stabilizer bar links.
(b) Install the links, cushions and retainers onto the frame, as shown.

Torque: 17 N–m (175 kgf–cm, 13 ft–lbf)

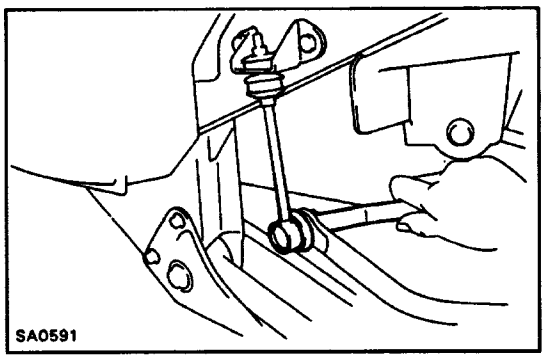

(c) Connect the both stabilizer bar to the links with the nuts.

Torque: 95 N–m (970 kgf–cm, 70 ft–lbf)

HINT: If the ball joint stud turns together with the nut, use a hexagon wrench to hold the stud.

3. LOWER VEHICLE

UPPER AND LOWER CONTROL ARM
COMPONENTS

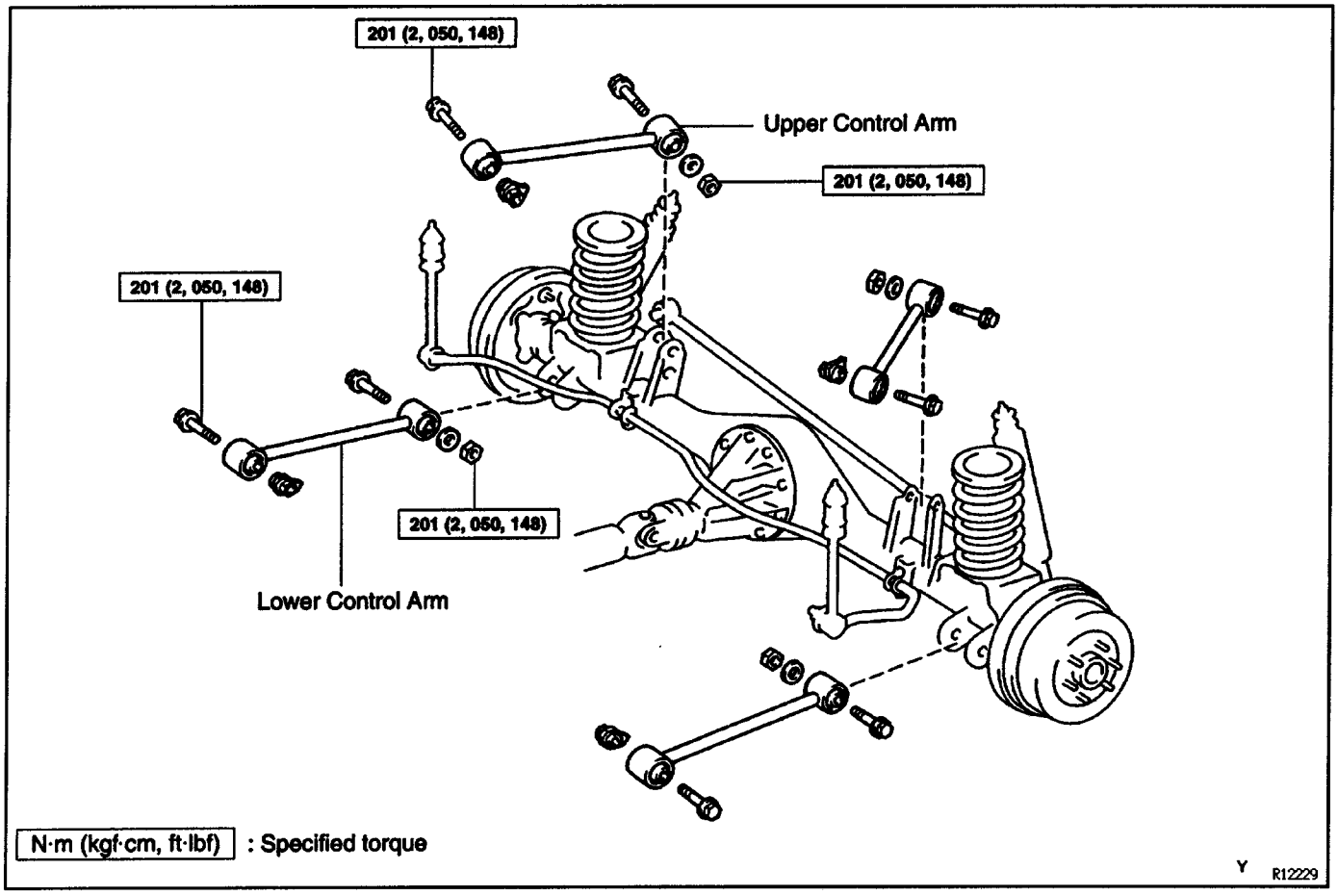

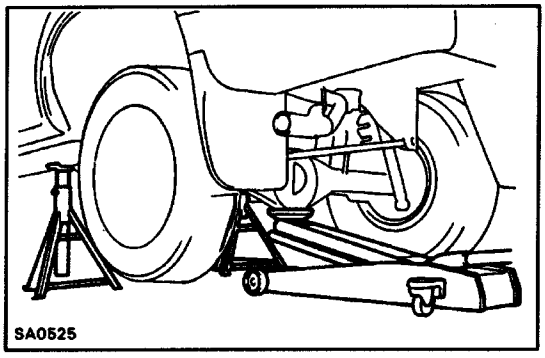

UPPER AND LOWER CONTROL ARMS

1. JACK UP AND SUPPORT VEHICLE

Jack up the rear axle housing and support the frame with stands.

Hold the rear axle housing with a jack.

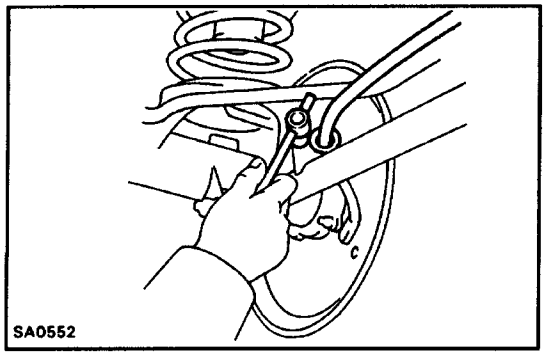

2. DISCONNECT PARKING BRAKE CABLE FROM LOWER CONTROL ARM

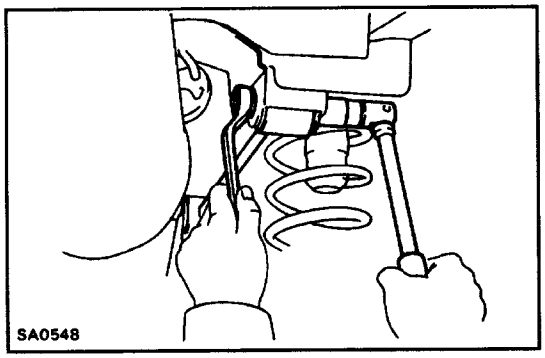

3. REMOVE UPPER CONTROL ARM

(a) Remove the nut, washer and bolt holding the upper control arm to the frame.

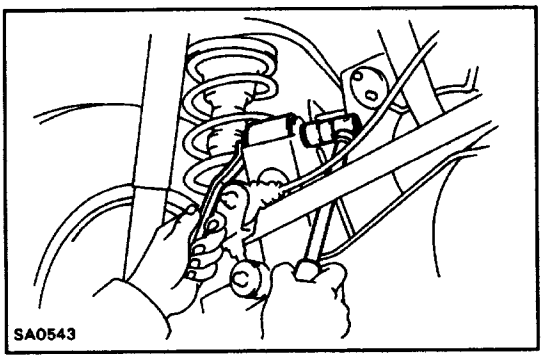

(b) Remove the nut, washer and bolt holding the upper control arm to the rear axle housing and remove the upper control arm.

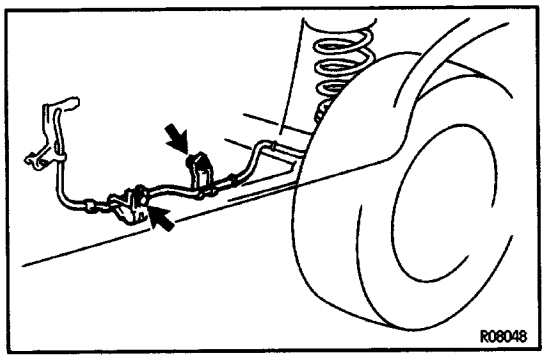

4. w/ 4 WHEEL ABS:

DISCONNECT REAR ABS SPEED SENSOR BRACKETS FROM LOWER CONTROL ARM

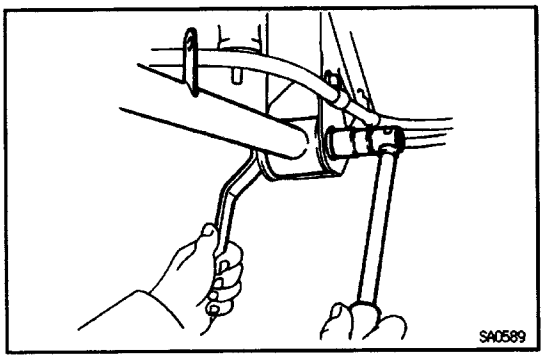

5. REMOVE LOWER CONTROL ARM

(a) Remove the nut and bolt holding the lower control arm to the frame.

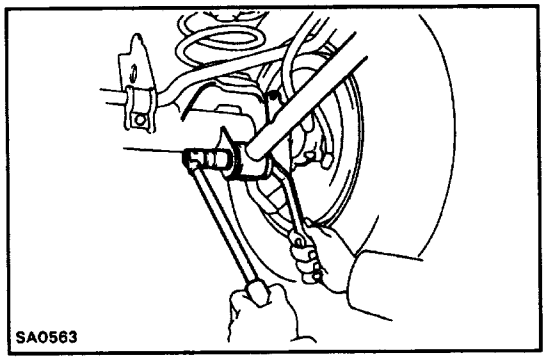

(b) Remove the nut, washer and bolt holding the lower control arm to the rear axle housing and remove the lower control arm.

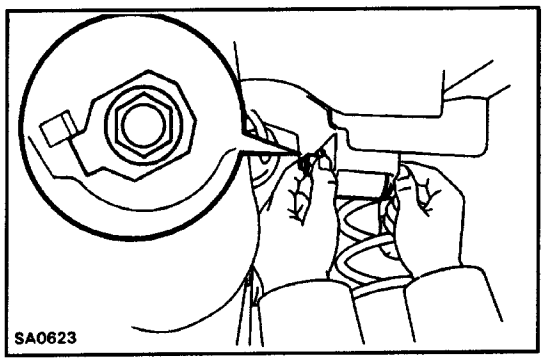

UPPER AND LOWER CONTROL ARMS INSTALLATION

1. INSTALL UPPER CONTROL ARM

(a) Install the upper control arm on the frame with the bolt and nut.

HINT:

- Install the bolt from the outside of the vehicle.
- Do not tighten the bolt.

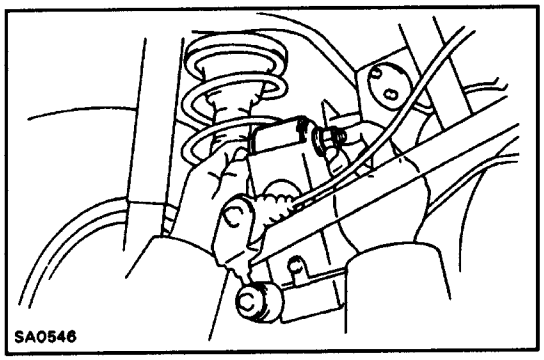

(b) Install the upper control arm on the rear axle housing with the bolt, washer and nut.

HINT:

- Install the bolt from the outside of the vehicle.
- Do not tighten the nut.

2. INSTALL LOWER CONTROL ARM

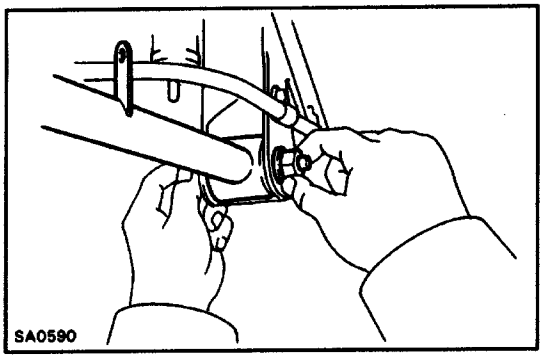

(a) Install the lower control arm on the frame with the bolt and nut.

HINT:

Install the bolt from the outside of the vehicle.

Do not tighten the nut.

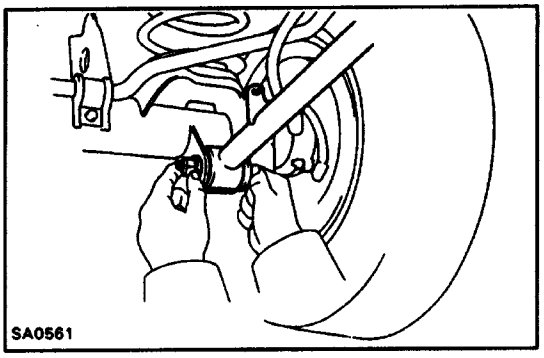

(b) Install the lower control arm on the rear axle housing with the bolt, washer and nut.

HINT:

- Install the bolt from the outside of the vehicle.
- Do not tighten the nut.

Torque: 28 N–m (290 kgf–cm, 21 ft–lbf)

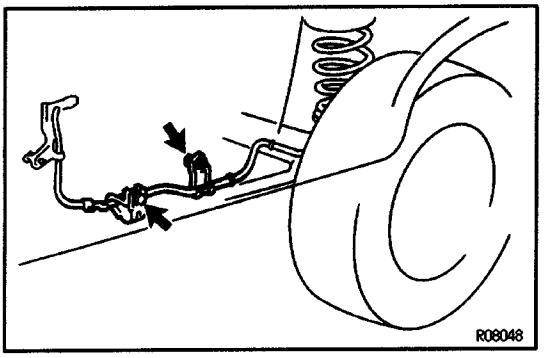

3. w/ 4 WHEEL ABS:

CONNECT REAR ABS SPEED SENSOR BRACKETS TO LOWER CONTROL ARM

Torque: 13 N–m (130 kgf–cm. 9 ft–lbf)

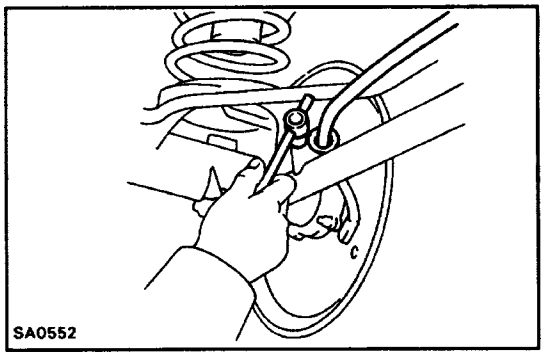

4. CONNECT PARKING BRAKE CABLE TO LOWER CONTROL ARM

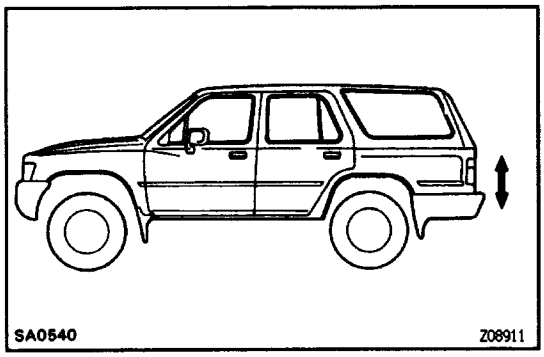

5. STABILIZE SUSPENSION

Bounce the vehicle up and down sever–al times to stabilize the suspension.

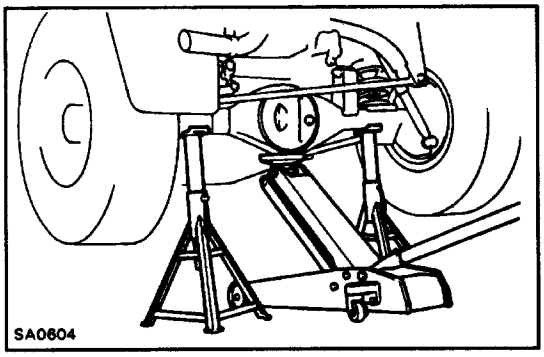

6. JACK UP VEHICLE

Jack up the rear axle housing and support it with stands.

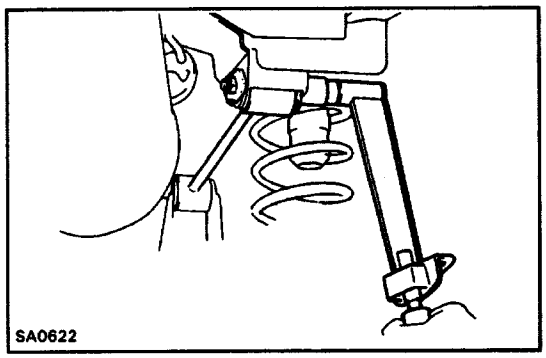

7. TIGHTEN BOLT HOLDING UPPER CONTROL ARM TO FRAME

Torque: 201 N–m (2,050 kgf–cm, 148 ft–lbf)

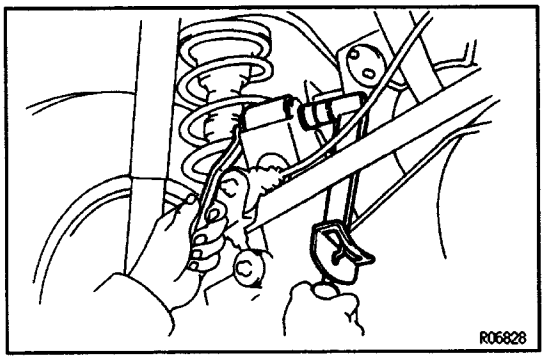

8. TIGHTEN BOLT AND NUT HOLDING UPPER CONTROL ARM TO REAR HOUSING

Torque: 201 N–m (2,050 kgf–cm, 148 ft–lbf)

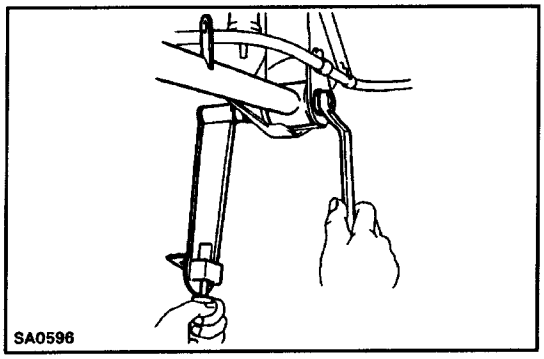

9. TIGHTEN BOLT AND NUT HOLDING LOWER CONTROL ARM TO FRAME

Torque: 201 N–m (2,050 kgf–cm. 148 ft–lbf)

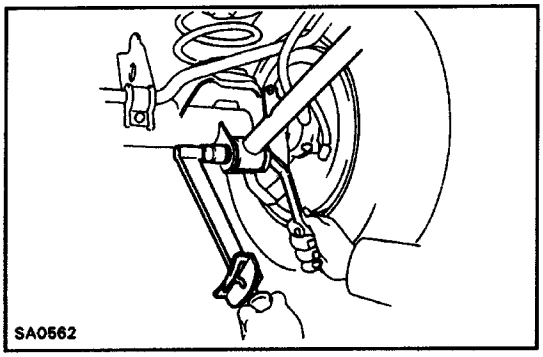

10. TIGHTEN BOLT AND NUT HOLDING LOWER CONTROL ARM TO REAR AXLE HOUSING

Torque: 201 N–m (2,050 kgf–cm, 148 ft–lbf)

SERVICE SPECIFICATIONS

SERVICE DATA

(Front)

Cold tire inflation pressure	tire size		Pressure	Front	kPa (kgf/cm², psi) Rear
	P225/75R15		180 (1.8, 26)		200 (2.0, 29)
	31 x 10.5R15LT				
Front wheel alignment Set suspension arm in loaded vehicle condition	Difference between the height at center of tip of spindle Front of steering knuckle and the height at center of tip of front side adjusting cam bolt				58.5 mm (2.303 in.)
	Difference between the height of center of lower Rear control arm front bushing and the height of center off rear axle shaft				36.0 mm (1.417 in.)
	Camber	Left–right error	0°45′ ± 45′ 30′ or less		
	Caster	Left–right error	2°30′ ± 45′ 30′ or less		
	Steering axis inclination Left–right error		11°45′ ± 45′ 30′ or less		
	Toe–in		1 ± 2 mm (0.04 ± 0.08 in.)		
	Wheel angle	Max. Inside wheel Outside wheel At 20° (outside wheel)	32°00′ +1° −2° 31°00′ (Reference) 21°10′ (Inside wheel)		

	Model	tire size	Height mm (in.) * Front	* Rear	Caster	toe–in mm (in.)
Front wheel alignment Set suspension arm in nonloaded vehicle condition	RN130L –GKLSEA	P225/75R15	283.1 (11.15)	335.2 (13.20)	1°46′ ± 45′	1.94 ± 2 (0.0764 ± 0.08)
	VZN 120L –G KPG EA	P225/75R15	283.3 (11.15)	337.3 (13.28)	1°43′ ± 45′	1.93 ± 2 (0.0760 ± 0.08)
	VZN 130L –GKMGEA	P225/75R15	280.3 (11.04)	331.6 (13.06)	1°47′ ± 45′	1.93 ± 2 (0.0760 ± 0.08)
		31 x 10.5R15	307.2 (12.09)	359.3 (14.15)	1°46′ ± 45′	1.93 ± 2 (0.0760 ± 0.08)
	VZN 130L –GKPGEA	P225/75R15	279.9 (11.02)	330.5 (13.01)	1°48′ ± 45′	1.94 ± 2 (0.0764 ± 0.08)
		31 x 10.5R15	306.9 (12.08)	358.2 (14.10)	1°47′ ± 45′	1.94 ± 2 (0.0764 ± 0.08)
	RN 131L –RKLSEK	P225/75R15	282.1 (11.11)	335.0 (13.19)	1°46′ ± 45′	1.86 ± 2 (0.0732 ± 0.08)
	RN131L –RKPSEK	P225/75R15	281.5 (11.08)	333.3 (13.12)	1°47′ ± 45′	1.87 ± 2 (0.0736 ± 0.08)
	vzN131 –RKMGEK	P225/75R15	278.9 (10.98)	332.5 (13.09)	1°45′ ± 45′	1.87 ± 2 (0.0736 ± 0.08)
		31 x 10.5R15	305.8 (12.04)	360.2 (14.18)	1°44′ ± 45′	1.87 ± 2 (0.0736 ± 0.08)
	VZN131L –RKPGEK	P225/75R15	280.2 (11.03)	324.6 (12.78)	1°59′ ± 45′	1.87 ± 2 (0.0736 ± 0.08)
		31 x 10.5R15	307.1 (12.09)	352.3 (13.87)	1°57′ ± 45′	1.87 ± 2 (0.0736 ± 0.08)
	Camber Camber left–right error Caster left–right error Steering axis inclination Steering axis inclination left–right error Wheel angle Max. Inside wheel Outside wheel At 20° (Outside wheel)		0°43′ ± 45′ 30′ or less 30′ or less 11°52′ ± 45′ 30′ or less 32°00′ +1° −2° 31°00′ (Reference) 21°10′ (Inside wheel)			

* Front: Height at center of tip of front side adjusting cam bolt

* Rear: Height at center of lower control arm front bushing

SPECIFICATIONS (Front)

Tire runout	Maximum	3.0 mm	0.118 in.
Wheel balance		Unbalance after adjustment 15.0 g (0.033 lb) or less	
Wheel bearing preload (starting) (rotating load at hub bolt)		28 – 56 N	2.9 – 5.7 kgf 6.4 – 12.6 lbf
Free wheeling hub ring oil clearance		0.3 mm	0.012 in.
Front drive shaft thrust clearance		0.075 – 0.690 mm	0.0030 – 0.0272 in.
	Maximum	1.0 mm	0.039 in.
Front drive shaft thrust clearance adjusting shim thickness		1.80 mm	0.0709 in.
		2.25 mm	0.0886 in.
Front drive shaft grease capacity	Outboard joint (black)	176 – 186 g	0.39 – 0.41 lb
	Inboard joint (brown)	270 – 280 g	0.60 – 0.62 lb
Front drive shaft length		393.9 – 403.9 mm	15.508 – 15.902 in.
Front differential drive pinion bearing preload (starting)			
	New bearing	1.2 – 1.9 N·m 12 – 19 kgf·cm	10.4 – 16.5 in.·lbf
	Reused bearing	0.6 – 1.0 N·m 6 – 10 kgf·cm	5.2 – 8.7 in.·lbf
Front differential companion flange deviation			
	Maximum vertical runout	0.10 mm	0.0039 in.
	Maximum lateral runout	0.10 mm	0.0039 in.
Front differential ring gear runout	Maximum	0.07 mm	0.0028 in.
Front differential ring gear backlash		0.13 – 0.18 mm	0.0051 – 0.0071 in.
Front differential preload (starting)	Total preload	Add drive pinion preload 0.4 – 0.6 N·m 4 – 6 kgf·cm	3.5 – 5.2 in.·lbf
Front differential side gear backlash		0.05 – 0.20 mm	0.0020 – 0.0079 in.
Front differential side gear backlash adjusting washer thickness		0.96 – 1.04 mm	0.0378 – 0.0409 in.
		1.06 – 1.14 mm	0.0417 – 0.0449 in.
		1.16 – 1.24 mm	0.0457 – 0.0488 in.
		1.26 – 1.34 mm	0.0496 – 0.0528 in.
Front differential backlash or side bearing preload thrust washer thickness		2.57 – 2.59 mm	0.1012 – 0.1020 in.
		2.60 – 2.62 mm	0.1024 – 0.1031 in.
		2.63 – 2.65 mm	0.1035 – 0.1043 in.
		2.66 – 2.68 mm	0.1047 – 0.1055 in.
		2.69 – 2.71 mm	0.1059 – 0.1067 in.
		2.72 – 2.74 mm	0.1071 – 0.1079 in.
		2.75 – 2.77 mm	0.1083 – 0.1091 in.
		2.78 – 2.80 mm	0.1094 – 0.1102 in.
		2.81 – 2.83 mm	0.1106 – 0.1114 in.
		2.84 – 2.86 mm	0.1118 – 0.1126 in.
		2.87 – 2.89 mm	0.1130 – 0.1138 in.
		2.90 – 2.92 mm	0.1142 – 0.1150 in.
		2.93 – 2.95 mm	0.1154 – 0.1161 in.
		2.96 – 2.98 mm	0.1165 – 0.1173 in.
		2.99 – 3.01 mm	0.1177 – 0.1185 in.
		3.02 – 3.04 mm	0.1189 – 0.1197 in.
		3.05 – 3.07 mm	0.1201 – 0.1209 in.
		3.08 – 3.10 mm	0.1213 – 0.1220 in.

Front differential backlash or side bearing preload thrust washer thickness (cont'd)	3.11 – 3.13 mm	0.1224 – 0.1232 in.
	3.14 – 3.16 mm	0.1236 – 0.1244 in.
	3.17 – 3.19 mm	0.1248 – 0.1256 in.
	3.20 – 3.22 mm	0.1260 – 0.1268 in.
	3.23 – 3.25 mm	0.1272 – 0.1280 in.
Front differential drive pinion plate washer thickness	2.24 mm	0.0882 in.
	2.27 mm	0.0894 in.
	2.30 mm	0.0906 in.
	2.33 mm	0.0917 in.
	2.36 mm	0.0929 in.
	2.39 mm	0.0941 in.
	2.42 mm	0.0953 in.
	2.45 mm	0.0965 in.
	2.48 mm	0.0976 in.
	2.51 mm	0.0988 in.
	2.54 mm	0.1000 in.
	2.57 mm	0.1012 in.
	2.60 mm	0.1024 in.
	2.63 mm	0.1035 in.
	2.66 mm	0.1047 in.
	2.69 mm	0.1059 in.
	2.72 mm	0.1071 in.
Front differential rear oil seal drive in depth	1.5 mm	0.059 in.
Clutch sleeve clearance (A.D.D.) Maximum	0.35 mm	0.0138 in.
Lower ball joint turning torque	3.0 – 5.9 N·m 30 – 60 kgf·cm 26 – 52 in.·lbf	

SPECIFICATIONS (Rear)

Rear axle shaft	Maximum shift runout	2.0 mm	0.079 in.
	Maximum flange runout	0.2 mm	0.008 in.
Differential	Drive pinion bearing preload (starting)		
	2 pinion type New bearing	1.9 – 2.5 N·m 19 – 26 kgf·cm 16.5 – 22.6 in.·lbf	
	2 pinion type Reused bearing	0.9 – 1.3 N·m 9 – 13 kgf·cm 7.8 – 11.3 in.·lbf	
	4 pinion type New bearing	1.0 – 1.6 N·m 10 – 16 kgf·cm 8.7 – 13.9 in.·lbf	
	4 pinion type Reused bearing	0.5 – 0.8 N·m 5 – 8 kgf·cm 4.3 – 6.9 in.·lbf	
	Total preload (starting)	Add drive pinion bearing preload	
		0.4 – 0.6 N·m 4 – 6 kgf·cm 3.5 – 5.2 in.·lbf	
	Drive pinion to ring gear backlash	0.13 – 0.18 mm	0.0051 – 0.0071 in.
	Pinion gear to side gear backlash	0.05 – 0.20 mm	0.0020 – 0.0079 in.
	Ring gear runout Maximum	0.10 mm	0.0039 in.
	Companion flange deviation		
	Maximum vertical runout	0.10 mm	0.0039 in.
	Maximum lateral runout	0.10 mm	0.0039 in.
	Ring gear installing temperature	100°C	212°F

Differential (cont'd)	Side gear thrust washer thickness		
	2 pinion type	1.6 mm	0.063 in.
		1.7 mm	0.067 in.
		1.8 mm	0.071 in.
	4 pinion type	0.9 mm	0.035 in.
		1.0 mm	0.039 in.
		1.1 mm	0.043 in.
		1.2 mm	0.047 in.
		1.3 mm	0.051 in.
	Drive pinion adjusting plate washer thickness	1.70 mm	0.0669 in.
		1.73 mm	0.0681 in.
		1.76 mm	0.0693 in.
		1.79 mm	0.0705 in.
		1.82 mm	0.0717 in.
		1.85 mm	0.0728 in.
		1.88 mm	0.0740 in.
		1.91 mm	0.0752 in.
		1.94 mm	0.0764 in.
		1.97 mm	0.0776 in.
		2.00 mm	0.0787 in.
		2.03 mm	0.0799 in.
		2.06 mm	0.0811 in.
		2.09 mm	0.0823 in.
		2.12 mm	0.0835 in.
		2.15 mm	0.0846 in.
		2.18 mm	0.0858 in.
		2.21 mm	0.0870 in.
		2.24 mm	0.0882 in.
		2.27 mm	0.0894 in.
		2.30 mm	0.0906 in.
		2.33 mm	0.0917 in.
	Oil seal drive in depth	1.0 mm	0.039 in.

TORQUE SPECIFICATION (Front)

Part tightened	N·m	kgf·cm	ft·lbf
Knuckle stopper bolt look nut	47	480	35
Free wheeling hub body x Axle hub	31	315	23
Free wheeling hub body x Front drive shaft	18	185	13
Free wheeling hub body x Cover	10	100	7
Axle hub bearing look nut	47	480	35
Flange x Axle hub **4WD w/o free wheeling hub**	31	315	23
Hub grease cap x Axle hub **2WD**	12	120	9
Upper suspension arm x Upper ball joint	33	340	25
Upper ball joint x Steering knuckle	142	1,450	105
Steering knuckle arm x Steering knuckle	183	1,870	135
Lower suspension arm x Shock absorber	137	1,400	101
Lower suspension arm x Stabilizer bar	25	260	19
Lower suspension arm x Lower ball joint	142	1,450	105
Front drive shaft x Side gear shaft	83	845	61
Front differential front mounting bolt	147	1,500	108
Front differential rear left mounting bolt	167	1,700	123
Front differential rear right mounting bolt	167	1,700	123
Differential tube x Bracket	78	800	58
Front differential x Bracket	78	800	58
Ring gear x Differential case	97	985	71
Drive pinion x Companion flange	See page SA-75,100		
Differential carrier x Differential tube **w/o A.D.D.**	85	900	65
Differential carrier x Side bearing cap	78	800	58
Differential carrier x Carrier cover	47	475	34
A.D.D clutch case x Differential carrier	78	800	58
A.D.D clutch case x Differential tube	78	800	58
A.D.D clutch case cover x A.D.D.clutch case	21	210	15
Lower suspension arm x Frame	196	2,000	145
Upper suspension arm shaft x Frame	178	1,810	131
Upper suspension arm shaft lock nut	226	2,300	166
Upper suspension arm x Torque arm	87	890	64
Upper suspension arm x Upper bell joint	33	340	25
Shock absorber x Frame	25	250	18
Stabilizer bar bracket x Frame	29	300	22
Tie rod end clamp	22	225	16
ABS speed sensor x Steering knuckle **w/ 4 Wheel ABS**	7.8	80	69 in.·lbf
A6S speed sensor wire x Upper suspension arm **w/ 4 Wheel ABS**	5.4	55	48 in.·lbf

TORQUE SPECIFICATION (Rear)

Differential

Part tightened		N·m	kgf·cm	ft·lbf
Propeller shaft x Companion flange		74	750	54
Drive pinion x Companion flange		See Page SA–157		
LH differential case x RH differential case	4 pinion type	47	480	35
Ring gear x Differential case		97	985	71
Bearing cap x Differential carrier		78	800	58
Differential carrier x Axle housing		25	250	18
ABS speed sensor x Differential carrier	w/ Rear wheel ABS	19	195	14

Rear axle and suspension

Part tightened		N·m	kgf·cm	ft·lbf
Rear axle housing x Backing plate		69	700	51
Shock absorber x Frame		25	250	18
Shock absorber x Rear axle housing		64	650	47
Stabilizer bar bracket x Rear axle housing		13	130	9
Lateral control rod x Frame		137	1,400	101
Lateral control rod x Rear axle housing		113	1,150	83
Upper control arm x Frame		201	2,050	148
Upper control arm x Rear axle housing		201	2,050	148
Lower control arm x Flame		201	2,050	148
Lower control arm x Rear axle housing		201	2,050	148
Stabilizer bar link x Bracket		17	175	13
Stabilizer bar link x Stabilizer bar		95	970	70
ABS speed sensor x Rear axle housing	w/ 4 Wheel ABS	7.8	80	69 in.·lbf
ABS speed sensor wire x Lower control arm	w/ 4 Wheel ABS	13	130	9

SUSPENSION AND AXLE

TROUBLESHOOTING

Problem	Possible cause	Remedy	Page
Wanders/pulls	Tires worn or Improperly inflated	Inflate to proper pressure or replace tires	SA–3
	Alignment incorrect	Check front wheel alignment	SA–4
	Wheel bearing worn	Replace wheel bearing	SA–12
	Front or rear suspension parts loose or broken	Tighten or replace suspension parts	
	Steering linkage loose or worn	Tighten or replace steering linkage	
	Steering gear out of adjustment or broken	Adjust or repair steering gear	
Bottoming	Vehicle overloaded	Check loading	
	Shock absorber worn out	Replace shock absorber	SA–107
	Springs weak	Replace spring	SA–109
Sways/pitches	Tires improperly inflated	Inflate tires to proper pressure	SA–3
	Stabilizer bar bent or broken	Inspect stabilizer bar	SA–122
	Shock absorber worn out	Replace shock absorber	SA–107
Front wheel shimmy	Tires worn or improperly inflated	Replace tires or inflate to proper pressure	SA–3
	Wheels out of balance	Balance wheels	SA–3
	Shock absorber worn out	Replace shock absorber	SA–107
	Alignment incorrect	Check front alignment	SA–4
	Wheel bearing worn	Replace wheel bearings	SA–12
	Ball joints or bushings worn	Inspect ball joints and bushings	SA–120
	Steering linkage loose or worn	Tighten or replace steering linkage	
	Steering gear out of adjustment or broken	Adjust or repair steering gear	
Abnormal tire wear	Tires improperly inflated	Inflate tires to proper pressure	SA–3
	Shock absorbers worn out	Replace shock absorber	SA–107
	Alignment incorrect	Check toe–in	SA–4
	Suspension parts worn	Replace suspension parts	
Oil leak from rear axle	Oil seals worn or damaged	Replace oil seal	SA–127
	Bearing retainer loose	Replace retainer	SA–127
	Rear axle housing cracked	Repair as necessary	
Oil leak from pinion shaft	Oil level too high or wrong grade	Drain and replace oil	SA–52,143
	Oil seal worn or damaged	Replace oil seal	SA–46,139
	Companion flange loose or damaged	Tighten or replace flange	53,84 SA–144
Noises in axis	Oil level low or wrong grade	Drain and replace oil	SA–52,143
	Excessive backlash between pinion and ring or side gear	Check backlash	SA–154
	Ring, pinion or side gears worn or chipped	Inspect gears	
	Pinion shaft bearing worn	Replace bearing	
	Axle shaft bearing worn	Replace bearing	
	Differential bearing loose or worn	Tighten or replace bearings	SA–127

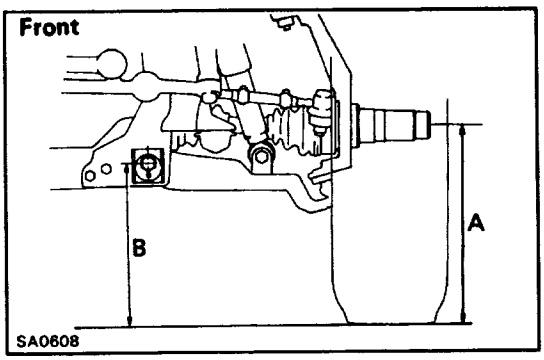

WHEEL ALIGNMENT

1. MEASURE VEHICLE HEIGHT

Front vehicle height:

A–B=58.5 mm (2.303 in.)

A:Height at center of tip of steering knuckle

B:Height at center of tip of front side adjusting cam bolt

NOTICE: Before inspecting the wheel alignment, adjust the vehicle height to specification.

HINT:With non–loaded vehicles, there is a difference in the vehicle height according to the model.

Although the wheel alignment standard value changes according to the vehicle height, by setting the vehicle height to the standard height the standard alignment value becomes the same for all models.

For the vehicle height of non–loaded vehicles for each model and the alignment standard values, refer to page SA–179.

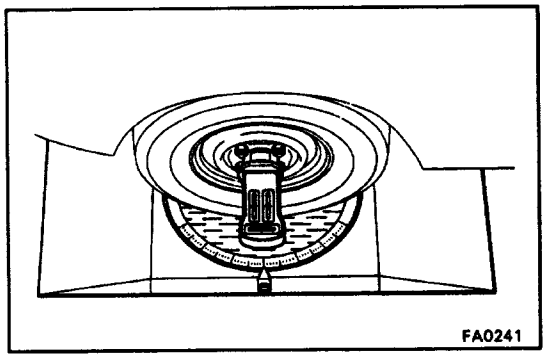

2. INSTALL CAM6AR – CASTER – KINGPIN GAUGE OR POSITION VEHICLE ON WHEEL ALIGNMENT TESTER

Follow the specific instructions of the equipment manufacturer.

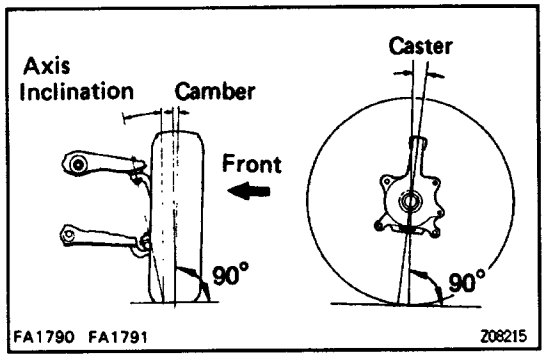

3. INSPECT CAMBER, CASTER AND STEERING AXIS INCLINATION

Camber	0°45′ ± 45′
Left–right error	30′ or less
Caster	2°30′ ± 45′
Left–right error	30′ or less
Steering axis inclination	11°45′ ± 45′
Left–right error	30′ or less

If the steering axis inclination is not as specified after camber and caster have been correctly adjusted, recheck the steering knuckle and front wheel for bending or looseness.

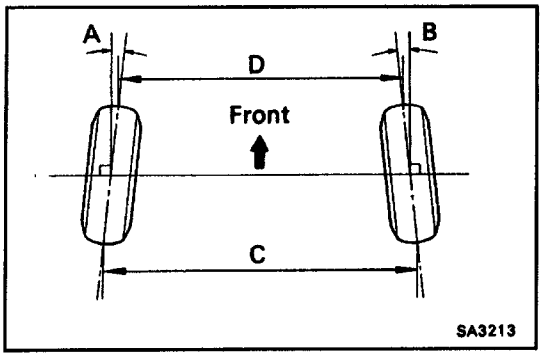

4. INSPECT TOE–IN

Toe–in:

A+B= 0.10 ± 0.20

C – D = 1 ± 2 mm (0.04 ± 0.08 in.)

If toe –in is not within specification, adjust the tie rod end.

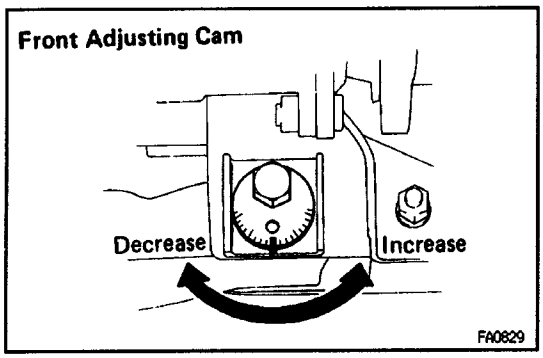

5. ADJUST CAMBER AND CASTER

If camber and/or caster are not within specification, adjust front and/or rear adjusting cams.

(See page SA–7 Adjustment Chart)

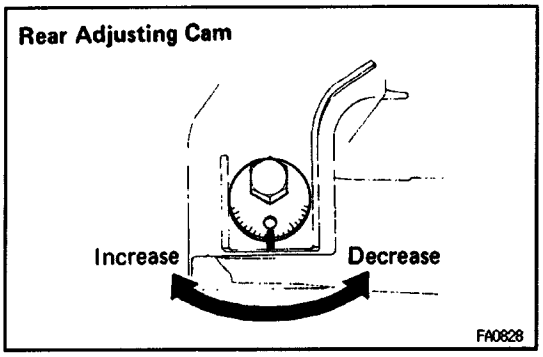

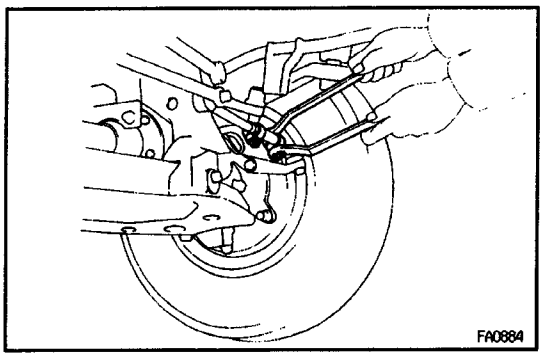

6. ADJUST TOE–IN

(a) Loosen the clamp bolts and nuts.

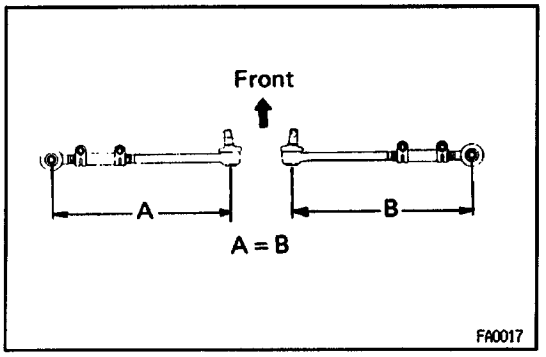

(b) Adjust toe–in by turning the left and right tie rod tubes an equal amount.

Toe–in:

A+B= 0.1° ± 0.1°

C – D = 1 ± 1 mm (0.04 ± 0.04 in.)

(c) Ensure that the lengths of the left and right tie rods are equal.

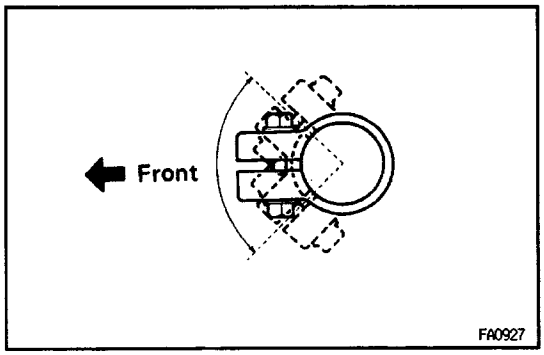

(d) Torque the clamp bolts and nuts.
Torque: 22 N–m (225 kgf–cm, 16 ft–lbf)
HINT: Face the clamp bolt toward the front of the vehicle.

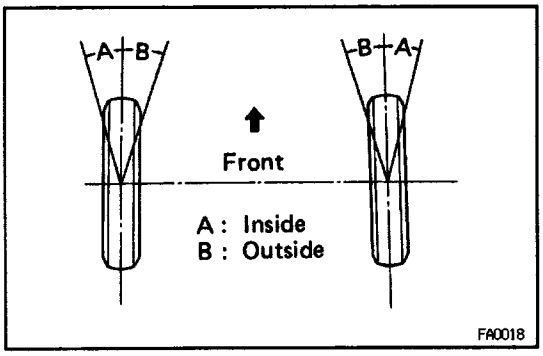

7. INSPECT WHEEL ANGLE

Remove the caps of knuckle stopper bolts and check the steering angles.
Wheel angle

Item	Inside wheel	Outside wheel (Reference)
Maximum	**32°00′ (30°00′ – 33°00′)**	**31°**
At 20°	**21°10′**	**20°**

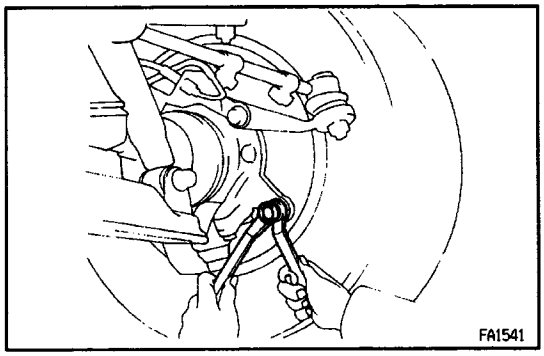

HINT: When the steering wheel is fully turned, make sure that the wheel is not touching the body or brake tube.
If maximum steering angles differ from standard value, adjust the wheel angle with the knuckle stopper bolts.
Torque: 47 N–m (480 k9f–cm, 35 ft–lbf)
If the wheel angle still cannot be adjusted within limits, inspect and replace damaged or worn steering parts.

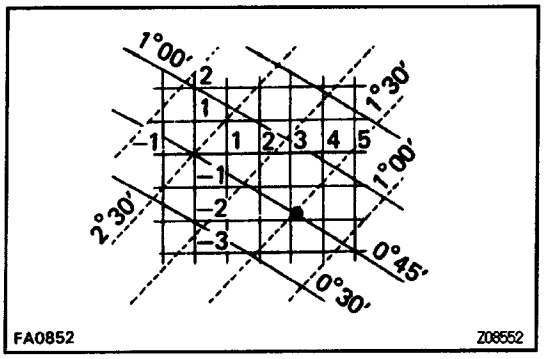

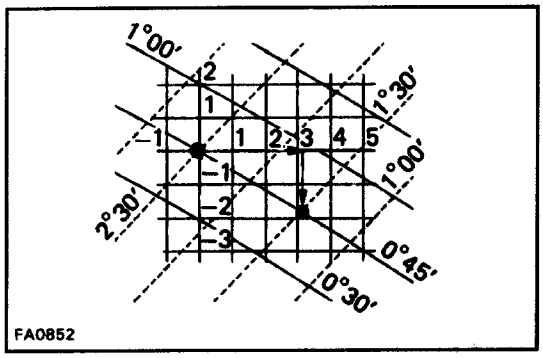

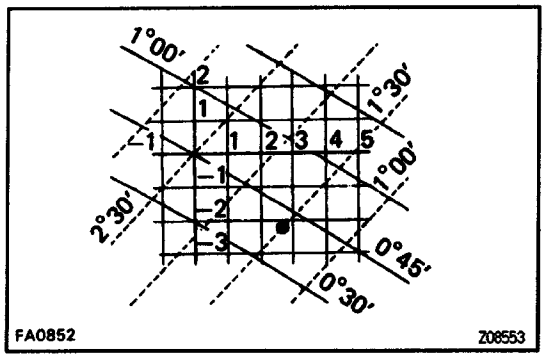

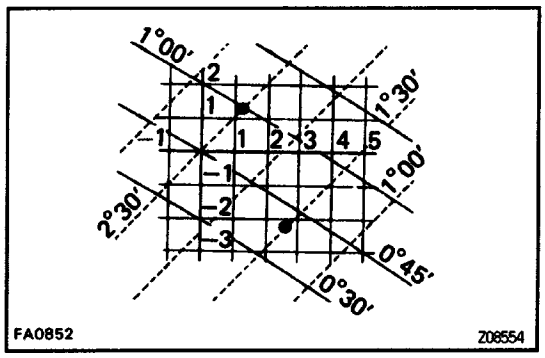

HOW TO READ ADJUSTMENT CHART

1. ALIGNMENT MEASURED WITH VEHICLE HEIGHT SET TO STANDARD HEIGHT FOR WHEEL ALIGNMENT INSPECTION

(a) Mark on the adjustment chart the alignment values measured with the vehicle at standard height.

Example:

Camber 0˚45'

Caster 1˚30'

(b) To calculate the amounts by which the front and/or rear cams are to be adjusted, read from the adjustment chart the distance from the center of the chart to the mark you have made, as shown in the illustration.

Example:

Front cam –1.8

Rear cam +3.1

(c) Torque the front and/or rear cam nuts.

Torque: 196 N–m (2.000 kgf.cm, 145 ft–lbf)

2. WHEEL ALIGNMENT MEASURED AT VEHICLE HEIGHT OF NON–LOADED VEHICLE

(a) Find the wheel alignment standard value applicable for the particular model in non–loaded condition.
(See page SA–179)

(b) Mark the selected standard value on the adjustment chart.

Example:

Camber 0˚40'

Caster 1˚30'

(c) Mark on the adjustment chart the alignment values measured at the non–loaded vehicle height.

Example:

Camber 1˚00'

Caster 2˚30'

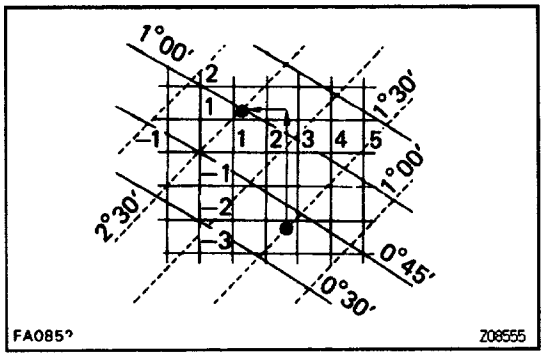

(d) As shown in the illustration, read the distance from the standard value to the measured value, and adjust the front and/or rear adjusting cams accordingly.

Example:

Front cam +3.4

Rear cam –1.6

(e) Torque the front and/or rear cam nuts.

Torque: 196 N–m (2,000 kgf–cm. 145 ft–lbf)

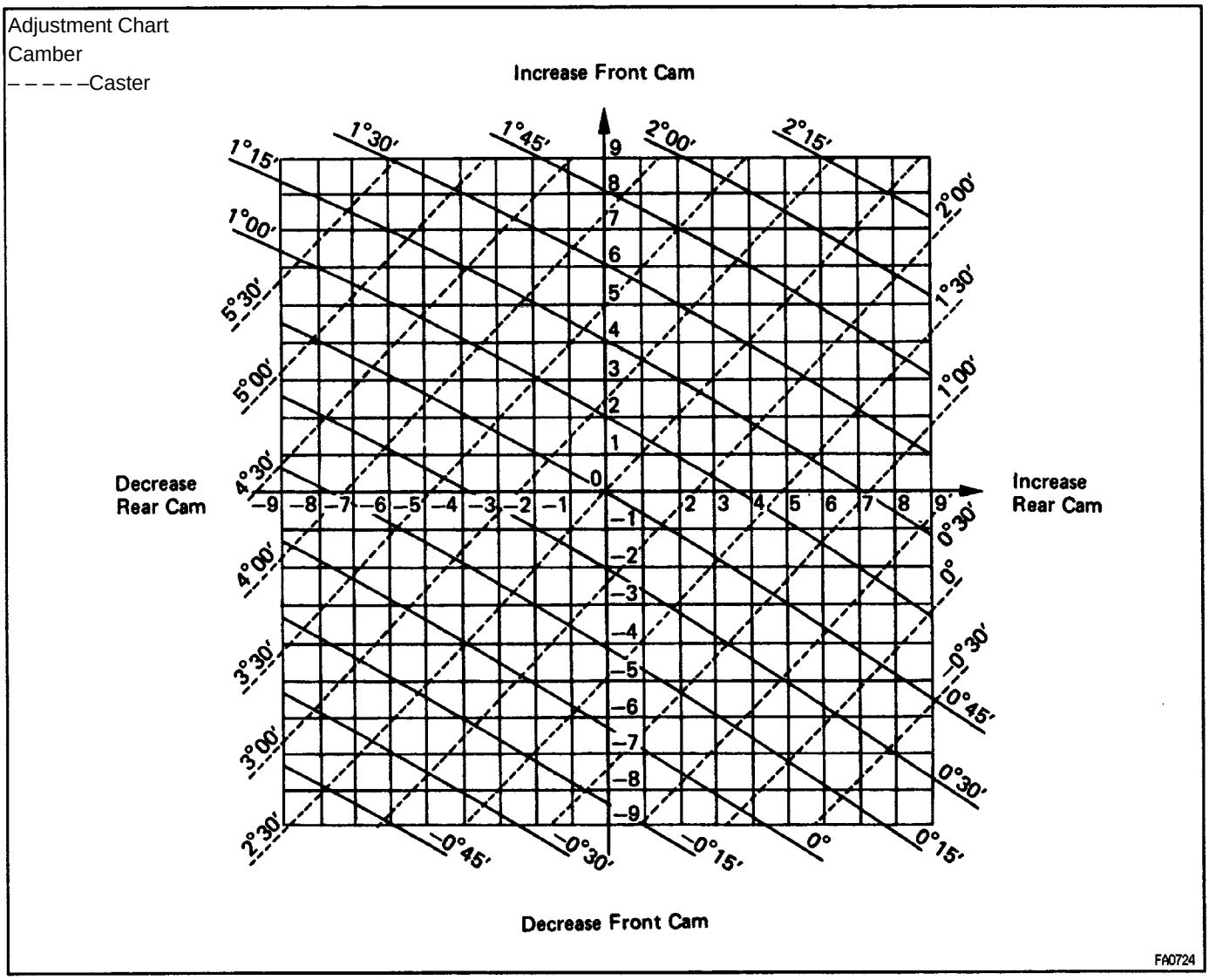

STEERING

GENERAL DESCRIPTION

Care must be taken to replace parts properly because they could affect the performance of the steering
system and result in a driving hazard.

TROUBLESHOOTING

Use the table below to help you find the cause of the problem. The numbers indicate the priority of the likely cause of the problem. Check each part in order. If necessary, replace these parts.

See page / Parts Name / Trouble	SA–3	SA–4	SR–29	SR–29	-	SA–120	-	-	SR–55	SA–12
	res (Improperly inflated)	Front wheel alignment (Incorrect)	Fluid level (Low)	Drive belt (Loose)	Steering system joints (Worn)	Suspension arm ball joints (Worn)	Steering column (Binding)	Sliding yoke (Worn)	Power Steering Gear	Front wheel bearing (Worn)
Hard steering	1	4	2	3	5	6	7		8	
Poor return	1	2					3		4	
Excessive play					1	2		3	5	4
Abnormal noise			1		2				3	

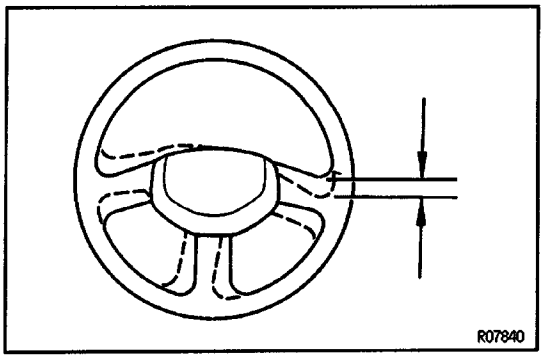

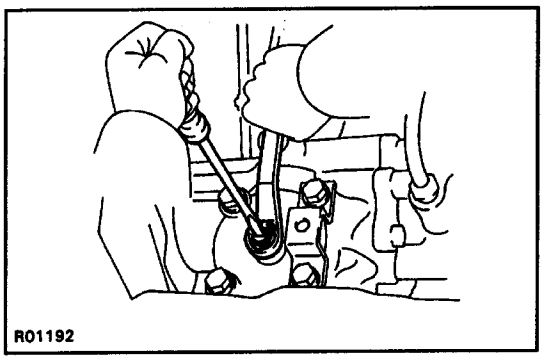

ON–VEHICLE INSPECTION

1. CHECK THAT STEERING WHEEL FREEPLAY IS CORRECT

With the vehicle stopped and tires pointed straight ahead, rock the steering wheel gently back and forth with light finger pressure.

Freeplay should not exceed the maximum.

Maximum freeplay:

30 mm (1.18 in.)

2. POINT WHEEL STRAIGHT AHEAD

3. ADJUST STEERING GEAR HOUSING

(a) Loosen the lock nut.

(b) Turn the adjusting screw clockwise to decrease wheel freeplay and counterclockwise to increase it.

HINT: Turn the adjusting screw in small increments and check the wheel freeplay between each adjustment.

4. CHECK THAT STEERING DOES NOT BIND

Turn the steering wheel half way around in both directions. Check that the freeplay is correct and steering is smooth and without rough spots.

5. HOLD ADJUSTING SCREW AND TIGHTEN LOCK NUT

POWER STEERING

DESCRIPTION

POWER STEERING PRINCIPLES

Power steering utilizing engine power to hydraulically reduce steering effort. Consequently, the engine is used to drive a pump to develop fluid pressure, and this pressure acts on a piston within the power cylinder so that the piston assists the rack or sector shaft effort. The amount of this assistance depends on the extent of pressure acting on the piston. Therefore, if more steering force is required, the pressure must be raised. The variation in the fluid pressure is accomplished by a control valve which is linked to the steering main shaft.

NEUTRAL (STRAIGHT–AHEAD) POSITION

Fluid from the pump is sent to the control valve. If the control valve is in the neutral position, all the fluid will flow through the control valve into the relief port and back to the pump. At this time, hardly any pressure is created and because the pressure on the cylinder or power piston is equal on both sides, the piston will not move in either direction.

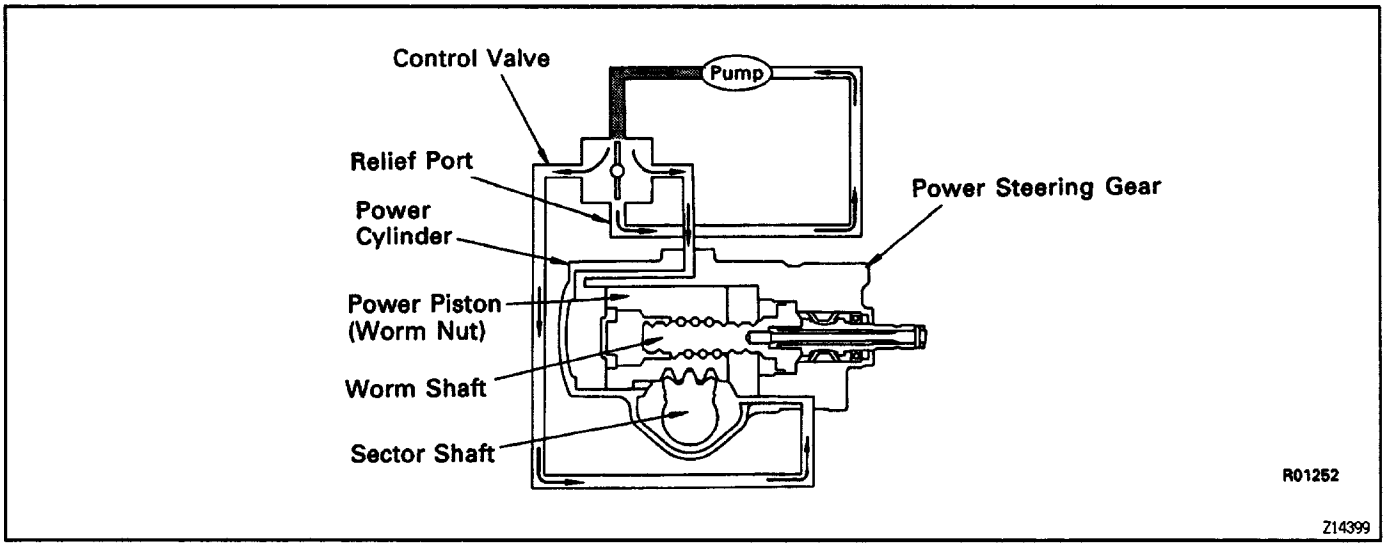

WHEN TURNING

When the steering main shaft is turned in either direction, the control valve also moves, closing one of the fluid passages. The –other passage then opens wider, causing a change in fluid flow volume and, at the same time, a differential pressure is created between both sides of the piston. Consequently the piston moves in the direction of the lower pressure so that the cylinder is forced back to the pump through the control valve.

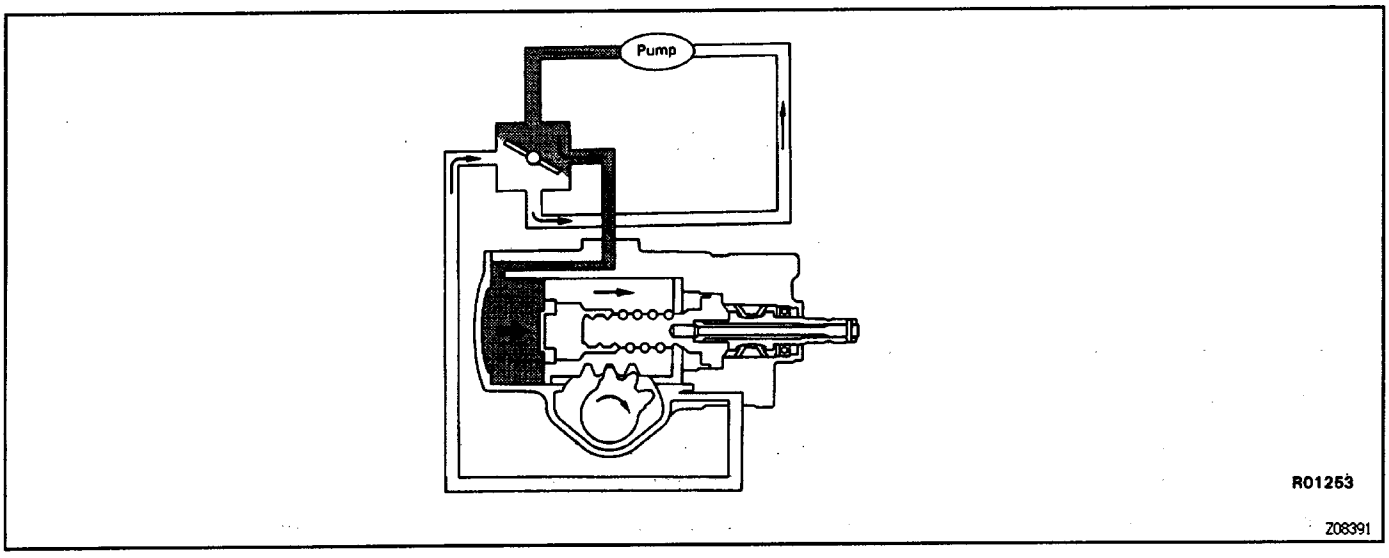

SERVICE HINT

Troubles with the power steering system are usually concerned with hard steering due to the fact that there is assistance. In such cases, attempting to make repairs, its necessary to determine whether the trouble lies with the pump or with the gear housing. To do this, an on–vehicle inspection can be made by using a pressure gauge.

ON–VEHICLE INSPECTION

Power steering is a hydraulic device and problems are normally due to insufficient fluid pressure acting on the piston. This could be caused by either the pump not producing the specified fluid pressure or the control valve in the gear housing not functioning properly so that the proper fluid pressure cannot be obtained.

If the fault lies with the pump, the same symptoms will generally occur whether the steering wheel is turned fully to the right or left. On the other hand, if the fault lies with the control valve, there will generally be a difference between the amount of assistance when the steering wheel is turned to the left and right, causing harder steering. However, if the piston seal of the power cylinder is worn, there will be a loss of fluid pressure whether the steering wheel is turned to the right or left and the symptoms will be the same for both.

Before performing an on–vehicle inspection, a check must first be made to confirm that the power steering system is completely free of any air. If there is any air in the system, the volume of this air will change when the fluid pressure is raised, causing a fluctuation in the fluid pressure so that the power steering will not function properly. To determine if there is any air in the system, check to see if there is a change of fluid level in the reservoir tank when the steering wheel is turned fully to the right or left.

For example, if there is air in the system, it will be compressed to a smaller volume when the steering wheel is turned, causing a considerable drop in the fluid level. If the system is free of air, there will be very little change in the level even when the fluid pressure is raised. This is because the fluid, being a liquid, does not change volume when compressed. The little change in the fluid level is due to expansion of the hoses between the pump and gear housing when pressure rises.

Also, air in the system sometimes result in an abnormal noise occurring from the pump or gear housing when the steering wheel is fully turned in either direction.

This on–vehicle inspection must be performed every time to ensure that the power steering system is working properly after overhauling or repairing the pump or gear housing.

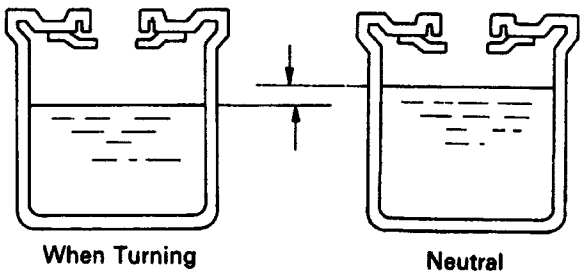

SR2392 SR2393

N00351

VANE PUMP

The main component parts of the vane pump, such as the cam ring, rotor, vanes and flow control valve are high precision parts and must be handled carefully. Also, because this pump produces a very high fluid pressure, O–rings are used for sealing each part. When reassembling the pump, always use new O–rings.

In the flow control valve, there is a relief valve which controls the maximum pressure of the pump. The amount of this maximum pressure is very important; if it is too low, there will be insufficient power steering assistance and if too high, it will have an adverse effect on the pressure hoses, oil seals, etc. If the maximum pressure is either too high or too low due to a faulty relief valve, do not disassemble or adjust the relief valve, but replace the flow control valve as an assembly.

The clearance between the flow control valve and pump body installation hole is very important. After manufacture, the factory measures the size of the installation hole and outer circumference of the flow control valve, and punches a mark accordingly. Therefore, when replacing the flow control valve, be sure to do so with one having the same mark in order to ensure the proper clearance.

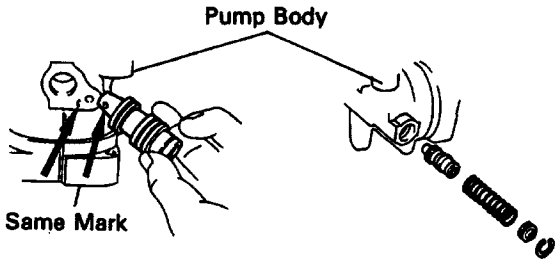

SR2394R SR2395

Z08392

The functional parts of the pump which produce fluid pressure are the cam ring, rotor and vanes, and these should be checked for wear. If the clearance between each is not within standard when reassembling, any worn parts should be replaced.
In this case, the replaced cam ring and rotor should be of the same length (have the same mark), and the vanes should be replaced with those having a length corresponding to that mark, otherwise the proper thrust clearance cannot be obtained. If there is too much thrust clearance, there will be insufficient fluid pressure at low speeds. If there is too little thrust clearance, it may result in seizure of the vanes.

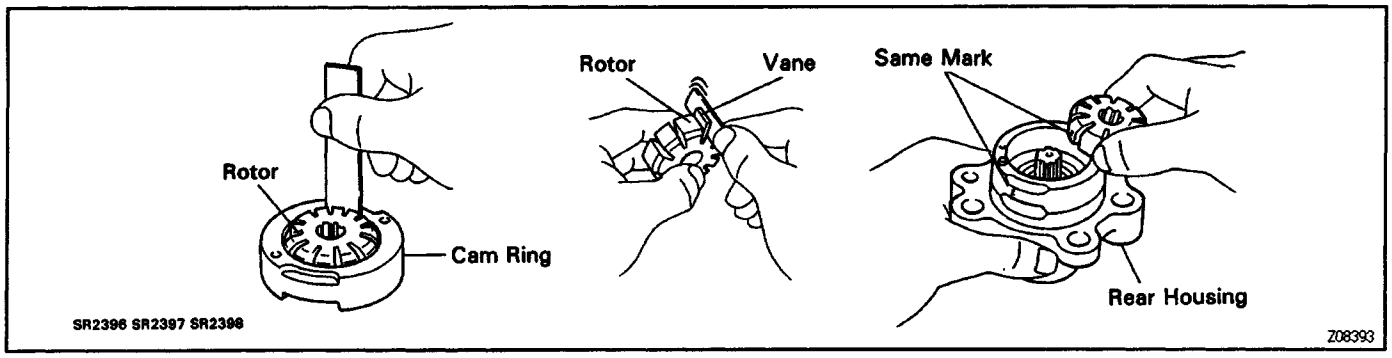

POWER STEERING GEAR

Because of the high pressure, even the slightest scratch will cause fluid leakage, resulting in an inoperative power steering system.
Teflon rings are used for the piston, cross shaft and control valve. These teflon rings are highly durable against wear, but if it is necessary to replace them, be careful not so stretch the new ones. After installing a teflon ring into its groove, snug it down into the groove before assembly of the cylinder or housing to prevent possible damage.

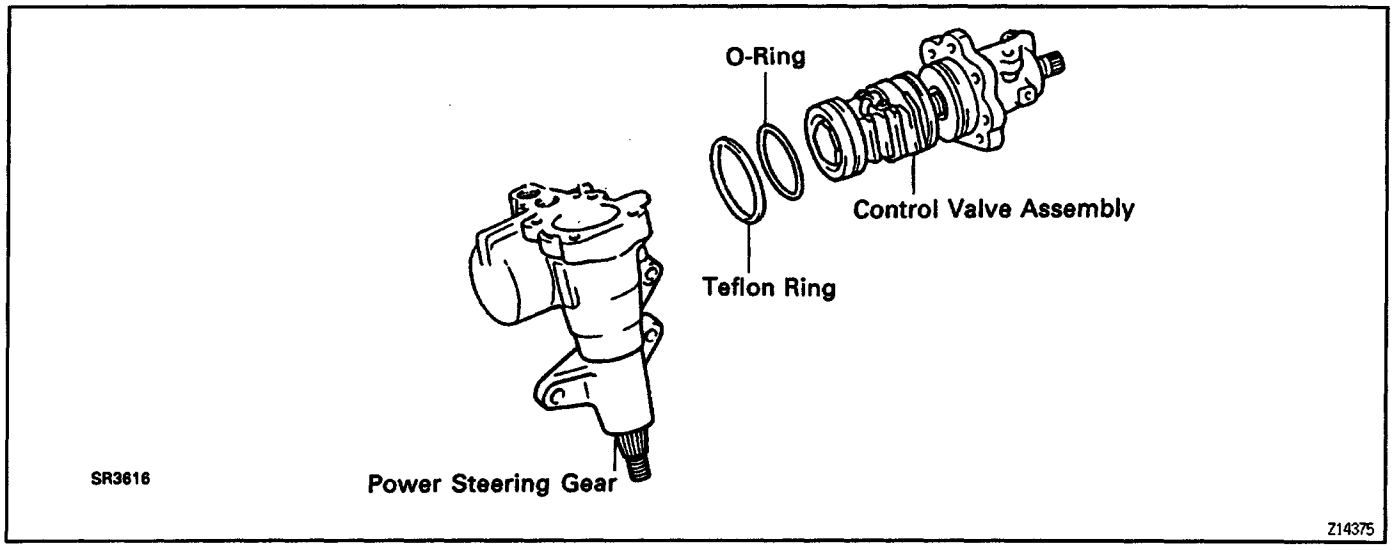

As with the rack and pinion type and recirculating ball type steering, preload is very important. If the preload is not correct, it could result in such trouble as steering wheel play or shimmy or lack of durability, so always make sure that it is correct.

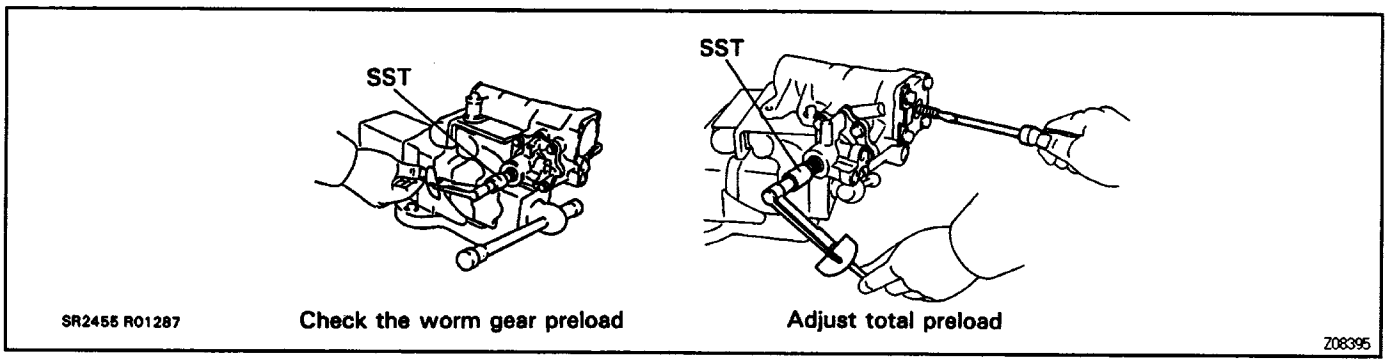

IDLE–UP DEVICE

The pump produces the maximum fluid pressure when the steering wheel is turned fully to the right or left and, at this time, there is a maximum load on the pump which causes a decrease in engine idle rpm. To solve this problem, vehicles are equipped with an idle –up device which acts to raise the engine idle rpm whenever there is a heavy load on the pump.
On EFI engines, when the piston of the air control valve is pushed by fluid pressure, the air valve opens and the volume of air by–passing the throttle valve is increased to regulate engine rpm.

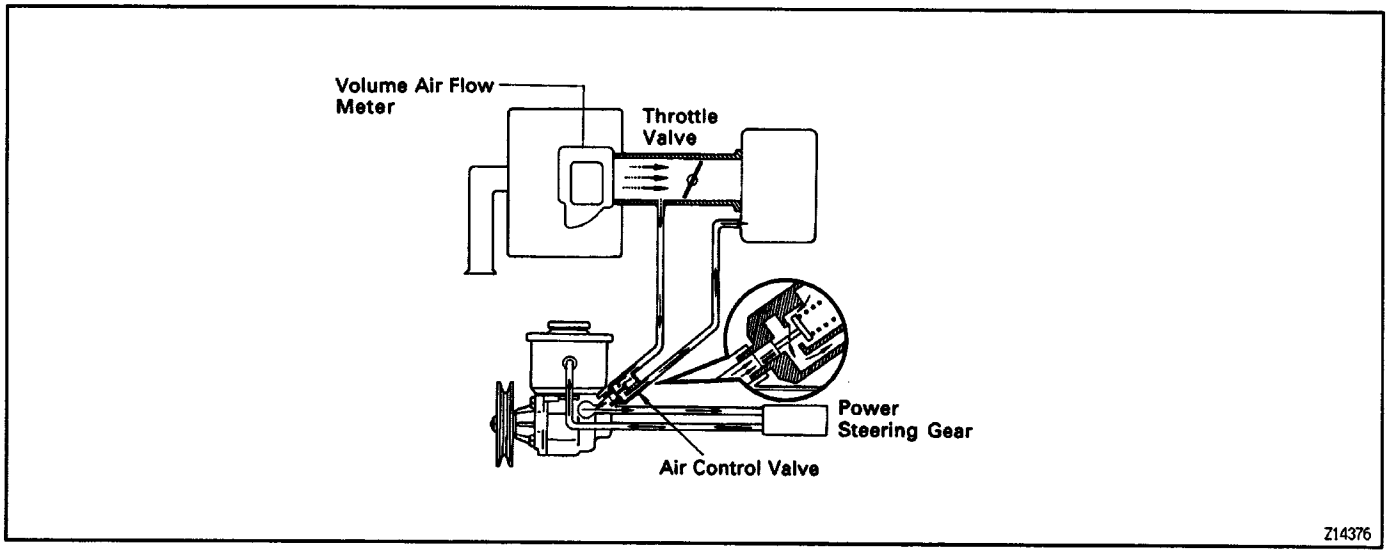

The idle–up devise functions to raise engine idle rpm when pump fluid pressure acts on the air control valve, installed to the pump body, to control the flow of air.

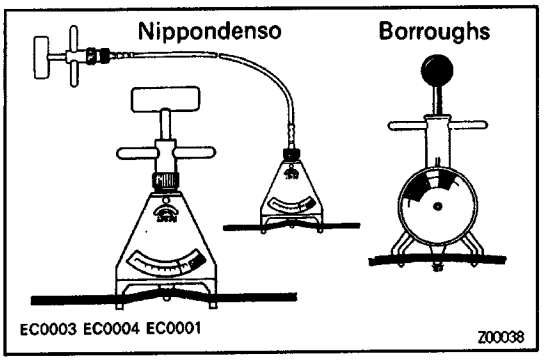

ON–VEHICLE INSPECTION

DRIVE BELT DEFLECTION CHECK

Using a belt tension gauge, check the drive belt deflection.

Belt tension gauge:

Nippondenso BTG–20 (95506–00020) or
Borroughs No.BT–33–73F

Drive belt deflection:

New belt

100–150 lbf

Used belt

60–100 lbf

HINT:

- ”New belt” refers to a belt which has been less than 5 minutes on a running engine.
- ”Used belt” refers to a belt which has been used on a running engine for 5 minutes or more.

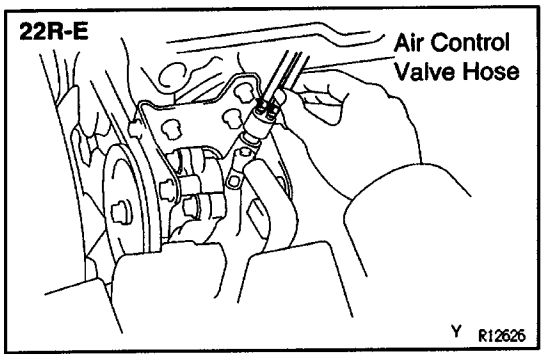

IDLE–UP CHECK

1. TURN AIR CONDITIONING SWITCH OFF

2. CHECK IDLE–UP

(a) Start engine and run it at idle.
(b) Fully turn the steering wheel.
(c) Check that the engine rpm decreases when the vacuum hose is pinched.
(d) Check that the engine rpm increases when the vacuum hose is released.

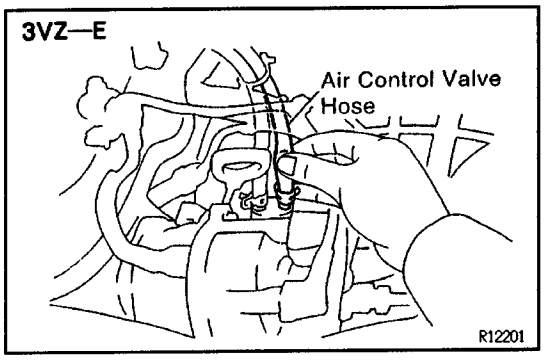

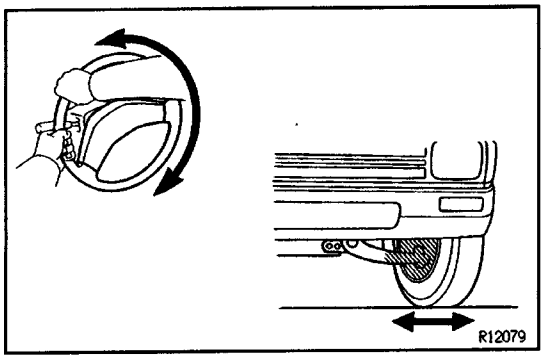

FLUID LEVEL CHECK

1. KEEP VEHICLE LEVEL

2. BOOST FLUID TEMPERATURE

(a) Start the engine and run it at idle.
(b) Turn the steering wheel from lock to lock several times to boost fluid temperature.

Fluid temperature:

80˚C (176˚F)

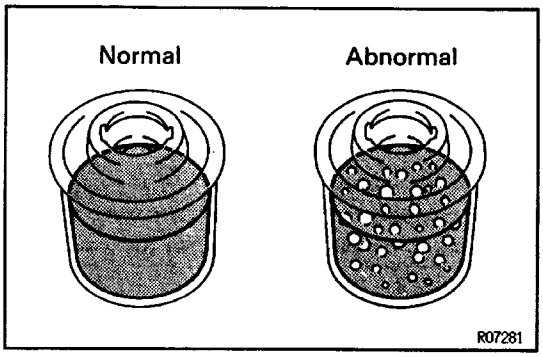

3. CHECK FOR FOAMING OR EMULSIFICATION

If there is foaming or emulsification, bleed power steering system.
(See page SR–31)

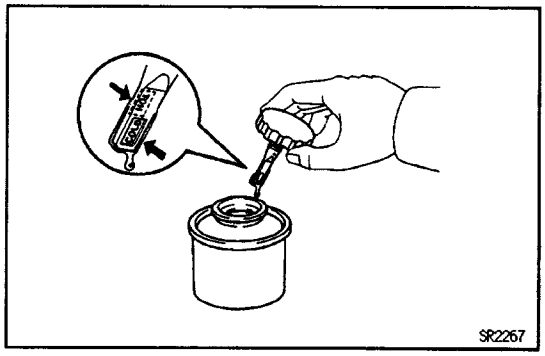

4. CHECK FLUID LEVEL

Check the fluid level in the oil reservoir.
If necessary, add fluid.
Fluid:

ATF DEXRON ® II

HINT: Check that the fluid level is within the HOT LEVEL range on the reservoir. If the fluid is cold, check that it is within the COLD LEVEL range

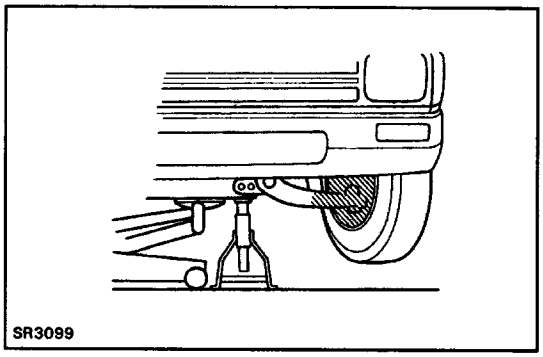

POWER STEERING FLUID REPLACEMENT

1. JACK UP FRONT OF VEHICLE AND SUPPORT IT WITH STANDS

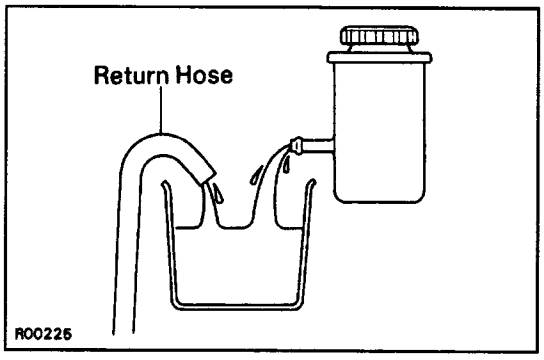

2. REMOVE RETURN HOSE FROM OIL RESERVOIR AND DRAIN FLUID INTO CONTAINER

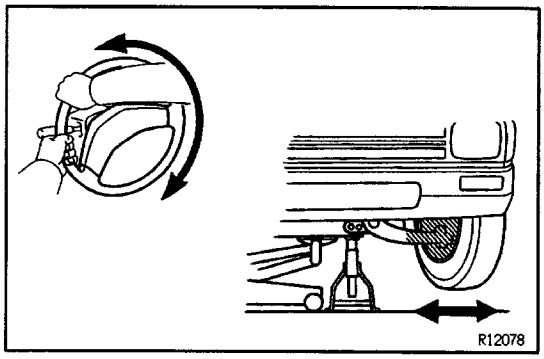

3. TURN STEERING WHEEL FROM LOCK TO LOCK WHILE DRAINING FLUID

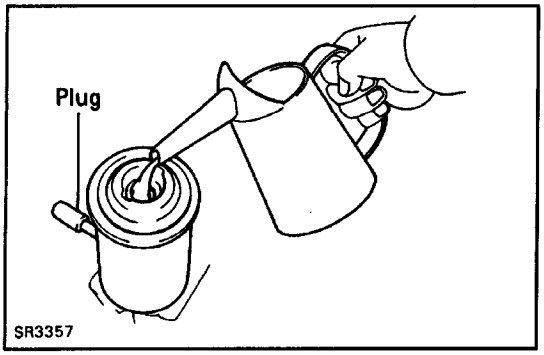

4. FILL OIL RESERVOIR

Fluid:

ATF DEXRON ® II

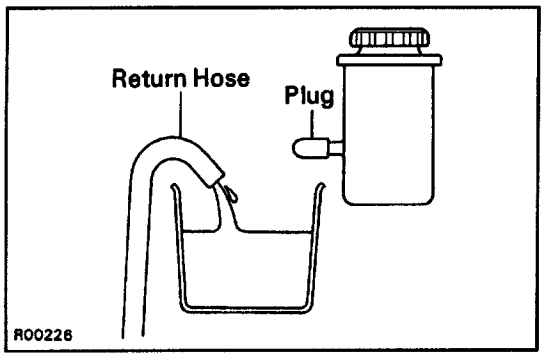

5. START ENGINE AND RUN IT AT 1,000 RPM

After 1 or 2 seconds, fluid will begin to discharge from the return hose. Stop the engine immediately at this time.

NOTICE: Take care that some fluid remains left in the oil reservoir.

6. REPEAT STEPS 4 AND 5 FOUR OR FIVE TIMES UNTIL THERE IS NO MORE AIR IN FLUID

7. CONNECT RETURN HOSE TO OIL RESERVOIR

8. BLEED POWER STEERING SYSTEM

POWER STEERING SYSTEM BLEEDING

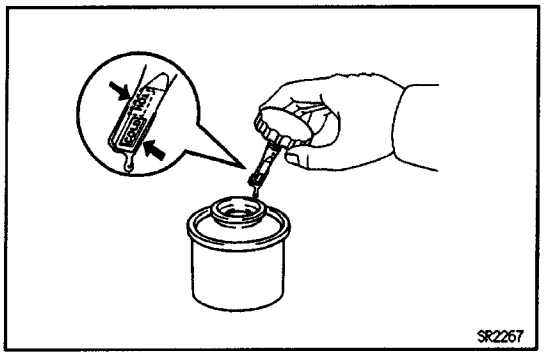

1. CHECK FLUID LEVEL

Check the fluid level in the oil reservoir.

If necessary, add fluid.

Fluid:

ATF DEXRON® II

HINT: Check that the fluid level is within the HOT LEVEL range on the reservoir. If the fluid is cold, check that it is within the COLD LEVEL range.

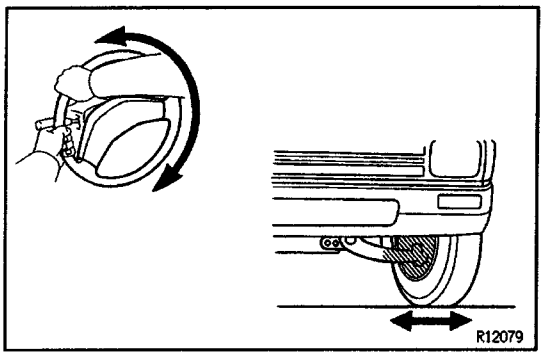

2. START ENGINE AND TURN STEERING WHEEL FROM LOCK TO LOCK 3 OR 4 TIMES

With the engine speed below 1,000 rpm, turn the steering wheel to left or right full lock and keep it there for 2–3 seconds, then turn the wheel to the opposite full lock and keep it there for 2–3 seconds.

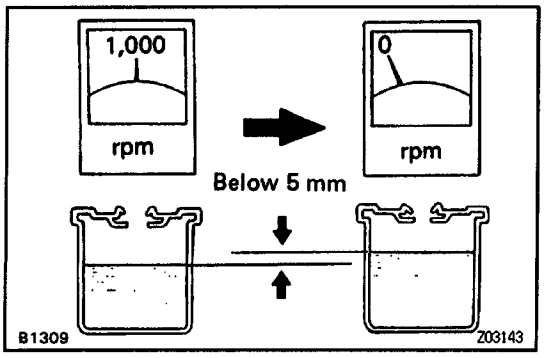

3. CHECK THAT FLUID IN OIL RESERVOIR IS NOT FOAMY OR CLOUDY AND DOES NOT RISE OVER MAXIMUM WHEN ENGINE IS STOPPED

Measure the fluid level with the engine running. Stop the engine and measure the fluid level.

Maximum rise: 5 mm (0.20 in.)

If a problem is found, repeat POWER STEERING FLUID REPLACEMENT on page SR–30.

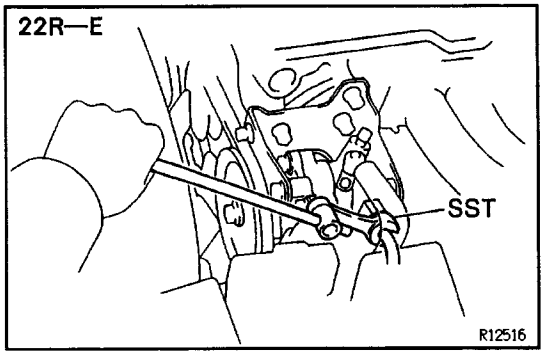

OIL PRESSURE CHECK

1. CONNECT OIL PRESSURE GAUGE

(a) Drain fluid.

(b) 22R–E/4WD:

Using SST, disconnect the pressure feed tube from the PS vane pump.

SST 09631–22020

22R–E/2WD, 3VZ–E:

Remove the union bolt and 2 gaskets and disconnect the pressure feed tube from the PS vane pump.

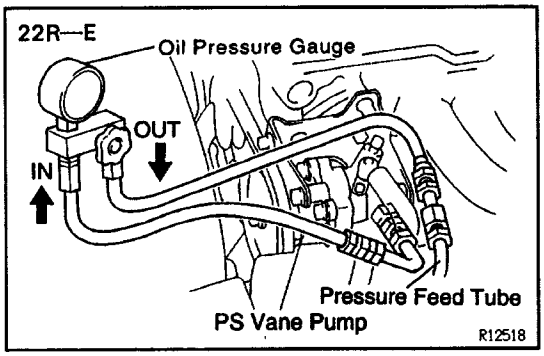

(c) Connect the valve side of the pressure gauge to the pressure feed tube, and the gauge side to the PS vane pump.

NOTICE: Check that the valve of the gauge is in the open position.

2. BLEED POWER STEERING SYSTEM

(See page SR–31)

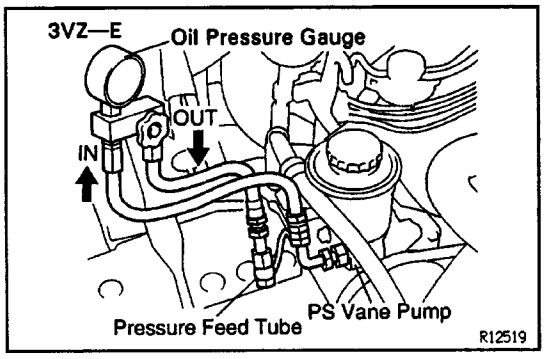

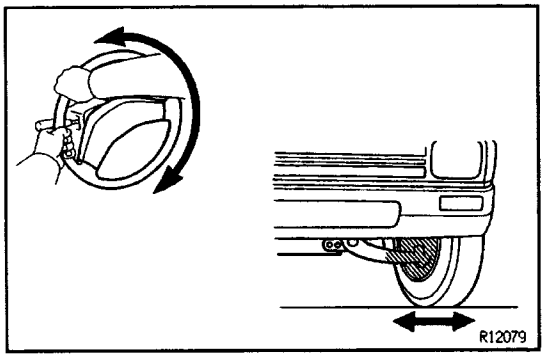

3. BOOST FLUID TEMPERATURE

(a) Start the engine and run it at idle.

(b) Turn the steering wheel from lock to lock several times to boost fluid temperature.

Fluid temperature:

80˚C (176˚ F)

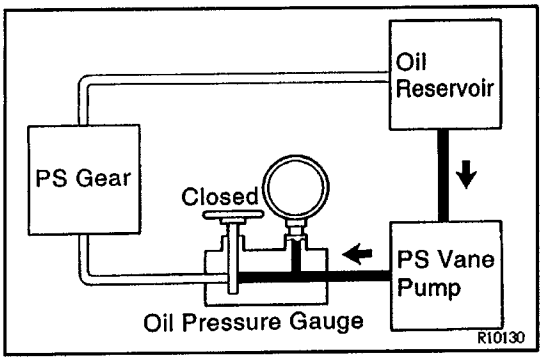

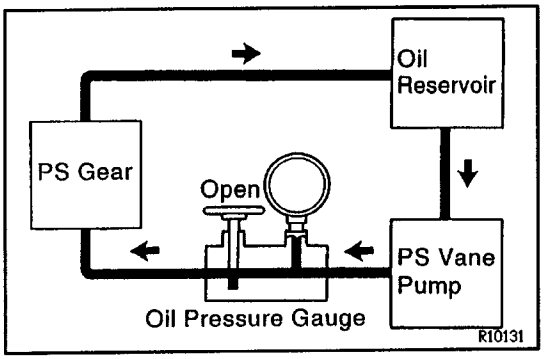

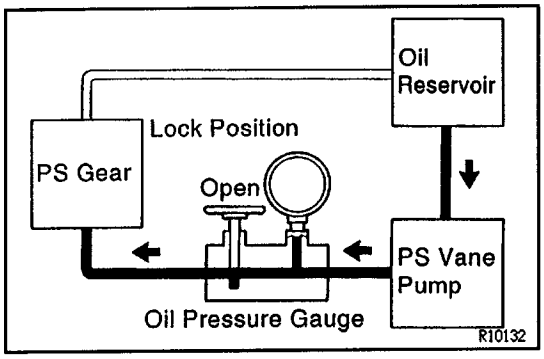

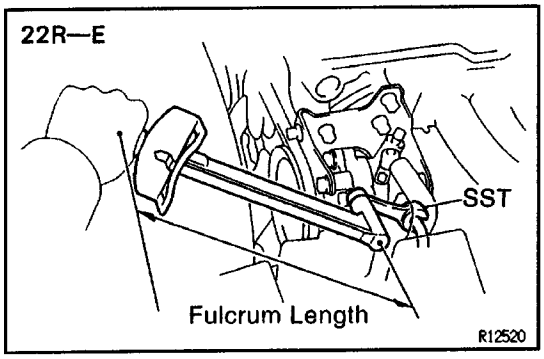

4. CHECK FLUID PRESSURE READING WITH VALVE CLOSED

With the engine idling, close the oil pressure gauge valve and observe the reading on the gauge.

Minimum pressure:

22R– E: 7,355 kPa (75 kgf/cm^2, 1,067 psi)

3VZ–E: 7,845 kPa (80 kgf/cm^2, 1,138 psi)

NOTICE:

- **Do not keep the valve closed for more than 10 seconds.**
- **Do not let the fluid temperature become too high.**

5. CHECK FLUID PRESSURE READING WITH VALVE OPENED

(a) With the engine idling, open the valve fully.

(b) Measure the fluid pressure at engine speeds of 1,000 rpm and 3,000 rpm.

Fluid pressure difference:

490 kPa (5 kgf/cm^2, 71 psi) or less

NOTICE: Do not operate the steering wheel.

6. CHECK PRESSURE READING WITH STEERING WHEEL TURNED TO FULL LOCK

With the engine idling and valve fully opened, turn the wheel to full lock.

Minimum pressure:

22R – E: 7,355 kPa (75 kgf/cm^2, 1,067 psi)

3VZ – E: 7,845 kPa (80 kgf/cm^2, 1,138 psi)

NOTICE:

- **Do not maintain lock position for more than 10 seconds.**
- **Do not let fluid temperature become too high.**

7. DISCONNECT OIL PRESSURE GAUGE

(a) Disconnect the gauge.

(b) 22R– E/4WD:

Using SST, connect the pressure feed tube.

SST 09631– 22020

Torque: 36 N–m (365 kgf–cm, 26 ft–lbf)

HINT: Use a torque wrench with a fulcrum length of 300 mm (11.81 in.).

22R–E/2WD, 3VZ–E:

Torque the union bolt with a new gasket on each side of the pressure feed tube.

Torque: 47 N–m (475 kgf–cm, 34 ft–lbf)

8. BLEED POWER STEERING SYSTEM

(See page SR–31)

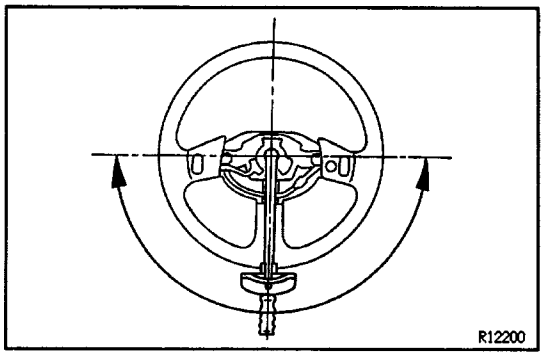

STEERING EFFORT MEASUREMENT

1. CENTER STEERING WHEEL

2. MEASURE STEERING EFFORT

(a) Remove steering wheel pad.
(See page SR–6)

(b) Start the engine and run it at idle.

(c) Measure the steering effort in both directions.

Reference:

5.9 N–m (60 kgf–cm, 52in.–lbf)

HINT: Be sure to consider the tire type, pressure and contact surface before making your diagnosis.

(d) Torque the steering wheel set nut.

Torque: 36 N–m (360 kgf–cm, 50 ft–lbf)

(e) Install the steering wheel pad.
(See page SR–6)

POWER STEERING VANE PUMP (3VZ–E)

POWER STEERING VANE PUMP REMOVAL AND INSTALLATION

Remove and install the parts, as shown.

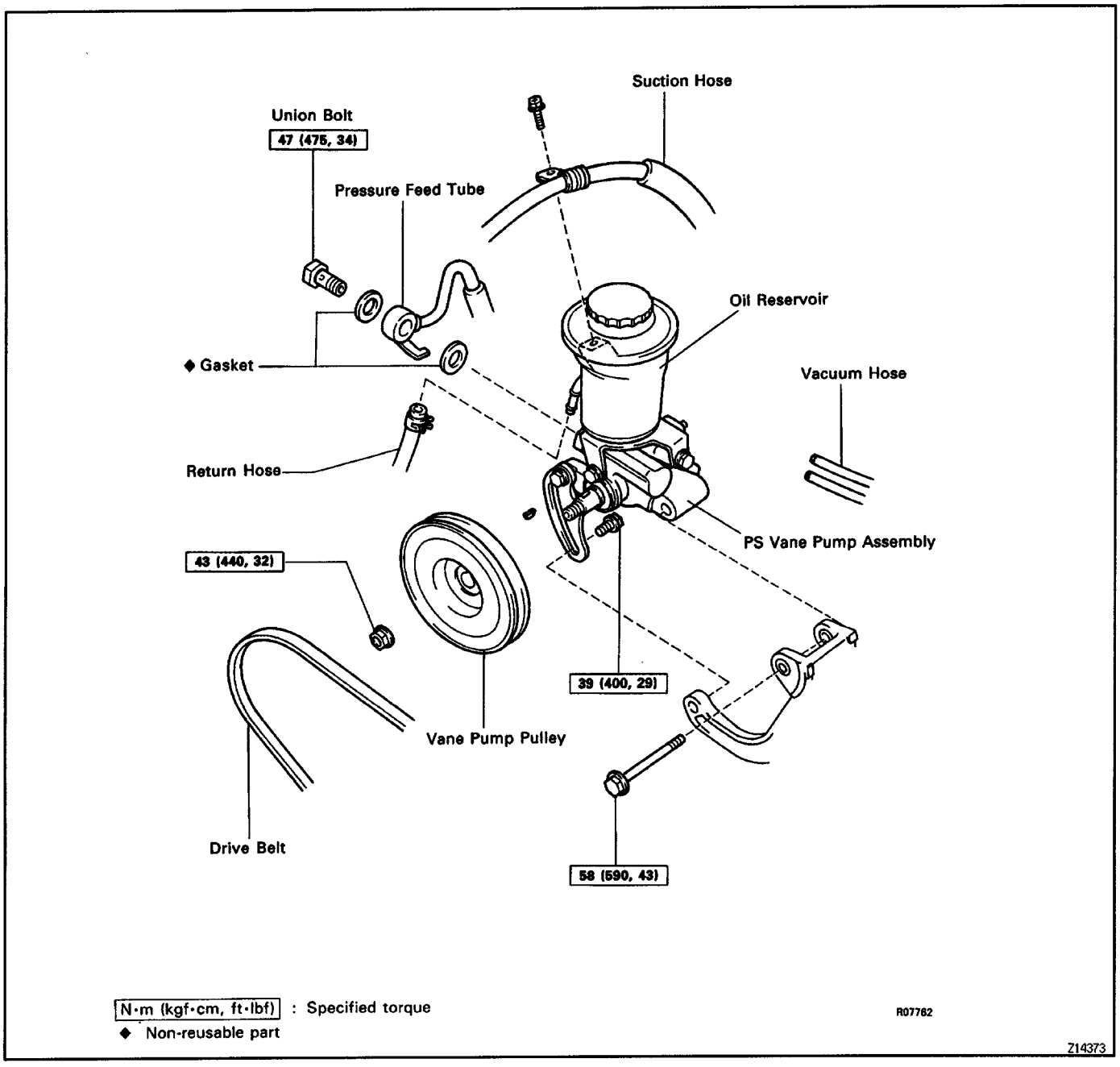

MAIN POINTS OF REMOVAL AND INSTALLATION

1. DISCONNECT AND CONNECT PRESSURE FEED TUBE

(a) Disconnect and connect the return hose from the oil reservoir.

(b) Torque the union bolt with a new gasket on each side of the pressure feed tube.

Torque: 47 N–m (475 kgf–cm, 34 ft–lbf)

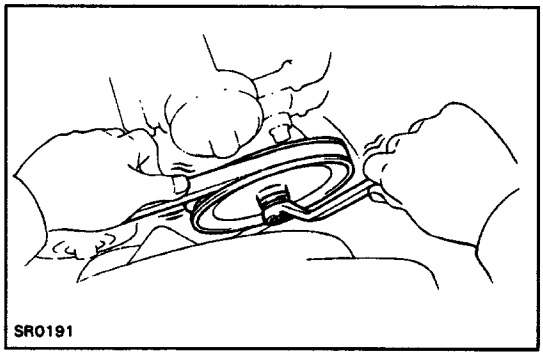

2. REMOVE AND INSTALL VANE PUMP PULLEY

Push on the drive belt with your hand to hold the pulley in place and loosen/torque the pulley nut.

Torque: 44 N–m (440 kgf–cm, 32 ft–lbf)

3. ADJUST DRIVE BELT TENSION AFTER INSTALLING PS VANE PUMP ASSEMBLY

(See page SR–29)

4. BLEED POWER STEERING SYSTEM

(See page SR–31)

COMPONENTS

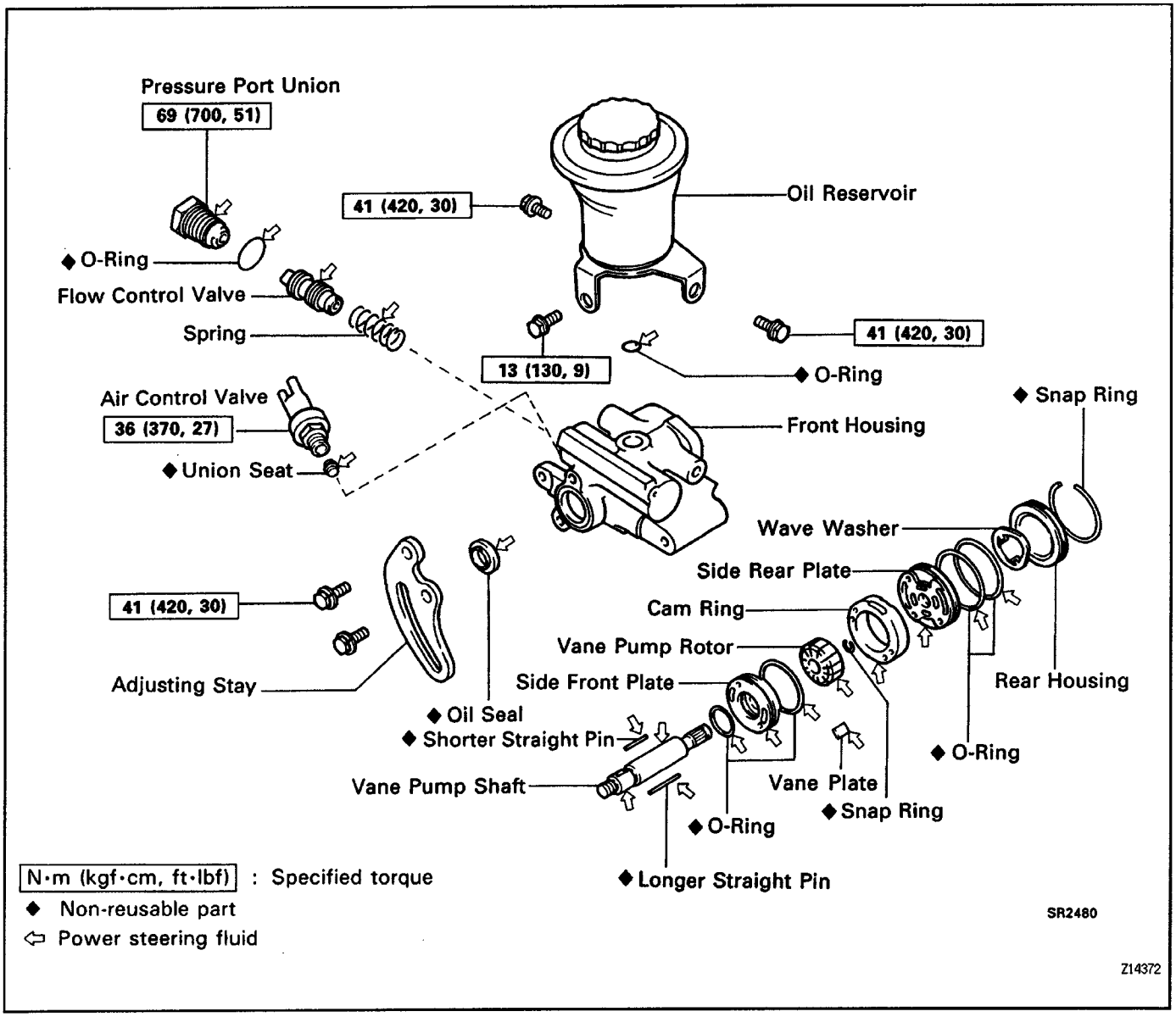

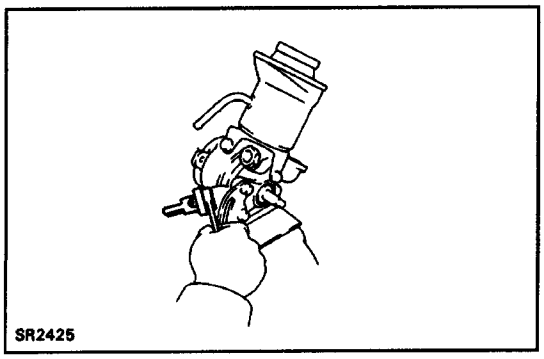

POWER STEERING VANE PUMP DISASSEMBLY

NOTICE: When using a vise, do not overtighten it.

1. REMOVE AIR CONTROL VALVE

(a) Remove the air control valve.

(b) Remove the union seat.

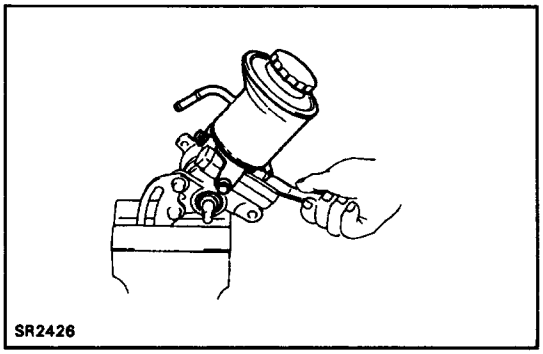

2. REMOVE OIL RESERVOIR

(a) Remove 3 bolts and the oil reservoir.

(b) Remove the O–ring from the oil reservoir.

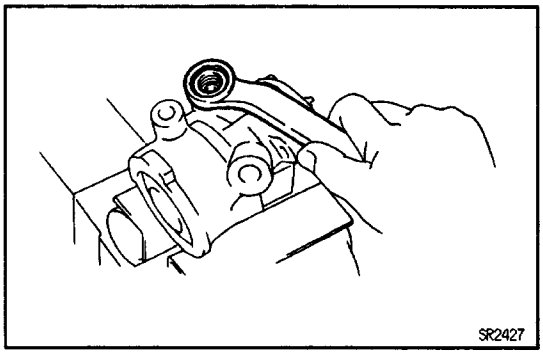

3. REMOVE PRESSURE PORT UNION, FLOW CONTROL VALVE AND SPRING

(a) Remove the pressure port union.

(b) Remove the O–ring from the pressure port union.

(c) Remove the flow control valve and spring.

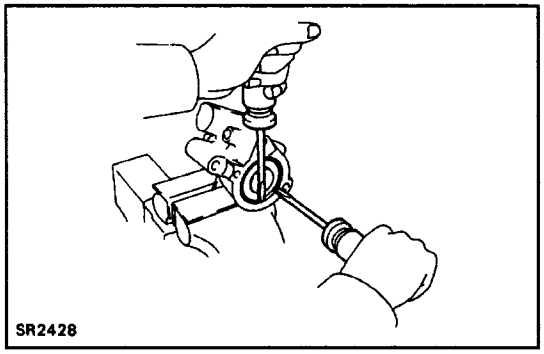

4. REMOVE REAR HOUSING

(a) Using 2 screwdrivers, remove the snap ring.

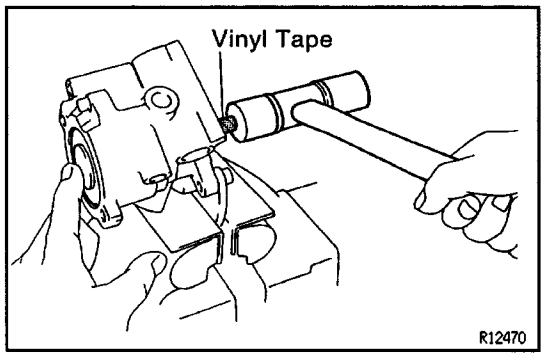

(b) Using a plastic hammer, tap out the rear housing and wave washer.

NOTICE: Tape the pump shaft tip before tapping.

(c) Remove the O–ring from the rear housing.

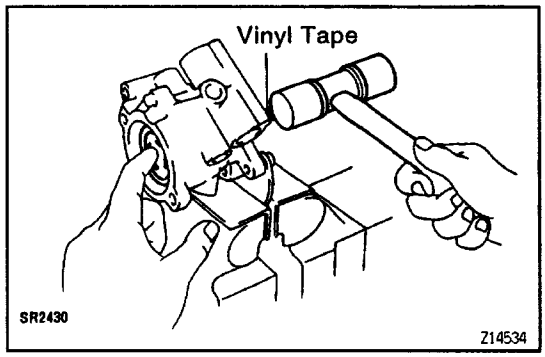

5. REMOVE SIDE REAR PLATE

(a) Using a plastic hammer, tap the shaft end and remove the rear plate.

NOTICE: Tape the pump shaft tip before tapping.

(b) Remove the O–ring from the rear plate.

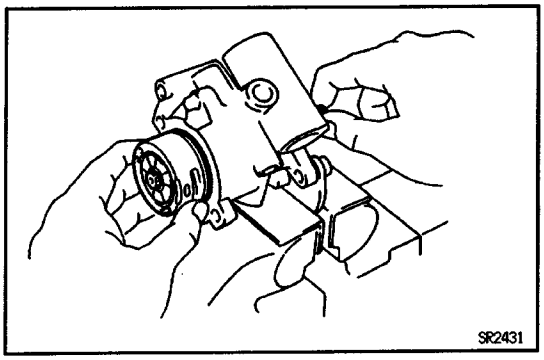

6. REMOVE VANE PUMP SHAFT WITH CAM RING, VANE PLATES, VANE PUMP ROTOR AND SIDE FRONT PLATE

Remove the shaft with the ring, vane plates, rotor and front plate from the front housing.

7. REMOVE CAM RING AND VANE PLATES

(a) Remove the ring from the vane pump shaft.

(b) Remove the 10 plates from the shaft.

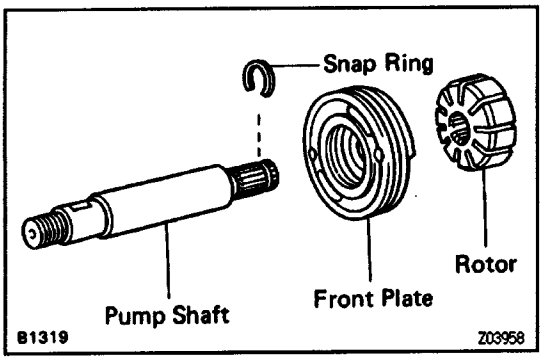

8. REMOVE VANE PUMP ROTOR AND SIDE FRONT PLATE

(a) Using a screwdriver, remove the snap ring.

(b) Remove the rotor and side front plate from the vane pump shaft.

(c) Remove the 2 O–rings from the side front plate.

(d) Remove the shorter straight pin from the side front plate.

9. REMOVE LONGER STRAIGHT PIN

Remove the pin from the front housing.

10. REMOVE ADJUSTING STAY

Remove the 2 bolts and adjusting stay.

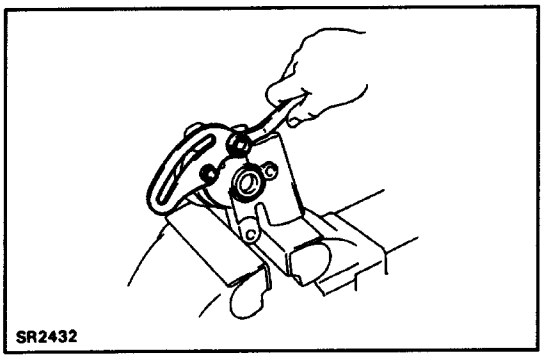

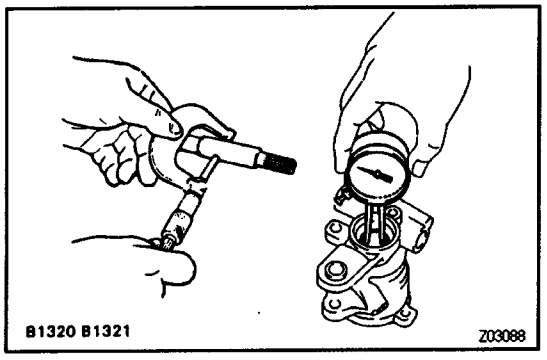

POWER STEERING VANE PUMP INSPECTION AND REPLACEMENT

NOTICE: When using a vise, do not overtighten it.

1. MEASURE OIL CLEARANCE BETWEEN VANE PUMP SHAFT AND BUSHING

Using a micrometer and caliper gauge, measure the oil clearance.

Standard clearance:

0.01 – 0.03 mm (0.0004 – 0.0012 in.)

Maximum clearance:

0.07 mm (0.0028 in.)

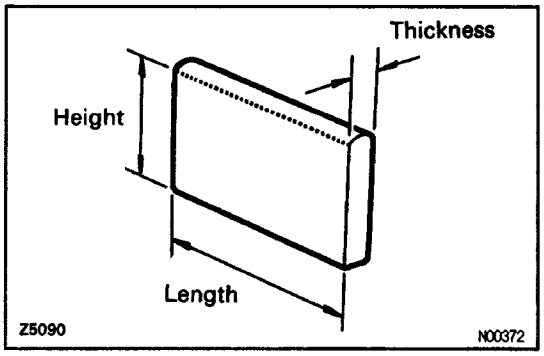

2. INSPECT VANE PUMP ROTOR AND VANE PLATES

(a) Using a micrometer, measure the height, thickness and length of the vane plate.

Minimum height:

8.1 mm (0.319 in.)

Minimum thickness:

1.797 mm (0.0707 in.)

Minimum length:

14.988 mm (0.5901 in.)

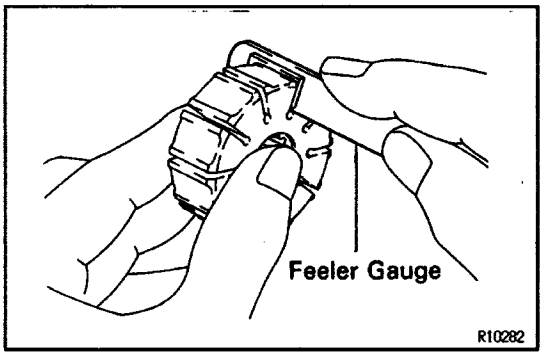

(b) Using a feeler gauge, measure the clearance between the rotor groove and vane plate.

Maximum clearance:

0.03 mm (0.0012 in.)

If more than maximum, replace the vane plate and/or rotor with one having the same mark stamped on the cam ring.

Inscribed mark:

1, 2, 3, 4 or None

HINT: There are 5 vane lengths with the following rotor and cam ring marks:

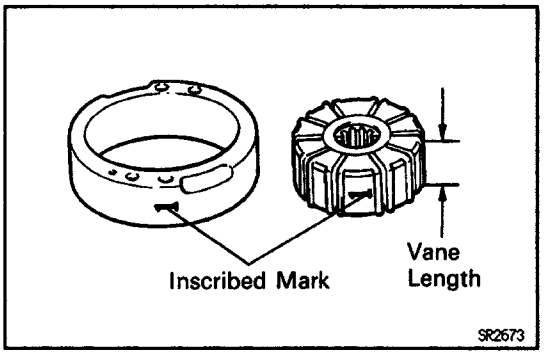

Rotor and cam ring mark	Vane length mm (in.)
None	14.996 – 14.998 (0.59039 – 0.59047)
1	14.994 – 14.996 (0.59031 – 0.59039)
2	14.992 – 14.994 (0.59024 – 0.59031)
3	14.990 – 14.992 (0.59016 – 0.59024)
4	14.988 – 14.990 (0.59008 – 0.59016)

3. INSPECT FLOW CONTROL VALVE

(a) Coat the valve with power steering fluid and check that it falls smoothly into the valve hole by its own weight.

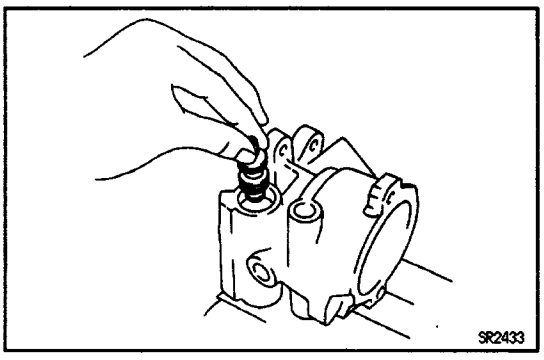

(b) Check the flow control valve for leakage.

Close one of the holes and apply 392–490 kPa (4–5 kgf/cm^2, 57–71 psi) of compressed air into the opposite side, and confirm that air does not come out from the end hole.

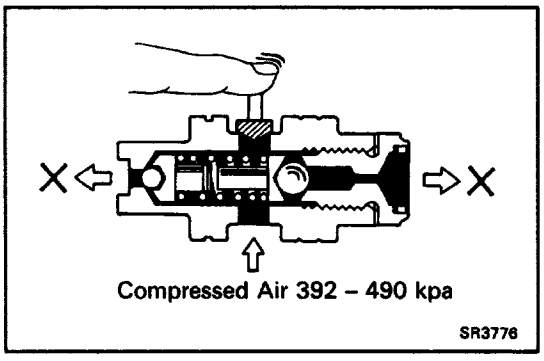

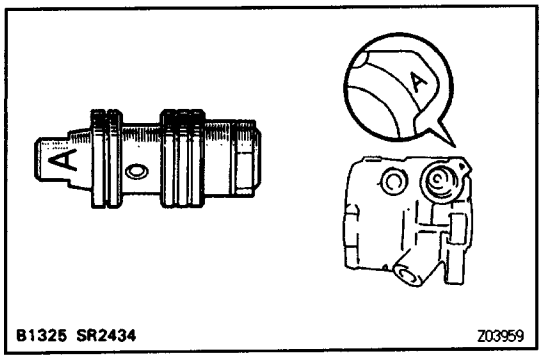

If necessary, replace the valve with one having the same letter as inscribed on the front housing.

Inscribed mark

A, B, C, D, E or F

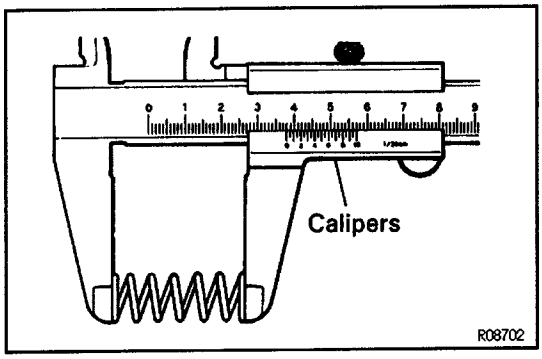

4. INSPECT SPRING

Using calipers, measure the free length of the spring.

Spring length:

35 – 37 mm (1.38 – 1.46 in.)

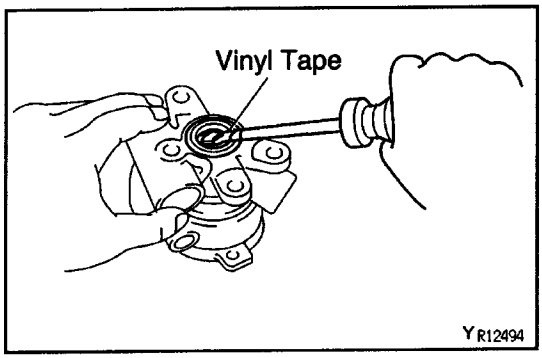

5. IF NECESSARY. REPLACE OIL SEAL

(a) Using a screwdriver, pry out the oil seal.

NOTICE: Tape the screwdriver tip before use. Be careful not to damage the front housing.

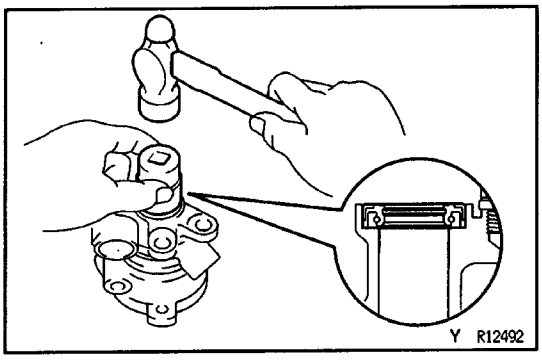

(b) Coat a new oil seal lip with power steering fluid.

(c) Using a socket wrench and hammer, tap in the oil seal.

NOTICE: Make sure you install the oil seal facing the correct direction.

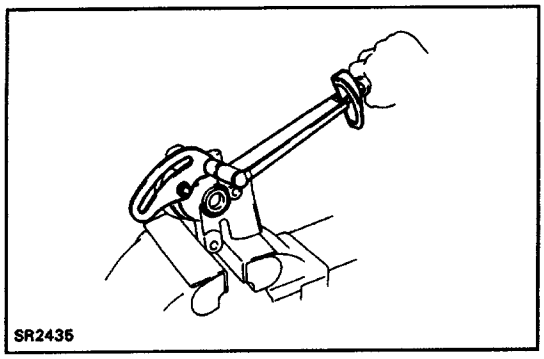

POWER STEERING VANE PUMP ASSEMBLY

NOTICE: When using a vise, do not overtighten it.

1. COAT WITH POWER STEERING FLUID

(See page SR–47)

2. INSTALL ADJUSTING STAY

Install the adjusting stay and torque the 2 bolts.

Torque: 41 N–m (420 kgf–cm, 30 ft–lbf)

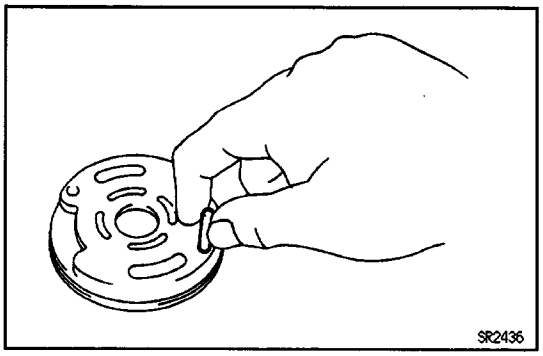

3. INSTALL SIDE FRONT PLATE AND VANE PUMP ROTOR

(a) Install a new shorter straight pin to the front plate.

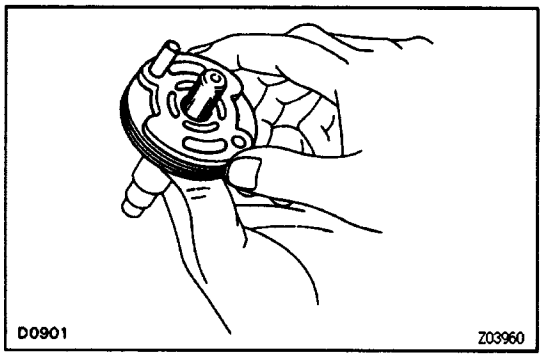

(b) Coat 2 new 0– rings with power steering fluid.
(c) Install the 2 O–rings to the front plate.
(d) Install the front plate to the vane pump shaft.

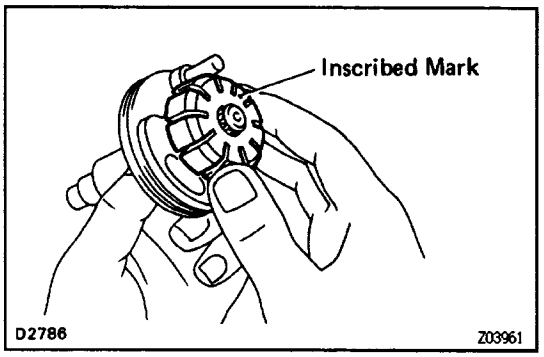

(e) Install the rotor to the vane pump shaft with the inscribed mark facing outward.
(f) Install the snap ring to the shaft.

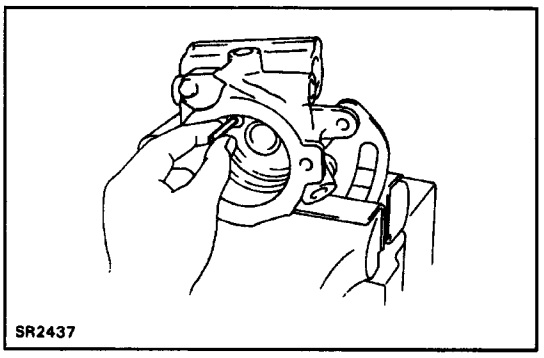

4. INSTALL VANE PUMP SHAFT WITH VANE PUMP ROTOR AND SIDE FRONT PLATE

(a) Install a new longer straight pin to the front housing.

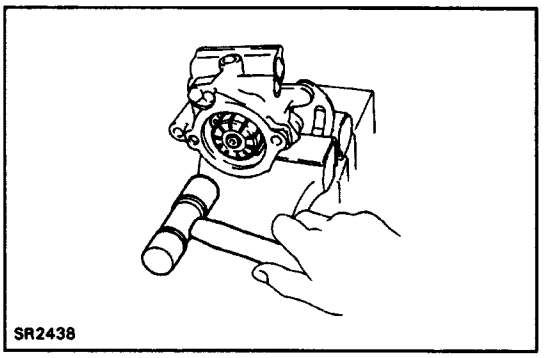

(b) Align the hole of the front plate and longer straight pin and tap in the pump shaft with a plastic hammer.

NOTICE: Be careful not to damage the oil seal and O–rings.

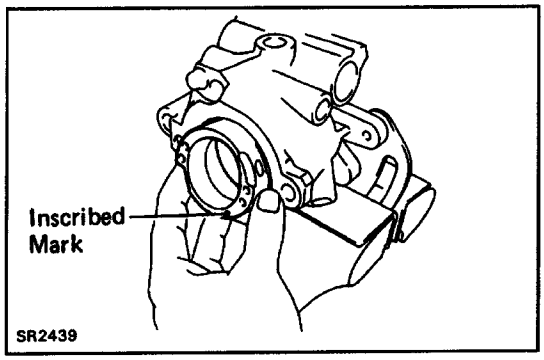

5. INSTALL CAM RING

Align the holes of the cam ring and 2 straight pins, and install the cam ring with the inscribed mark facing outward.

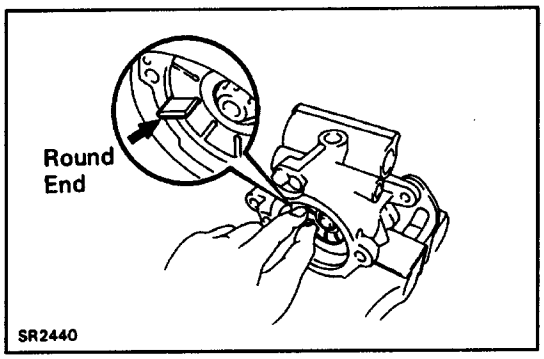

6. INSTALL VANE PLATES

Install the 10 plates with the round end facing outward.

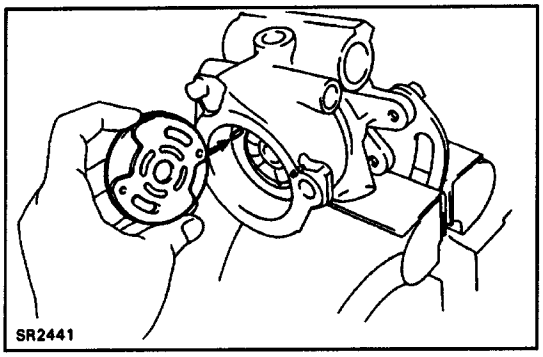

7. INSTALL SIDE REAR PLATE

(a) Coat a new O–ring with power steering fluid.
(b) Install the O–ring to the plate.
(c) Align the holes of the plate and 2 straight pins, and install the plate.

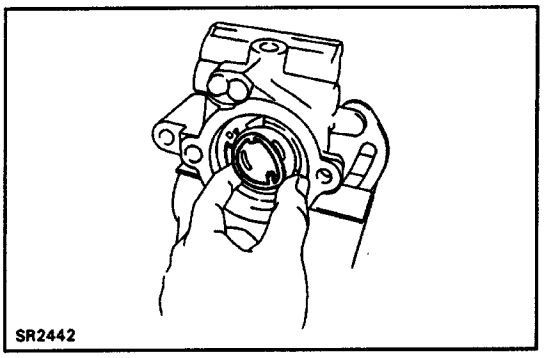

8. INSTALL WAVE WASHER

Install washer so that its protrusions fit into the slots in the plate.

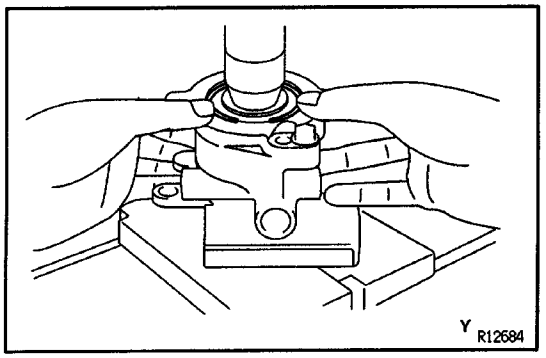

9. INSTALL REAR HOUSING

(a) Coat a new O–ring with power steering fluid and install it to the rear housing.
(b) Install the rear housing and use a press to push down on the wave washer hard enough to compress it.

NOTICE: Do not apply too much pressure.

(c) Install a new snap ring.

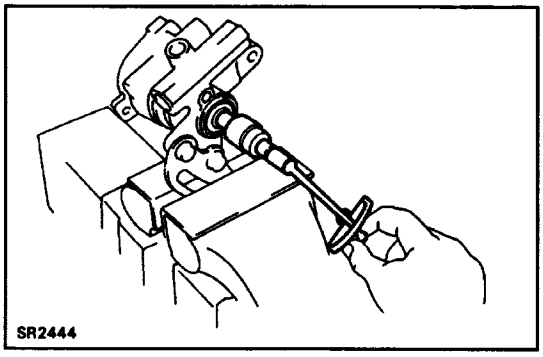

10. MEASURE PS VANE PUMP SHAFT ROTATING TORQUE

(a) Check that the shaft rotates smoothly without abnormal noise.

(b) Temporarily install the pulley nut and using a torque wrench check the pump rotating torque.

Rotating torque:

0.3 N–m (2.8 kgf–cm, 2.4 in–lbf) or less

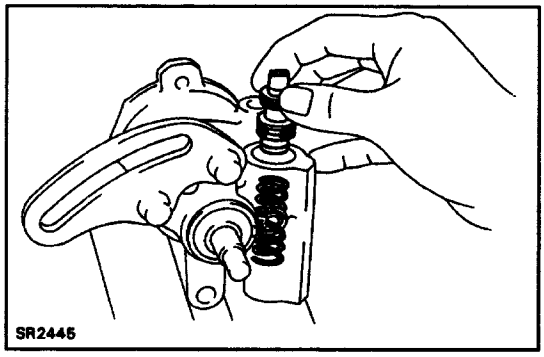

11. INSTALL SPRING, FLOW CONTROL VALVE AND PRESSURE PORT UNION

(a) Install the spring and the valve into the housing.

(b) Coat a new 0– ring with power steering fluid.

(c) Install the O–ring to the pressure port union.

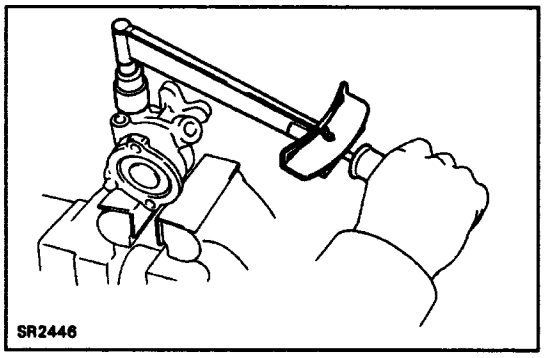

(d) Torque the union.

Torque: 69 N–m (700 kgf–cm, 51 ft–lbf)

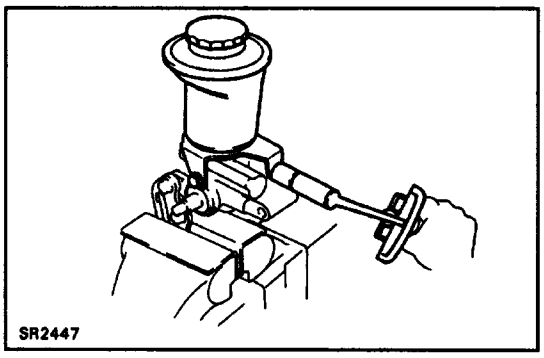

12. INSTALL OIL RESERVOIR

(a) Coat a new O–ring with power steering fluid.

(b) Install the O–ring to the oil reservoir.

(c) Install the oil reservoir with the 3 bolts.

Torque:

12 mm bolt 13 N–m (130 kgf–cm, 9 ft–lbf)

14 mm bolt 41 N–m (420 kgf–cm, 30 ft–lbf)

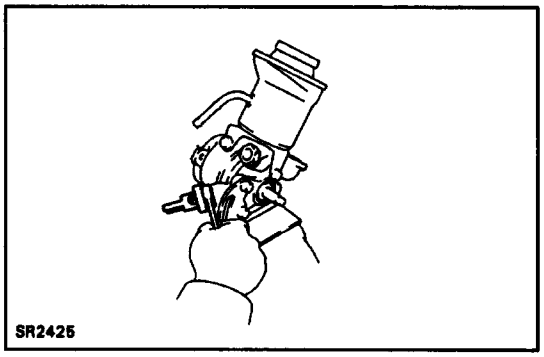

13. INSTALL AIR CONTROL VALVE

(a) Install a new union seat.

(b) Torque the valve.

Torque: 36 N–m (370 kgf–cm, 27 ft–lbf)

POWER STEERING GEAR

POWER STEERING GEAR REMOVAL AND INSTALLATION

Remove and install the parts, as shown.

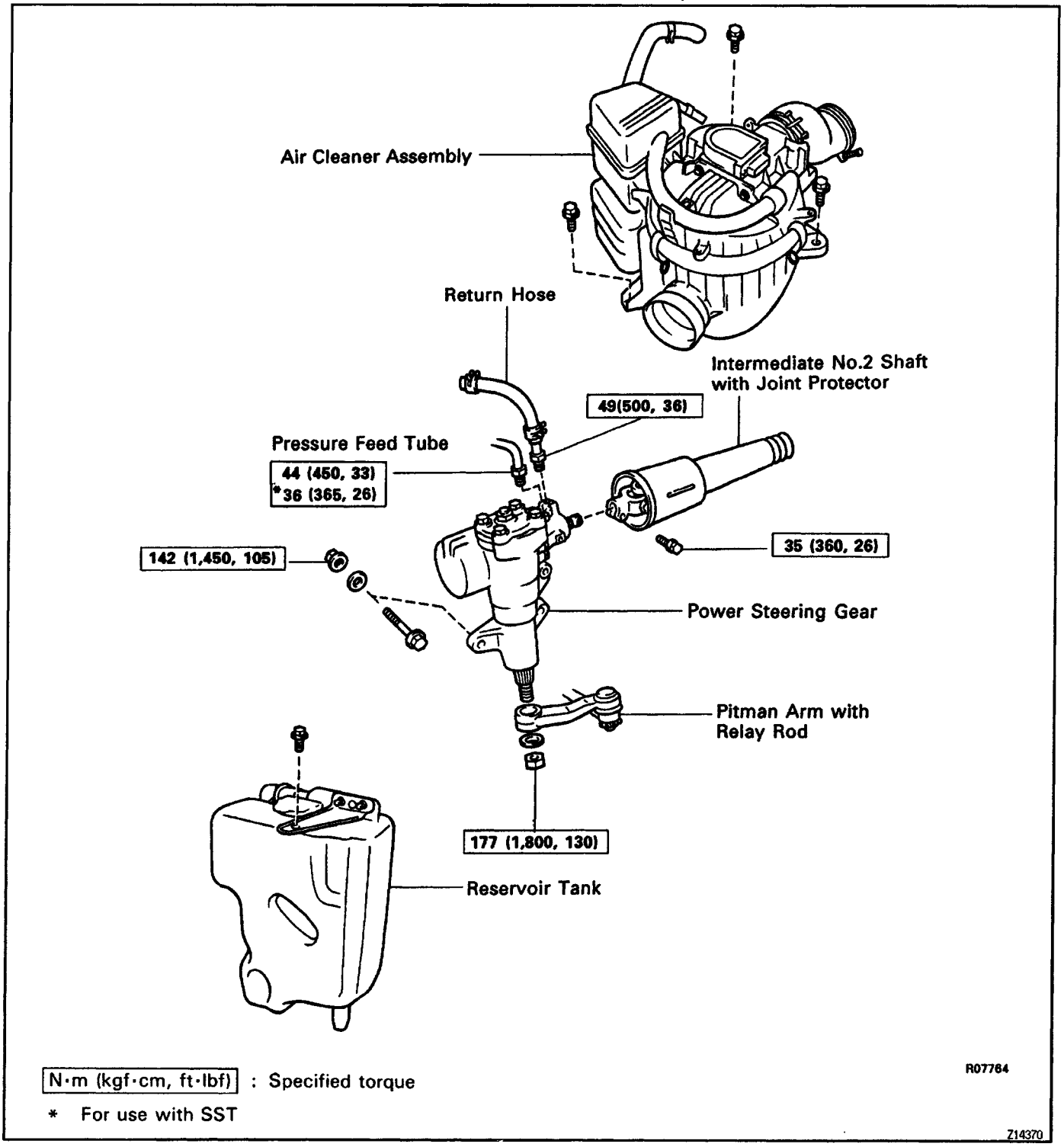

MAIN POINT OF REMOVAL AND INSTALLATION

1. REMOVE OIL RESERVOIR

2. REMOVE AIR CLEANER ASSEMBLY

3. DISCONNECT INTERMEDIATE NO.2 SHAFT

(See page SR–7)

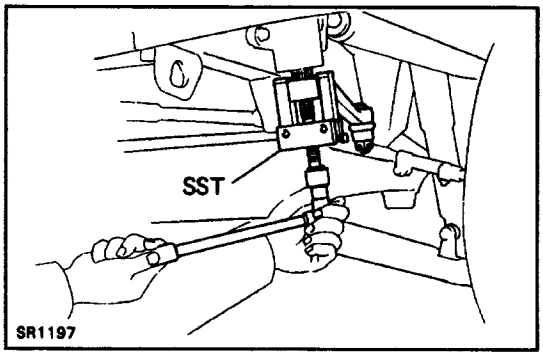

4. DISCONNECT AND CONNECT PITMAN ARM

(a) Using SST, disconnect the pitman arm from the cross shaft.
SST 09628–62011

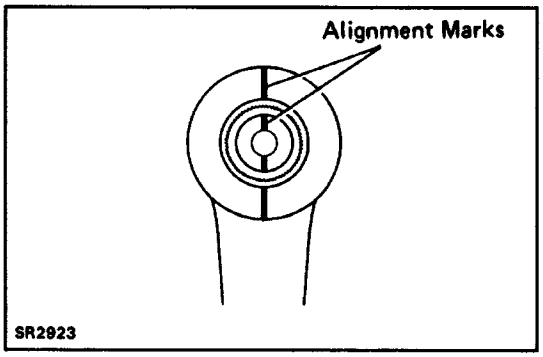

(b) Align the alignment marks on the cross shaft and pitman arm and connect the pitman arm.

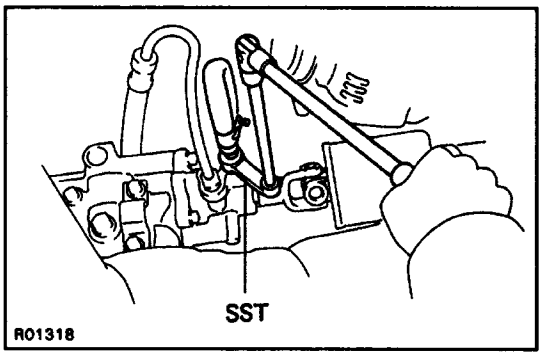

5. DISCONNECT PRESSURE FEED TUBE

Using SST, disconnect the pressure feed tube from the gear assembly.
SST 09631 – 22020

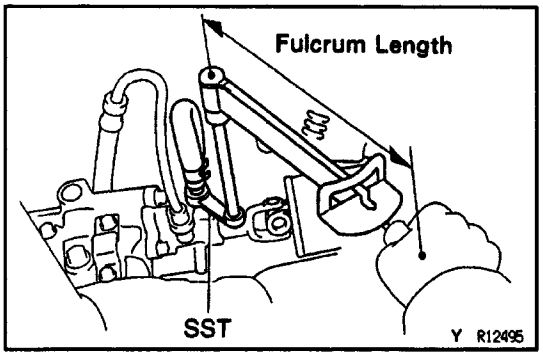

6. CONNECT PRESSURE FEED TUBE

Using SST, connect the pressure feed tube.
SST 09631– 22020
Torque: 36 N–m (365 kgf–cm, 26 ft–lbf)
HINT: Use a torque wrench with a fulcrum length of 300 mm (11.81 in.).

COMPONENTS

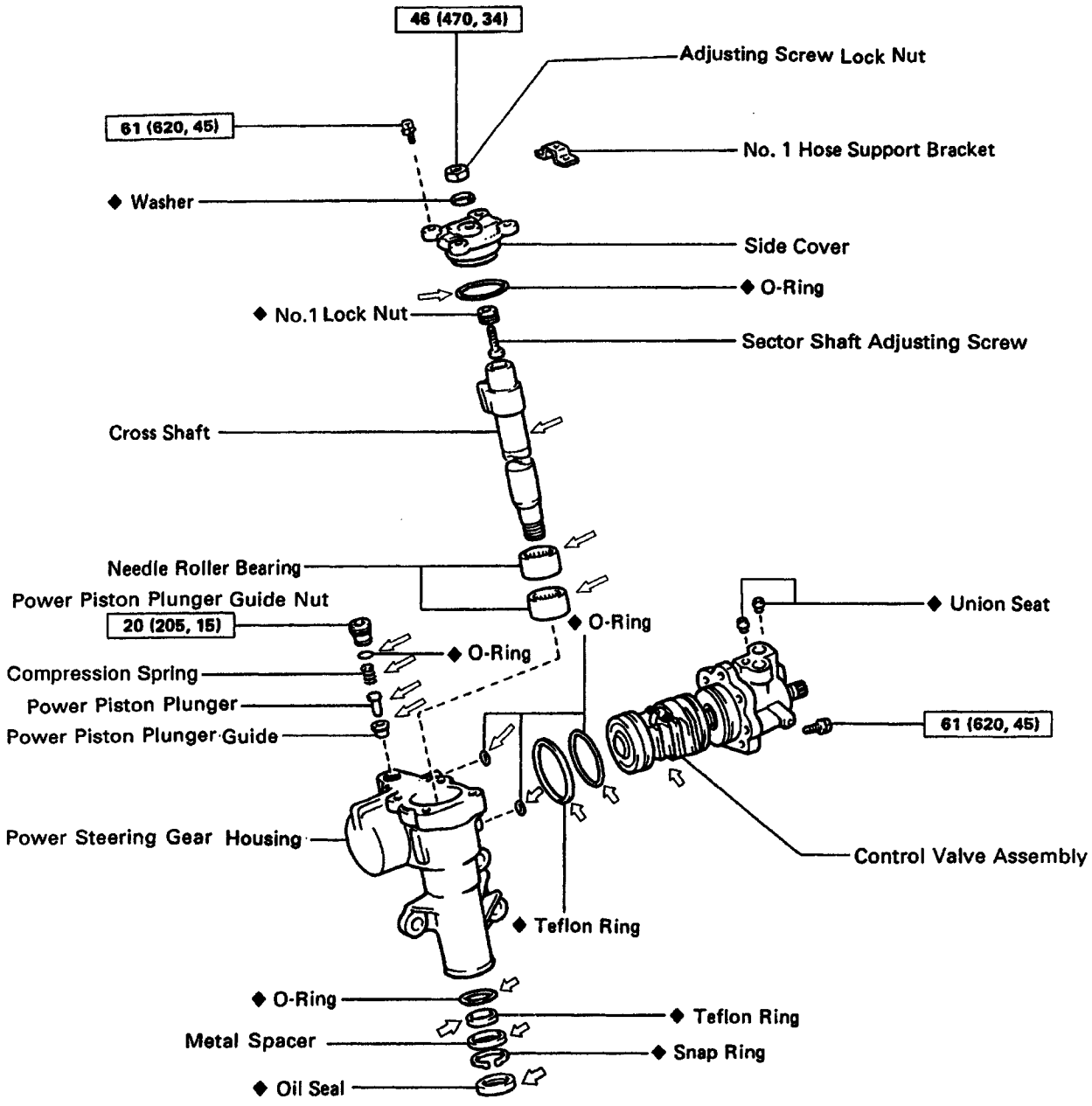

N·m (kgf·cm, ft·lbf) : Specified torque

◆ Non-reusable part

⇦ Power steering fluid

R01233

Z14450

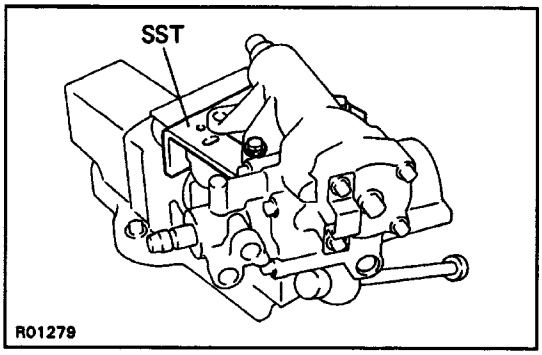

POWER STEERING GEAR DISASSEMBLY

NOTICE: When using a vise, do not overtighten it.

1. SECURE PS GEAR HOUSING IN VISE

Secure the gear housing on SST and clamp SST in a vise.
SST 09630–00013 (09631 –00141)

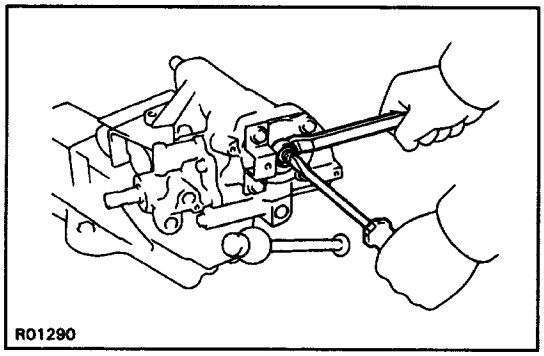

2. REMOVE SIDE COVER

(a) Place a screwdriver to the adjusting screw lock nut so that it does not rotate and remove the adjusting screw lock nut.

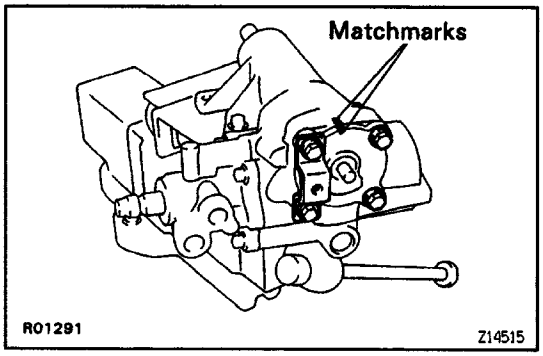

(b) Place matchmarks on the side cover and gear housing.
(c) Remove the 4 bolts and No.1 hose support bracket.

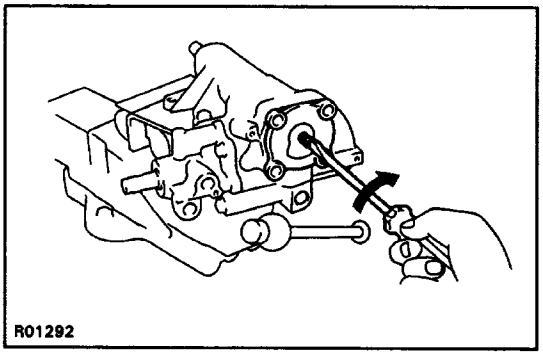

(d) Screw in the adjusting screw until the cover comes off.

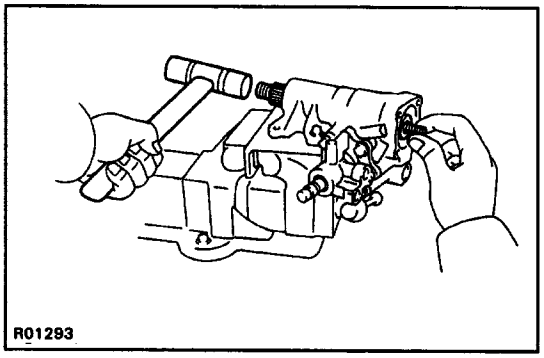

3. REMOVE CROSS SHAFT

Using a plastic hammer, tap on the cross shaft end and pull out the shaft.

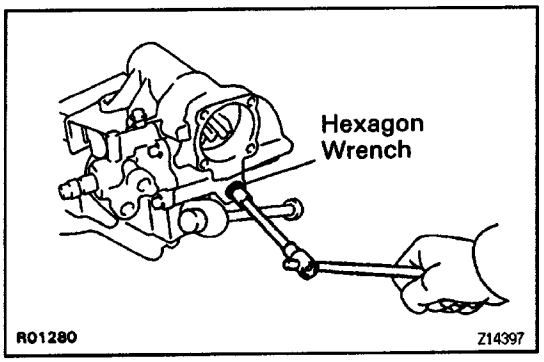

4. REMOVE POWER PISTON PLUNGER GUIDE NUT, COMPRESSION SPRING, POWER PISTON PLUNGER AND POWER PISTON PLUNGER GUIDE

(a) Using a hexagon wrench (11 0mm), remove the plunger guide nut.

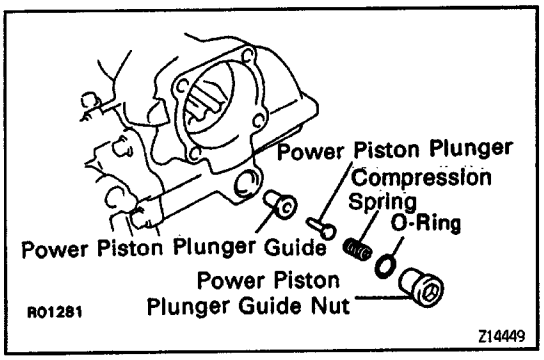

(b) Remove the spring, plunger and plunger guide.

(c) Remove the O–ring.

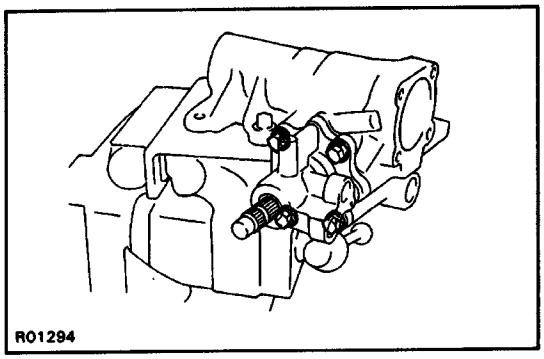

5. REMOVE CONTROL VALVE ASSEMBLY

(a) Remove the 4 bolts.

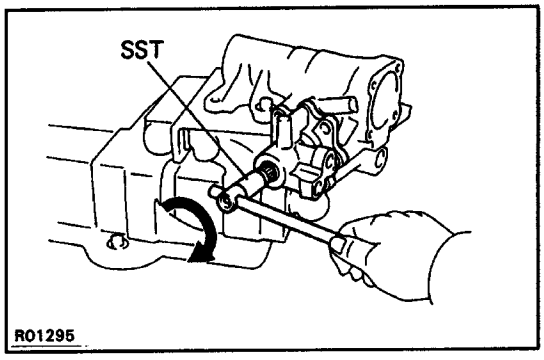

(b) Using SST, turn the control valve clockwise with holding the power piston nut by your finger so it cannot move.
SST 09616–00010

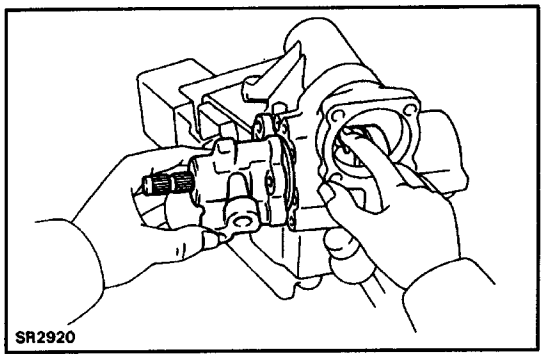

(c) Pull out the control valve assembly.

NOTICE: Ensure that the power piston nut does not come off the worm shaft.

(d) Remove the 2 0– rings.

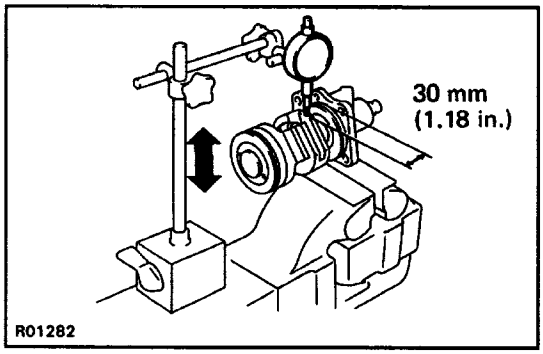

POWER STEERING GEAR INSPECTION AND REPLACEMENT

NOTICE: When using a vise, do not overtighten it.

1. INSPECT BALL CLEARANCE

Using a dial indicator, check the ball clearance. Move the worm gear up and down.

Maximum ball clearance:

0.15 mm (0.0059 in.)

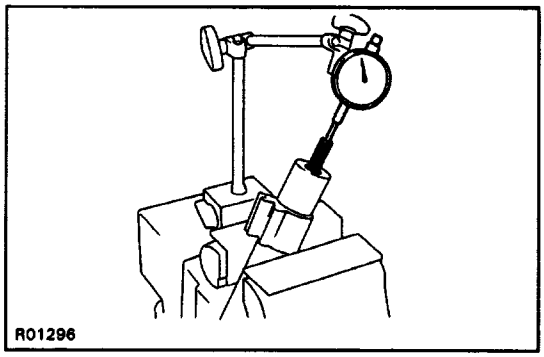

2. INSPECT CROSS SHAFT ADJUSTING SCREW THRUST CLEARANCE

Using a dial indicator, measure the thrust clearance.

Thrust clearance:

0.03 – 0.05 mm (0.0012 – 0.0020 in.)

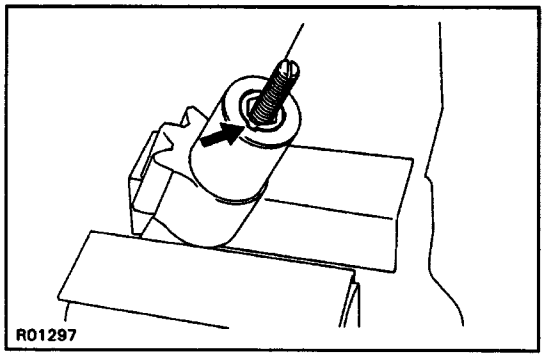

3. IF NECESSARY, ADJUST THRUST CLEARANCE

(a) Using a chisel and hammer, unstake the lock nut.

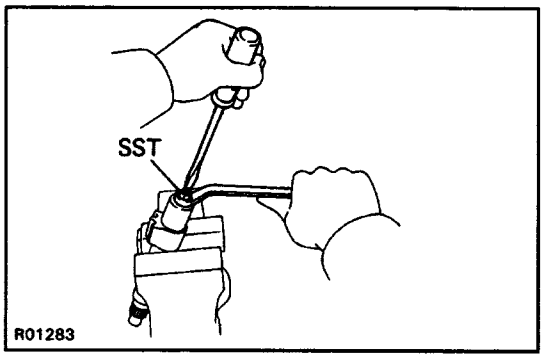

(b) Using SST, remove the lock nut.
SST 09630–00013 (09631–00050)

(c) Using a screwdriver, adjust the adjusting screw for correct thrust clearance.

(d) Tighten a new lock nut.

(e) Stake the lock nut.

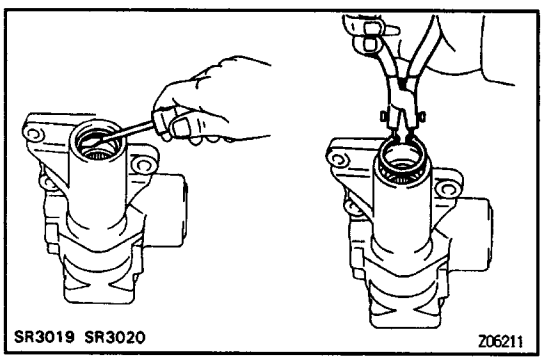

4. IF NECESSARY. REPLACE NEEDLE ROLLER BEAR–INGS

(a) Using a screwdriver, pry out the oil seal.

(b) Using snap ring pliers, remove the snap ring.

(c) Remove the metal spacer, teflon ring and O–ring.

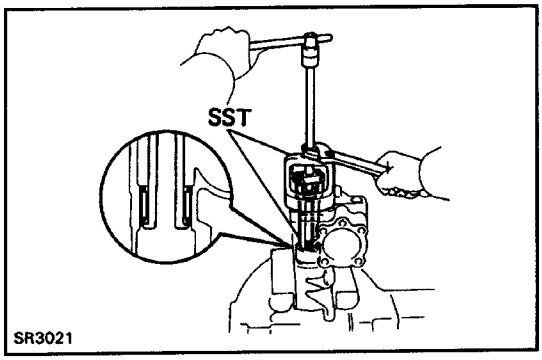

(d) Using SST, remove the bearing.
SST 09612–65014 (09612–01030)

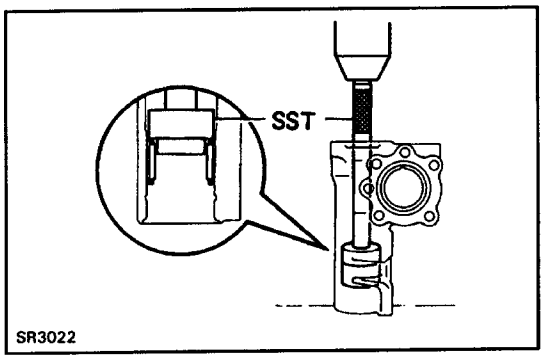

(e) Using SST, press out the bearing.
SST 09630–00012 (09631–00020, 09631–00090)

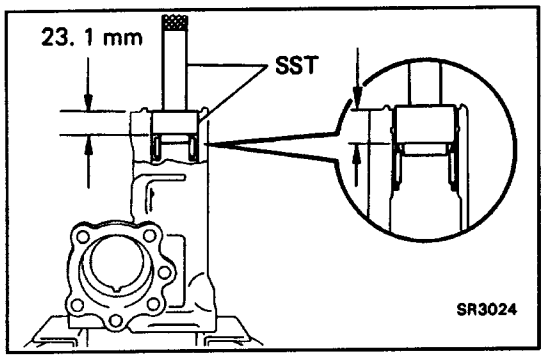

(f) Coat a new bearing with power steering fluid.
(g) Using SST, press in the bearing.
SST 09630–00013 (09631 –00020, 09631 –00090)
HINT: Install the lower bearing so that it is positioned 23.1 mm (0.909 in.) away from the housing inner end surface.

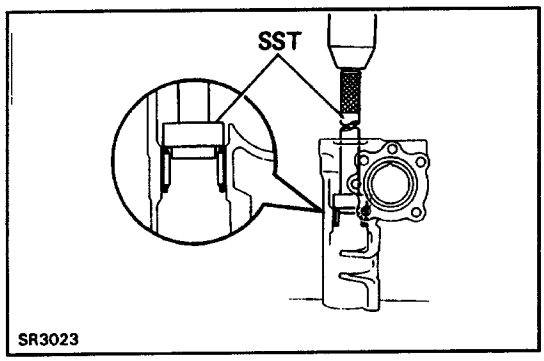

(h) Coat a new bearing with power steering fluid.
(i) Using SST, press in the bearing.
SST 09630–00013 (09631 –00020, 09631 –00090)
HINT: The bearing's top end should be installed so that it aligns with the housing end surface.
(j) Coat a new O–ring and metal spacer with power steering fluid.
(k) Install the O–ring and metal spacer.

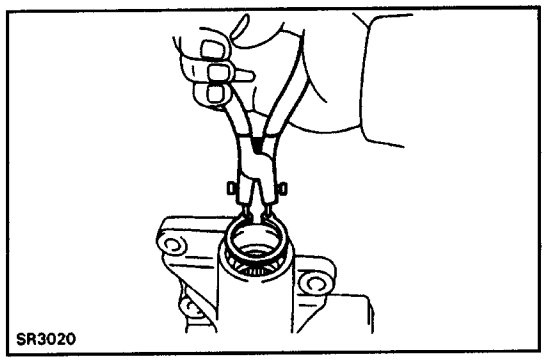

(l) Using snap ring pliers, install a new snap ring.

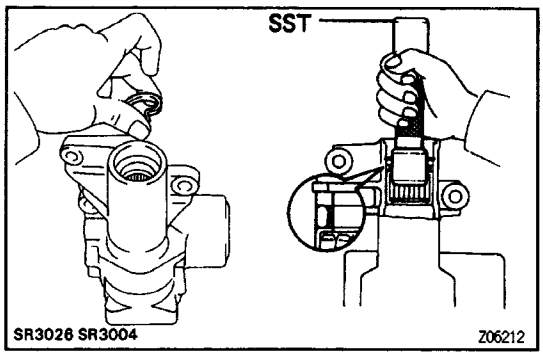

(m) Form a new teflon ring into a heart shape and install it by hand.
(n) Using SST, form the teflon ring.
NOTICE: The teflon ring must be squeezed before inserting the cross shaft or damage will result.
SST 09630–00013 (09631–00120)

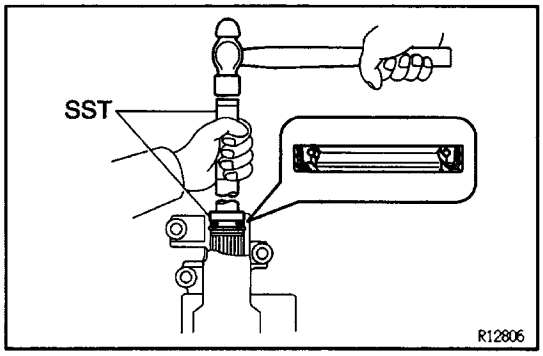

(o) Coat a new oil seal lip with power steering fluid.
(p) Using SST, drive the oil seal into the gear housing.
SST 09630–00013 (09631–00020, 09631–00090)
NOTICE: Make sure you install the oil seal facing the correct direction.

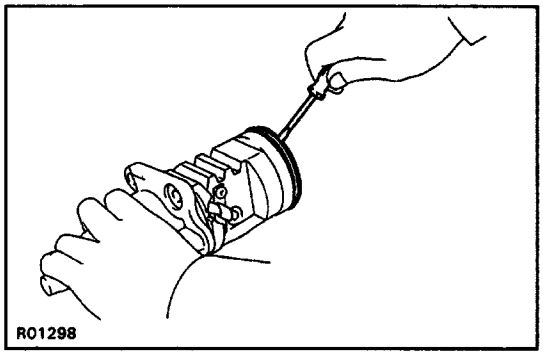

5. IF NECESSARY, REPLACE TEFLON RING AND 0–RING
(a) Using a screwdriver, remove the teflon ring and O–ring.
NOTICE: Be careful not to damage the control valve.
(b) Coat a new O–ring with power steering fluid and install it.
(c) Expand a new teflon ring with your fingers.
NOTICE: Be careful not to over–expand the teflon ring.
(d) Install the teflon ring.
(e) Coat the teflon ring with power steering fluid and snug it down with piston ring compressor for 5 – 7 minutes.

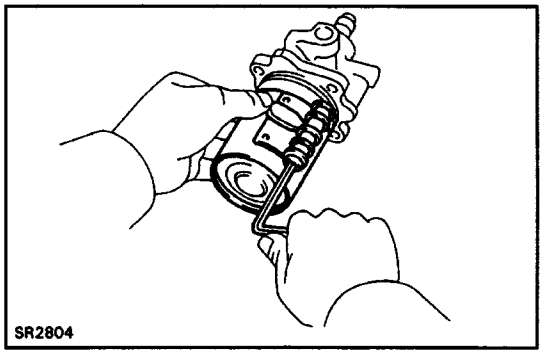

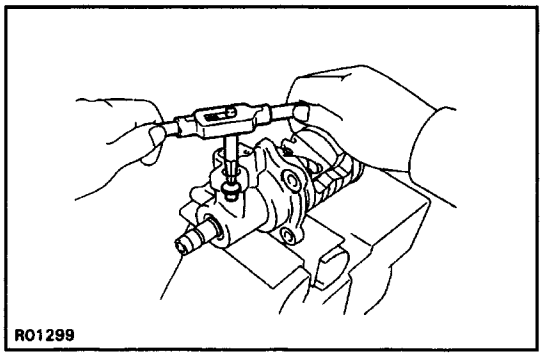

6. IF NECESSARY, REPLACE UNION SEATS
(a) Using a screw extractor, remove the 2 union seats.

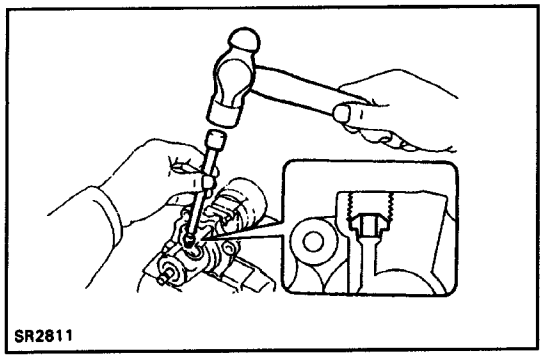

(b) Using a hammer and extension bar, tap in a new union seat.

POWER STEERING GEAR ASSEMBLY

NOTICE: When using a vise, do not overtighten it.

1. INSTALL CONTROL VALVE ASSEMBLY

(a) Coat a new 2 O–rings with power steering fluid.

(b) Install the 2 O–rings to the valve assembly.

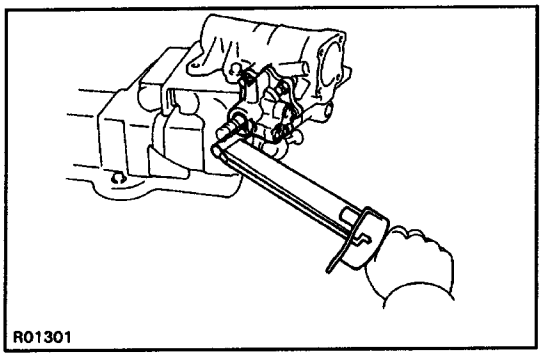

(c) Secure the gear housing on SST and clamp SST in vise.

SST 09630–00013 (09631–00141)

(d) Torque the 4 bolts.

Torque: 61 N–m (620 kgf–cm, 45 ft–lbf)

NOTICE: Be careful not to damage the teflon ring.

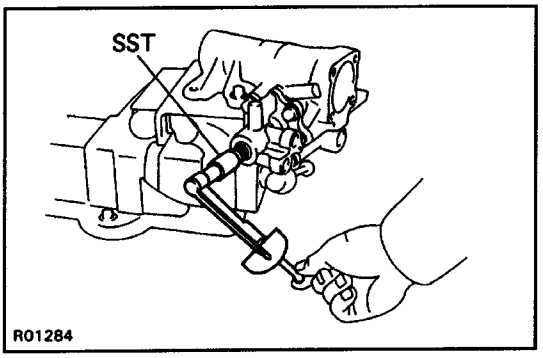

(e) Using SST, check the control valve assembly rotating.
SST 09616 – 00010

Rotating torque:

0.3 – 0.5 N–m (3 – 5.5 kgf–cm, 2.6 – 4.8 in.–lbf)

HINT: Hold the power piston nut to prevent it from turning.

If rotating torque is not correct, replace the control valve assembly.

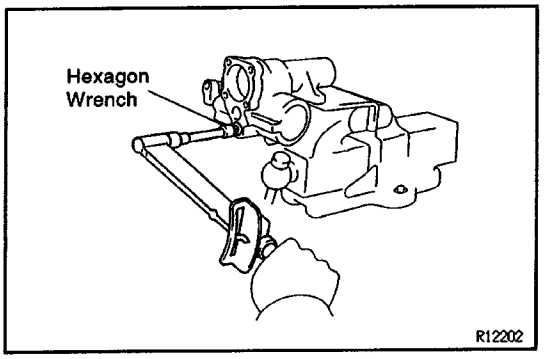

2. INSTALL POWER PISTON PLUNGER GUIDE, POWER PISTON PLUNGER, COMPRESSION SPRING AND POWER PISTON PLUNGER GUIDE NUT

(a) Install the plunger, plunger guide and spring.

(b) Coat a new O–ring with power steering fluid.

(c) Install the O–ring to the plunger guide nut and install the plunger guide nut with a hexagon wrench (10 mm).

Torque: 20 N–m (205 kgf–cm, 15 ft–lbf)

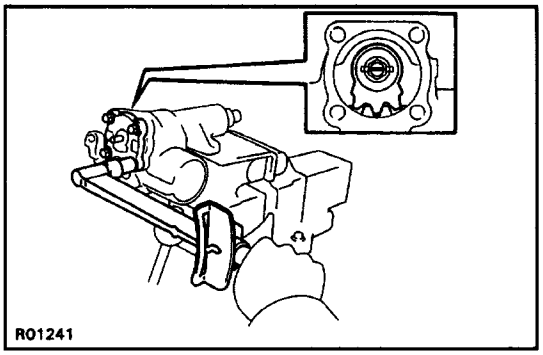

3. INSTALL CROSS SHAFT AND SIDE COVER

(a) Coat a new O–ring with power steering fluid.
(b) Install the O–ring on the side cover.
(c) Assemble the cross shaft to the side cover.
HINT: Fully loosen the adjusting screw.
(d) Set the worm gear at the center of the gear housing.
(e) Install and push the cross shaft into the gear housing so that the center teeth mesh together.
(f) Torque the 4 bolts in a diagonal pattern.
Torque: 61 N–m (620 kgf–cm, 45 ft–lbf)

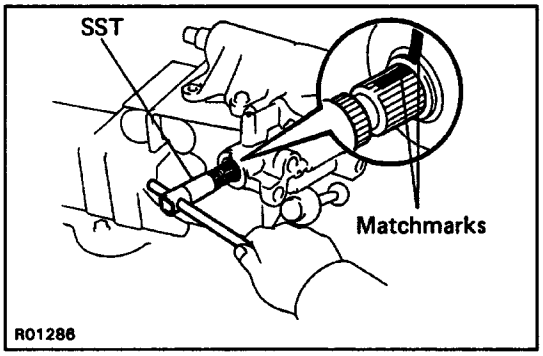

4. DETERMINE CENTER POSITION OF PS GEAR HOUSING

(a) Using SST, turn the worm shaft so full lock in both directions and determine the exact center.
SST 09616–00010
(b) Place matchmarks on the worm shaft and gear housing to show neutral position.

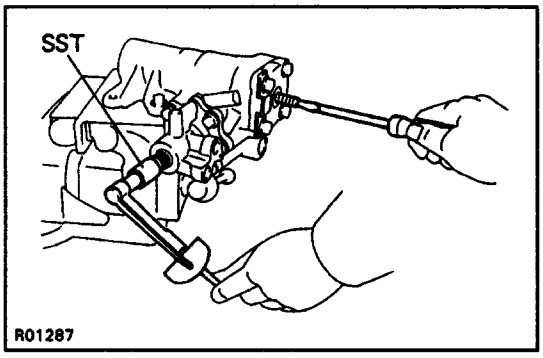

5. ADJUST CROSS SHAFT ADJUSTING SCREW

(a) Install SST with a torque wrench on the worm shaft.
SST 09616 – 00010
(b) Turn the adjusting screw until the preload is with in specification.
Preload (Turning):
0.2 – 0.4 N–m (2 – 4 kgf–cm, 1.7 – 3.5 in.–lbf)

6. INSTALL NEW WASHER

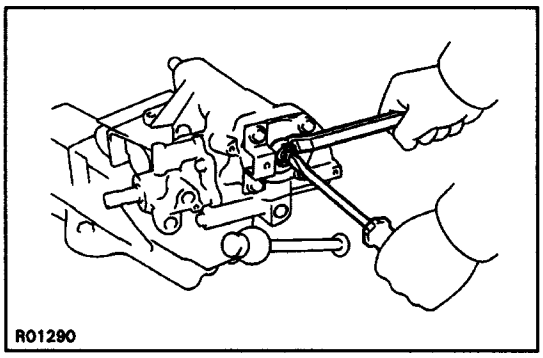

7. INSTALL LOCK NUT

Torque the lock nut while holding the adjusting screw.
Torque: 48 N–m (470 kgf–cm, 34 ft–lbf)

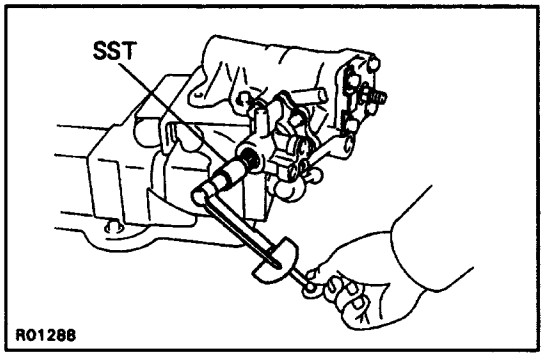

8. CHECK TOTAL PRELOAD

Using SST and a torque wrench, check total preload.
SST 09616 – 00010
Total preload (Turning):
0.5 – 0.9 N–m (5 – 9.5 kgf–cm, 4.3 – 8.3 in.–lbf)

POWER STEERING VANE PUMP (22R–E)

POWER STEERING VANE PUMP REMOVAL AND INSTALLATION

Remove and install the parts, as shown.

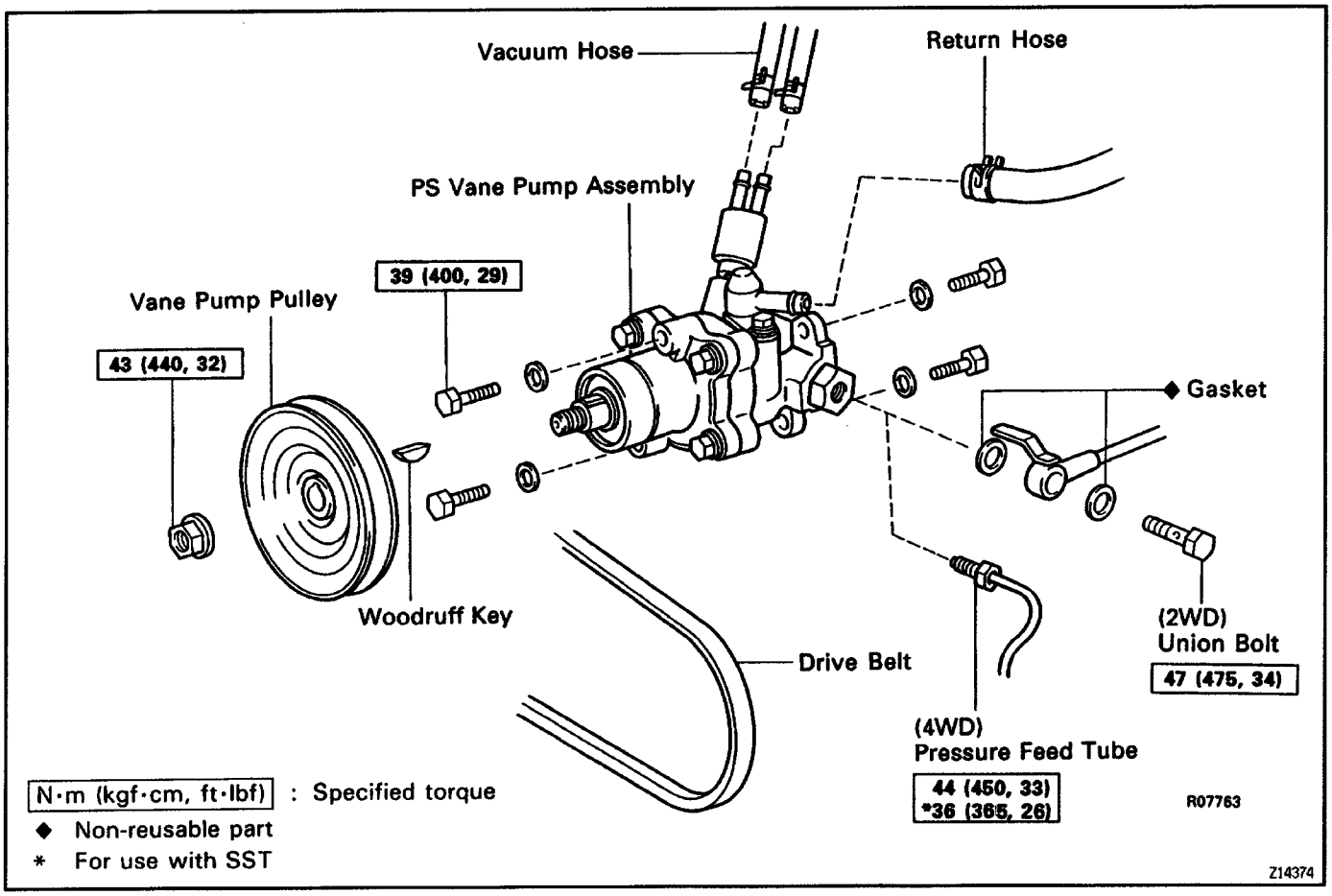

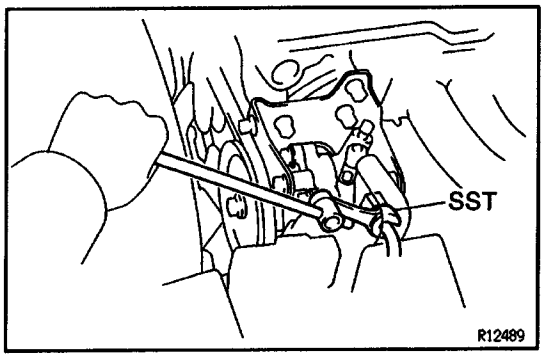

MAIN POINTS OF REMOVAL AND INSTALLATION

1. DISCONNECT AND CONNECT PRESSURE FEED TUBE

4WD:

Using SST, disconnect and connect the pressure feed tube from/to the PS vane pump.

SST 09631–22020

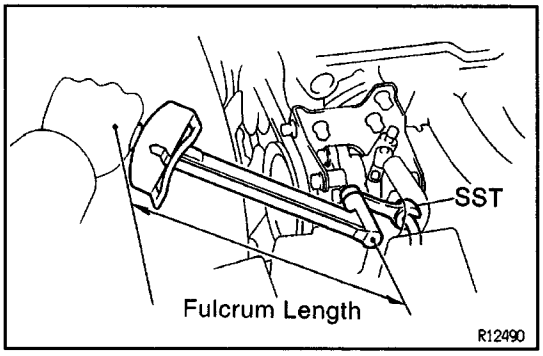

Torque: 36 N–m (365 kgf–cm, 26 ft–lbf)

HINT: Use a torque wrench with a fulcrum length of 300 mm (11.81 in.).

2WD:

Torque the union bolt with a new gasket on each side of the pressure feed tube.

Torque: 47 N–m (475 kgf–cm, 34 ft–lbf)

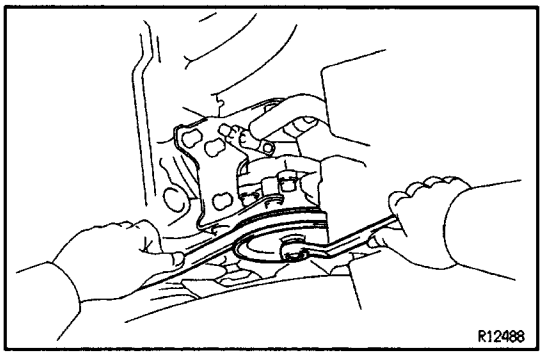

2. REMOVE AND INSTALL VANE PUMP PULLEY

Push on the drive belt with your hand to hold the pulley in place and loosen/torque the pulley nut.

Torque: 43 N–m (440 kgf–cm, 32 ft–lbf)

3. ADJUST DRIVE BELT TENSION AFTER INSTALLING PS VANE PUMP ASSEMBLY

(See page SR–29)

4. BLEED POWER STEERING SYSTEM

(See page SR–31)

COMPONENTS

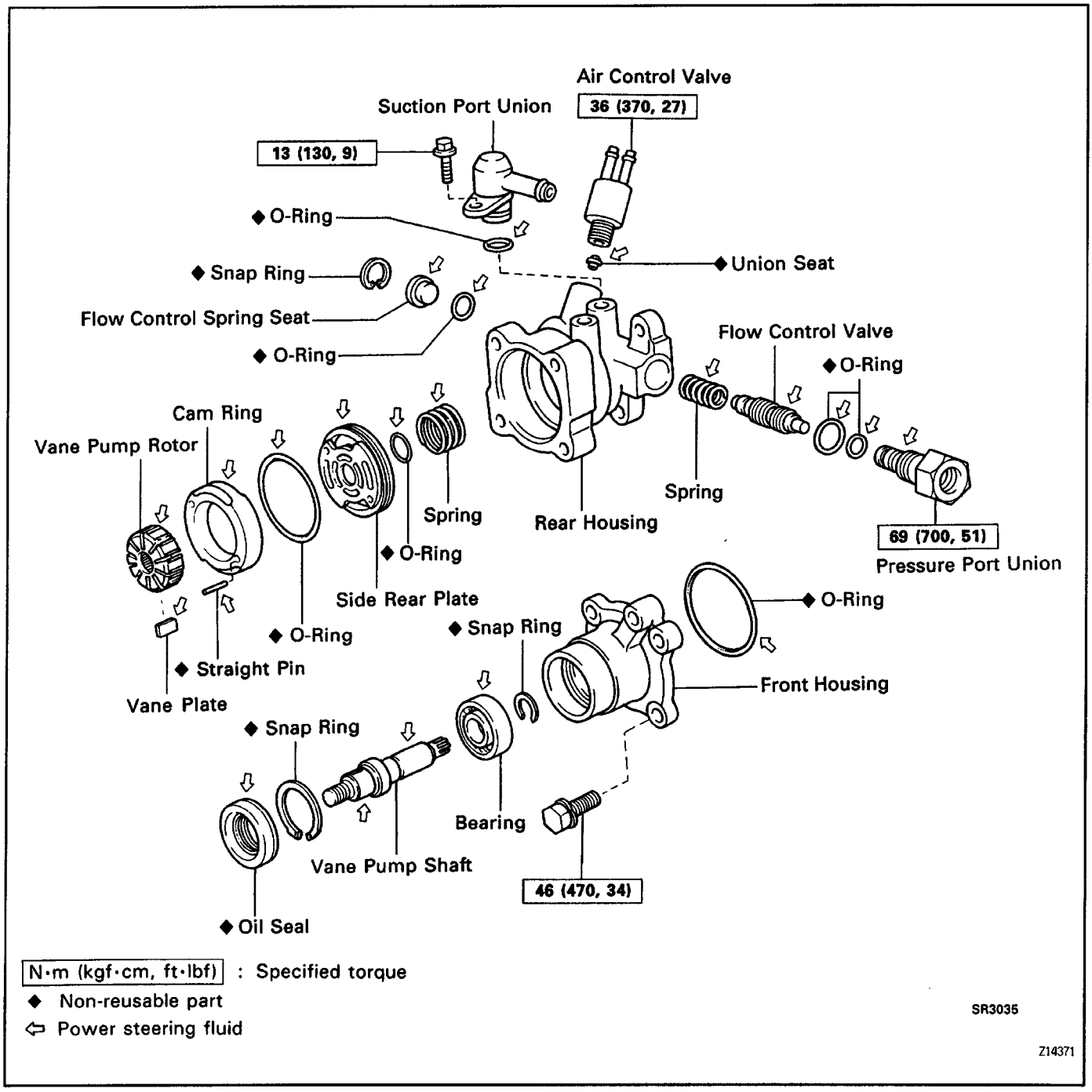

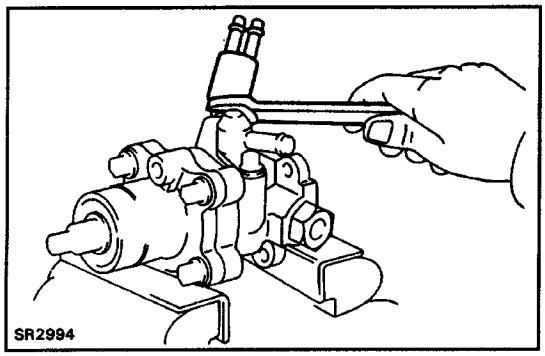

POWER STEERING VANE PUMP DISASSEMBLY

NOTICE: When using a vise, do not overtighten it.

1. REMOVE AIR CONTROL VALVE

(a) Remove the air control valve.

(b) Remove the union seat.

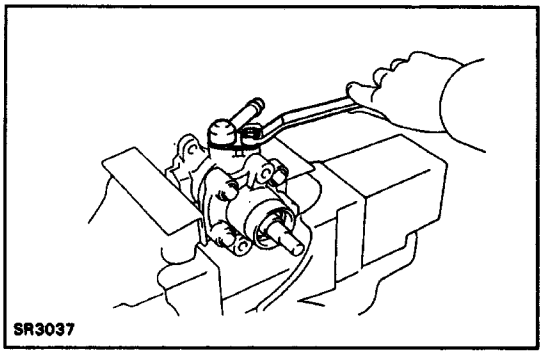

2. REMOVE SUCTION PORT UNION

(a) Remove the bolt and union.

(b) Remove the O–ring from the union.

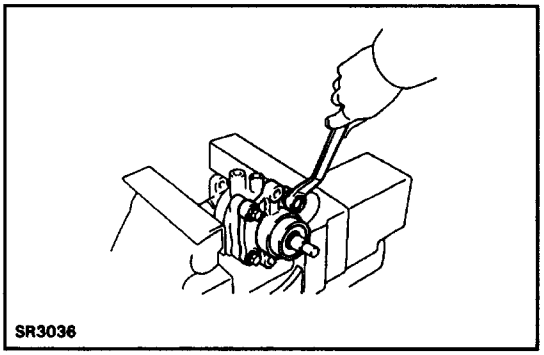

3. REMOVE FRONT HOUSING

(a) Remove the 4 bolts.

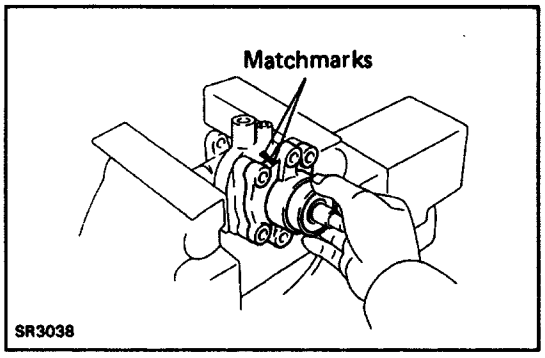

(b) Place matchmarks on the front and rear housing.

(c) Using a plastic hammer, tap off the front housing.

NOTICE: Be careful that the vane plates, rotor and cam ring do not fall out.

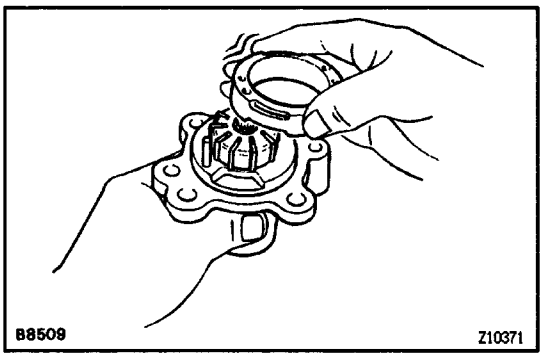

4. REMOVE CAM RING, VANE PUMP ROTOR AND 10 VANE PLATES

NOTICE: Be careful not to scratch the cam ring, rotor or vane plates.

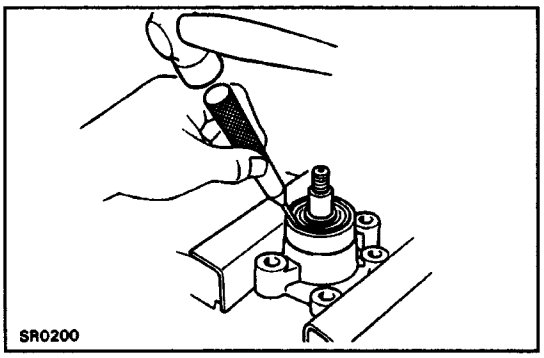

5. REMOVE VANE PUMP SHAFT

(a) Using a chisel and hammer, pry off the oil seal.

(b) Using snap ring pliers, remove the snap ring.

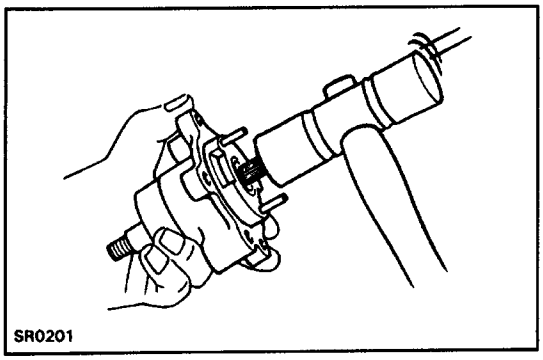

(c) Using a plastic hammer, tap out the rotor from the front housing.

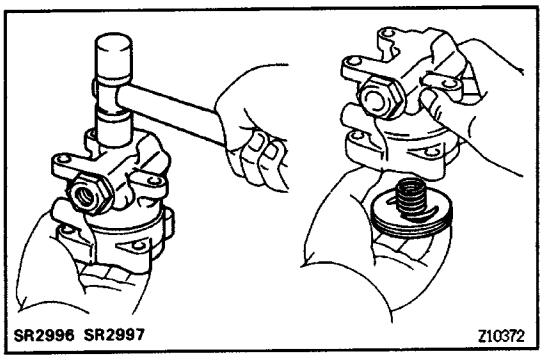

6. REMOVE SIDE REAR PLATE AND SPRING

Using a plastic hammer, tap the bottom end of the rear housing, and remove the plate and spring.

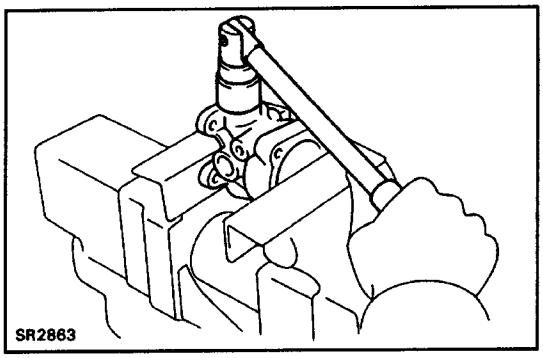

7. REMOVE PRESSURE PORT UNION

(a) Remove the pressure port union.
(b) Remove the 2 O–rings from the union.

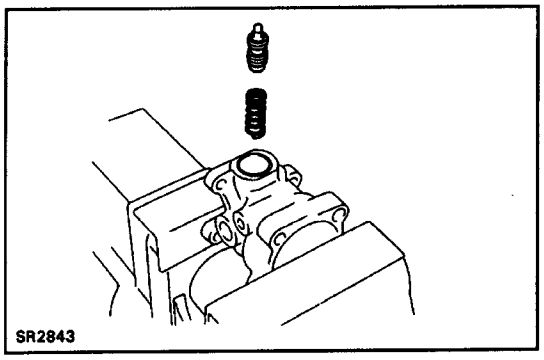

(c) Remove the flow control valve and spring.

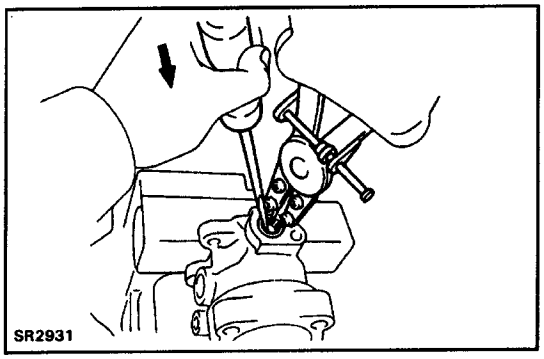

8. REMOVE FLOW CONTROL VALVE SPRING SEAT

(a) Temporarily install a bolt to the spring seat.
(b) Push the bolt and remove the snap ring with snap ring pliers.

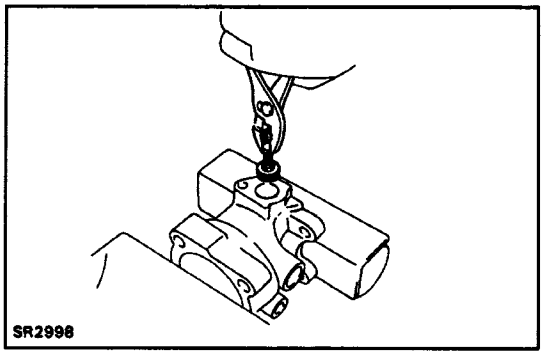

(c) Pull out the bolt and remove the spring seat.
(d) Remove the O–ring from the spring seat.

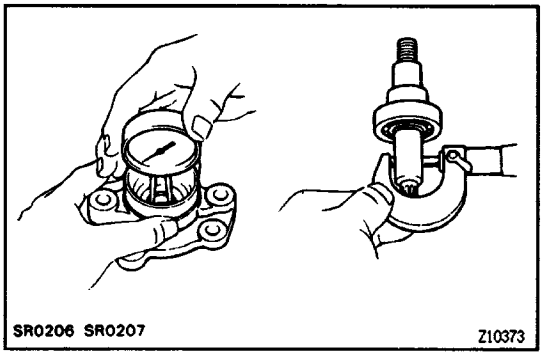

POWER STEERING VANE PUMP INSPECTION AND REPLACEMENT

NOTICE: When using a vise, do not overtighten it.

1. MEASURE OIL CLEARANCE BETWEEN VANE PUMP SHAFT AND BUSHING

Using a micrometer and calipers, measure the oil clearance.

Standard clearance:

0.030–0.047 mm (0.0012–0.0019 in.)

Maximum oil clearance:

0.07 mm (0.0028 in.)

If more than maximum, replace the entire PS vane pump.

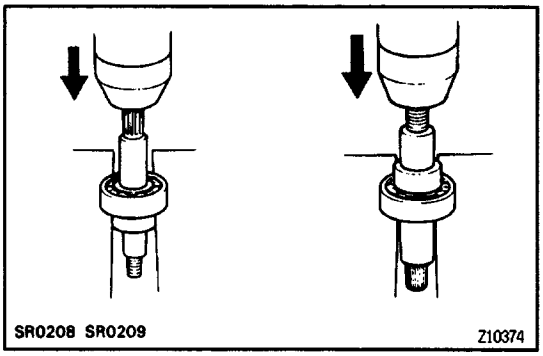

2. IF NECESSARY, REPLACE BEARING

(a) Using snap ring pliers, remove the snap ring.
(b) Using a press, press out the bearing.
(c) Coat a new bearing with power steering fluid.
(d) Using a press, press in the bearing.
(e) Using snap ring pliers, install a new snap ring.

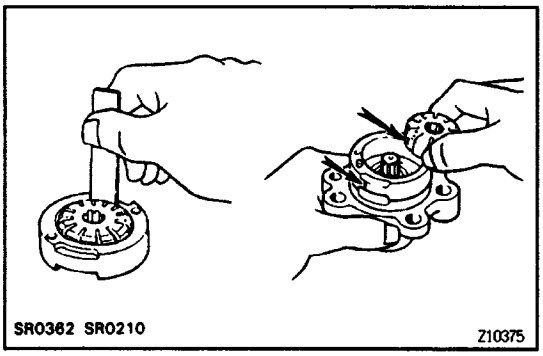

3. INSPECT VANE PUMP ROTOR AND CAM RING

Measure the cam ring thickness. Check that the difference between the rotor and cam ring measurement is less than maximum.

Maximum difference:

0.06 mm (0.0024 In.)

If the difference is excessive, replace the cam ring with one having the same letter as on the rotor.

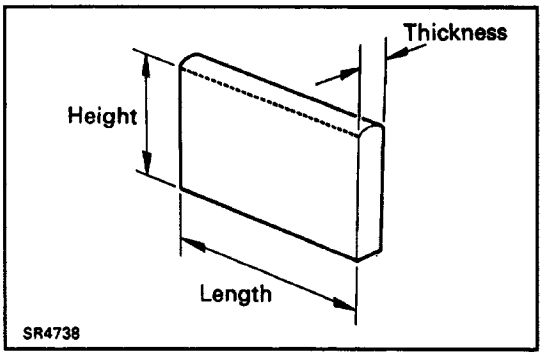

4. INSPECT VANE PUMP ROTOR AND VANE PLATES

(a) Using a micrometer, measure the height, thickness and length of the vane plates.

Minimum height:

7.8 mm (0.307 in.)

Minimum thickness:

1.7 mm (0.067 in.)

Minimum length:

14.97 mm (0.5894 in.)

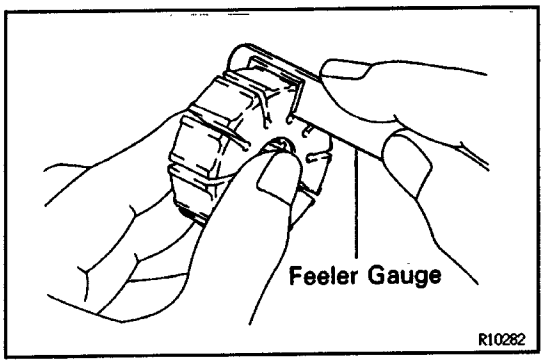

(b) Using a feeler gauge, measure the clearance between the rotor groove and vane plate.

Maximum clearance:

0.06 mm (0.0024 in.)

If more than maximum, replace the vane plate and/or rotor with one having the same mark stamped on the cam ring.

Inscribed mark:

1. 2. 3. 4. or None

HINT: There are 5 vane lengths with the following rotor and cam ring numbers:

Rotor and cam ring mark	Vane length mm (in.)
None	14.996 – 14.998 (0.59039 – 0.59047)
1	14.994 – 14.996 (0.59031 – 0.59039)
2	14.992 – 14.994 (0.59024 – 0.59031)
3	14.990 – 14.992 (0.59016 – 0.59024)
4	14.988 – 14.990 (0.59008 – 0.59016)

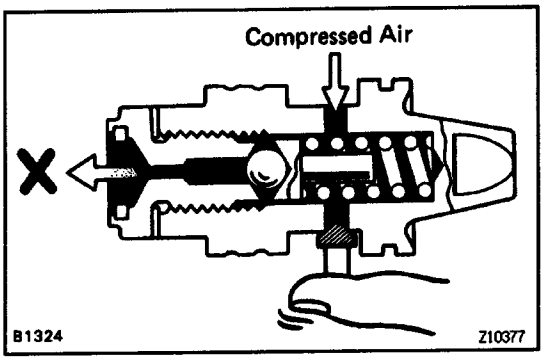

5. INSPECT FLOW CONTROL VALVE

(a) Check the flow control valve for wear or damage.

(b) Apply fluid to the valve and check that if falls smoothly into the valve hole by its own weight.

(c) Check the flow control valve for leakage. Close one of the holes and apply 392–490 kPa (4–5 kgf/cm^2, 57–71 psi) of compressed air into the opposite side, and confirm that air does not come out from the end holes.

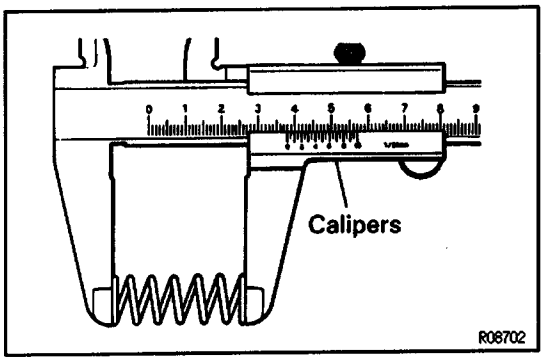

6. INSPECT SPRING

Using calipers, measure the free length of the spring.

Spring length:

47–50 mm (1.85–1.97 in.)

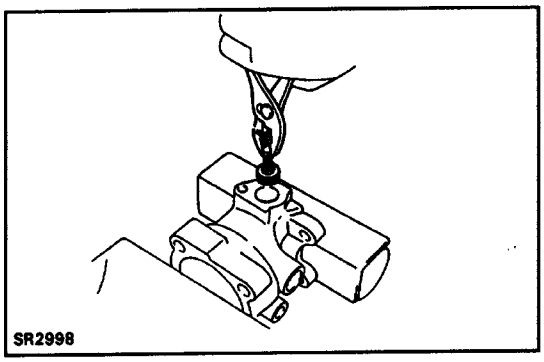

POWER STEERING VANE PUMP ASSEMBLY

NOTICE: When using a vise, do not overtighten it.

1. COAT WITH POWER STEERING FLUID

(See page SR–37)

2. INSTALL FLOW CONTROL VALVE SPRING SEAT

(a) Coat a new O–ring with power steering fluid.

(b) Install the O–ring to the spring seat.

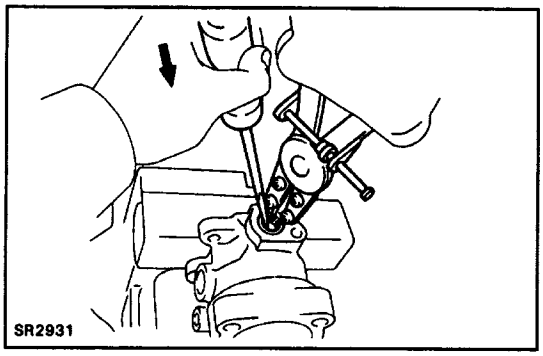

(c) Install the spring seat to the housing.
(d) Using snap ring pliers, install a new snap ring.

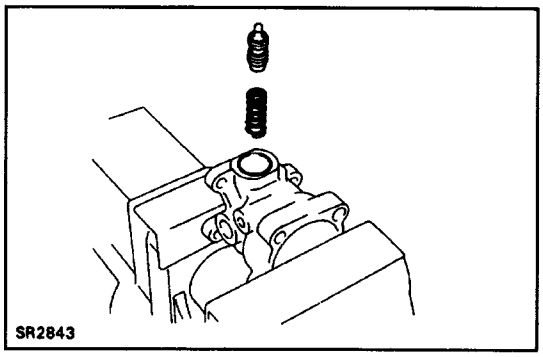

3. INSTALL FLOW CONTROL VALVE AND SPRING

(a) Coat a new O–ring with power steering fluid.
(b) Install the O–ring to the housing.
(c) Insert the spring and control valve.

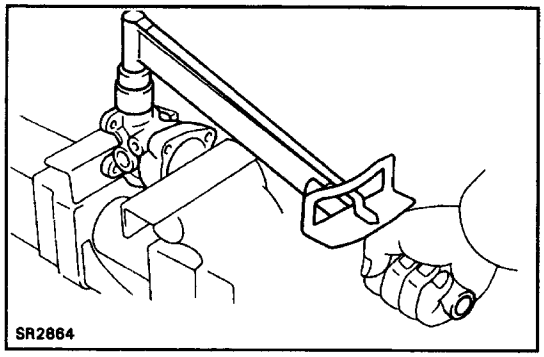

4. INSTALL PRESSURE PORT UNION

(a) Coat a new O–ring with power steering fluid.
(b) Install the O–ring to the pressure port union.
(c) Torque the union.
Torque: 69 N–m (700 kgf–cm, 51 ft–lbf)

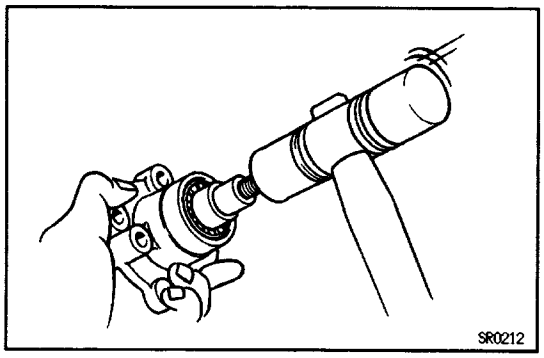

5. INSTALL VANE PUMP SHAFT

(a) Install the pump shaft into the front housing by tapping it in with a plastic hammer.
(b) Using snap ring pliers, install a new snap ring.

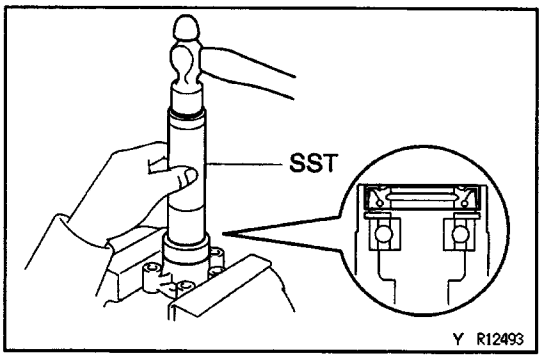

(c) Coat a new oil seal lip with power steering fluid.
(d) Using SST and a hammer, install the oil seal.
SST 09608–30012 (09608–04030)

NOTICE: Make sure you install the oil seal facing the correct direction.

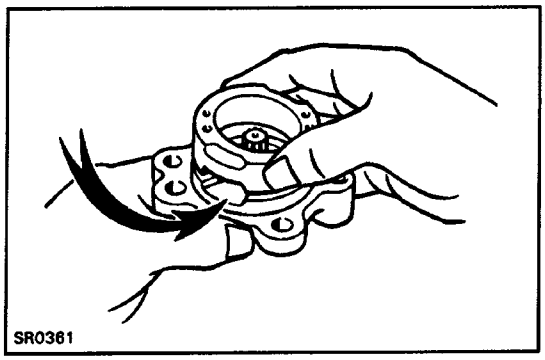

6. INSTALL CAM RING

Align the fluid passages of the cam ring and front housing, and install the cam ring.

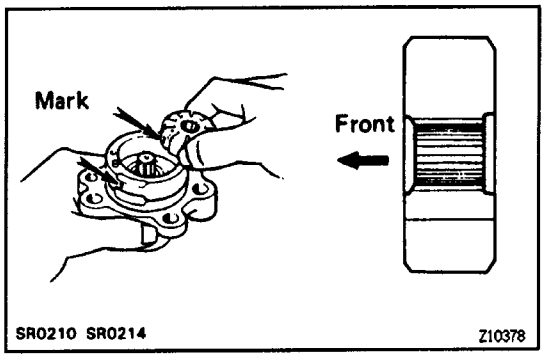

7. INSTALL VANE PUMP ROTOR

Install the rotor with the chamfered end facing toward the front.

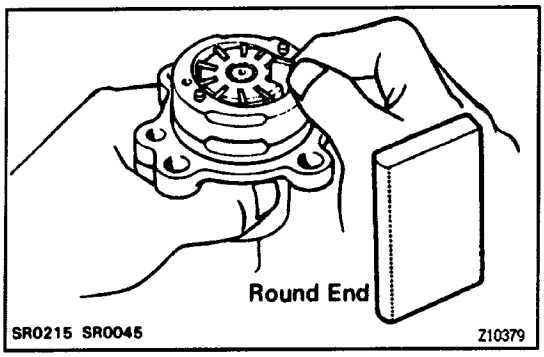

8. INSTALL VANE PLATES

(a) Coat the 10 vane plates with power steering fluid.

(b) Install the plates with the round end facing outward.

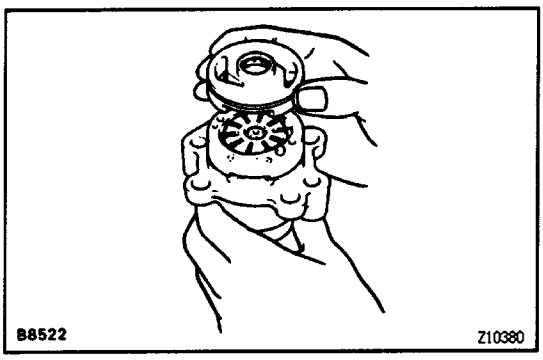

9. INSTALL SIDE REAR PLATE AND SPRING

(a) Align the fluid passages of the rear plate and cam ring, and install the rear plate.

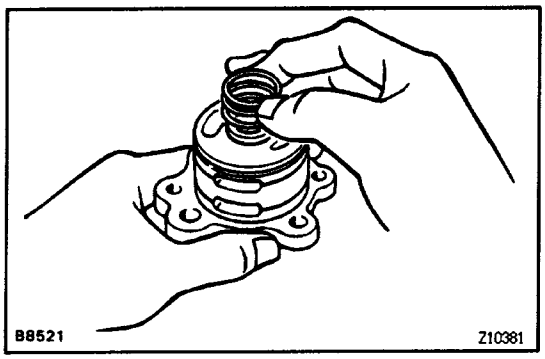

(b) Place the spring on the rear plate.

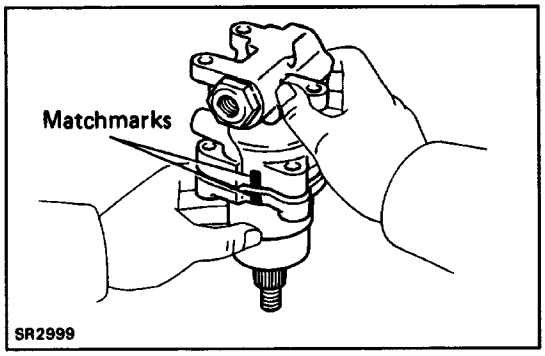

10. INSTALL REAR HOUSING

(a) Align the matchmarks on the front and rear housings and assemble them.

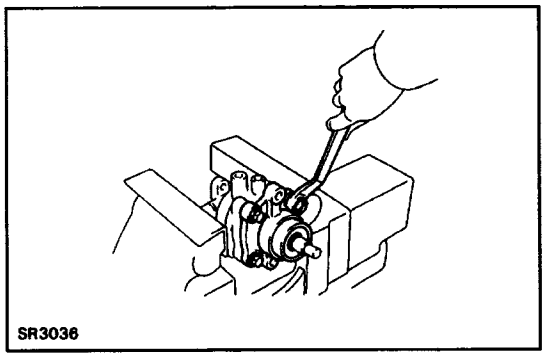

(b) Torque the 4 bolts evenly in 3 or 4 passes.

Torque: 46 N–m (470 kgf–cm, 34 ft–lbf)

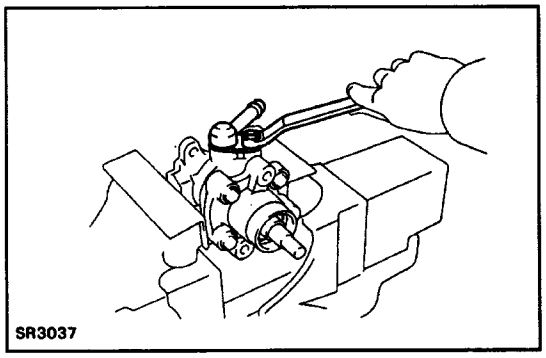

11. INSTALL SUCTION PORT UNION

(a) Coat a new O–ring with power steering fluid.

(b) Install the O–ring to the union.

(c) Torque the bolt.

Torque: 13 N–m (130 kgf–cm, 9 ft–lbf)

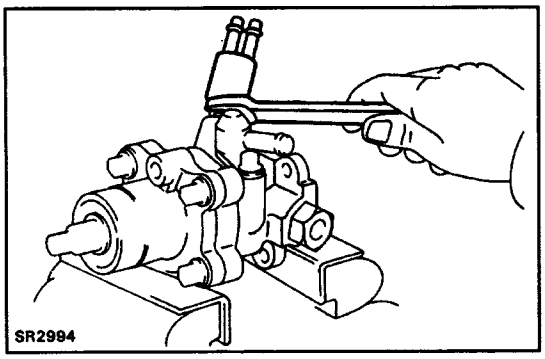

12. INSTALL AIR CONTROL VALVE

Install a new union seat and the valve.

Torque: 36 N–m (370 kgf–cm, 27 ft–lbf)

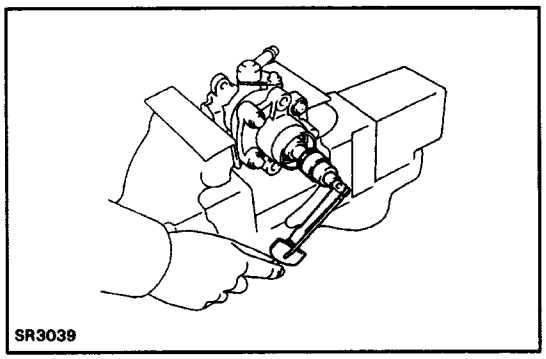

13. MEASURE PS VANE PUMP ROTATING TORQUE

(a) Check that the pump shaft rotates smoothly without abnormal noise.

(b) Temporarily install the pulley nut and using a torque wrench check the pump rotating torque.

Rotation torque:

0.3 N–m (2.8 kgf–cm, 2.4 in.–lbf)

PREPARATION

SST (SPECIAL SERVICE TOOLS)

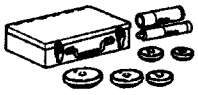	**09608–30012** Front Hub & Drive Pinion Bearing Tool Set	
	**(09608–04030)** Front Hub Inner Bearing Cone Replacer	Oil seal
	**09612–65014** Steering Worm Bearing Puller	
	**(09612–01030)** Claw "C"	Needle roller bearing
	**09616–00010** Steering Worm Bearing Adjusting Socket	Control valve assembly
	**09628–62011** Ball Joint Puller	Pitman arm
	**09630–00013** Power Steering Gear Housing Overhaul Tool set	
	**(09631–00020)** Handle	Control valve housing oil seal and bearing
	**(09631–00050)** No. 3 Wrench	Lock nut
	**(09631–00090)** Replacer	Control valve housing oil seal and bearing
	**(09631–00120)** Teflon Ring Former	Teflon ring
	**(09631–00141)** Overhaul Stand	Power steering gear housing
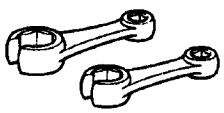	**09631–22020** Power Steering Hose Nut 14 x 17 mm Wrench Set	Pressure feed and return tubes

RECOMMENDED TOOLS

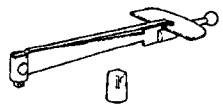	09025–00010	Torque Wrench (30 kgf–cm) .	For measuring preload
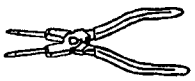	09905–00013	Snap Ring Pliers .	Snap ring

EQUIPMENT

Belt tension gauge	Measuring drive belt tension
Calipers	Measuring spring free length
Dial indicator	Measuring steering rack runout
Micrometer	Measuring pump shaft diameter Measuring vane plate
Oil pressure gauge	Measuring PS fluid pressure
Torque wrench	
Vacuum gauge	

LUBRICANT

Item	Capacity	Classification
Power steering fluid Total	**0.64 liters (0.676 US qts, 0.563 Imp.qts)**	ATF DEXRON ® II

SERVICE SPECIFICATIONS

SERVICE DATA

Steering wheel freeplay	Maximum	30 mm (1.18 in.) or less
TILT STEERING COLUMN		
Pawl stopper	Mark	
	1 or A	12.65 – 12.75 mm (0.4980 – 0.5020 in.)
	2 or B	12.55 – 12.65 mm (0.4941 – 0.4980 in.)
	3 or C	12.45 – 12.55 mm (0.4902 – 0.4941 in.)
	4 or D	12.35 – 12.45 mm (0.4862 – 0.4902 in.)
	5 or E	12.25 – 12.35 mm (0.4823 – 0.4862 in.)
PS ON–VEHICLE INSPECTION		
Drive belt deflection	New belt	100 – 150 lbf
Drive belt deflection	Used belt	60 – 100 lbf
Maximum rise of oil level		5 mm (0.20 in.)
Oil pressure at idle speed with valve closed	22R–E Minimum	7,355 kPa (75 kgf/cm², 1,067 psi)
	3VZ–E Minimum	7,845 kpa (80 kgf/cm², 1,138 psi)
Steering effort		5.9 N·m (60 kgf·cm, 8.8 in.·lbf)
PS VANE PUMP		
22R–E:		
Rotor shaft bushing oil clearance	STD	0.030 – 0.047 mm (0.0012 – 0.0019 in.)
Rotor shaft bushing oil clearance	Maximum	0.07 mm (0.0028 in.)
Rotor to cam ring oil clearance	Maximum	0.06 mm (0.0024 in.)
Vane plate to rotor groove clearance	Maximum	0.06 mm (0.0024 in.)
Vane plate length	Minimum	14.97 mm (0.5894 in.)
Vane plate height	Minimum	7.8 mm (0.307 in.)
Vane plate thickness	Minimum	1.7 mm (0.067 in.)
Vane plate length	Pump rotor and cam ring marks	
	None	14.996 – 14.998 mm (0.59039 – 0.59047 in.)
	1	14.994 – 14.996 mm (0.59031 – 0.59039 in.)
	2	14.992 – 14.994 mm (0.59024 – 0.59031 in.)
	3	14.990 – 14.992 mm (0.59016 – 0.59024 in.)
	4	14.988 – 14.990 mm (0.59008 – 0.59016 in.)
Flow control valve spring length	STD	50 mm (1.97 in.)
Flow control valve spring length	Minimum	47 mm (1.85 in.)
Pump rotating torque	Maximum	0.3 N·m (2.8 kgf·cm, 2.4 in.·lbf)
3VZ – E:		
Rotor shaft bushing oil clearance	STD	0.01 – 0.03 mm (0.0004 – 0.0012 in.)
Rotor shaft bushing oil clearance	Maximum	0.07 mm (0.0028 in.)
Vane plate to rotor groove clearance	Maximum	0.03 mm (0.0012 in.)
Vane plate length	Minimum	14.988 mm (0.5901 in.)
Vane plate height	Minimum	8.1 mm (0.319 in.)
Vane plate thickness	Minimum	1.797 mm (0.0707 in.)
Vane plate length	Pump rotor and cam ring marks	
	None	14.996 – 14.998 mm (0.59039 – 0.59047 in.)
	1	14.994 – 14.996 mm (0.59031 – 0.59039 in.)
	2	14.992 – 14.994 mm (0.59024 – 0.59031 in.)
	3	14.990 – 14.992 mm (0.59016 – 0.59024 in.)
	4	14.988 – 14.990 mm (0.59008 – 0.59016 in.)

Flow control valve spring length	STD	37 mm (1.46 in.)
Flow control valve spring length	Minimum	35 mm (1.38 in.)
Pump rotating torque	Maximum	0.3 N·m (2.8 kgf·cm, 2.4 in.·lbf)
PS GEAR		
Worm gear valve body ball clearance		0.15 mm (0.059 in.)
Cross shaft adjusting screw thrust clearance		0.03–0.05 mm (0.0012–0.0020 in.)
Worm gear preload		0.3–0.5 N·m (3–5.5 kgf·cm, 2.6–4.8 in.·lbf)
Total preload		0.5–0.9 N·m (5–9.5 kgf·cm, 4.3–8.3 in.·lbf)

TORQUE SPECIFICATIONS

Part tightened		N·m	kgf·cm	ft·lbf
STEERING COLUMN				
Main shaft assembly x Intermediate No.2 shaft		35	360	26
Steering column assembly x Body		25	260	19
Steering wheel		34	350	25
Column hole cover x Body		7.8	80	69in.·lbf
Intermediate No.2 shaft x Control valve assembly		35	360	26
Turn signal bracket x Column upper tube		7.8	80	69in.·lbf
Tilt pawl set nut		5.9	60	52in.·lbf
Tilt lever retainer set nut		15	150	11
Protector x Column tube		19	195	14
PS VANE PUMP				
PS vane pump x Pressure feed tube	22R–E(4WD)	36 (44)	365 (450)	26 (33)
PS vane pump x Pressure feed tube	22R–E(2WD), 3VZ–E	47	475	34
Pulley set nut		43	440	32
PS vane pump assembly	22R–E	39	400	29
PS vane pump x Bracket				
Through bolt	3VZ–E	58	590	43
Adjusting bolt	3VZ–E	39	400	29
PS vans pump x Adjusting stay	3VZ–E	41	420	30
Reservoir tank x PS vane pump	3VZ–E			
12 mm bolt		13	130	9
14 mm bolt		41	420	30
Suction port union	22R–E	13	130	9
Air control valve		36	370	27
Pressure port union		69	700	51
Front housing x Rear housing	22R–E	46	470	34
PS GEAR				
Pressure feed tube		36 (44)	365 (450)	26 (33)
Return hose		49	500	36
Intermediate No.2 shaft x Control valve assembly		35	360	26
Power steering gear x Body		142	1,450	105
Pitman arm x Cross shaft		177	1,800	130
Adjusting screw lock nut		46	470	34
Side cover set bolt		61	620	45
Bleeder plug		7.8	80	69in.·lbf

( ): For use without SST

Part tightened	N·m	kgf·cm	ft·lbf
Power piston plunger guide nut	20	205	15
Control valve assembly set bolt	61	620	45
Tie rod end x Knuckle arm	90	920	67
STEERING LINKAGE			
Pitman arm x Cross shaft	177	1,800	130
Pitman arm x Steering relay rod	90	920	67
Tie rod tube clamp nut	25	260	19
Tie rod X Steering relay rod	90	920	67
Tie rod x Knuckle arm	90	920	67
Steering relay rod x Idler arm	59	600	43
Steering relay rod x Steering damper	59	600	43
Knuckle arm x Steering knuckle	183	1,870	135
Idler arm x Idler arm bracket	78	800	58
Idler arm bracket Frame	142	1,450	105

STEERING LINKAGE

PREPARATION

SST (SPECIAL SERVICE TOOLS)

	**09223–46011** Crankshaft Front Oil Seal Replacer	Idler arm bracket cap
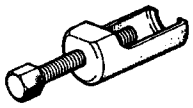	**09610–20012** Pitman Arm Puller	Idler arm
	**09611–22012** Tie Rod End Puller	Pitman arm Steering damper Tie rod Relay rod
	**09620–30010** Steering Gear Box Replacer Set	
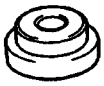	**(09624–30010)** Steering Sector Shaft Oil Seal Replacer	Oil seal
	**(09627–30010)** Steering Sector Shaft Bushing Replacer	Bushing
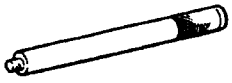	**(09631–00020)** Handle	Oil seal Bushing
	**09628–62011** Ball Joint Puller	Pitman arm Knuckle arm Tie rod

RECOMMENDED TOOLS

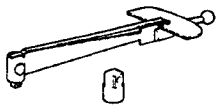	09025–00010	Torque Wrench (30 kgf–cm) .	Measuring idler arm rotating torque

EQUIPMENT

Torque wrench	

SSM (SPECIAL SERVICE MATERIALS)

08826–00090	Seal Packing 1281, THREE BOND 1281 or equivalent (FIPG)	Idler arm bracket cap

STEERING LINKAGE

STEERING LINKAGE REMOVAL AND INSTALLATION

Remove and install the parts, as shown.

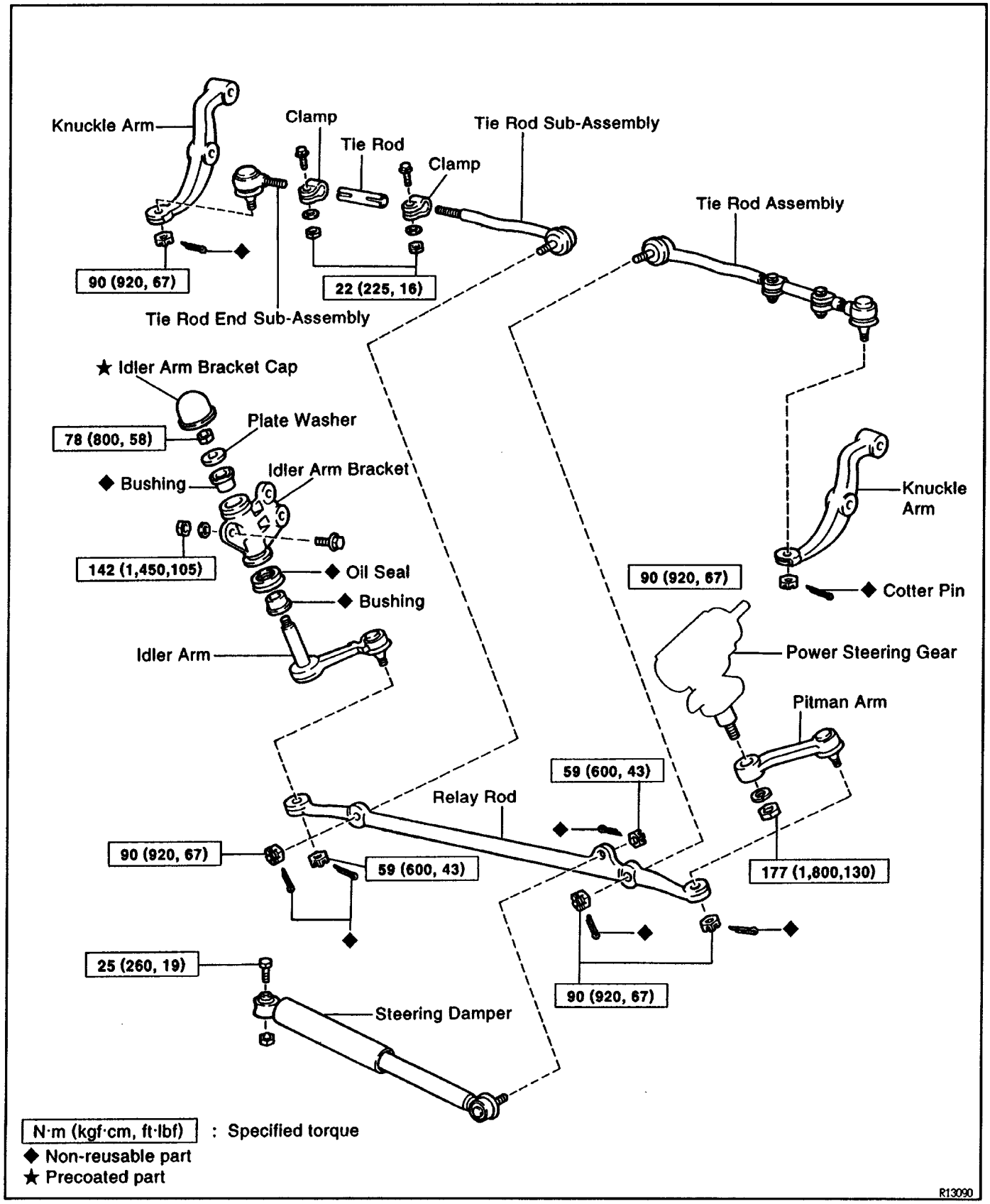

HINT:

- When connecting the ball stud to the arm or rod, remove the grease on the joint surfaces.
- After torquing the ball stud nut to specified torque, advance the nut just enough to insert a new cotter pin.
- After installing any of the steering linkage components, check the front wheel alignment. (See page SA–4)

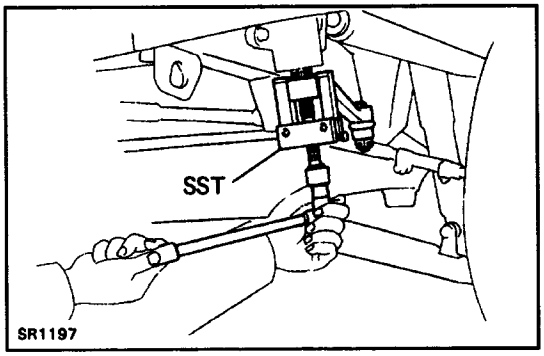

MAIN POINTS OF REMOVAL AND INSTALLATION

1. DISCONNECT AND CONNECT PITMAN ARM

(a) Using SST, disconnect the pitman arm from the cross shaft.
SST 09628–62011

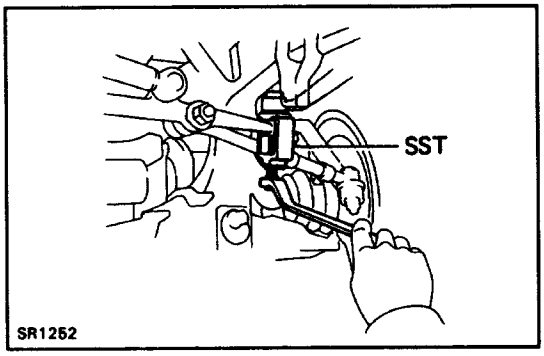

(b) Using SST, disconnect the pitman arm from the relay rod.
SST 09611 –22012

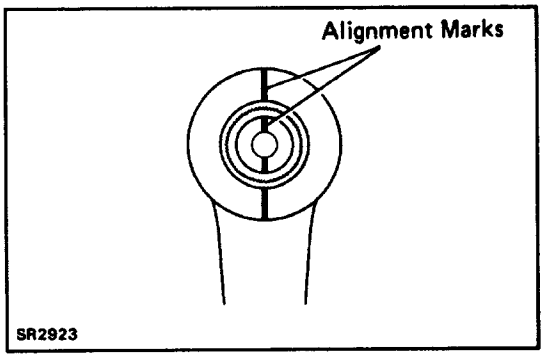

(c) Align the alignment marks on the pitman arm and cross shaft.

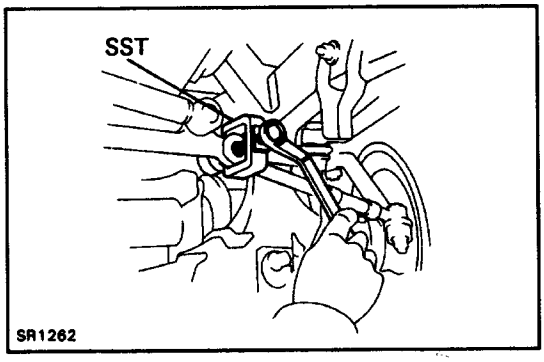

2. DISCONNECT AND CONNECT RH AND LH TIE ROD ASSEMBLYS

(a) Using SST, disconnect the tie rod assembly from the relay rod.
SST 09611 – 22012

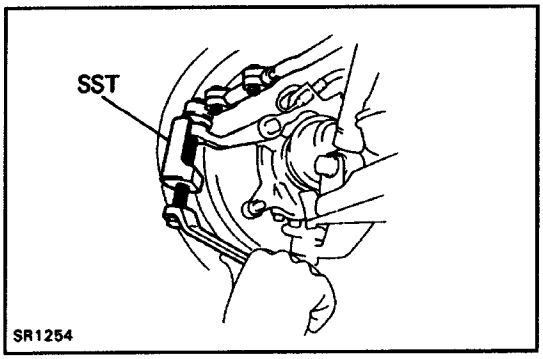

(b) Using SST, disconnect the tie rod assembly from the knuckle arm.
SST 09828–62011

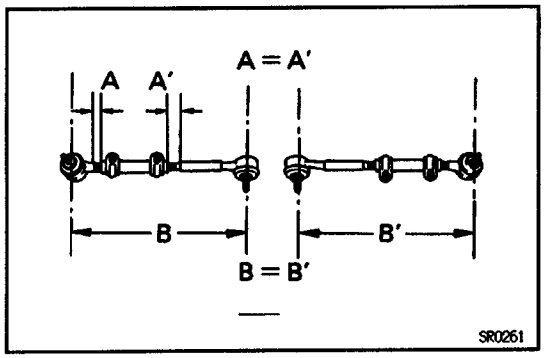

(c) Screw the tie rod end sub–assembly and tie rod sub –assembly into the tie rod.
HINT: The tie rod assembly length should be approximately 328.5 mm (12.933 in.), and the remaining length of threads on both tie rod assemblys should be equal.

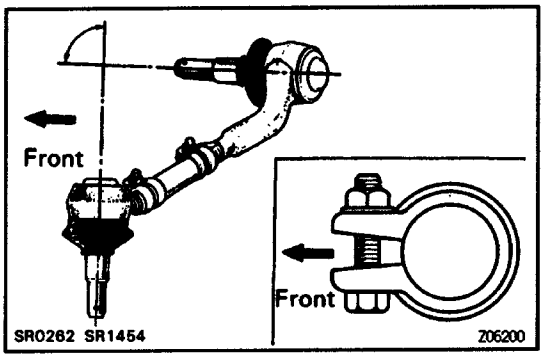

(d) Turn the tie rod end sub–assembly so that they cross at about 90 degrees.

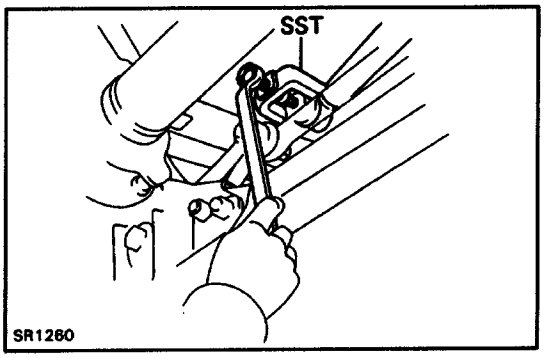

3. DISCONNECT STEERING DAMPER
Using SST, disconnect the steering damper from the relay rod.
SST 09611 – 22012

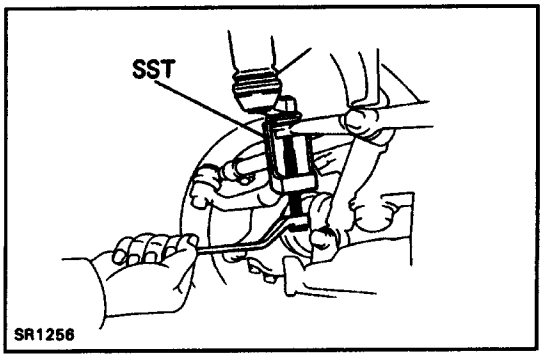

4. DISCONNECT IDLER ARM
Using SST, disconnect the idler arm from the relay rod.
SST 09610–20012

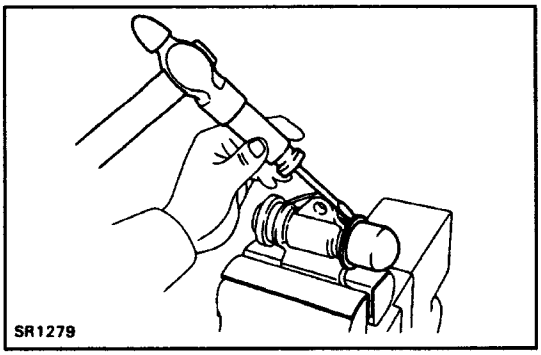

IDLER ARM DISASSEMBLY

NOTICE: When using a vise, do not overtighten it.

1. REMOVE IDLER ARM BRACKET CAP

Using a screwdriver and hammer, remove the idler arm bracket cap.

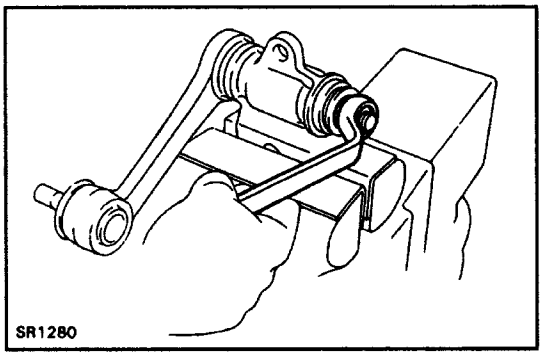

2. REMOVE IDLER ARM

Remove the nut, plate washer and pull out the idler arm from the idler arm bracket.

3. REMOVE OIL SEAL

Remove the oil seal from the idler arm bracket.

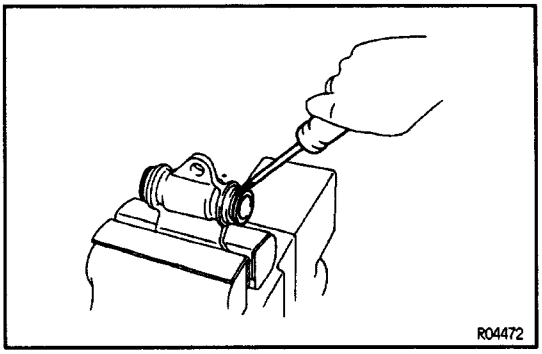

4. REMOVE BUSHINGS

Using a screwdriver, remove the 2 bushings.

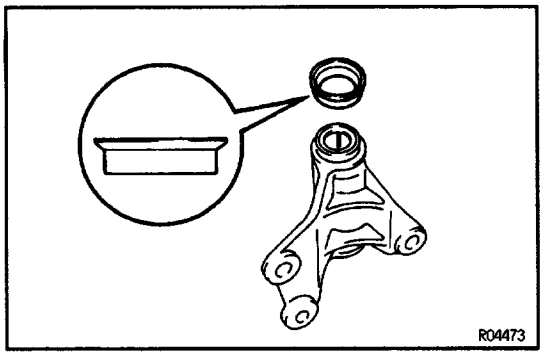

IDLER ARM ASSEMBLY

NOTICE: When using a vise, do not overtighten it.

1. INSTALL OIL SEAL

(a) Coat a new oil seal with NIP grease.

(b) Install the oil seal to the idler arm bracket.

NOTICE: Make sure you install the oil seal facing the correct direction.

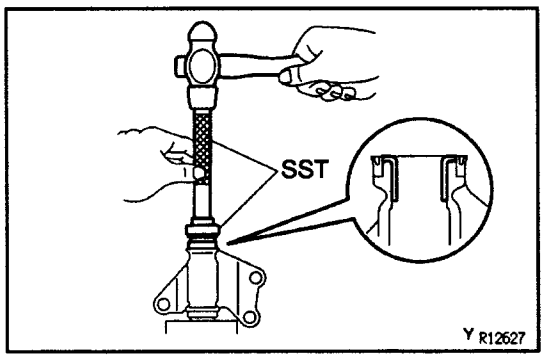

2. INSTALL BUSHINGS

(a) Coat inside of 2 new bushings with MP grease.

(b) Using SST and a hammer, tap in the 2 bushings to the idler arm bracket.

SST 09620–30010 (09627–30010, 09631–00020)

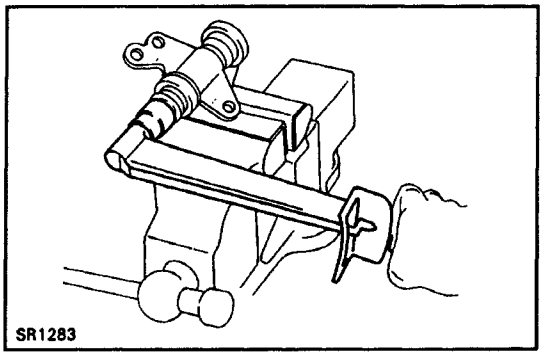

3. INSTALL IDLER ARM

(a) Coat the idler arm with MP grease.
(b) Install the idler arm to the idler arm bracket.
(c) Install the plate washer.
(d) Torque the nut.
Torque: 78 N–m (800 kgf–cm, 58 ft–lbf)

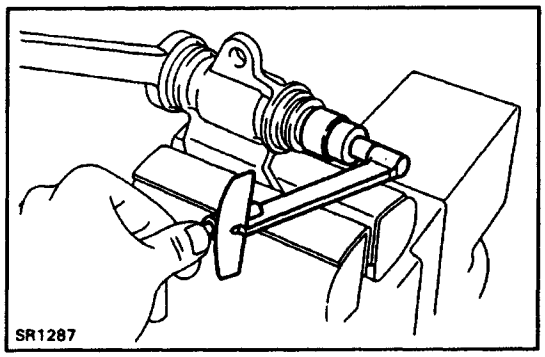

4. MEASURE IDLER ARM ROTATING TORQUE

Using a torque wrench, turn the nut several times and take the torque reading.
Torque (Turning):
0.5 – 2.9 N–m (5 – 30 kgf–cm, 5 – 26 in.–lbf)

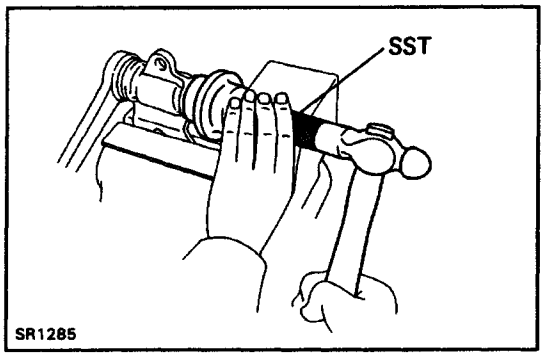

5. INSTALL IDLER ARM BRACKET CAP

(a) Apply sealant to the cap end.
Sealant:
Part No. 08826–00090. THREE BOND 1281 or equivalent
(b) Using SST and a hammer, tap in the idler arm bracket cap.
SST 09223–46011

ASSEMBLY REMOVAL AND INSTALLATION

Remove and install the parts, as shown.

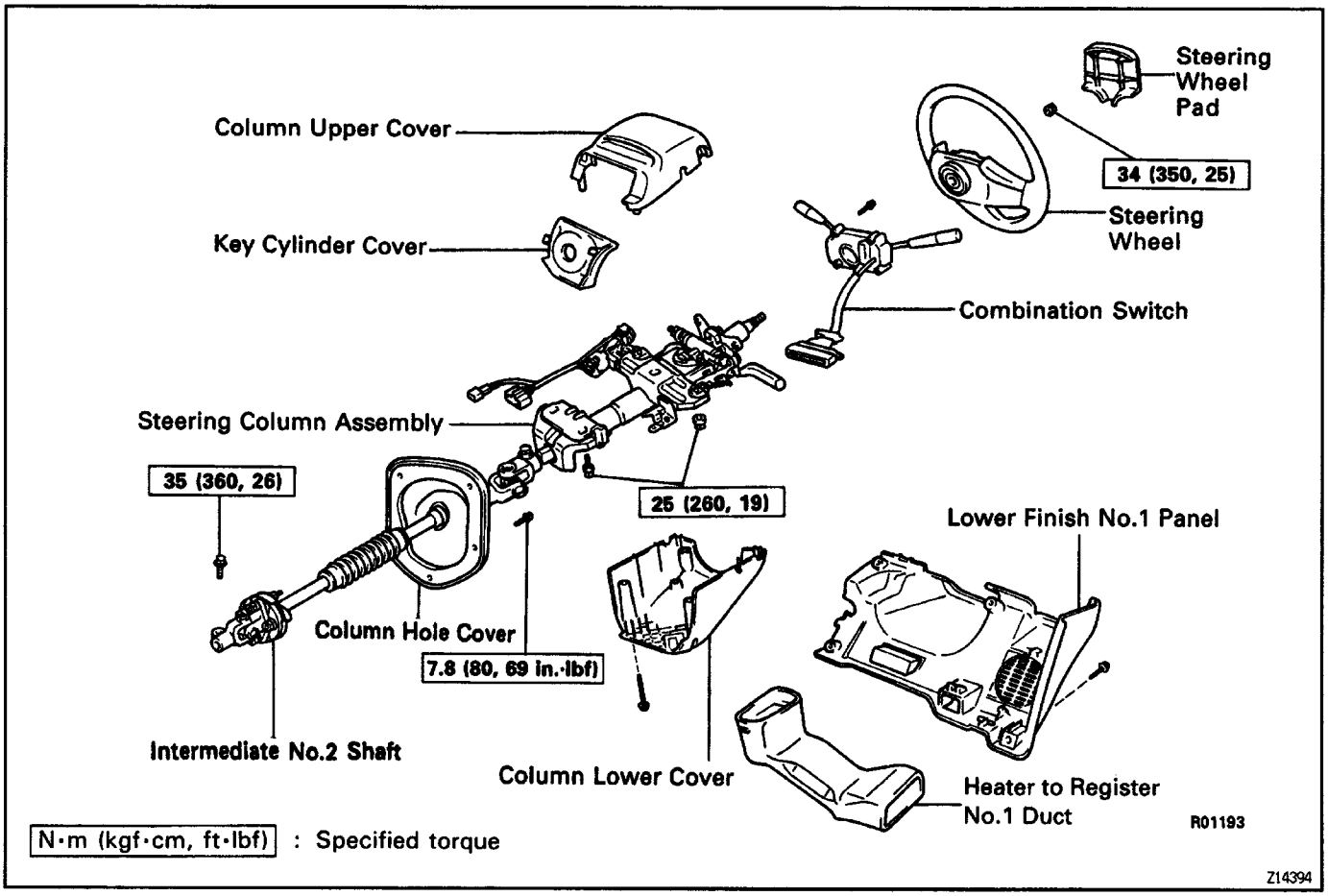

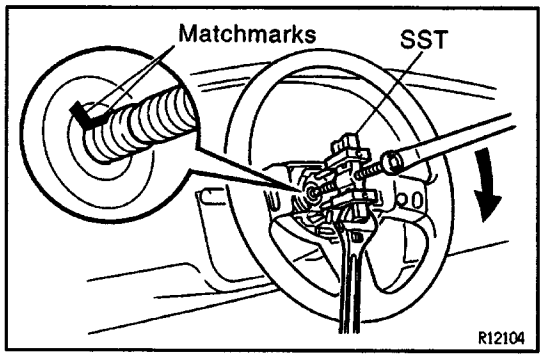

MAIN POINTS OF REMOVAL AND INSTALLATION

1. REMOVE STEERING WHEEL

(a) Remove the steering wheel pad.

(b) Remove the wheel set nut.

(c) Place matchmarks on the steering wheel and main shaft.

(d) Using SST, remove the steering wheel.

SST 09950–50010 (09951–05010, 09952–05010, 09953–05020, 09954–05020)

2. REMOVE 5 COLUMN HOLE COVER SET BOLTS

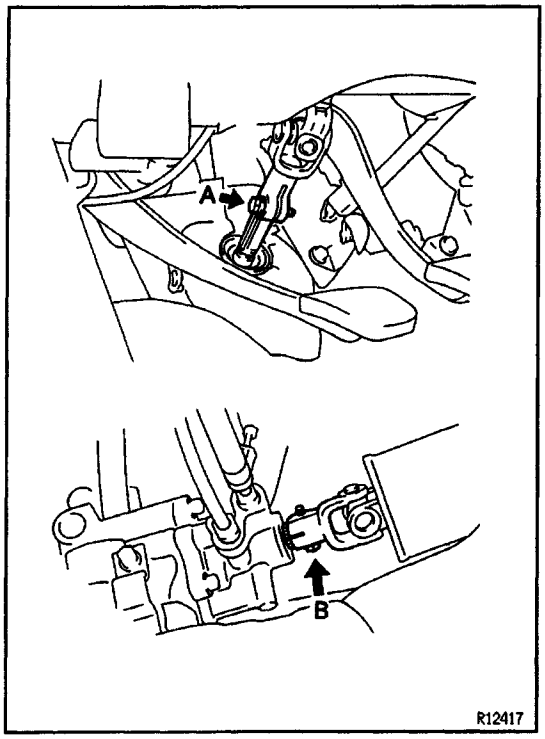

3. DISCONNECT INTERMEDIATE NO.2 SHAFT

(a) Place matchmarks on the control valve shaft and intermediate No.2 shaft.

(b) Loosen the bolt A and remove bolt B.

4. REMOVE STEERING COLUMN ASSEMBLY

(a) Disconnect the connectors.

(b) Remove the 2 column set bolts and nuts.

5. INSTALL STEERING COLUMN ASSEMBLY

(a) Torque the 2 column set bolts and nuts.

Torque: 25 N–m (260 kgf–cm, 19 ft–lbf)

(b) Connect the connectors.

6. CONNECT INTERMEDIATE NO.2 SHAFT

(a) Align the matchmarks on the control valve shaft and intermediate No.2 shaft.

(b) Torque the bolt B.

Torque: 35 N–m (360 kgf–cm, 26 ft–lbf)

(c) Torque the bolt A.

Torque: 35 N–m (360 kgf–cm, 26 ft–lbf)

7. INSTALL STEERING WHEEL

(a) Align the matchmarks on the wheel and main shaft.

(b) Torque the wheel set nut.

Torque: 34 N–m (350 kgf–cm, 25 ft–lbf)

(c) Install steering wheel pad.

8. CHECK STEERING WHEEL CENTER POINT

NON–TILT STEERING COLUMN

COMPONENTS

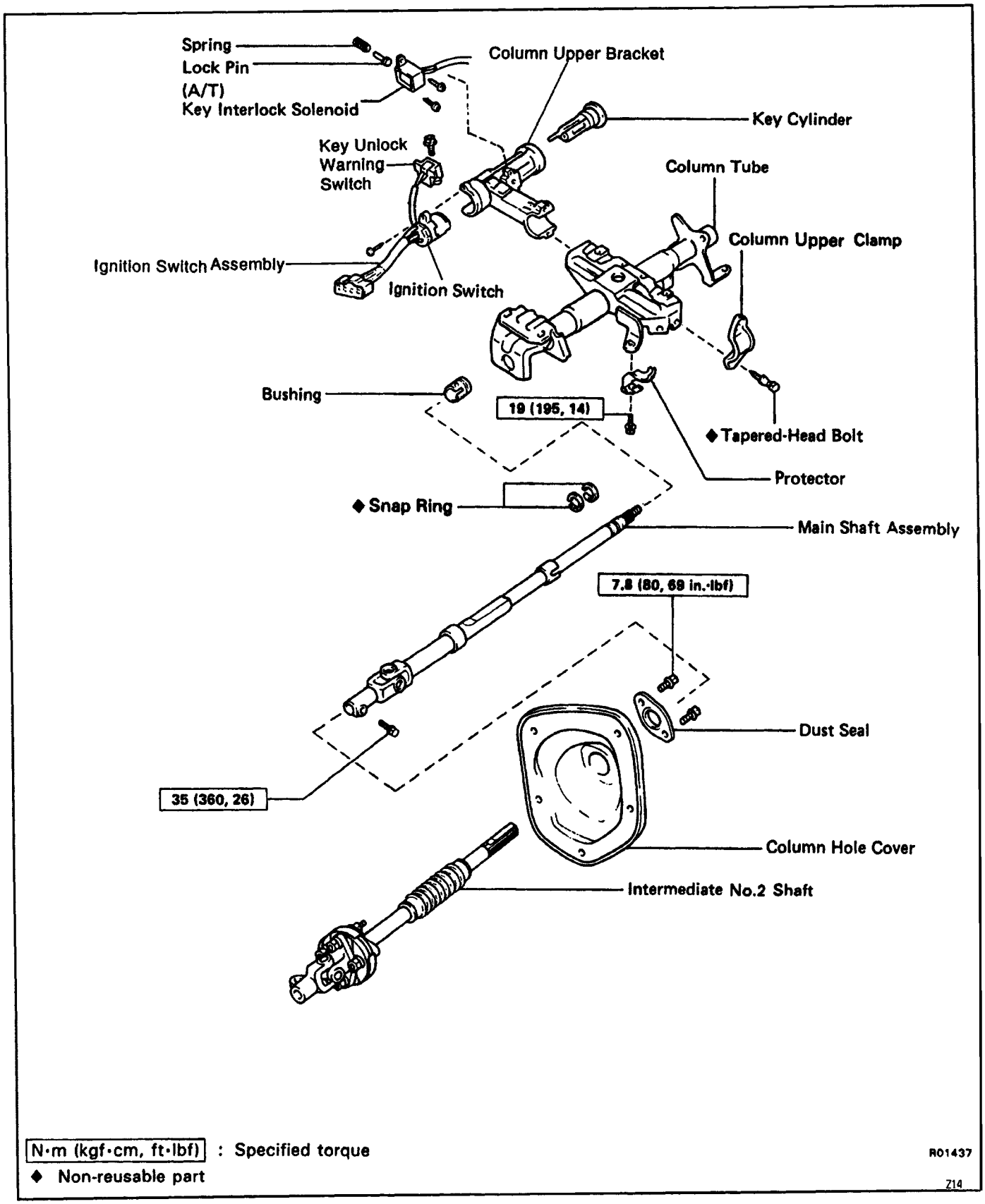

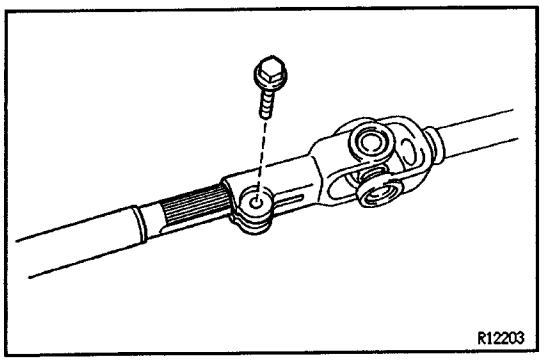

NON–TILT STEERING COLUMN DISASSEMBLY

NOTICE: When using a vise, do not overtighten it.

1. REMOVE INTERMEDIATE NO.2 SHAFT

Remove the bolt.

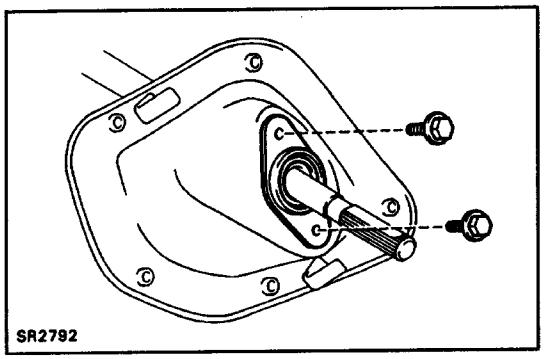

2. REMOVE COLUMN HOLE COVER

(a) Remove the 2 bolts.
(b) Remove the hole cover.

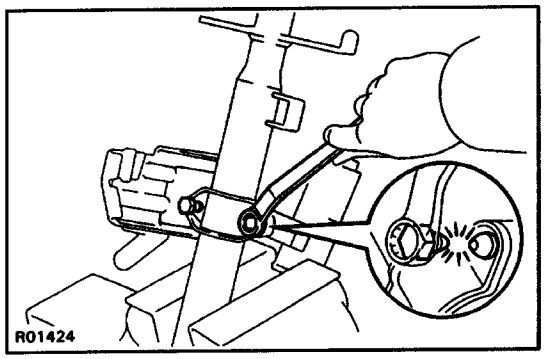

3. REMOVE COLUMN UPPER BRACKET AND COLUMN UPPER CLAMP

(a) Using a centering punch, mark the center of the 2 tapered–head bolts.
(b) Using a 3–4 mm (0.12–0.16 in.) drill, drill into the 2 bolts.
(c) Using a screw extractor, remove the 2 bolts.

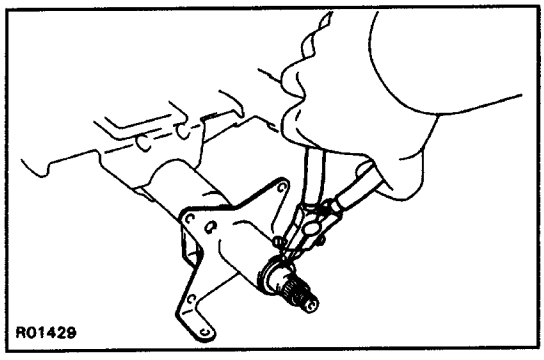

4. REMOVE MAIN SHAFT ASSEMBLY

(a) Using snap ring pliers, remove the snap ring.
(b) Pull out the main shaft from the column tube.

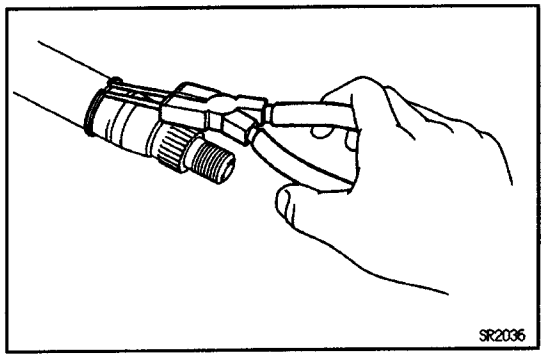

(c) Using snap ring pliers, remove the snap ring.

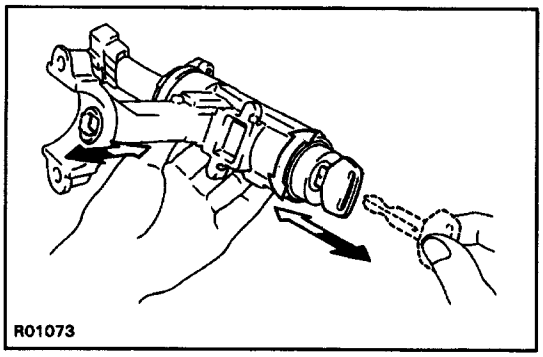

STEERING COLUMN INSPECTION AND REPLACEMENT

1. INSPECT STEERING LOCK OPERATION

Check that the steering lock mechanism operates properly.

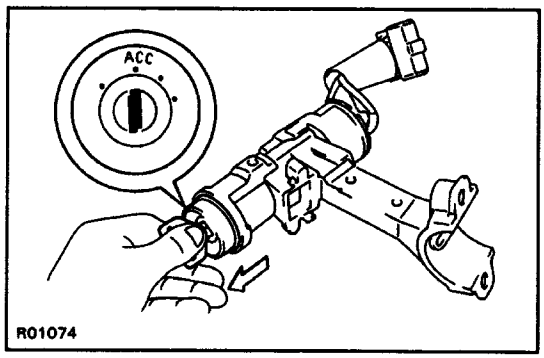

2. IF NECESSARY, REPLACE KEY CYLINDER

(a) Place the ignition key at the ACC position.

(b) Push down the stop pin with a thin rod, and pull out the key cylinder.

(c) Install a new key cylinder.

HINT: Make sure the ignition key is at the ACC position.

3. INSPECT IGNITION SWITCH

(See page BE–12**)**

4. INSPECT KEY UNLOCK WARNING SWITCH

(See page BE–13**)**

5. A/T:

INSPECT KEY INTERLOCK SOLENOID

A340E, F: (See page AT1–77**)**

A340H: (See page AT2–77**)**

6. IF NECESSARY, REPLACE IGNITION SWITCH ASSEMBLY

M /T:

(a) Remove the 3 screws.

(b) Install a new switch assembly with the 3 screws.

A/T:

(a) Remove the 5 screws.

(b) Remove/install the spring and lock pin.

(c) Install a new switch assembly with the 5 screws.

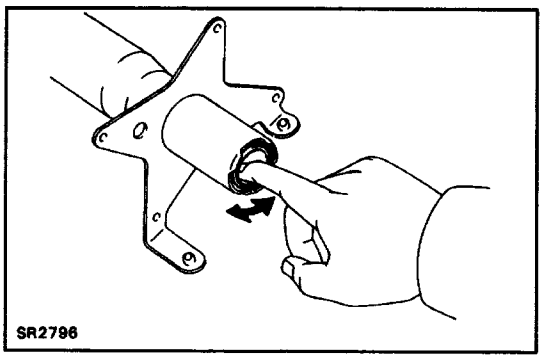

7. INSPECT BEARING

Check the bearing rotation condition and check for abnormal noise.

If the bearing is worn or damaged, replace the column tube.

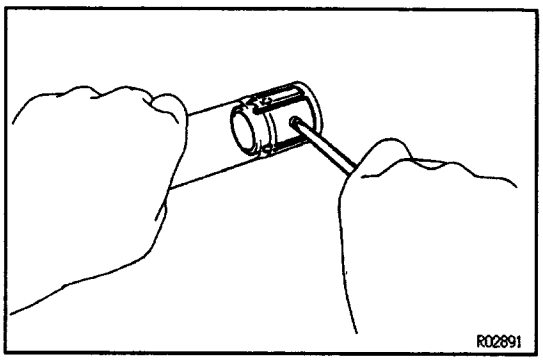

8. IF NECESSARY, REPLACE BUSHING

(a) Using a screwdriver, depress the projections on the bushing to release the bushing, then remove it from the column tube.

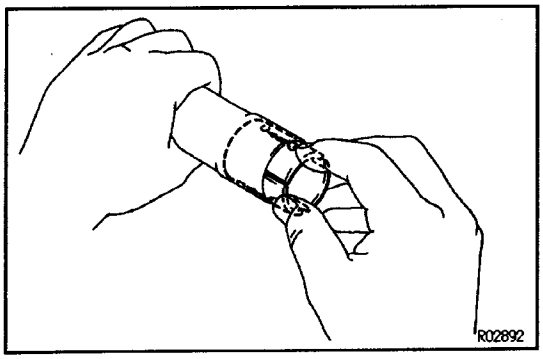

(b) Align the projections on a new bushing with the holes in the column tube. Install the bushing until the projections are firmly engaged in the holes in the tube_

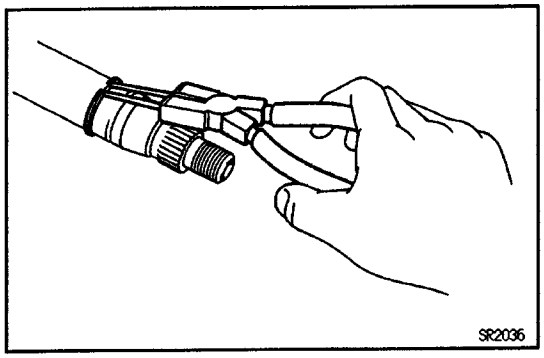

NON–TILT STEERING COLUMN ASSEMBLY

NOTICE: When using a vise, do not overtighten it.

1. INSTALL MAIN SHAFT ASSEMBLY

(a) Using snap ring pliers, install a new snap ring to the lower groove of the main shaft assembly.

(b) Install the shaft assembly in the column tube.

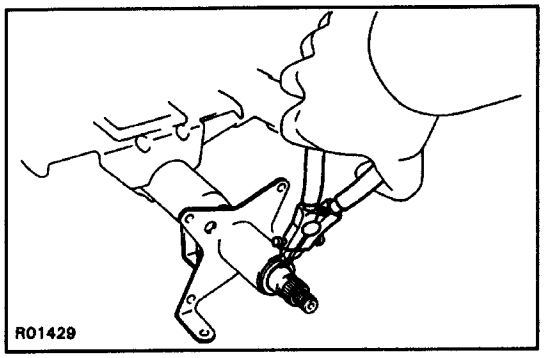

(c) Using snap ring pliers, install a new snap ring to the shaft assembly.

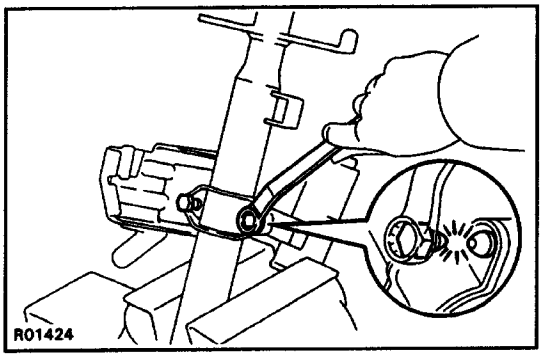

2. INSTALL COLUMN UPPER BRACKET AND COLUMN UPPER CLAMP

Tighten 2 new tapered – head bolts until the bolt heads breaks off.

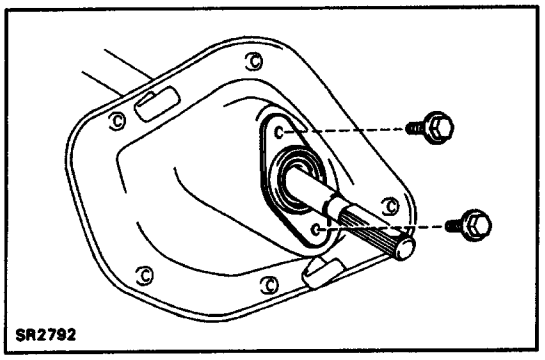

3. INSTALL COLUMN HOLE COVER

(a) Install the column hole cover to the intermediate No.2 shaft.

(b) Torque the 2 bolts.

Torque: 7.8 N–m (80 kgf–cm, 69 in–lbf)

4. INSTALL INTERMEDIATE NO.2 SHAFT

Temporarily tighten the bolt.

STEERING COLUMN

PREPARATION

SST (SPECIAL SERVICE TOOLS)

	**09950–40010** Puller B Set	
	**(09957–04010)** Attachment	Main shaft assembly
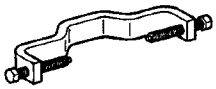	**(09958–04010)** Holder	Main shaft assembly
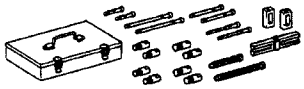	**09950–50010** Puller C Set	
	**(09951–05010)** Hanger 150	Steering wheel
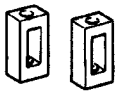	**(09952–05010)** Slide Arm	Steering wheel
	**(09953–05020)** Center Bolt 150	Steering wheel
	**(09954–05020)** Claw No.2	Steering wheel
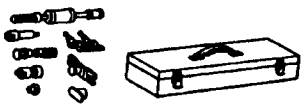	**09910–00015** Puller Set	(Tilt steering column)
	**(09911–00011)** Puller Clamp	Column upper tube
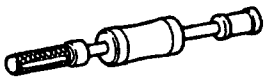	**(09912–00010)** Puller Slide Hammer	Column upper tube

RECOMMENDED TOOLS

	09904–00010 Expander Set.	For removing and installing snap ring
	(09904–00050) No. 4 Claw	

EQUIPMENT

Torque wrench	

TILT STEERING COLUMN

COMPONENTS

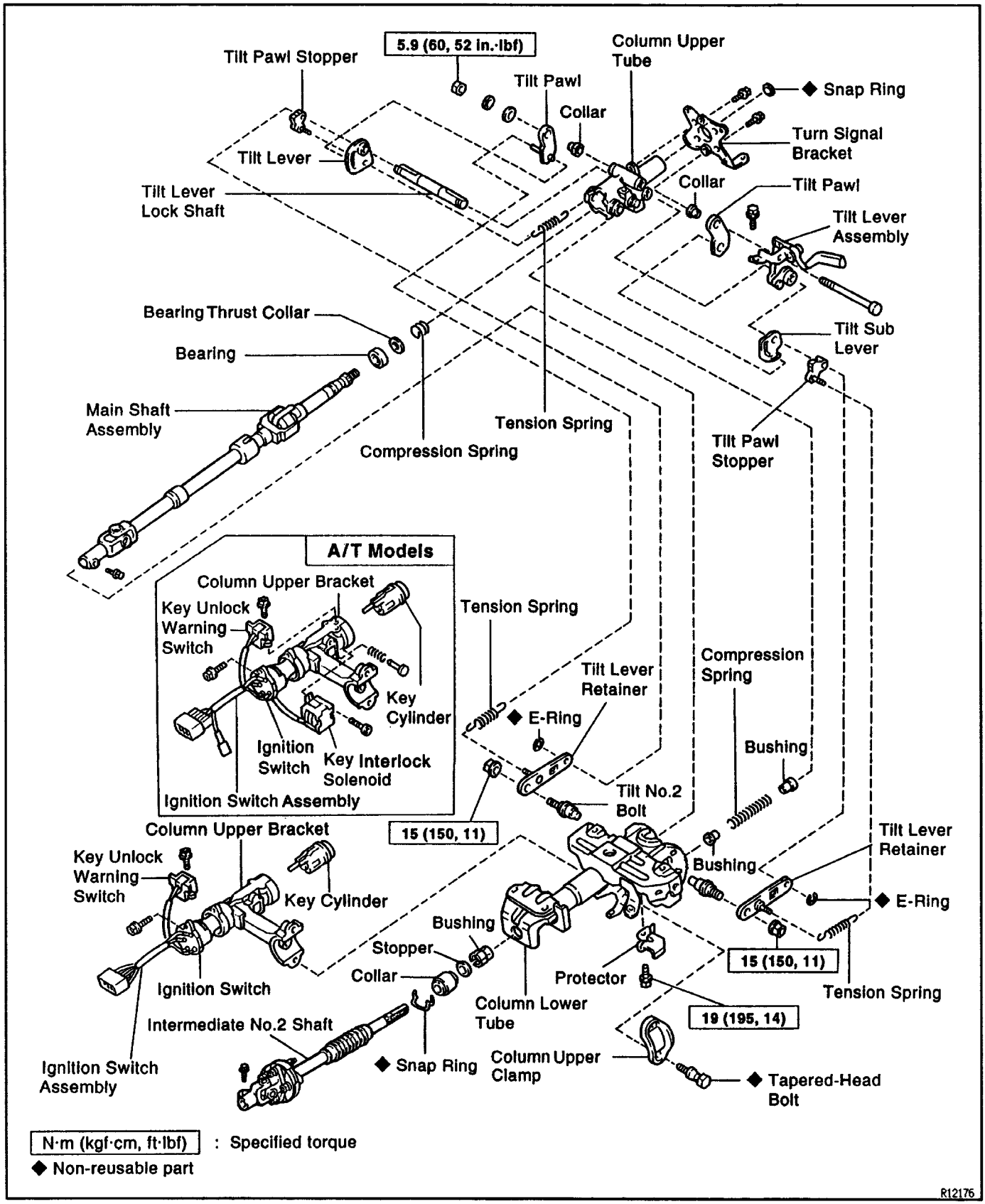

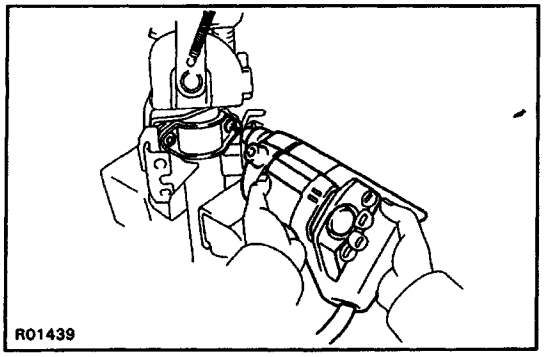

TILT STEERING COLUMN DISASSEMBLY

NOTICE: When using a vise, do not overtighten it.

1. REMOVE INTERMEDIATE NO.2 SHAFT

Remove the bolt.

2. REMOVE COLUMN UPPER BRACKET AND COLUMN UPPER CLAMP

(a) Using a centering punch, mark the center of the 2 tapered–head bolts.

(b) Using a 3–4 mm (0.12–0.16 in.) drill, drill into the 2 bolts.

(c) Using a screw extractor, remove the 2 bolts.

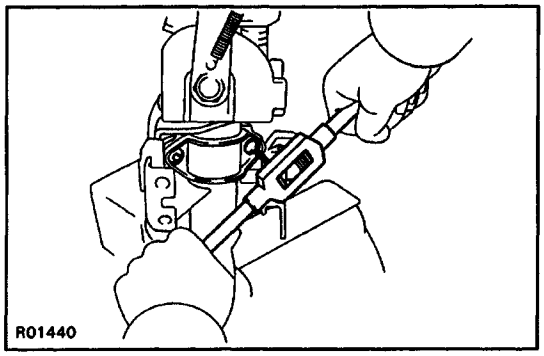

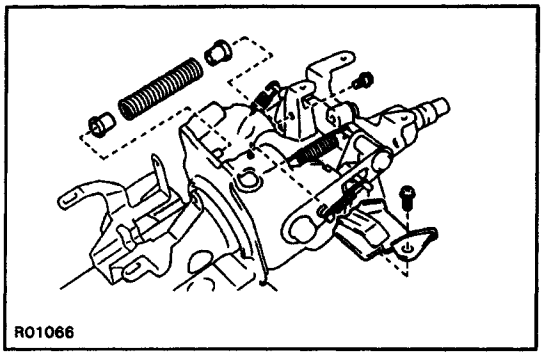

3. REMOVE COMPRESSION SPRING

(a) Remove the bolt.

(b) Remove the 2 bushings from the spring.

4. REMOVE PROTECTOR

Remove the bolt.

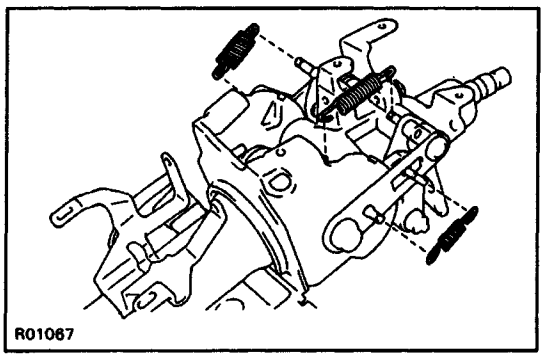

5. REMOVE 3 TENSION SPRINGS

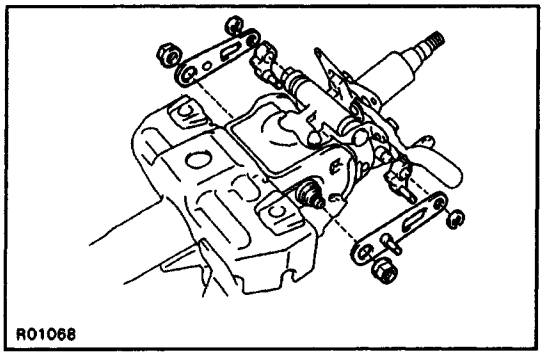

6. REMOVE 2 TILT LEVER RETAINERS AND TILT PAWL STOPPERS

Remove the 2 E–rings and nuts.

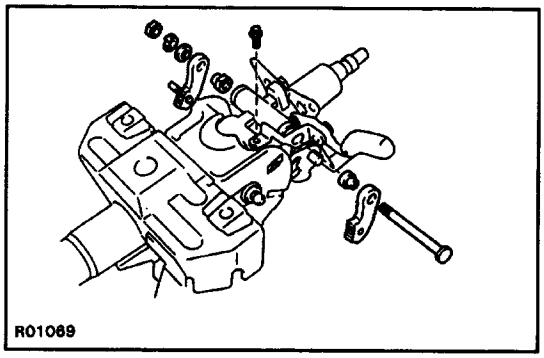

7. REMOVE 2 TILT PAWLS

(a) Remove the nut, 2 washers and bolt.
(b) Remove tilt lever assembly set bolt.
(c) Remove the 2 pawls with the collars.

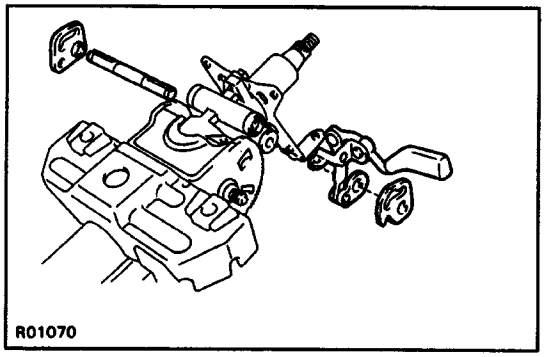

8. REMOVE TILT LEVER ASSEMBLY, TILT LEVER, TILT SUB LEVER AND TILT LEVER LOCK SHAFT

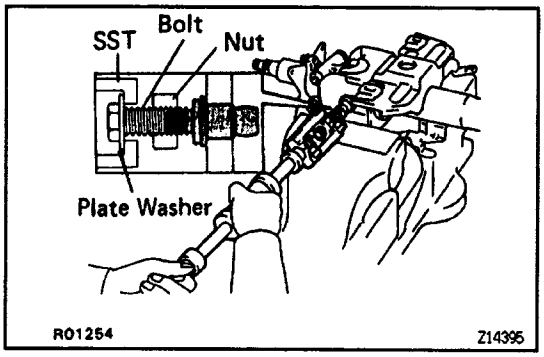

9. REMOVE COLUMN UPPER TUBE

(a) Set SST, the nut (10 mm diameter, 1.25 mm pitch), plate washer (36 mm outer diameter) and bolt (10 mm diameter, 1.25 mm pitch, 50 mm length), as shown.
And then remove the 2 tilt No.2 bolts.

SST 09910–00015 (09911–00011, 09912–00010)

Reference

Nut:	**90170–10004**
Plate washer:	**90201 –10201**
Bolt:	**91111–51050**

(b) Remove the column upper tube with the shaft assembly from the lower tube.

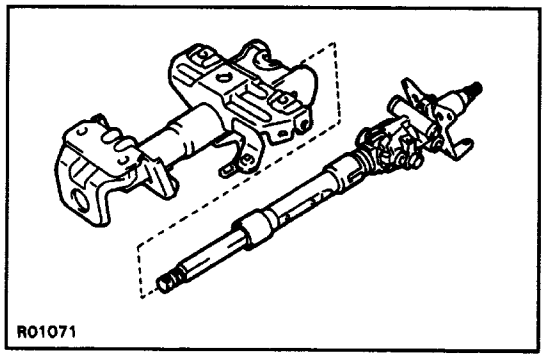

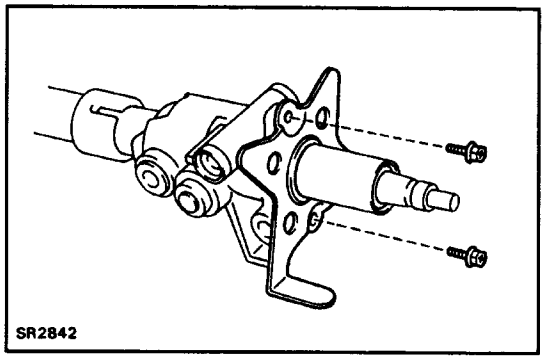

10. REMOVE TURN SIGNAL BRACKET

Remove the 2 bolts.

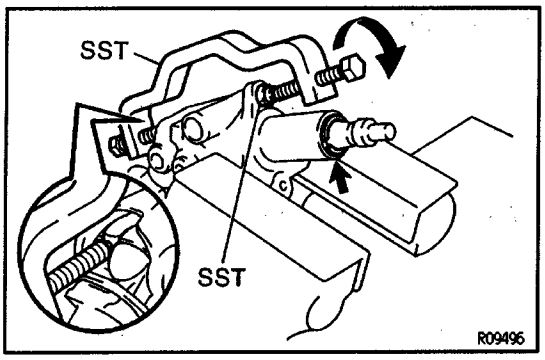

11. REMOVE MAIN SHAFT ASSEMBLY

(a) Using SST, compress the compression spring.
SST 09950–40010 (09957–04010. 09958–04010)
NOTICE: Do not bend the universal joint of the main shaft assembly more than 20°.

(b) Using snap ring pliers, remove the snap ring.

(c) Remove the shaft assembly from the column upper tube.

(d) Remove the compression spring, bearing thrust collar and bearing from the shaft assembly.

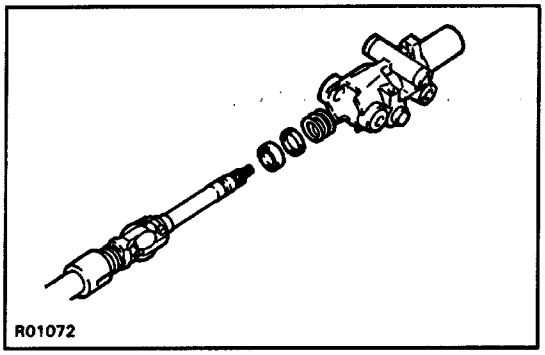

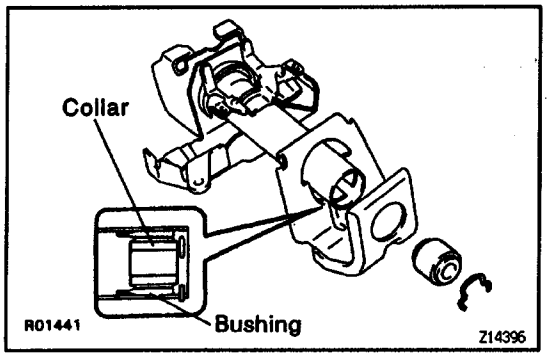

12. REMOVE COLLAR

(a) Remove the snap ring from the column lower tube.
(b). Remove the collar and stopper.

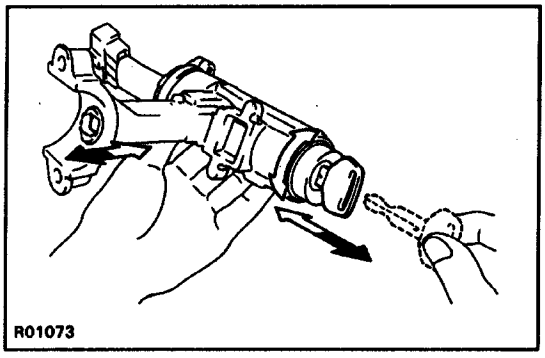

TILT STEERING COLUMN INSPECTION AND, REPLACEMENT

1. INSPECT STEERING LOCK OPERATION

Check that the steering lock mechanism operates properly.

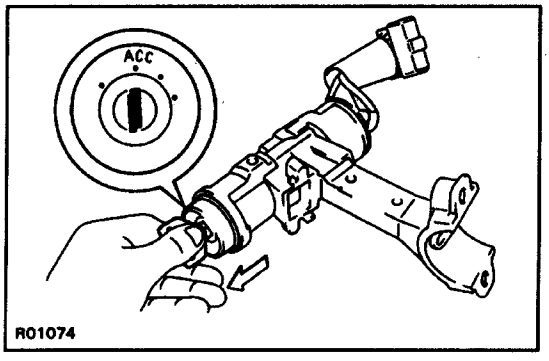

2. IF NECESSARY, REPLACE KEY CYLINDER

(a) Place the ignition key at the ACC position.
(b) Push down the stop pin with a thin rod, and pull out the key cylinder.
(c) Install the new key cylinder.
HINT: Make sure the ignition key is at the ACC position.

3. INSPECT IGNITION SWITCH

(See page BE–12)

4. INSPECT KEY UNLOCK WARNING SWITCH

(See page BE–13)

5. A/T:

INSPECT KEY INTERLOCK SOLENOID

A340E,F: (See page AT1–77)

A340H: (See page AT2–77)

6. IF NECESSARY, REPLACE IGNITION SWITCH ASSEMBLY

M /T:

(a) Remove the 3 screws.

(b) Install a new switch assembly with the 3 screws.

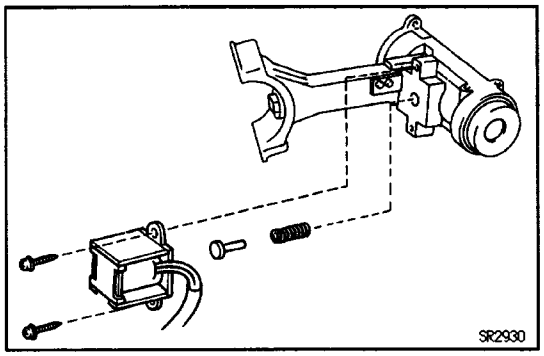

A/T:

(a) Remove the 5 screws.

(b) Remove/install the spring and lock pin.

(c) Install a new switch assembly with the 5 screws.

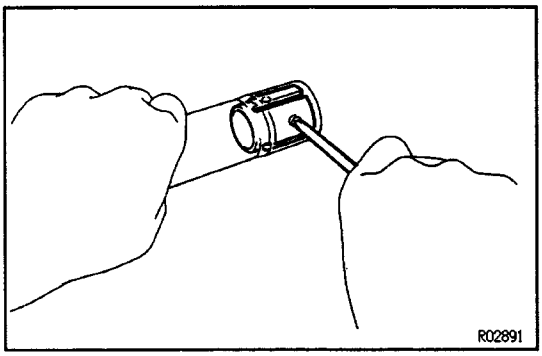

7. IF NECESSARY, REPLACE BUSHING

(a) Using a screwdriver, depress the projections on the bushing to release the bushing, then remove it from the column lower tube.

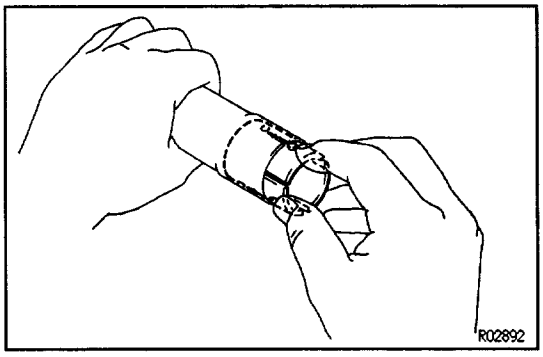

(b) Align the projections on a new bushing with the holes in the column lower tube. Install the bushing until the projections are firmly engaged in the holes in the tube.

TILT STEERING COLUMN ASSEMBLY

NOTICE: When using a visa, do not overtighten it.

1. APPLY MOLYBDENUM DISULPHIDE LITHIUM BASE GREASE ON FOLLOWING PARTS:

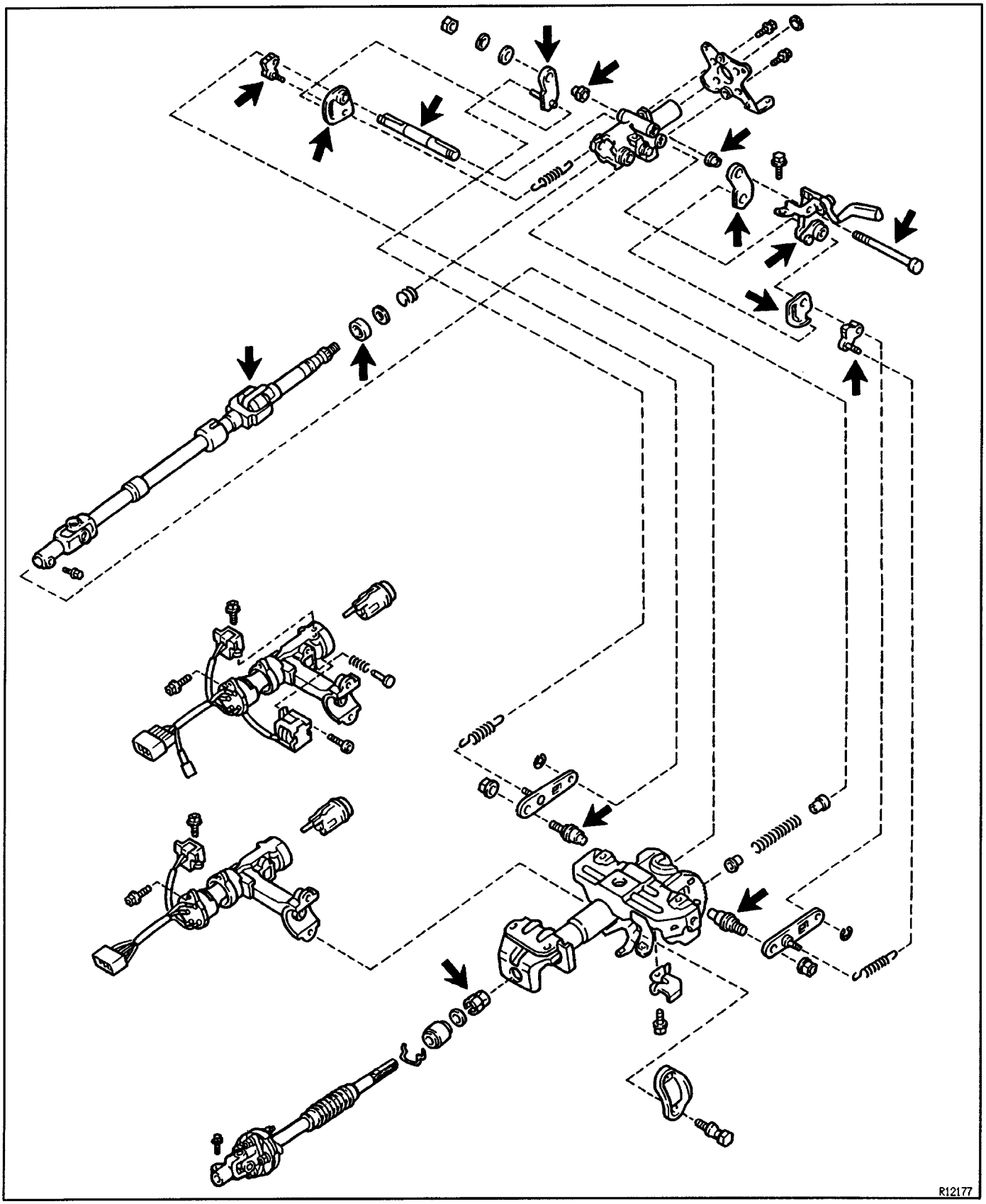

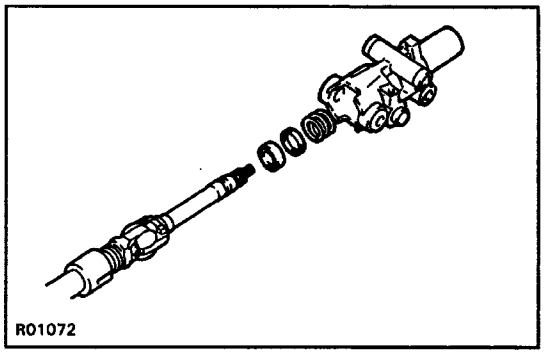

2. INSTALL MAIN SHAFT ASSEMBLY

(a) Install the bearing, bearing thrust collar and compression spring.

(b) Install the shaft assembly to the column upper tube.

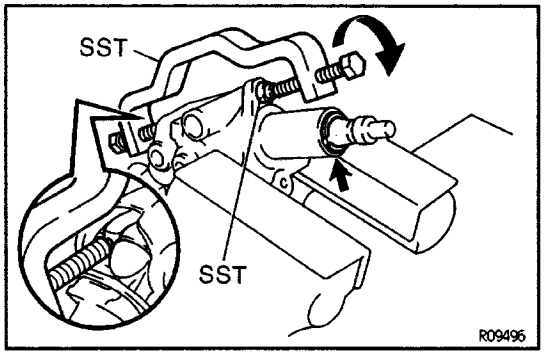

(c) Using SST compress the compression spring.
SST 09950 – 40010 (09957 – 04010, 09958 – 04010)
NOTICE: Do not bend the universal joint of the main shaft more than 20°.

(d) Using snap ring pliers, install a new ring.

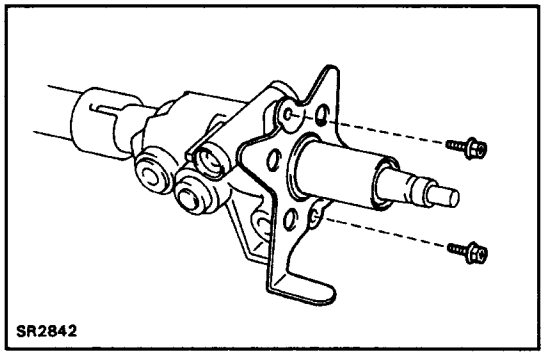

3. INSTALL TURN SIGNAL BRACKET

Install the 2 bolts.
Torque: 7.8 N–m (80 kgf–cm, 69 in.–lbf)

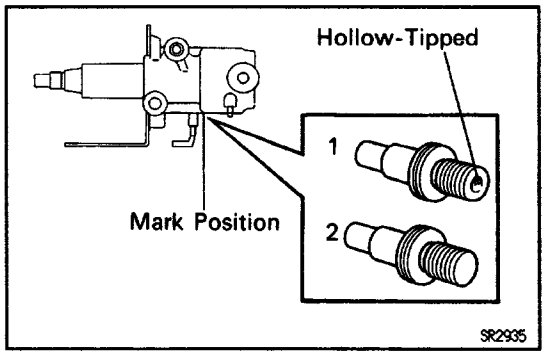

4. SELECT TILT NO.2 BOLT

Select the bolt with the plain thread end when the column upper tube mark is 2, and the bolt with the hollow–tipped thread end when the mark is 1.

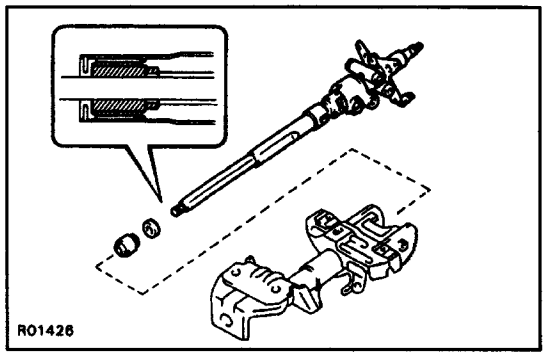

5. INSTALL MAIN SHAFT ASSEMBLY WITH COLUMN UPPER TUBE

(a) Install the stopper and collar to the shaft assembly, as shown.

(b) Install the shaft assembly with the upper tube to the column lower tube.

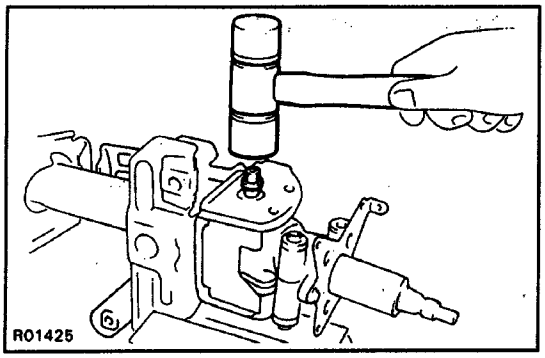

(c) Using a plastic hammer, drive in the 2 tilt No.2 bolts.

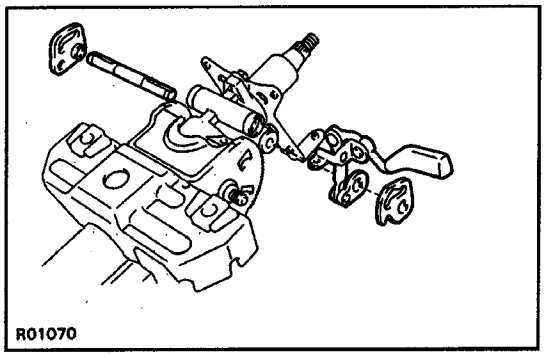

6. INSTALL TILT LEVER LOCK SHAFT, TILT SUB LEVER, TILT LEVER, AND TILT LEVER ASSEMBLY

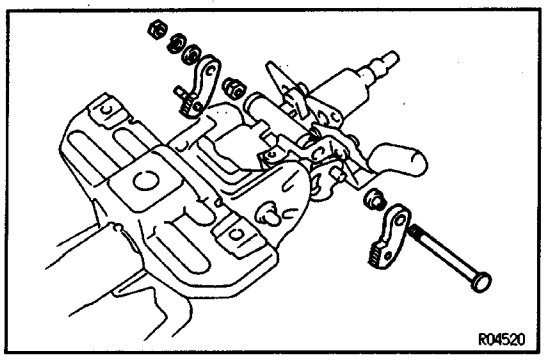

7. INSTALL TILT PAWLS

(a) Insert the collar to the tilt pawl.

(b) Temporarily install the 2 tilt pawls, bolt, 2 washers and nut.

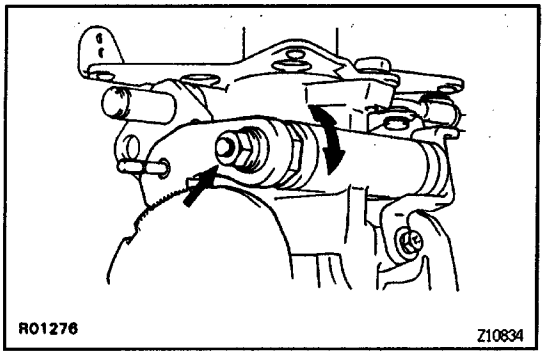

8. ENGAGE AND ADJUST 2 TILT PAWLS

(a) Engage the tilt sub lever side pawl to the center of the ratchet.

(b) While turning the tilt lever side collar, engage the tilt sub lever side pawl to the ratchet completely.

(c) Do not turn the collars after the tilt sub lever side pawl is engaged.

(d) Torque the nut.

Torque: 5.9 N–m (60 kgf–cm, 52 in.–lbf)

(e) Check that the pawls rotate smoothly.

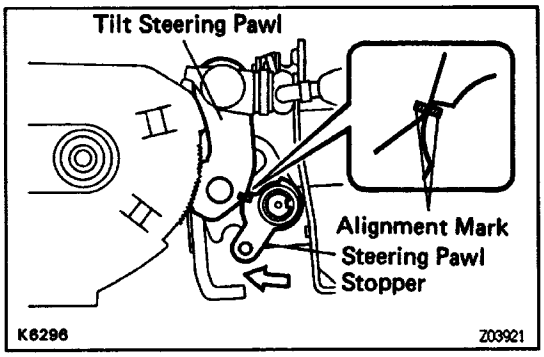

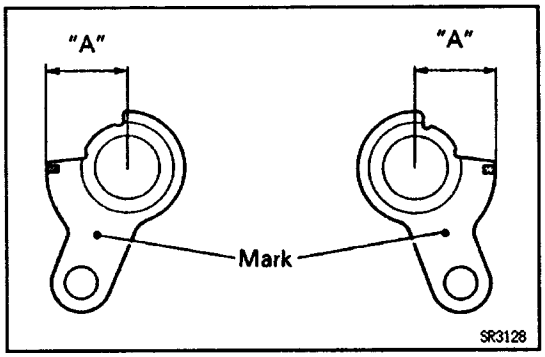

9. SELECT 2 TILT PAWL STOPPERS

(a) With the tilt pawl and ratchet engaged, install the stopper.

(b) Check that the alignment marks on the stopper and pawl align when the stopper is lightly rotated to the pawl side.

(c) If the alignment marks do not align, select pawl stopper according to the following table.

Tilt lever side	Tilt sub lever side	Dimension 'A' mm (in.)
1	A	12.65 – 12.75 (0.4980 – 0.5020)
2	B	12.55 – 12.65 (0.4941 – 0.4980)
3	C	12.45 – 12.55 (0.4902 – 0.4941)
4	D	12.35 – 12.45 (0.4862 – 0.4902)
5	E	12.25 – 12.35 (0.4823 – 0.4862)

(d) After selecting the stoppers, check that on both sides the pawl and ratchet are fully engaged.

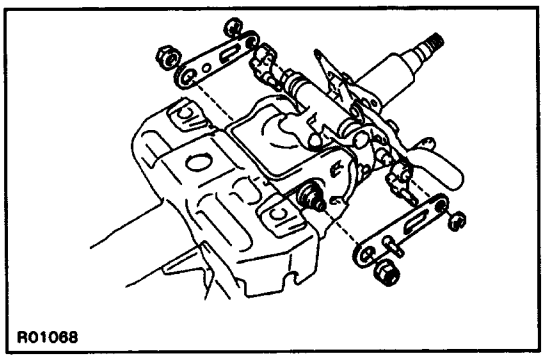

10. INSTALL 2 PAWL STOPPERS AND TILT LEVER RETAINERS

(a) Torque the 2 nuts.

Torque: 15 N–m (150 kgf–cm, 11 ft–lbf)

(b) Install 2 new E–rings.

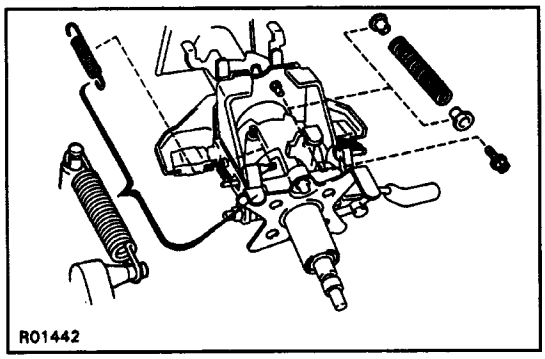

11. INSTALL COMPRESSION SPRING AND TENSION SPRING

(a) Install the 2 bushings to the compression spring.

(b) Torque the bolt.

Torque: 7.8 N–m (80 kgf–cm, 69 in.–lbf)

(c) Install the tension spring.

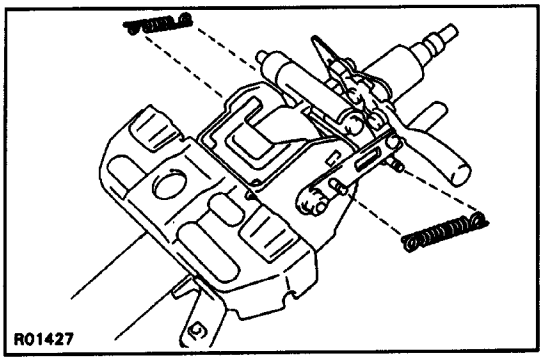

12. INSTALL 2 TENSION SPRINGS

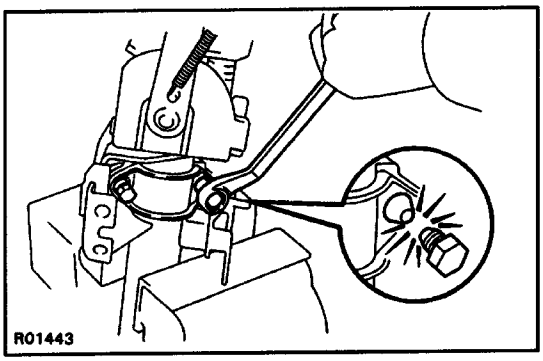

13. INSTALL COLUMN UPPER BRACKET AND COLUMN UPPER CLAMP

(a) Install the upper column bracket with the 2 new tapered–head bolts.

(b) Tighten the bolts until the bolt heads break off.

14. CHECK TILT STEERING OPERATION

(a) Check that there is no axial play at the end of the main shaft.

(b) With the main shaft in the neutral position, pull the tilt lever and check that the main shaft rises to the uppermost position.

(c) Lower the main shaft, and check that it locks in the lowermost position.

GENERAL DESCRIPTION

Care must be taken to replace parts properly because they could affect the performance of the steering
system and result in a driving hazard.

TROUBLESHOOTING

Use the table below to help you find the cause of the problem. The numbers indicate the priority of the likely cause of the problem. Check each part in order. If necessary, replace these parts.

See page / Parts Name / Trouble	SA–3	SA–4	SR–29	SR–29	–	SA–120	–	–	SR–55	SA–12
	res (Improperly inflated)	Front wheel alignment (Incorrect)	Fluid level (Low)	Drive belt (Loose)	Steering system joints (Worn)	Suspension arm ball joints (Worn)	Steering column (Binding)	Sliding yoke (Worn)	Power Steering Gear	Front wheel bearing (Worn)
Hard steering	1	4	2	3	5	6	7		8	
Poor return	1	2					3		4	
Excessive play					1	2		3	5	4
Abnormal noise			1		2				3	

CLUTCH START SWITCH

M/T only:

(See clutch pedal in clutch)

PARK NEUTRAL POSITION (PNP) SWITCH

A/T only:

(See Automatic Transmission)

SERVICE SPECIFICATIONS

SERVICE DATA

Starter	**Rated voltage and output power**		**12V 1.2 kW, 1.4 kW, 1.6 kW**
	No−load characteristics	**Current**	**90 A or less at 11.5 V**
	1.0 kW type	**rpm**	**3,000 rpm or more**
	1.4 kW, 1.6 kW type	**rpm**	**3,500 rpm or more**
	Brush length		
	1.0 kW type	**STD**	**13.5 mm (0.531 in.)**
		Minimum	**8.5 mm (0.335 in.)**
	1.4 kW, 1.6 kW type	**STD**	**15.5 mm (0.610 in.)**
		Minimum	**8.5 mm (0.335 in.)**
	Commutator		
	Outer diameter	**STD**	**30 mm (1.18 in.)**
		Minimum	**29 mm (1.14 in.)**
	Undercut depth	**STD**	**0.6 mm (0.024 in.)**
		Minimum	**0.2 mm (0.008 in.)**
	Circuit runout	**Maximum**	**0.05 mm (0.002 in.)**
	Spring installed load	**STD**	**18 − 24 N (1.79 − 2.41 kgf, 3.9 − 5.3 lbf)**
		Minimum	**12 N (1.2 kgf, 2.6 lbf)**

TORQUE SPECIFICATIONS

Part tightened	N·m	kgf·cm	ft·lbf
Starter Housing x Magnetic switch (22R–E, 1.4 kW)	**5.9**	**60**	**52 in.·lbf**
Starter Housing x Magnetic switch (Others)	**9.3**	**95**	**82 in.·lbf**
Magnetic switch terminal nut	**7.9**	**81**	**70**
Starter Housing x End Frame (22R–E, 1.4 kW)	**5.9**	**60**	**52 in.·lbf**
Starter Housing x End Frame (Others)	**9.3**	**95**	**82 in.·lbf**
Starter mounting bolt	**39**	**400**	**29**

STARTING SYSTEM

DESCRIPTION

The starter is a reduction type with a small, high–speed motor used to drive the pinion gear.

SYSTEM CIRCUIT

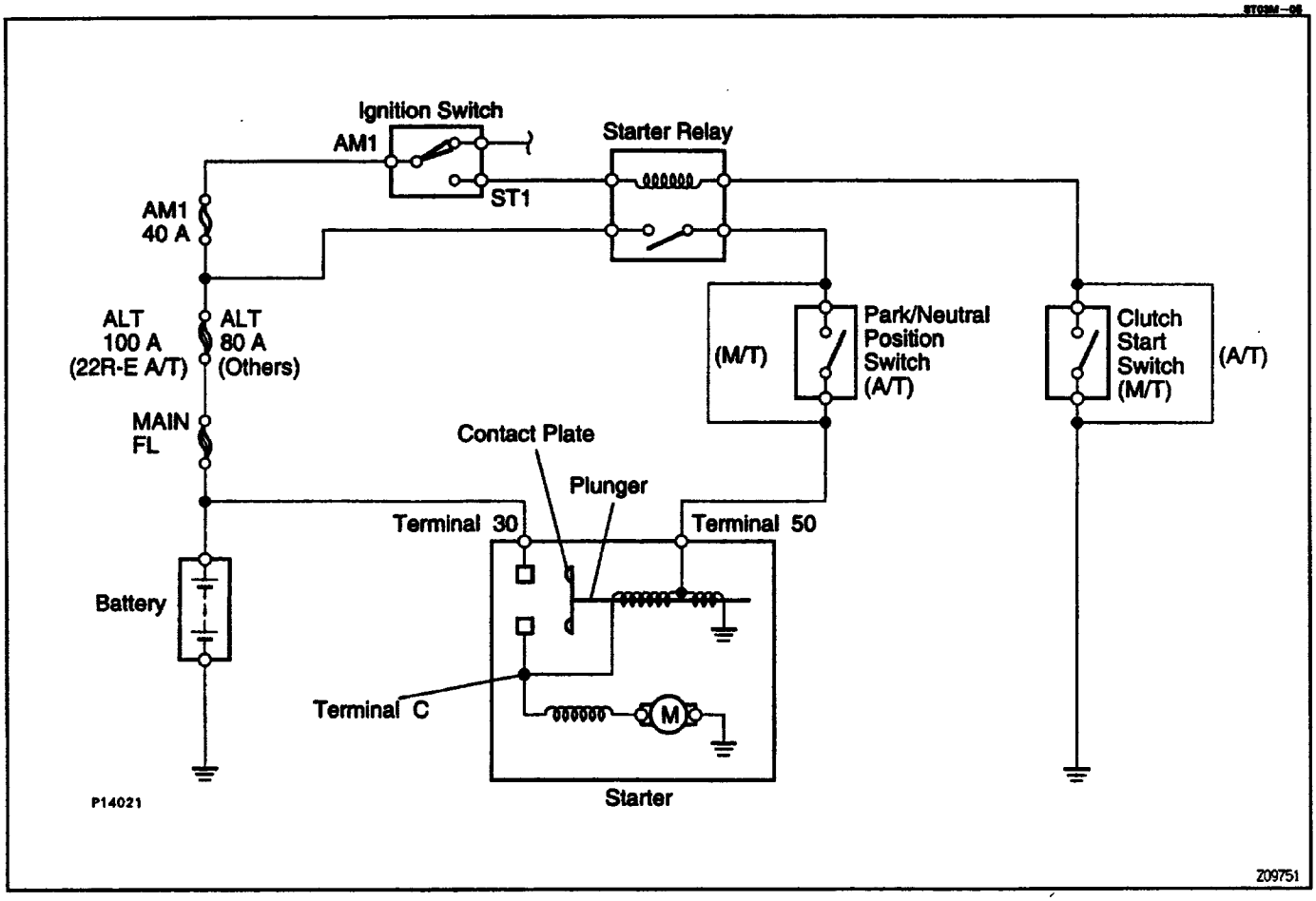

OPERATION

When the ignition switch is turned to START position, current flows from terminal 50 to the coil of the solenoid and the plunger is pulled by the magnetic force of the coil. When the plunger is pulled to the left as shown above, the contact plate of the plunger allows current from the battery to flow directly from terminal 30 to the motor, and the starter rotates.

When the engine is running and the ignition switch is returned to ON, the magnetic force of the coil disappears and the contact plate of the plunger is returned to its original position by the return spring. Battery voltage no longer flows from terminal 30, so the motor stops.

DESCRIPTION

The starter is a reduction type with a small, high–speed motor used to drive the pinion gear.

SYSTEM CIRCUIT

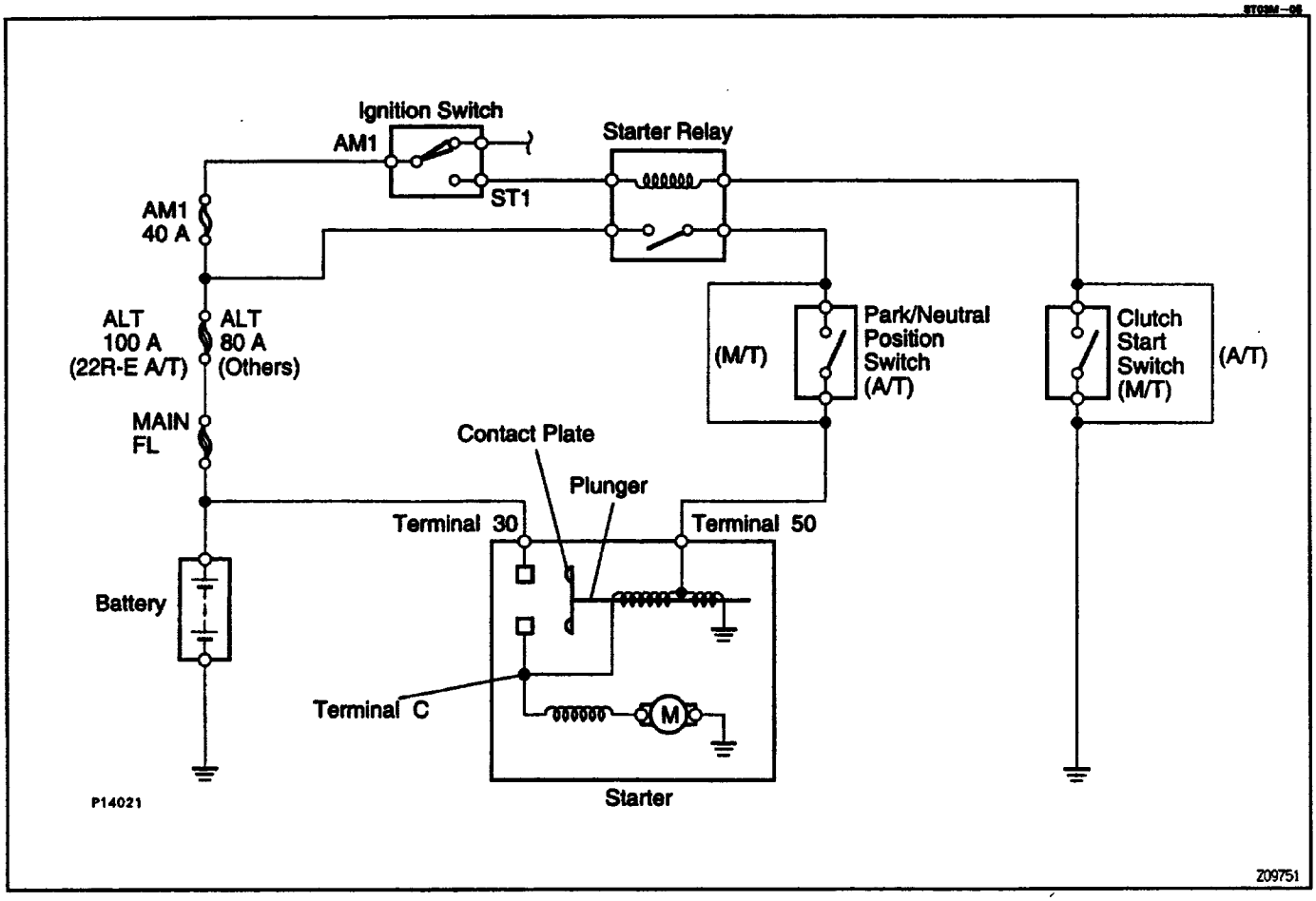

OPERATION

When the ignition switch is turned to START position, current flows from terminal 50 to the coil of the solenoid and the plunger is pulled by the magnetic force of the coil. When the plunger is pulled to the left as shown above, the contact plate of the plunger allows current from the battery to flow directly from terminal 30 to the motor, and the starter rotates.

When the engine is running and the ignition switch is returned to ON, the magnetic force of the coil disappears and the contact plate of the plunger is returned to its original position by the return spring. Battery voltage no longer flows from terminal 30, so the motor stops.

CLUTCH START SWITCH

M/T only:

(See clutch pedal in clutch)

PARK NEUTRAL POSITION (PNP) SWITCH

A/T only:

(See Automatic Transmission)

SERVICE SPECIFICATIONS

SERVICE DATA

Starter	Rated voltage and output power		12V 1.2 kW, 1.4 kW, 1.6 kW
	No−load characteristics	Current	90 A or less at 11.5 V
	1.0 kW type	rpm	3,000 rpm or more
	1.4 kW, 1.6 kW type	rpm	3,500 rpm or more
	Brush length		
	1.0 kW type	STD	13.5 mm (0.531 in.)
		Minimum	8.5 mm (0.335 in.)
	1.4 kW, 1.6 kW type	STD	15.5 mm (0.610 in.)
		Minimum	8.5 mm (0.335 in.)
	Commutator		
	Outer diameter	STD	30 mm (1.18 in.)
		Minimum	29 mm (1.14 in.)
	Undercut depth	STD	0.6 mm (0.024 in.)
		Minimum	0.2 mm (0.008 in.)
	Circuit runout	Maximum	0.05 mm (0.002 in.)
	Spring installed load	STD	18 − 24 N (1.79 − 2.41 kgf, 3.9 − 5.3 lbf)
		Minimum	12 N (1.2 kgf, 2.6 lbf)

TORQUE SPECIFICATIONS

Part tightened	N·m	kgf·cm	ft·lbf
Starter Housing x Magnetic switch (22R–E, 1.4 kW)	5.9	60	52 in.·lbf
Starter Housing x Magnetic switch (Others)	9.3	95	82 in.·lbf
Magnetic switch terminal nut	7.9	81	70
Starter Housing x End Frame (22R–E, 1.4 kW)	5.9	60	52 in.·lbf
Starter Housing x End Frame (Others)	9.3	95	82 in.·lbf
Starter mounting bolt	39	400	29

PREPARATION

SST (SPECIAL SERVICE TOOLS)

	09285–76010	Injection Pump Camshaft Bearing Cone Replacet	Armature front bearing for 1.0 kW
	09286–46011	Injection Pump Spline Shaft PuRer	Armature bearing
	09201–41020	Valve Stem Oil Seal Replacer	Armature front bearing for 1.4 kW and 1.8 kW

RECOMMENDED TOOLS

	09082–00050	TOYOTA Electrical Tester set	

EQUIPMENT

Dial indicator	Commutstor
Magnetic finger	Steel ball
Pull scale	Brush spring
Sandpaper	Commutator
Torque wrench	
V– block	Commutator
Vernier calipers	Commutator. Brush

CLUTCH START SWITCH

M/T only:

(See clutch pedal in clutch)

PARK NEUTRAL POSITION (PNP) SWITCH

A/T only:

(See Automatic Transmission)

SERVICE SPECIFICATIONS

SERVICE DATA

Starter	Rated voltage and output power		12V 1.2 kW, 1.4 kW, 1.6 kW
	No−load characteristics	Current	90 A or less at 11.5 V
	1.0 kW type	rpm	3,000 rpm or more
	1.4 kW, 1.6 kW type	rpm	3,500 rpm or more
	Brush length		
	1.0 kW type	STD	13.5 mm (0.531 in.)
		Minimum	8.5 mm (0.335 in.)
	1.4 kW, 1.6 kW type	STD	15.5 mm (0.610 in.)
		Minimum	8.5 mm (0.335 in.)
	Commutator		
	Outer diameter	STD	30 mm (1.18 in.)
		Minimum	29 mm (1.14 in.)
	Undercut depth	STD	0.6 mm (0.024 in.)
		Minimum	0.2 mm (0.008 in.)
	Circuit runout	Maximum	0.05 mm (0.002 in.)
	Spring installed load	STD	18 − 24 N (1.79 − 2.41 kgf, 3.9 − 5.3 lbf)
		Minimum	12 N (1.2 kgf, 2.6 lbf)

TORQUE SPECIFICATIONS

Part tightened	N·m	kgf·cm	ft·lbf
Starter Housing x Magnetic switch (22R–E, 1.4 kW)	5.9	60	52 in.·lbf
Starter Housing x Magnetic switch (Others)	9.3	95	82 in.·lbf
Magnetic switch terminal nut	7.9	81	70
Starter Housing x End Frame (22R–E, 1.4 kW)	5.9	60	52 in.·lbf
Starter Housing x End Frame (Others)	9.3	95	82 in.·lbf
Starter mounting bolt	39	400	29

STARTER

ON–VEHCLE INSPECTION

NOTICE: Before changing the starter, check the following items again.

- **Connector connection**
- **Accessory installation (for example: Theft deterrent system)**

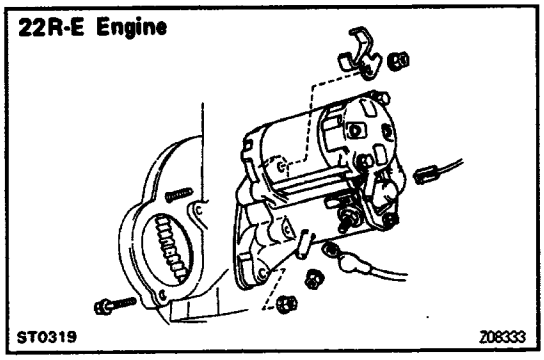

STARTER REMOVAL

1. DISCONNECT WIRES FROM STARTER

(a) Remove the nut and disconnect the battery cable from the magnetic switch on the starter motor.

(b) Disconnect the other wire from terminal 50.

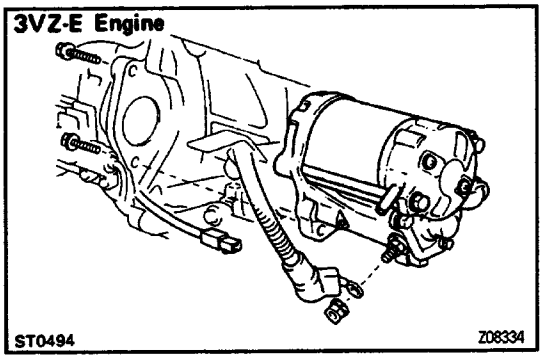

2. REMOVE STARTER MOTOR

22 R – E Engine:

Remove the nut and bolts, and remove the starter motor from flywheel bellhousing.

3VZ – E Engine:

Remove the 2 mounting bolts, and remove the starter motor from flywheel bellhousing.

COMPONENTS FOR DISASSEMBLY AND ASSEMBLY

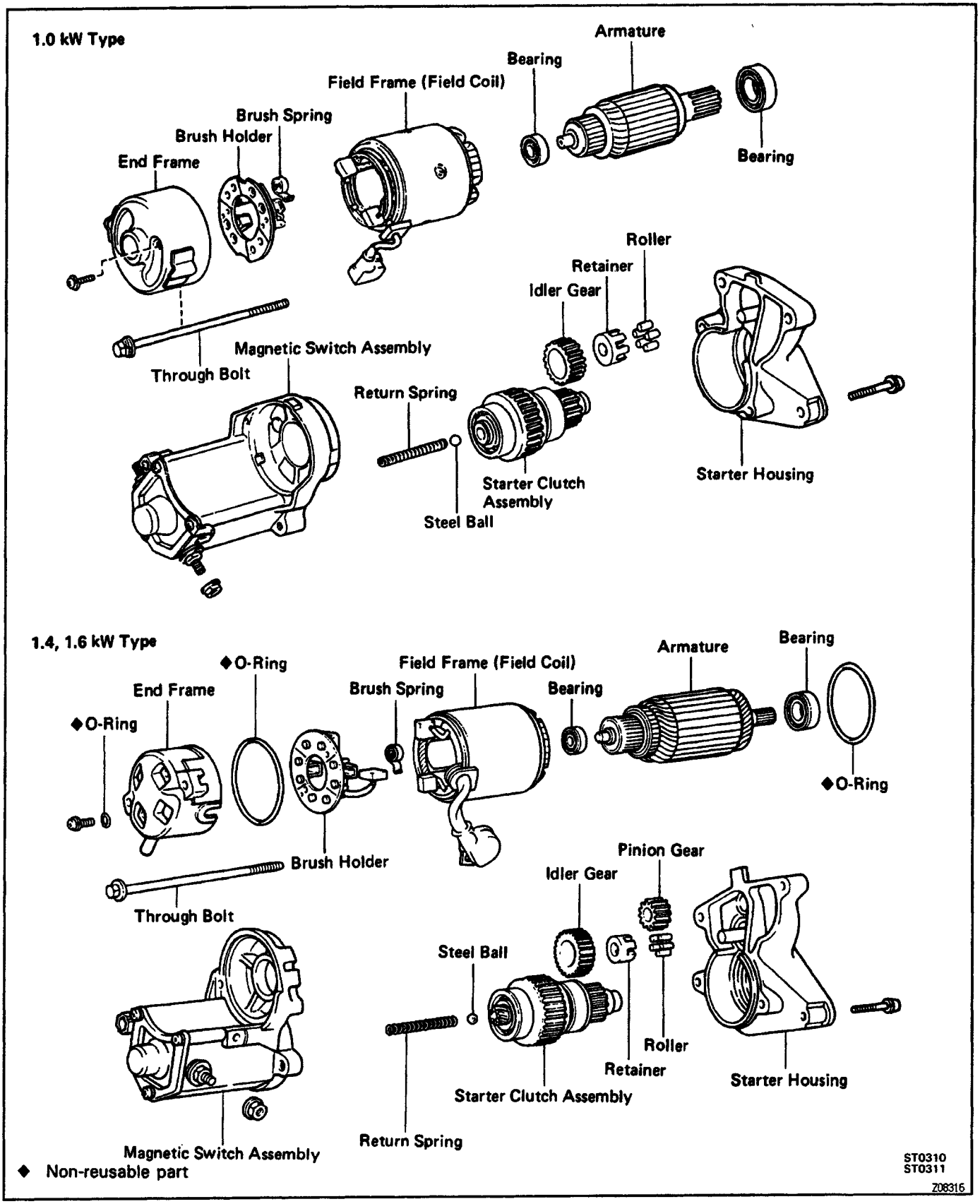

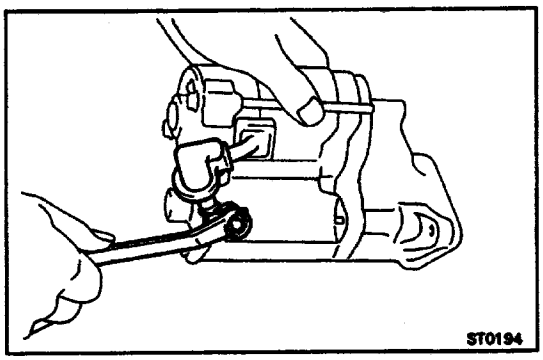

STARTER DISASSEMBLY

(See Components for Disassembly and Assembly)

1. REMOVE FIELD FRAME WITH ARMATURE FROM MAGNETIC SWITCH ASSEMBLY

(a) Remove the nut and disconnect the lead wire from the magnetic switch terminal.

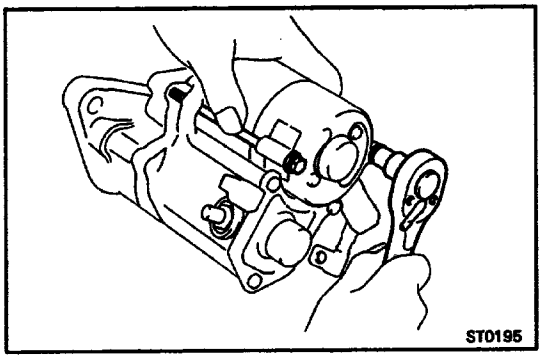

(b) Remove the 2 through bolts. Pull out the field frame with the armature from the magnetic switch assembly.

(c) 1.4 kW, 1.6 kW:
Remove the O–ring.

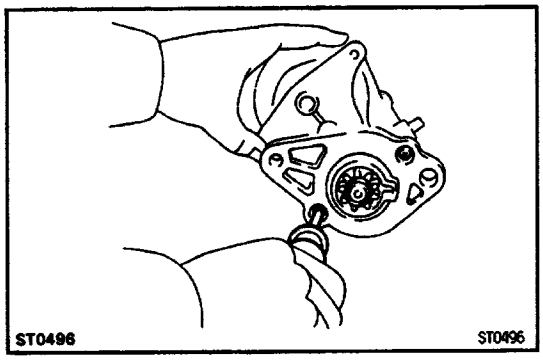

2. REMOVE STARTER HOUSING FROM MAGNETIC SWITCH ASSEMBLY

(a) Remove the 2 screws.

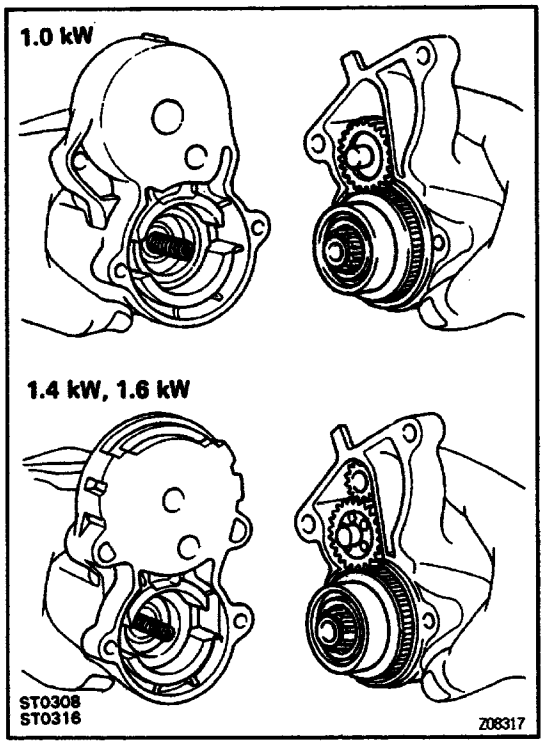

(b) Remove the starter housing with the pinion gear (1.4 kW, 1.6 kW), idler gear, bearing and clutch assembly.

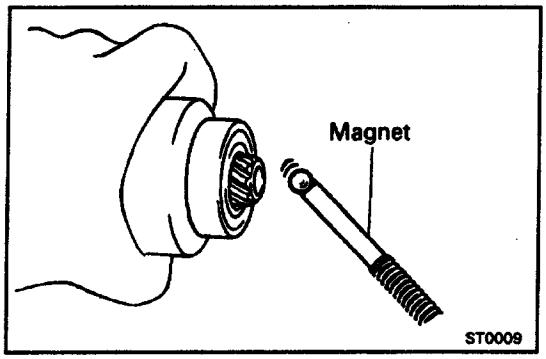

3. REMOVE CLUTCH ASSEMBLY AND GEARS FROM STARTER HOUSING

4. REMOVE STEEL BALL AND SPRING

Using a magnetic finger, remove the spring and steel ball from the clutch shaft hole.

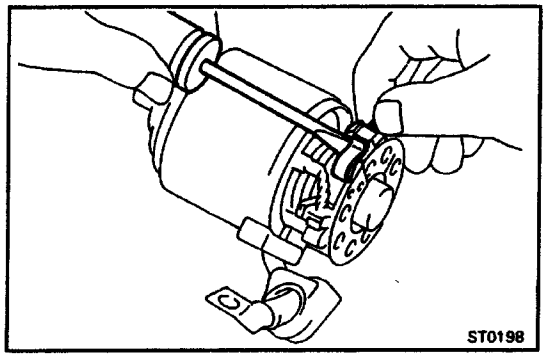

6. REMOVE BRUSHES AND BRUSH HOLDER

(a) Remove the 2 screws and pull the end cover with 0–ring (1.4 kW, 1.6 kW) oft the field frame.

(b) Using a screwdriver hold the spring back and disconnect the brush from the brush holder. Disconnect the 4 brushes, and remove the brush holder.

6. REMOVE ARMATURE FROM FIELD FRAME

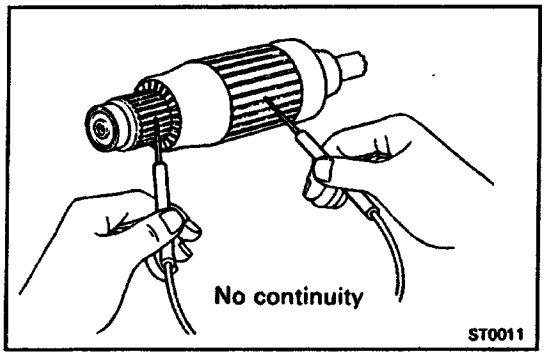

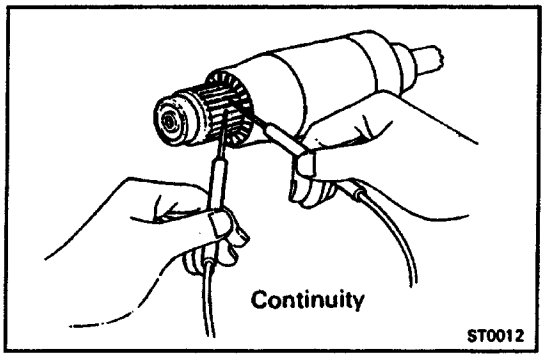

STARTER INSPECTION

Armature Coil

1. INSPECT THAT COMMUTATOR IS NOT GROUNDED

Using an ohmmeter, check that there is no continuity between the commutator and armature coil core.

If there is continuity, replace the armature.

2. INSPECT COMMUTATOR FOR OPEN CIRCUIT

Using an ohmmeter, check that there is continuity between the segments of the comrnutator.

If there is no continuity between any segment, replace the armature.

Commutator

1. INSPECT COMMUTATOR FOR DIRTY AND BURNT SURFACES

If the surface is dirty or burnt, clean it with sandpaper (No–400) or on a lathe.

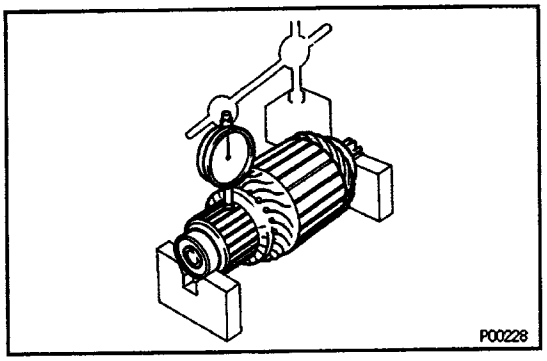

2. INSPECT COMMUTATOR CIRCLE RUNOUT

(a) Place the commutator on V–blocks.

(b) Using a dial indicator, measure the circle runout.

Maximum circle runout:

0.05 mm (0.0020 in.)

If the circle runout is greater than maximum, correct it on a lathe.

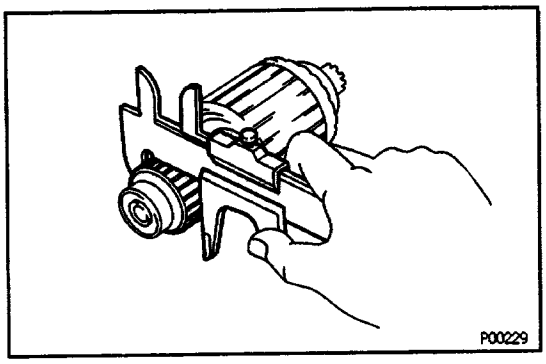

3. INSPECT COMMUTATOR DIAMETER

Using vernier calipers, measure the commutator diameter.

Standard diameter:

30 mm (1.18 in.)

Minimum diameter:

29 mm (1.14 in.)

If the diameter is less than minimum, replace the armature.

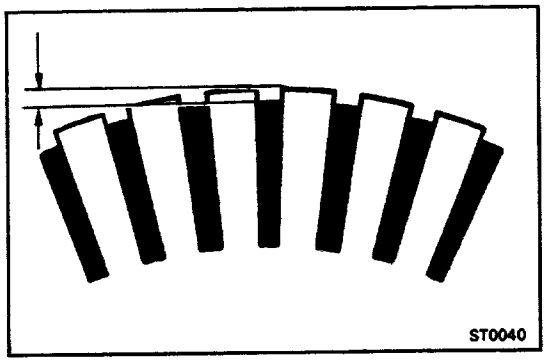

4. INSPECT UNDERCUT DEPTH OF SEGMENT

Check that the undercut depth is clean and free of foreign material. Smooth out the edge.

Standard undercut depth:

0.6 mm (0.024 in.)

Minimum undercut depth:

0.2 mm (0.008 in.)

If the undercut depth is less than minimum, correct it with a hacksaw blade.

Field Frame (Field Coil)

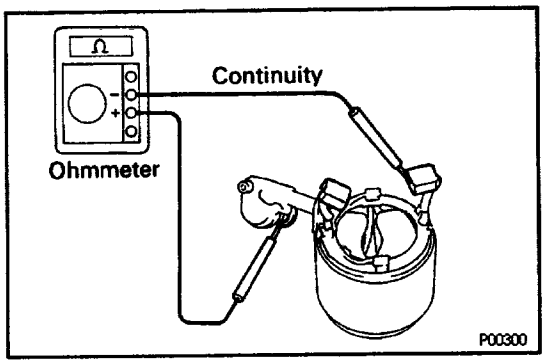

1. INSPECT FIELD COIL FOR OPEN CIRCUIT

Using an ohmmeter, check that there is continuity between the lead wire and field coil brush lead.

If there is no continuity, replace the field frame.

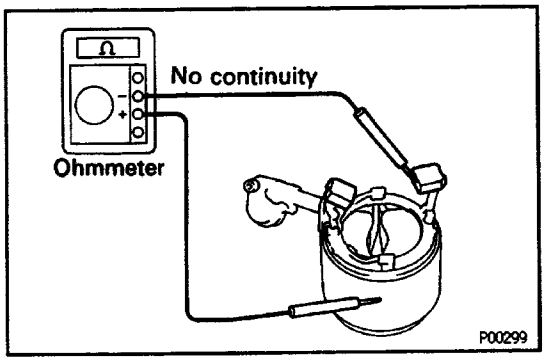

2. INSPECT THAT FIELD COIL IS NOT GROUNDED

Using an ohmmeter, check that there is no continuit) between the field coil end and field frame.

If there is continuity, repair or replace the field frame.

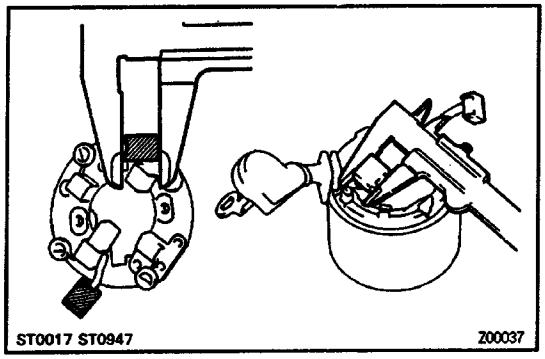

Brushes

INSPECT BRUSH LENGTH

Using vernier calipers, measure the brush length.

Standard length:

1.0kW: 13.5 mm (0.531 in.)

1.4kW,1.6kW: 15.5 mm (0.6 10 in.)

Minimum length:

8.5 mm (0.335 In.)

If the length is less than minimum, replace the brush holder and field frame.

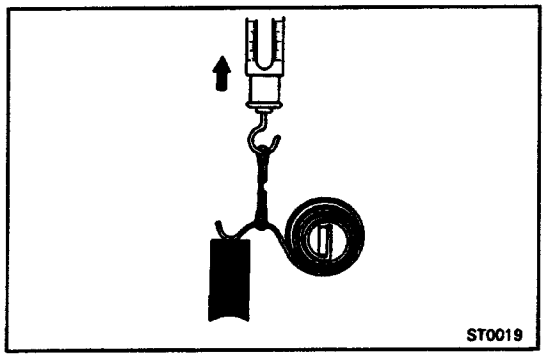

Brush Springs

INSPECT BRUSH SPRING LOAD

Take the pull scale reading the instant the brush spring separates from the brush.

Standard installed load:

18 – 24 N (1.785 – 2.415 kgf, 3.9 – 5.3 lbf)

Minimum installed load:

12 N(1.2kgf,2.6lbf)

If the installed load is less than minimum, replace the brush springs.

HINT: Take the pull scale reading the instant the brush spring separates from the brush.

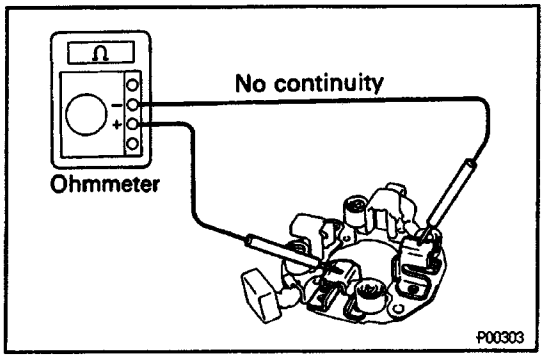

Brush Holder

INSPECT INSULATION OF BRUSH HOLDER

Using an ohmmeter, check that there is no continuity between the positive (+) and negative (–) brush holders.

If there is continuity, repair or replace the brush holder.

Clutch and Gears

1. INSPECT GEAR TEETH

Check the gear teeth on the pinion gear, idler gear and clutch assembly for wear or damage.
If damaged, replace the gear or clutch assembly.
If damaged, also check the flywheel ring gear for wear or damage.

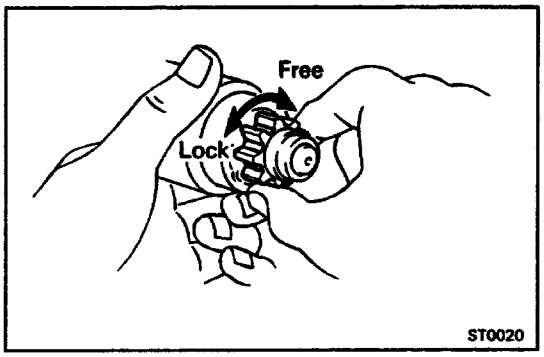

2. INSPECT CLUTCH

Rotate the clutch pinion gear clockwise and check that it turns freely. Try to rotate the clutch pinion counter-clockwise and check that it locks.
If necessary, replace the clutch assembly.

Bearings

1. INSPECT BEARINGS

Turn each bearing by hand while applying inward force.
If the resistance is felt or if the bearing sticks, replace the bearing.

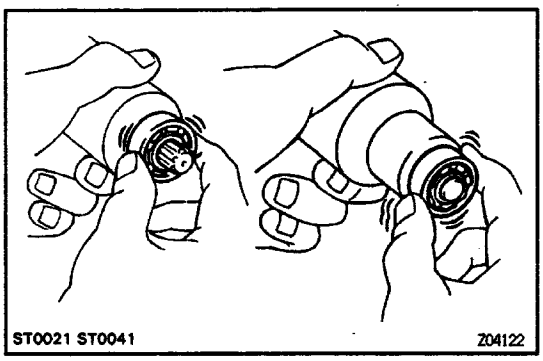

2. IF NECESSARY, REPLACE BEARINGS

(a) Using SST, remove the bearing.
SST 09286 – 46011

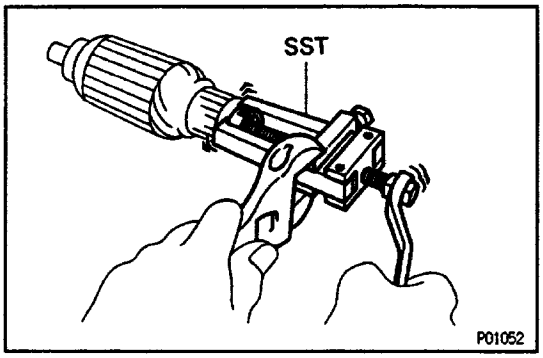

(b) Using SST and a press, press in a new bearing.
SST
1.OkW: 09285–76010
1.4kW, 1.6kW: 09201–41020

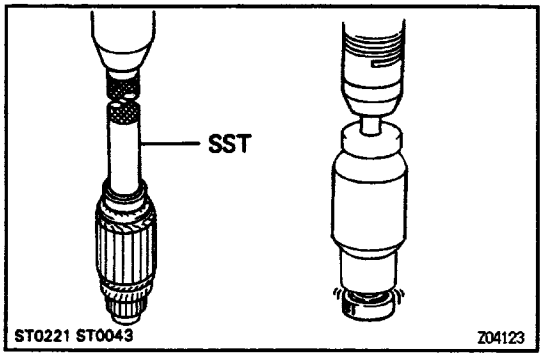

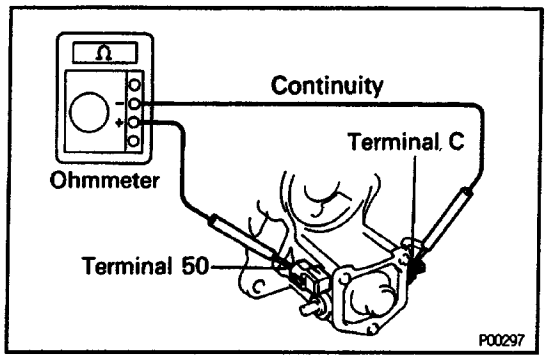

Magnetic Switch

1. DO PULL–IN COIL OPEN CIRCUIT TEST

Using an ohmmeter, check that there is continuity between terminals 50 and C.

If there is no continuity, replace the magnetic switch assembly.

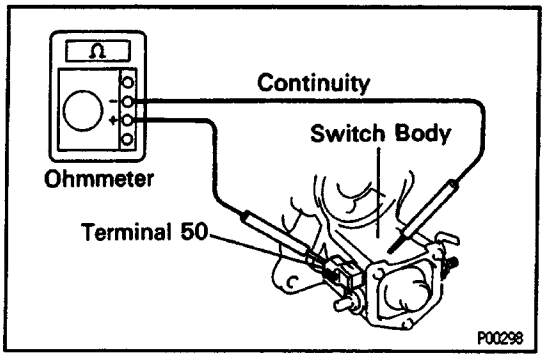

2. DO HOLD–IN COIL CIRCUIT TEST

Using an ohmmeter, .check that there is continuity between terminal 50 and the switch body.

If there is no continuity, replace the magnetic switch assembly.

STARTER ASSEMBLY

(See Components for Disassembly and Assembly)

HINT: Use high–temperature grease to lubricate the bearings and gears when assembling the starter.

1. PLACE ARMATURE INTO FIELD FRAME

Apply grease to the armature bearings and insert the armature into the field frame.

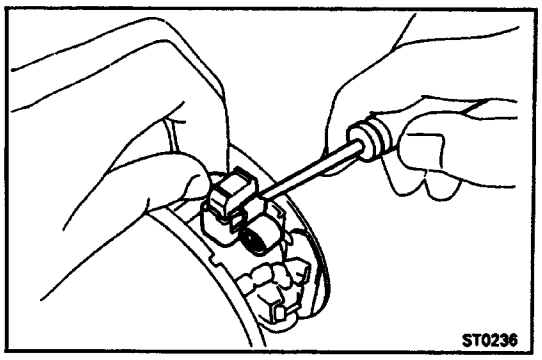

2. INSTALL BRUSH HOLDER

(a) Place the brush holder over the frame.

(b) Using a screwdriver, hold the brush spring back, and connect the brush into the brush holder. Connect the 4 brushes.

HINT: Check that the positive (+) lead wires are not grounded.

(c) 1.4 kW, 1.6 kW:
Place the O–ring on the field frame.

(d) Install the end cover to the field frame with the 2 screws.

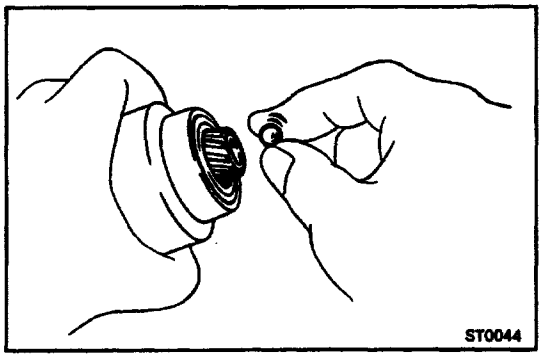

3. INSERT STEEL BALL INTO CLUTCH SHAFT HOLE

(a) Apply grease to the steel ball.
(b) Insert the steel ball into the clutch shaft hole.

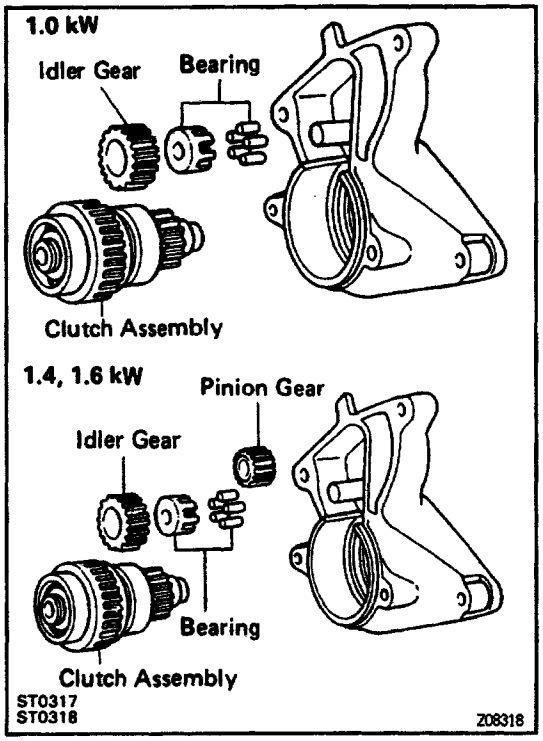

4. INSTALL GEARS AND CLUTCH ASSEMBLY

(a) Apply grease to the gears and clutch assembly.
(b) Place the clutch assembly, idler gear, bearing and pinion gear in the starter housing.

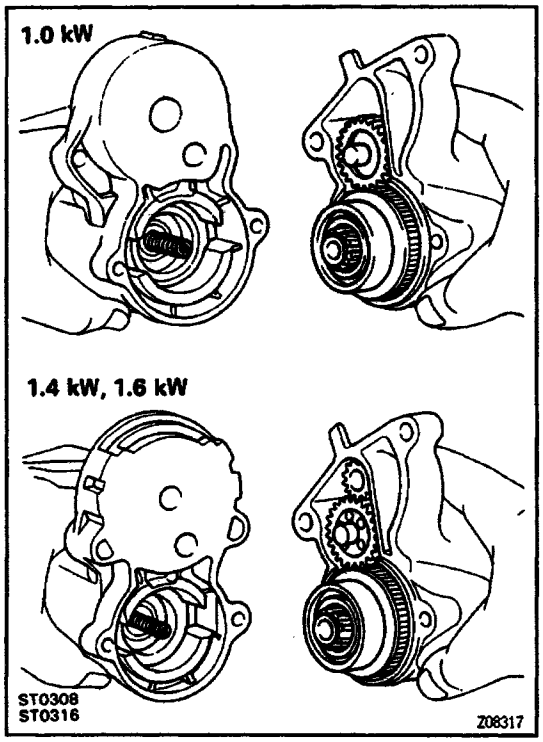

5. INSTALL STARTER HOUSING

(a) Apply grease to the return spring.
(b) Insert the return spring into the magnetic hole.
(c) Place the starter housing on the magnetic switch and install the 2 screws.

Torque:

22R–E1.4kW: 5.9 N–m (60 kgf–cm 52 in.lbf)
Others: 9.3 N–m (95 kgf–cm 82 in.–lbf)

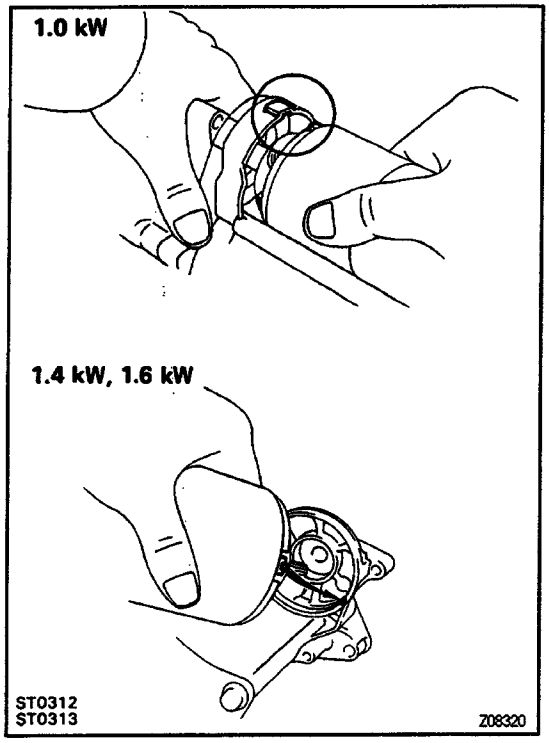

6. INSTALL FIELD FRAME WITH ARMATURE TO MAGNETIC SWITCH ASSEMBLY

(a) 1.4 kW, 1.6 kW:
Place the O–ring on the field frame.

(b) Align the protrusion of the field frame with the cutout of the magnetic switch.

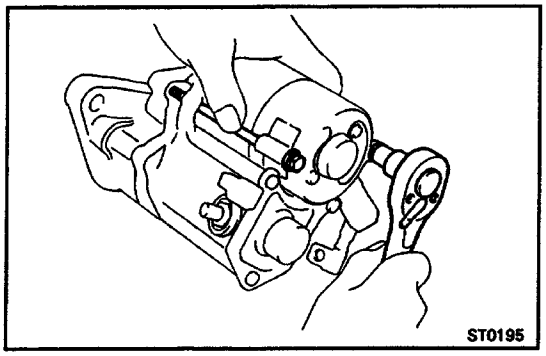

(c) Install the 2 through bolts.

Torque:
22R–E1.4kW: 5.9 N–m (60 kgf–cm 52 in.–lbf)
Others: 9.3 N–m (95 kgf–cm 82 MAW)

(d) Connect the lead wire to the magnetic switch terminal C, and install the nut.

Torque: 7.9 N–m (81 kgf–cm 70 in.–lbf)

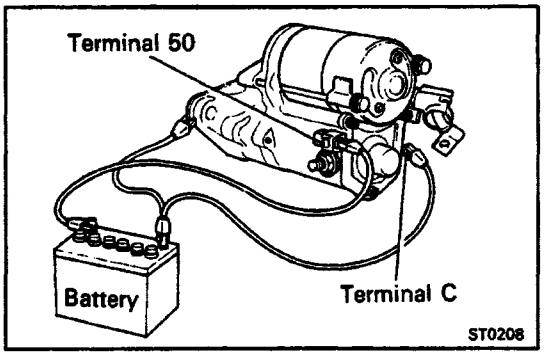

STARTER TEST

NOTICE: These tests must be done within 3 to 5 seconds to avoid burning out the coil.

1. DO PULL–IN TEST

(a) Disconnect the field coil lead wire from terminal C.

(b) Connect the battery to the magnetic switch as shown.

Check that the clutch pinion gear moves outward.

If the clutch pinion gear does not move, replace the magnetic switch assembly.

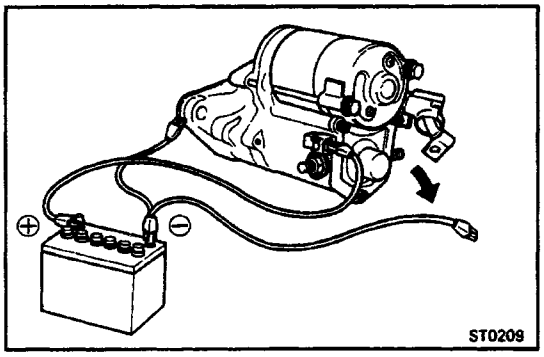

2. DO HOLD–IN TEST

With battery connected as above with the clutch pinion gear out, disconnect the negative (–) lead from terminal C. Check that the pinion gear remains out.

If the clutch pinion gear returns inward, replace the magnetic switch assembly.

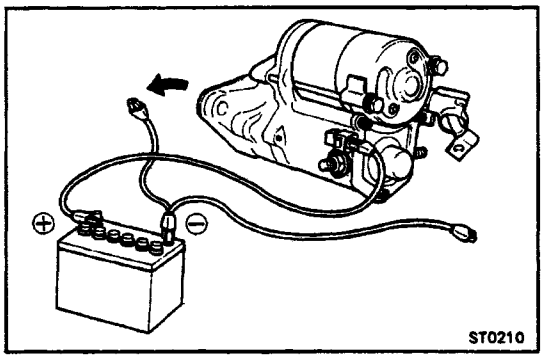

3. INSPECT CLUTCH PINION GEAR RETURN

Disconnect the negative (–) lead from the switch body.

Check that the clutch pinion gear returns inward.

If the clutch pinion gear does not return, replace the magnetic switch assembly.

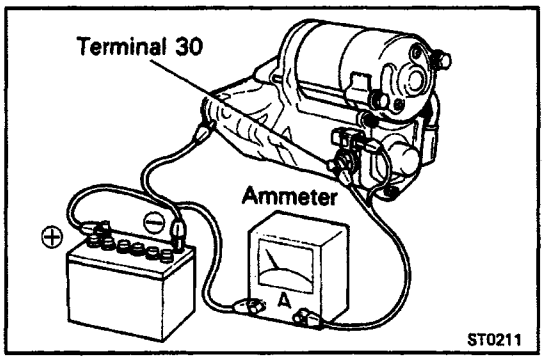

4. DO NO–LOAD PERFORMANCE TEST

(a) Connect the battery and ammeter to the starter as shown.

(b) Check that the starter rotates smoothly and steadily with the pinion gear moving out. Check that the ammeter reads the specified current.

Specified current:

At 11.5V: 90 A or less

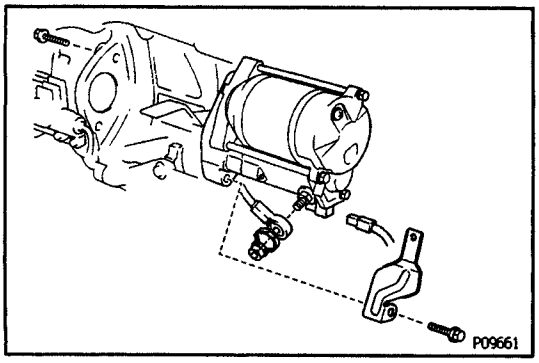

STARTER INSTALLATION

1. INSTALL STARTER MOTOR

Place the starter motor in the flywheel bellhousing, and install and torque the starter mounting bolts.

Torque: 39 N–m (400 kgf–cm, 29 ft–lbf)

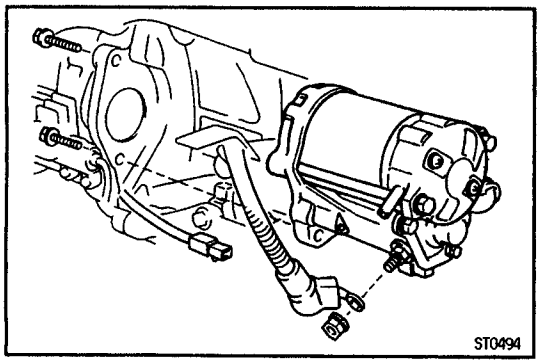

2. CONNECT 2 WIRES TO STARTER

Connect the connector to the terminal on the magnetic switch. Connect the cable from the battery to the terminal on the switch, and install the nut.

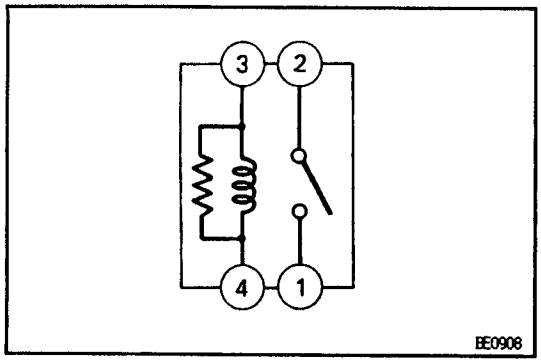

STARTER RELAY

STARTER RELAY INSPECTION

LOCATION: The relay is located in the No.1 junction block on the driver's side.

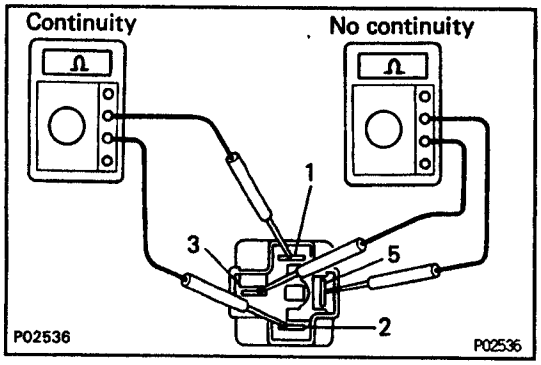

1. INSPECT RELAY CONTINUITY

(a) Using an ohmmeter, check that there is continuity between terminals 1 and 2.

(b) Check that there is no continuity between terminals 3 and 5.

If continuity is not as specified, replace the relay.

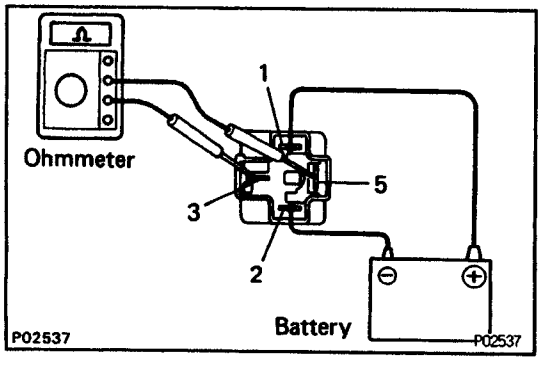

2. INSPECT RELAY OPERATION

(a) Apply battery voltage across terminals 1 and 2.

(b) Check that there is continuity between terminals 3 and 5.

If operation is not as described, replace the relay.

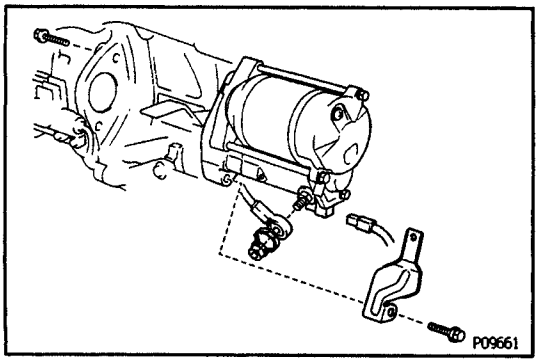

STARTER INSTALLATION

1. INSTALL STARTER MOTOR

Place the starter motor in the flywheel bellhousing, and install and torque the starter mounting bolts.

Torque: 39 N–m (400 kgf–cm, 29 ft–lbf)

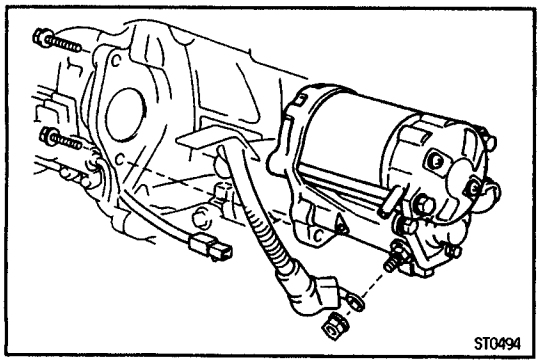

2. CONNECT 2 WIRES TO STARTER

Connect the connector to the terminal on the magnetic switch. Connect the cable from the battery to the terminal on the switch, and install the nut.

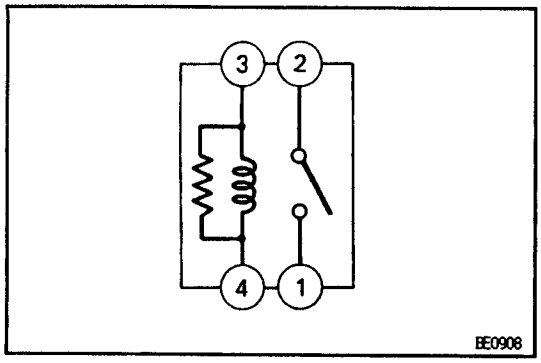

STARTER RELAY

STARTER RELAY INSPECTION

LOCATION: The relay is located in the No.1 junction block on the driver's side.

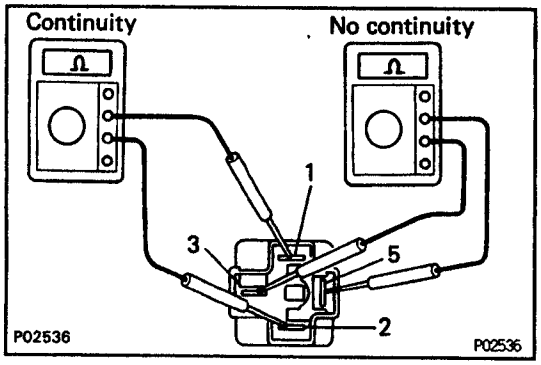

1. INSPECT RELAY CONTINUITY

(a) Using an ohmmeter, check that there is continuity between terminals 1 and 2.

(b) Check that there is no continuity between terminals 3 and 5.

If continuity is not as specified, replace the relay.

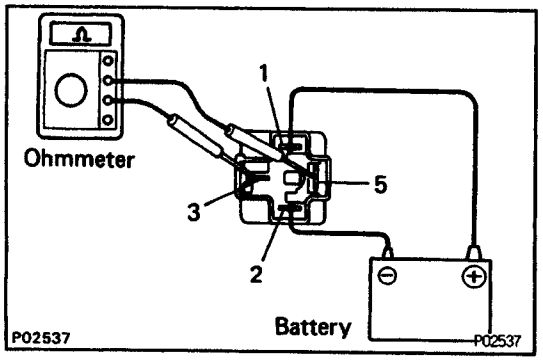

2. INSPECT RELAY OPERATION

(a) Apply battery voltage across terminals 1 and 2.

(b) Check that there is continuity between terminals 3 and 5.

If operation is not as described, replace the relay.

DESCRIPTION

The starter is a reduction type with a small, high–speed motor used to drive the pinion gear.

SYSTEM CIRCUIT

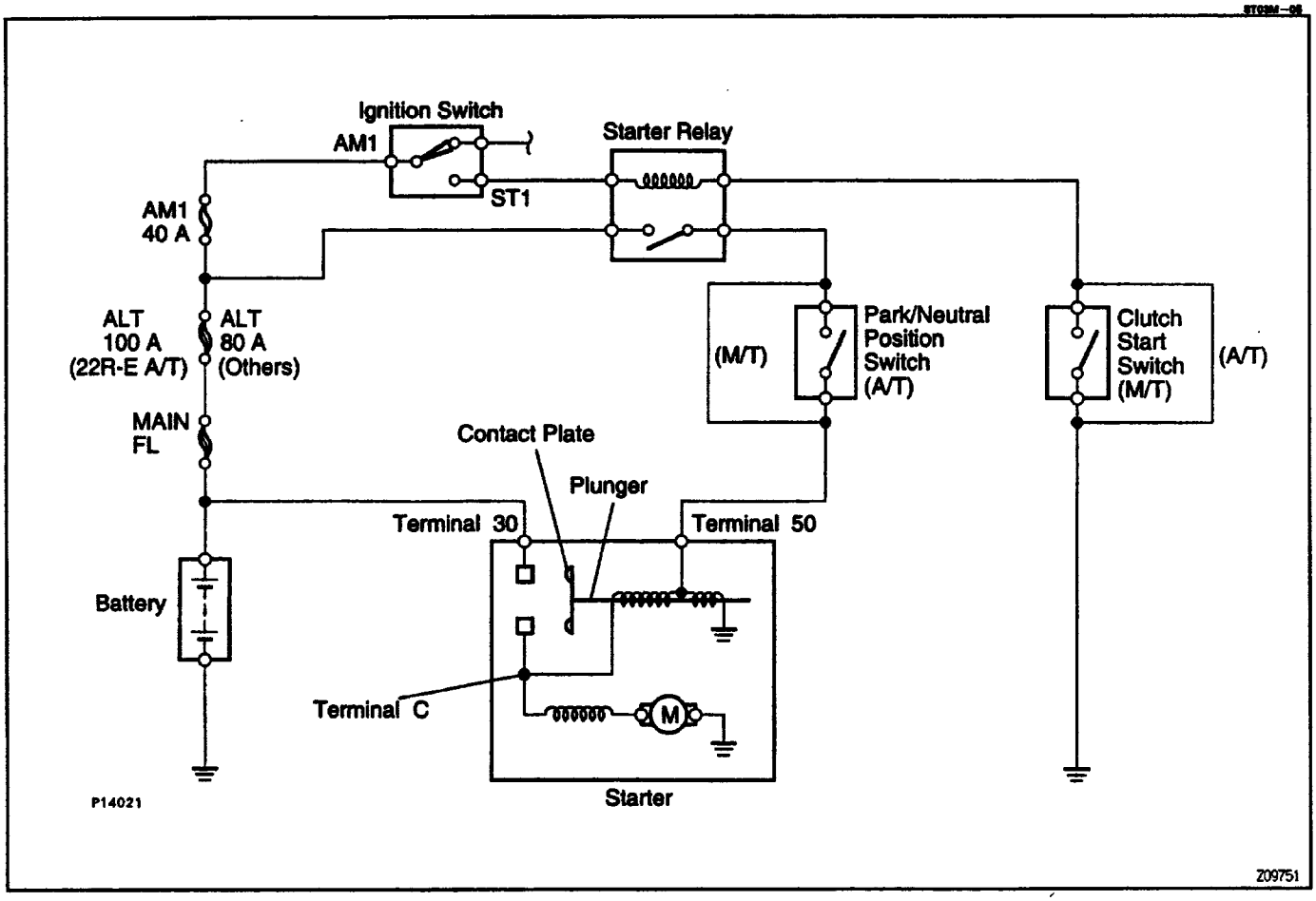

OPERATION

When the ignition switch is turned to START position, current flows from terminal 50 to the coil of the solenoid and the plunger is pulled by the magnetic force of the coil. When the plunger is pulled to the left as shown above, the contact plate of the plunger allows current from the battery to flow directly from terminal 30 to the motor, and the starter rotates.

When the engine is running and the ignition switch is returned to ON, the magnetic force of the coil disappears and the contact plate of the plunger is returned to its original position by the return spring. Battery voltage no longer flows from terminal 30, so the motor stops.

COMPONENTS

TR00T–03

[3VZ-E/R150F]

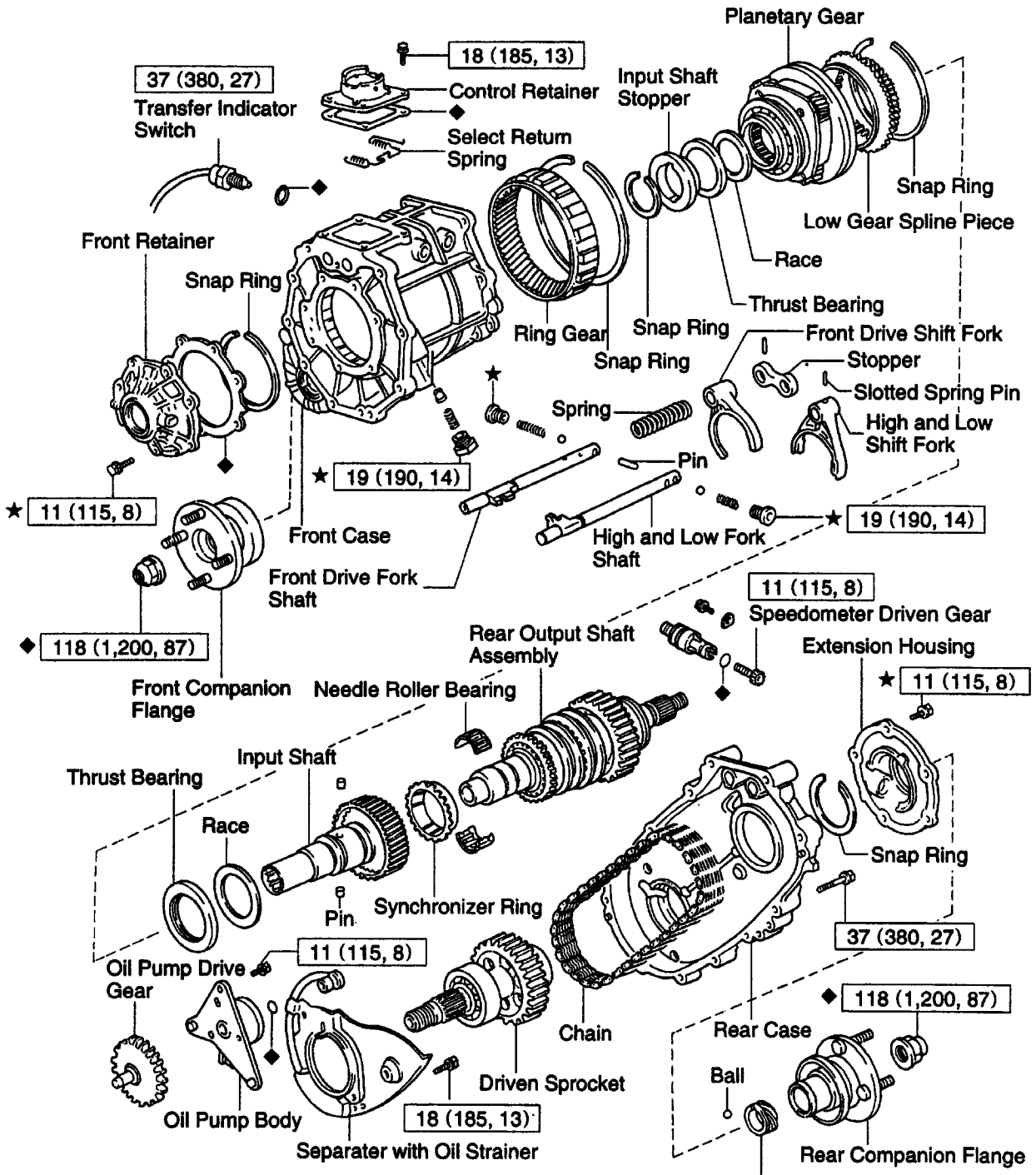

N·m (kgf·cm, ft·lbf) : Specified torque
◆ Non-reusable part
★ Precoated part

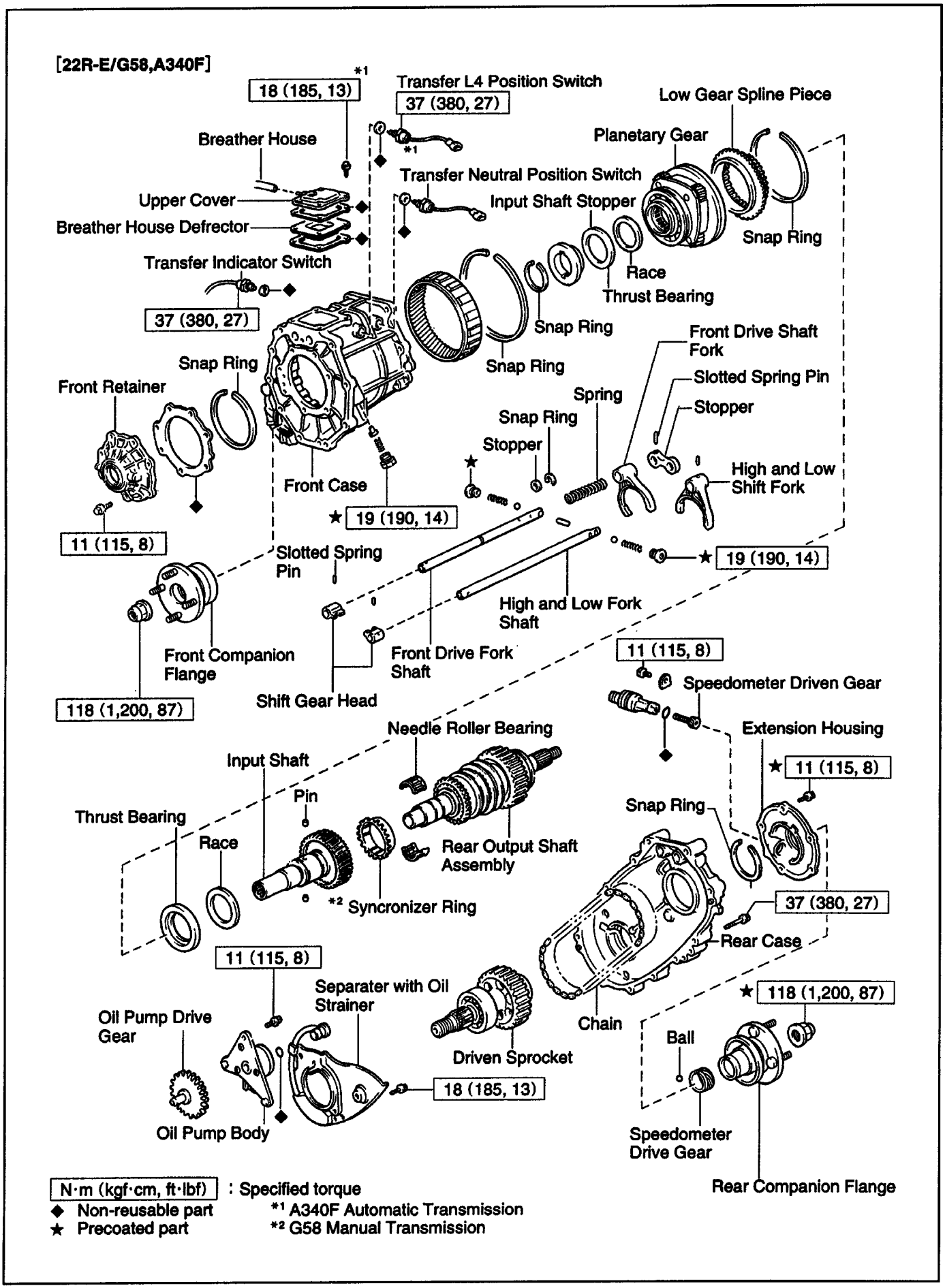

N·m (kgf·cm, ft·lbf) : Specified torque
◆ Non-reusable part
★ Precoated part
*1 A340F Automatic Transmission
*2 G58 Manual Transmission

TRANSFER

DESCRIPTION

The Transfer transmits the drive force from the transmission to the front wheels, switching between 2WD, 4WD (High) and 4WD (Low).

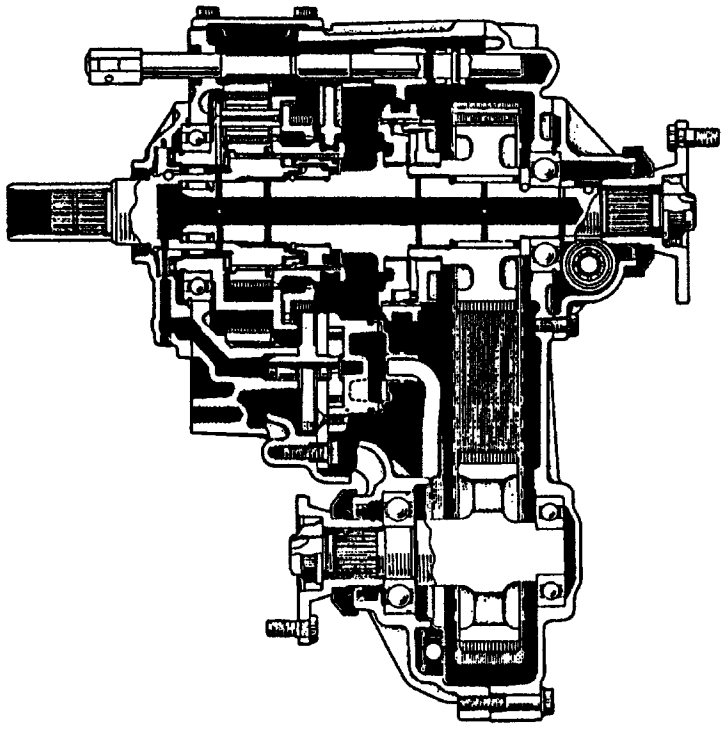

TF0637

Transfer / Items		VF1A Type Transfer	
Type of Engine		22R-E	3VZ-E
Type of Transmission		G58, *A340F	R150F
Type of Reduction Gear		Planetary Gear	
Gear Ratio	H2 and H4	1.000	
	L4	2.566	
Oil Capacity liters (US qts., Imp. qts.)		1.1 (1.2, 1.0)	
Oil Grade		API GL-3 or GL-4 or GL-5	
Oil Viscosity		SAE 75W-90	

*: Automatic Transmission

Z14318

DRIVEN SPROCKET

COMPONENTS

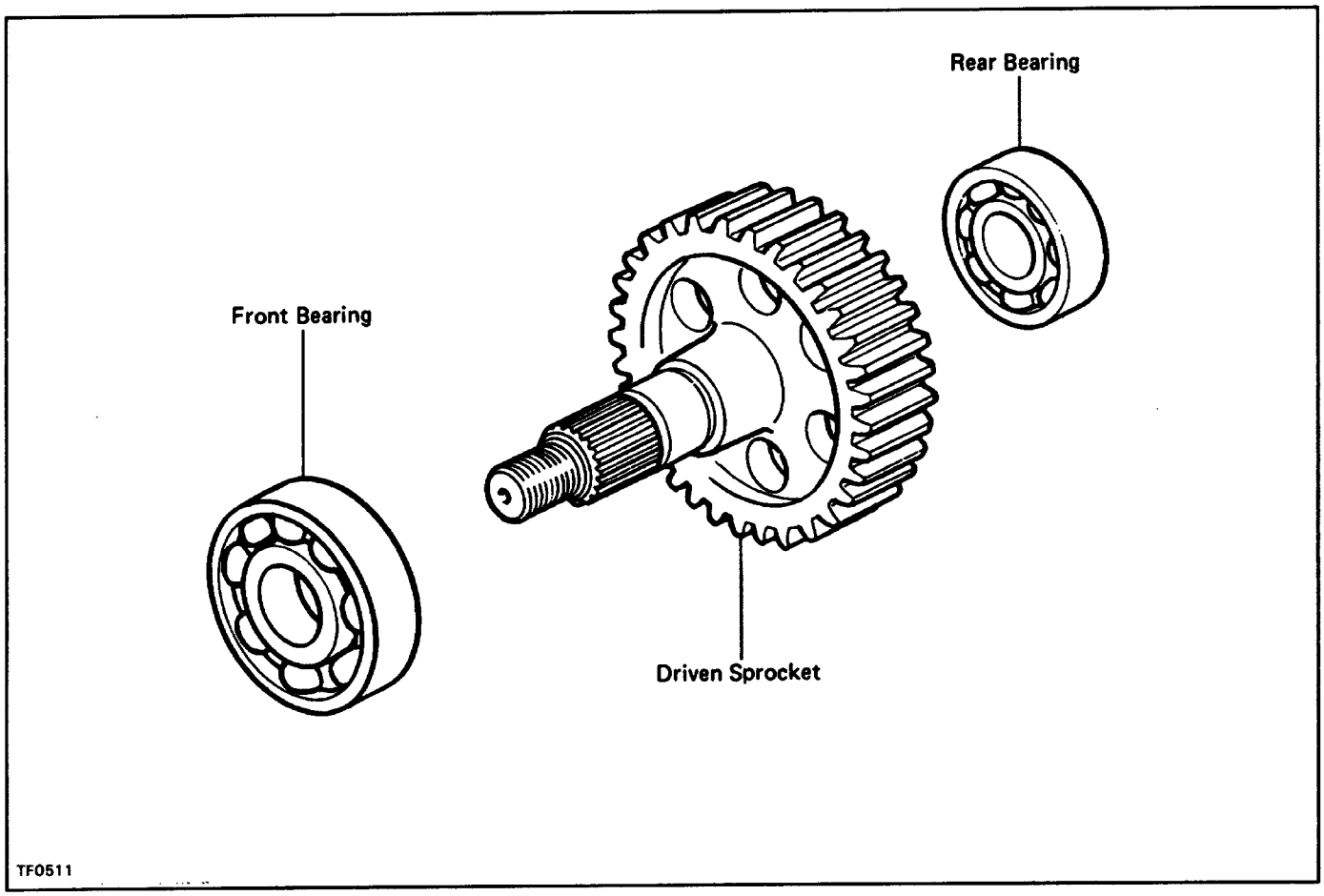

DRIVEN SPROCKET DISASSEMBLY

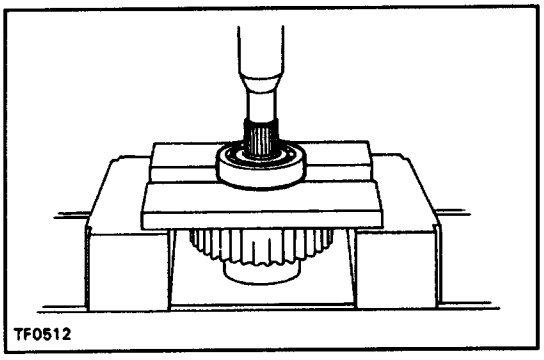

1. REMOVE FRONT BEARING

Using a press, remove the front bearing.

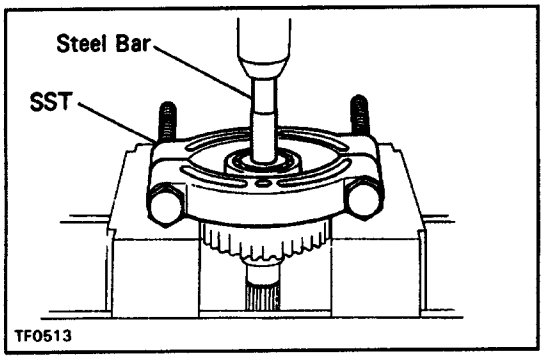

2. REMOVE REAR BEARING

Using SST and a press, remove the rear bearing.
SST 09950–00020

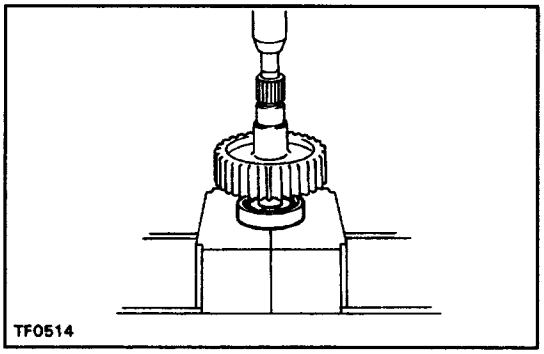
TF0514

DRIVEN SPROCKET ASSEMBLY

1. INSTALL REAR BEARING

Using a press, install the rear bearing.

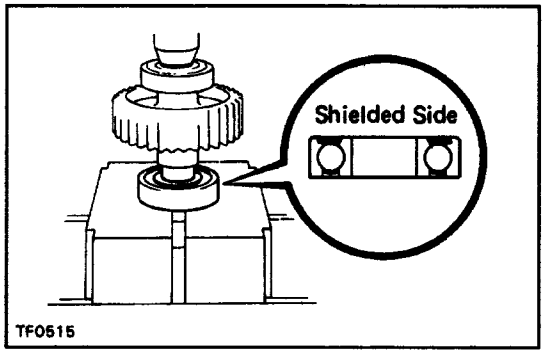

TF0515

2. INSTALL FRONT BEARING

Using a press, install the front bearing.

HINT: Make sure to install the bearing in the correct direction.

INPUT SHAFT

COMPONENTS

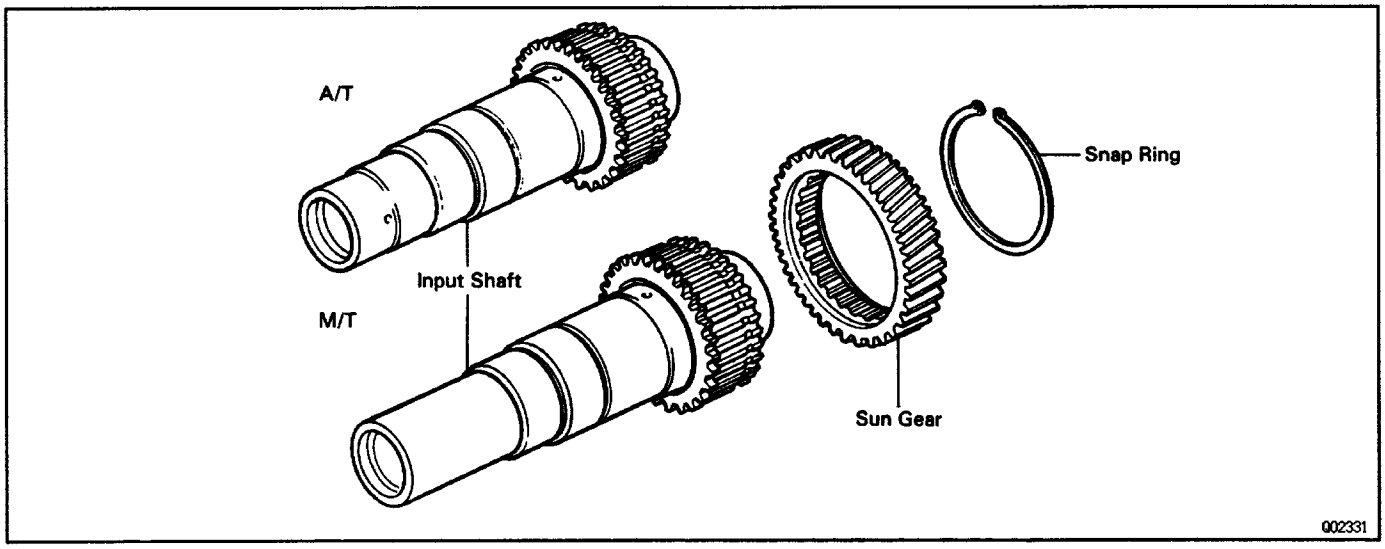

INPUT SHAFT DISASSEMBLY

REMOVE SUN GEAR

(a) Using snap ring pliers, remove the snap ring.

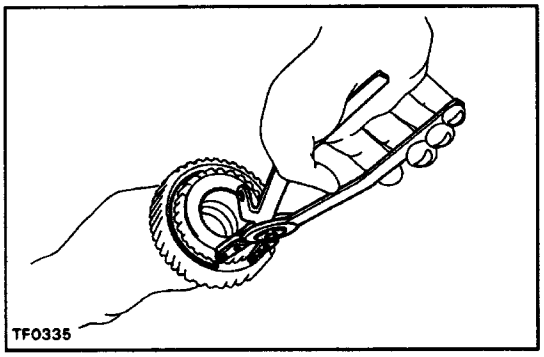

(b) Remove the sun gear from the input shaft.

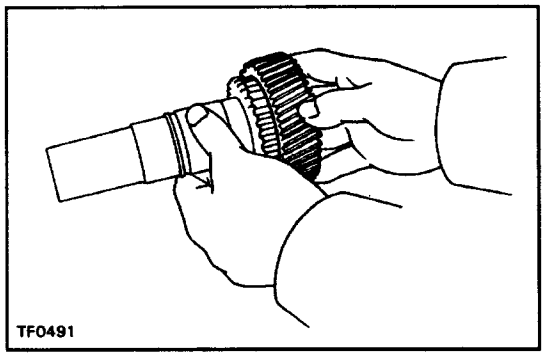

INPUT SHAFT INSPECTION

1. INSPECT INPUT SHAFT

(a) Using a micrometer, measure the outer diameter of the input shaft journal surface.

Minimum diameter:

47.59 mm (1.8736 in.)

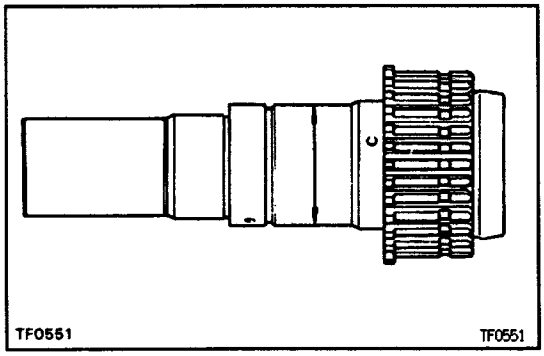

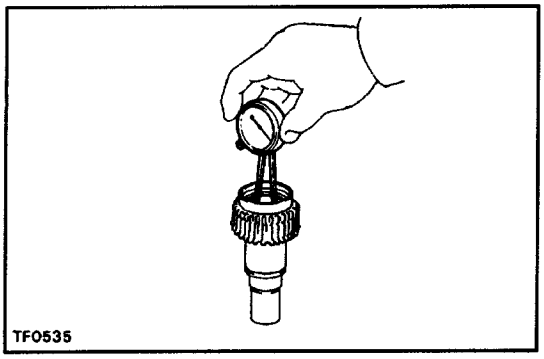

(b) Using a dial indicator, measure the inside diameter of the input shaft bushing.

Maximum inside diameter:

39.14 mm (1.5409 in.)

If the inside diameter exceeds the maximum, replace the input shaft.

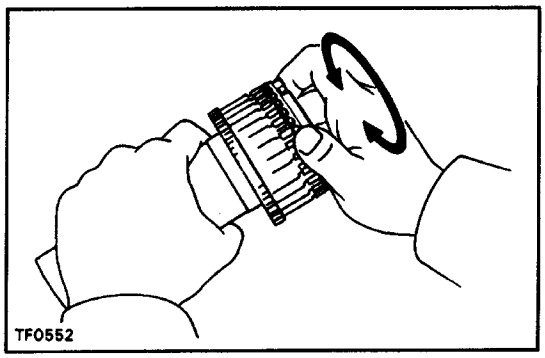

2. INSPECT SYNCHRONIZER RING (M/T)

(a) Turn the ring and push it in to check the braking action.

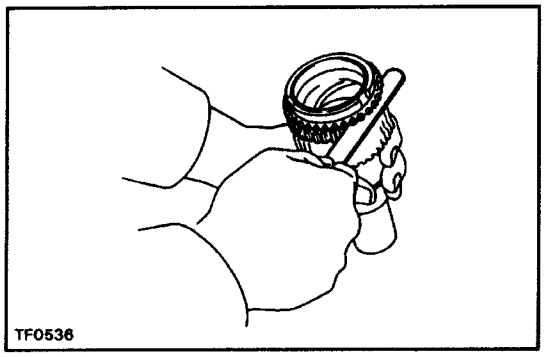

(b) Measure the clearance between the synchronizer ring back and the input shaft spline end.

Standard clearance:

1.15 – 1.85 mm (0.0453 – 0.0728 in.)

Minimum clearance:

0.8 mm (0.031 in.)

If the clearance is less than the minimum, replace the synchronizer ring.

INPUT SHAFT ASSEMBLY

INSTALL SUN GEAR

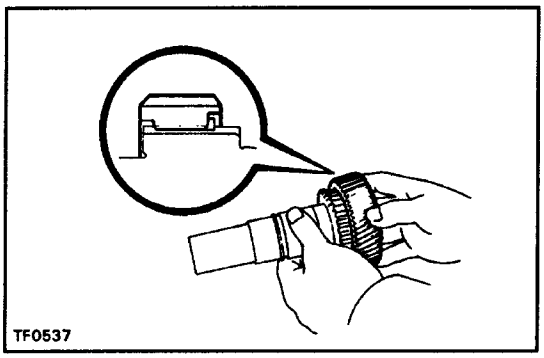

(a) Install the sun gear to the input shaft.

HINT: Make sure to install the sun gear in the correct direction.

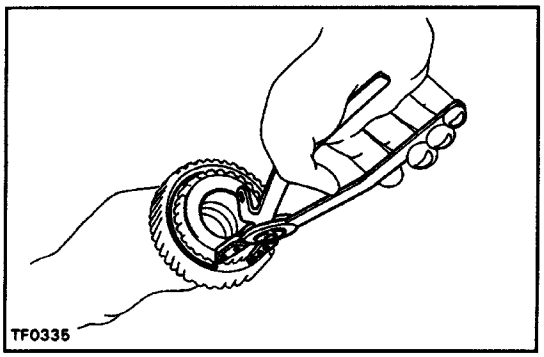

(b) Using snap ring pliers, install the snap ring.

OIL PUMP BODY

COMPONENTS

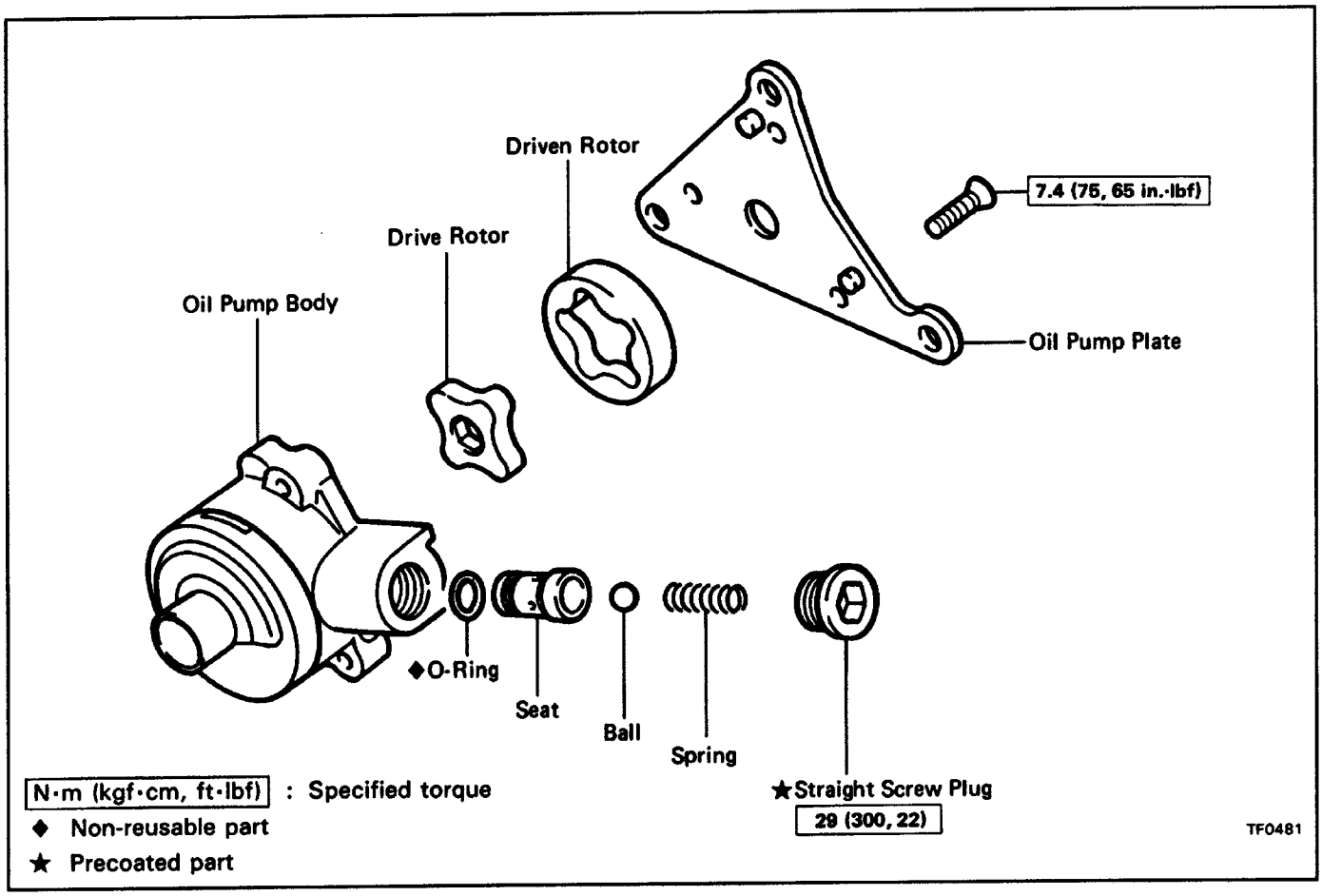

OIL PUMP BODY DISASSEMBLY

1. CHECK OIL PUMP OPERATION

Install the oil pump drive gear to the drive rotor, check that the drive rotor turns smoothly.

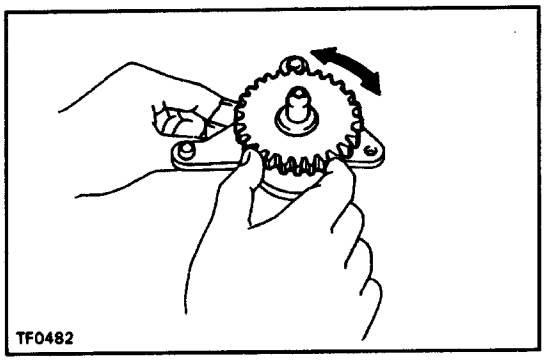

2. REMOVE STRAIGHT SCREW PLUG, SPRING, BALL AND SEAT

(a) Using a hexagon wrench, remove the straight screw plug.

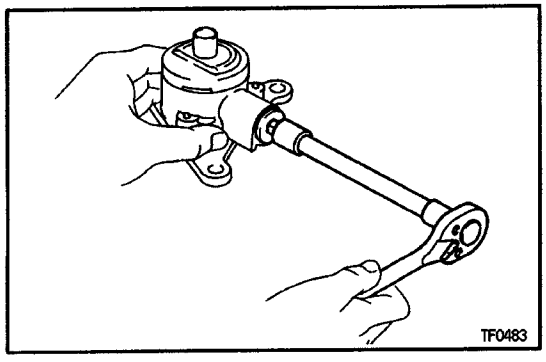

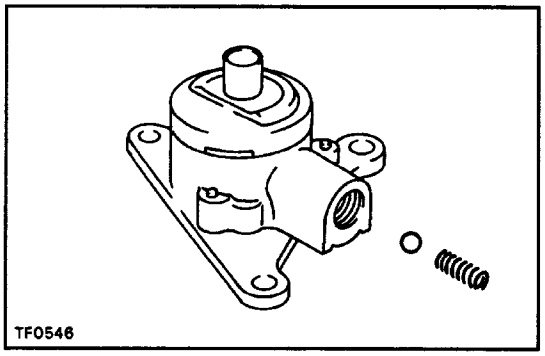

(b) Using a magnetic finger remove the spring and ball.

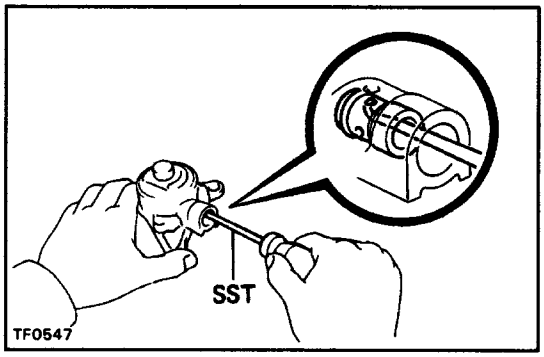

(c) Using SST, pull out the seat.
SST 09921– 00010
(d) Remove the O–ring from the seat.

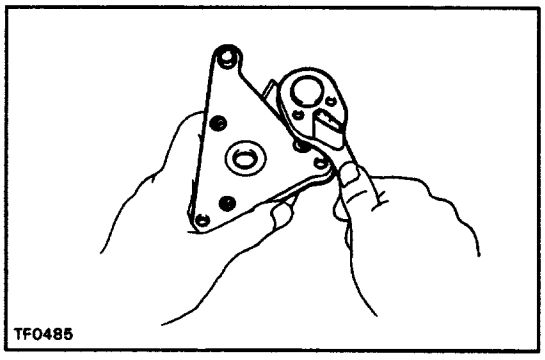

3. REMOVE OIL PUMP PLATE

(a) Using a torx socket wrench, unscrew the 3 torx screws.
(Torx socket wrench T30 09042–00010)
(b) Remove the oil pump plate.

4. REMOVE DRIVE ROTOR AND DRIVEN ROTOR

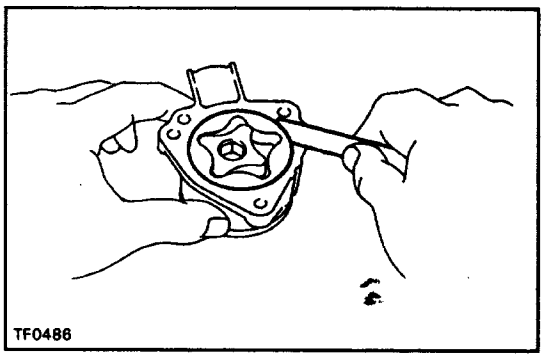

OIL PUMP BODY INSPECTION

1. INSPECT DRIVEN ROTOR BODY CLEARANCE

Push the driven rotor to one side of the body.
Using a feeler gauge, measure the clearance.

Standard clearance:
0.10 – 0.16 mm (0.0039 – 0.0063 in.)

Maximum clearance:
0.16 mm (0.0063 in.)

If the clearance exceeds the maximum, replace the drive rotor, driven rotor or pump body.

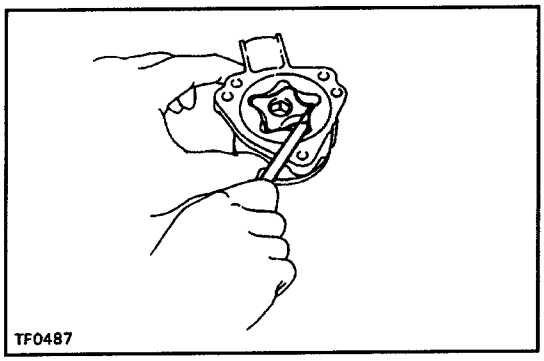

2. INSPECT BOTH ROTORS TIP CLEARANCE

Using a feeler gauge, measure the clearance between both rotor tips.

Standard clearance:

0.08 – 0:1 6 mm (0.0031 – 0.0063 in.)

Maximum clearance:

0.16 mm (0.0063 in.)

If the clearance exceeds the maximum, replace the drive rotor driven rotor or pump body.

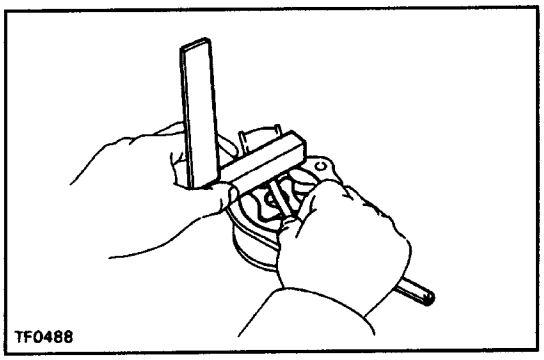

3. INSPECT BOTH ROTORS SIDE CLEARANCE

Using a steel straight edge and feeler gauge, measure the clearance between the rotors and straight edge.

Standard clearance:

0.03 – 0.08 mm (0.0012 – 0.0031 in.)

Maximum clearance:

0.08 mm (0.0031 In.)

If the clearance exceeds the maximum, replace the drive rotor, driven rotor or pump body.

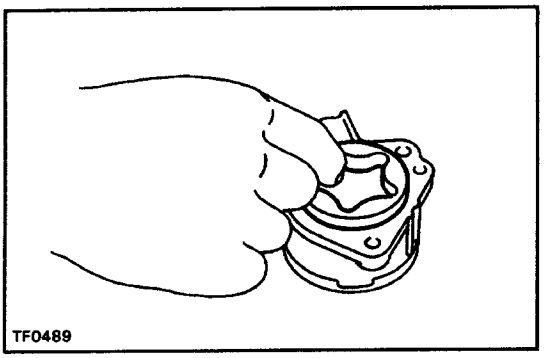

OIL PUMP BODY ASSEMBLY

1. INSTALL OIL PUMP DRIVE ROTOR AND DRIVEN ROTOR

(a) Apply gear oil to both rotors.

(b) Install the driven rotor.

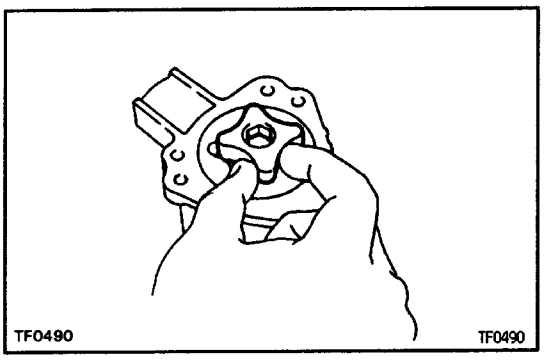

(c) Install the drive rotor.

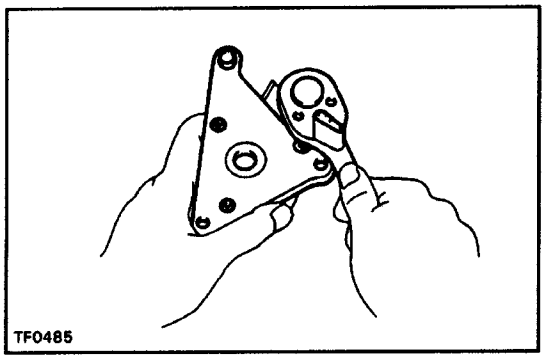

2. INSTALL OIL PUMP PLATE

(a) Install the oil pump plate.

(b) Using a torx socket wrench, tighten the 3 torx screws.

(Torx socket wrench T30 09042–00010)

Torque: 7.4 N–m (75 kgf–cm, 65 in.–lbf)

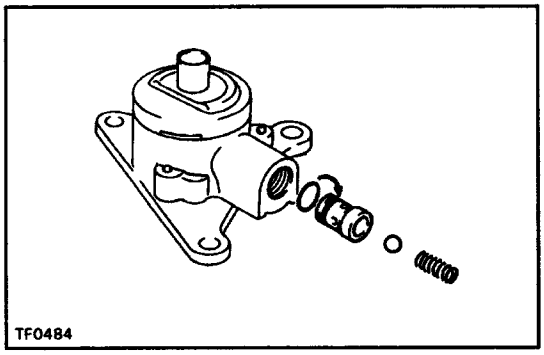

3. INSTALL SEAT, BALL, SPRING AND STRAIGHT SCREW PLUG

(a) Install a new O–ring to the seat.

(b) Install the seat, ball and spring.

HINT: When installing the seat, push the seat until it touches the bottom of the hole in the body.

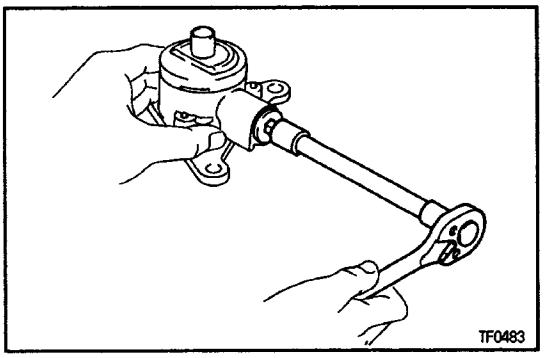

(c) Apply liquid sealer to the plug.

Sealant: Part No. 08833–00080, THREE BOND 1344, LOCTITE 242 or equivalent

(d) Using a hexagon wrench, torque the plug.

Torque: 29 N–m (300 kgf–cm, 22 ft–lbf)

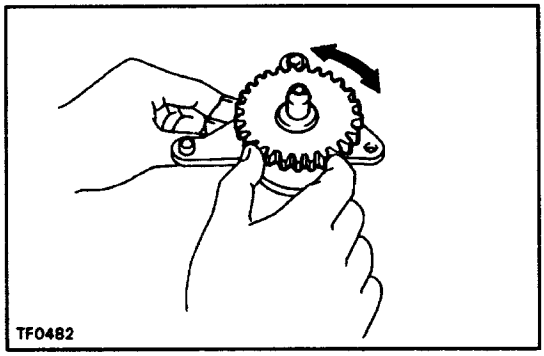

4. CHECK OIL PUMP OPERATION

Install the oil pump drive gear to the drive rotor, check that the drive rotor turns smoothly.

OIL SEALS

COMPONENTS

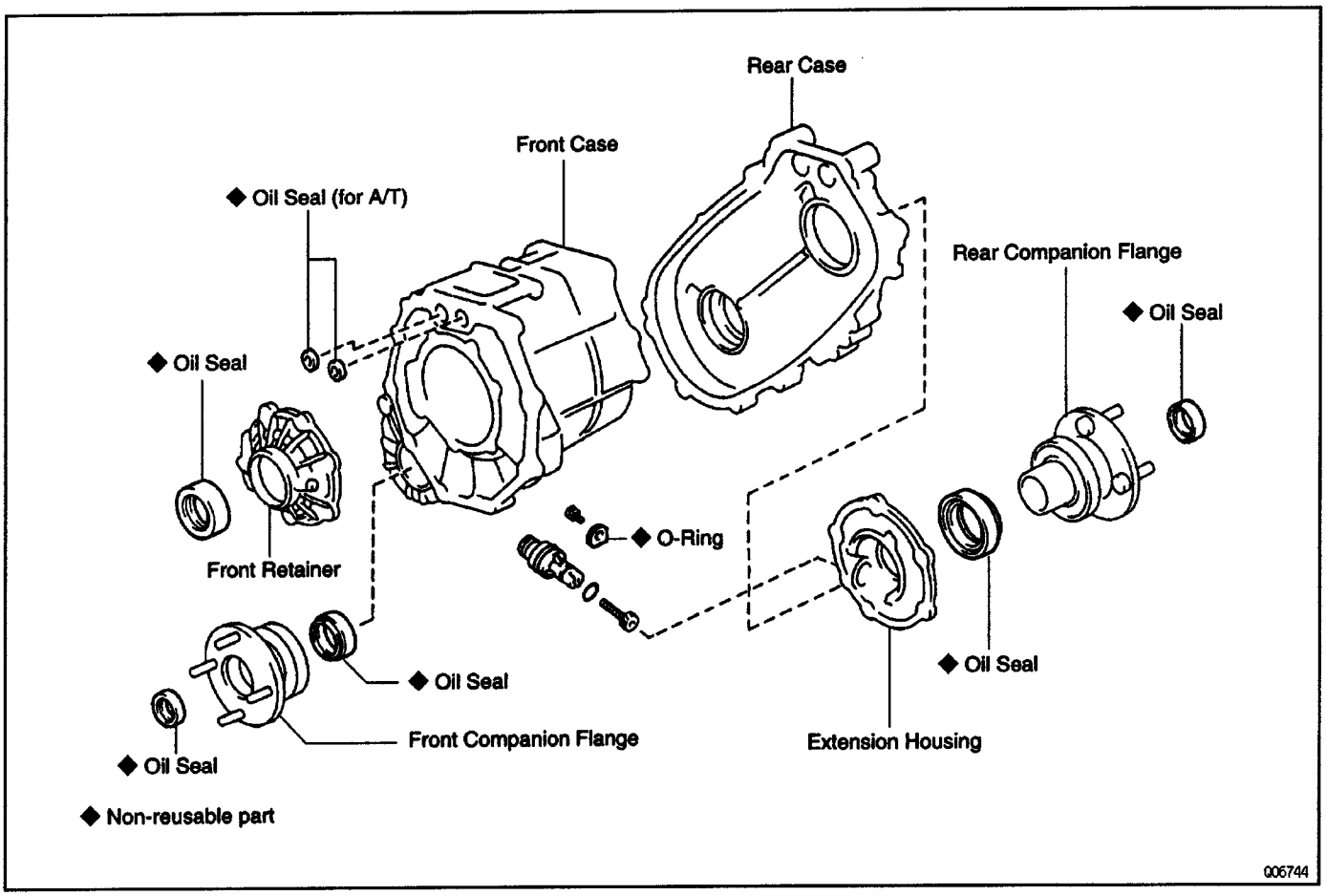

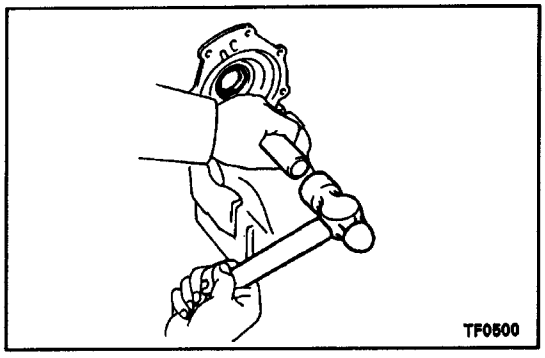

OIL SEALS REPLACEMENT

1. IF NECESSARY, REPLACE FRONT RETAINER OIL SEAL

(a) Using a screwdriver and hammer, drive out the oil seal.

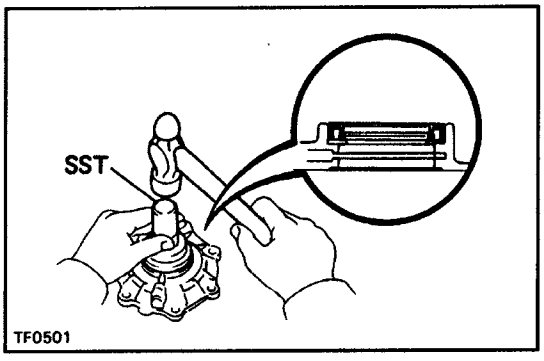

(b) Using SST and a hammer, drive in a new oil seal until its surface is flush with the retainer upper surface.

SST 09223–22010

(c) Coat the oil seal lip with MP grease.

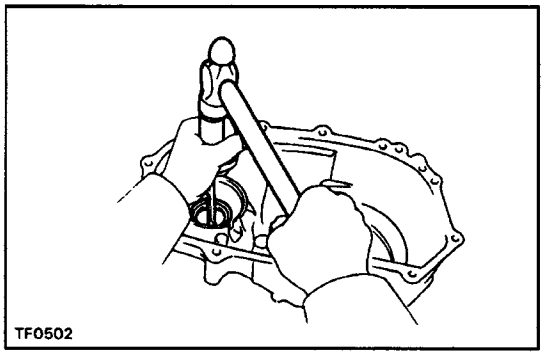

2. IF NECESSARY, REPLACE FRONT CASE OIL SEAL

(a) Using a screwdriver and hammer, drive out the oil seal.

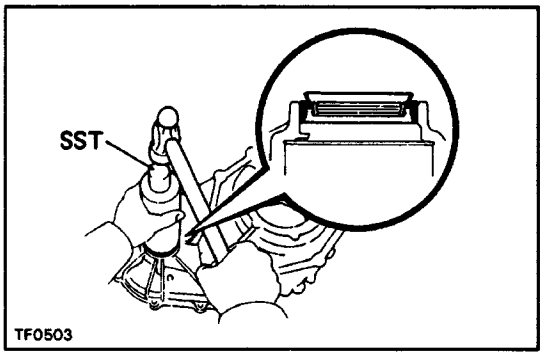

(b) Using SST and a hammer, drive in a new oil seal until its surface is flush with the case upper surface.
SST 09316 –80010 (09316 –00010)

(c) Coat the lip of the oil seal with MP grease.

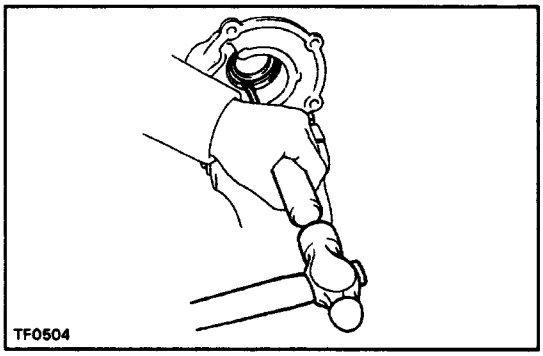

3. IF NECESSARY, REPLACE EXTENSION HOUSING OIL SEAL

(a) Using a screwdriver and hammer, drive out the oil seal.

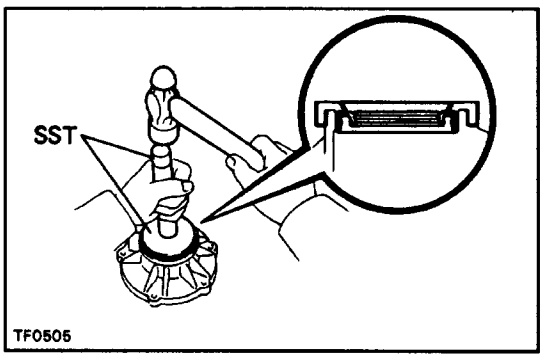

(b) Using SST and a hammer, drive in a new oil seal until its surface is flush with the housing upper surface.
SST 09550–22011 (09550–00020, 09550–00031)

(c) Coat the lip of the oil seal with MP grease.

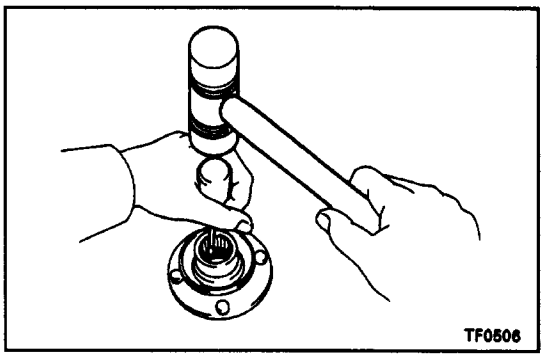

4. IF NECESSARY, REPLACE FRONT AND REAR COMPANION FLANGE OIL SEAL

(a) Using a screwdriver and hammer, drive out the oil seal.

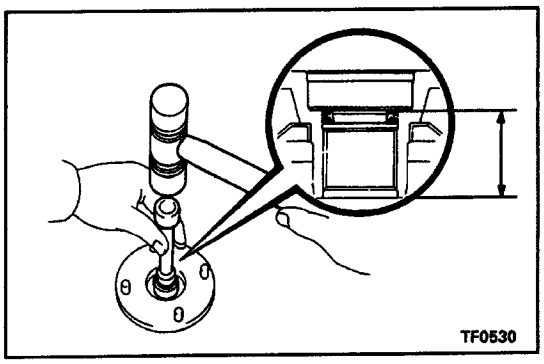

(b) Using a socket wrench and hammer, drive in a new oil seal.

(c) Coat the lip of the oil seal with MP grease.

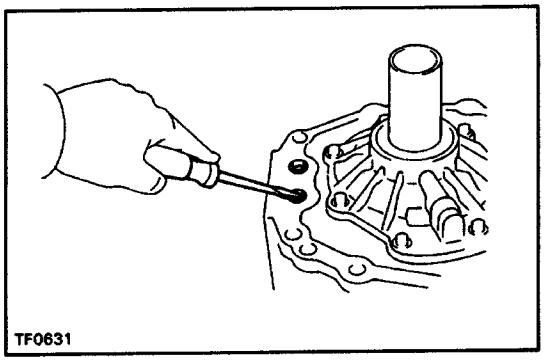

5. 22R–E/G58, A340F:

IF NECESSARY, REPLACE SHIFT FORK SHAFT OIL SEALS

(a) Using a screwdriver, pry out the oil seal.

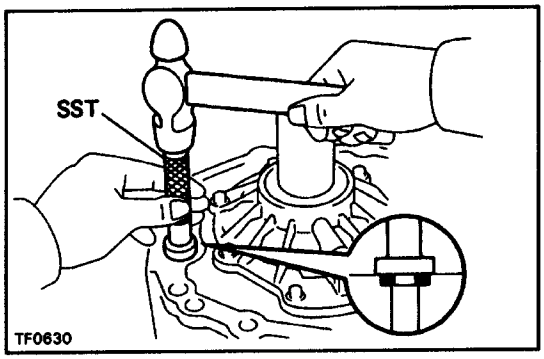

(b) Using SST and a hammer, drive in a new oil seal.

SST 09304–12012

Oil seal depth:

–0.5 ~ 0.5 mm (–0.020 ~ 0.020 in.)

PLANETARY GEAR

COMPONENTS

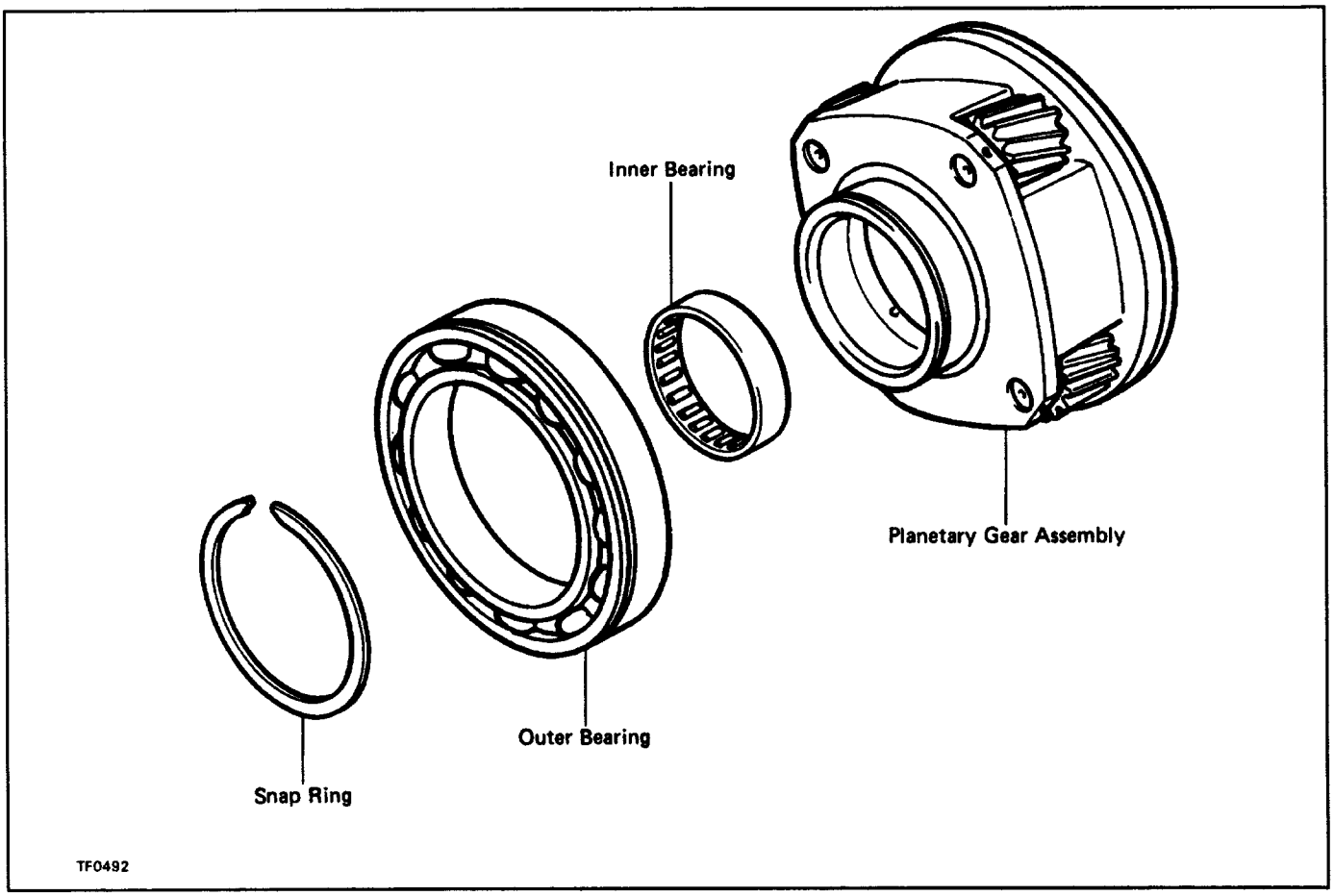

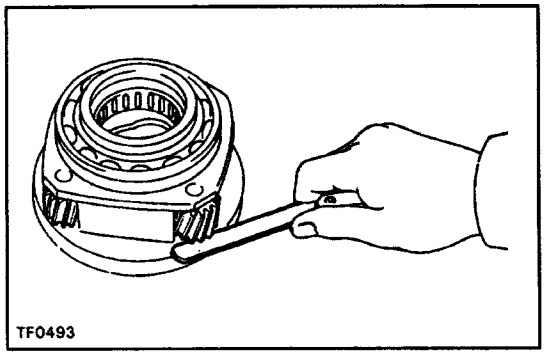

PLANETARY GEAR INSPECTION

1. INSPECT PINION GEAR THRUST CLEARANCE

Using a feeler gauge, measure the planetary pinion gear thrust clearance.

Standard clearance:

0.11 – 0.86 mm (0.0043 – 0.0339 in.)

Maximum clearance:

0.86 mm (0.0339 in.)

If the clearance exceeds the maximum, replace the planetary gear assembly

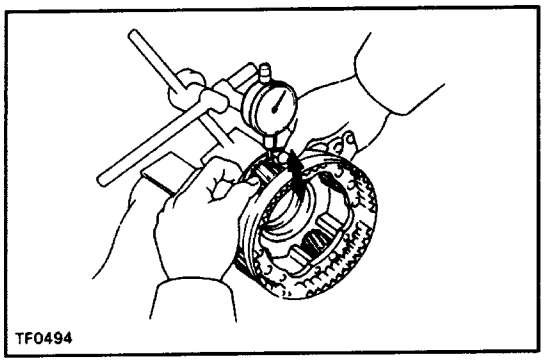
TF0494

2. INSPECT PLANETARY PINION GEAR RADIAL CLE–ARANCE

Using a dial indicator, measure the planetary pinion gear radial clearance.

Standard clearance:

0.009 – 0.038 mm (0.0004 – 0.0015 in.)

Maximum clearance:

0.038 mm (0.0015 in.)

If the clearance exceeds the maximum, replace the planetary gear assembly.

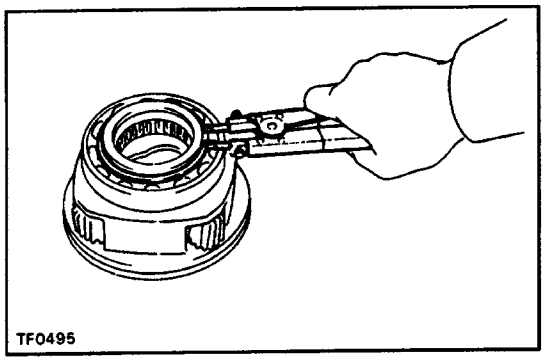
TF0495

3. IF NECESSARY, REPLACE PLANETARY GEAR OUTER BEARING

(a) Using a snap ring expander, remove the snap ring.

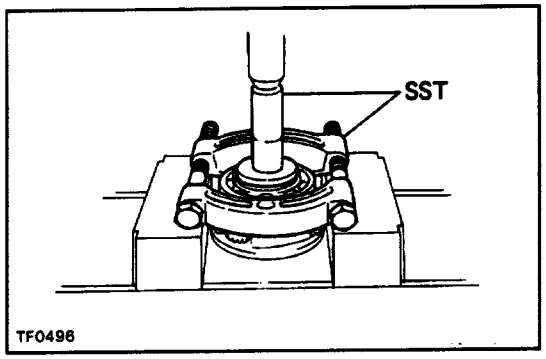

TF0496

(b) Using SST and a press, remove the bearing.
SST 09554 – 30011, 09555 – 55010

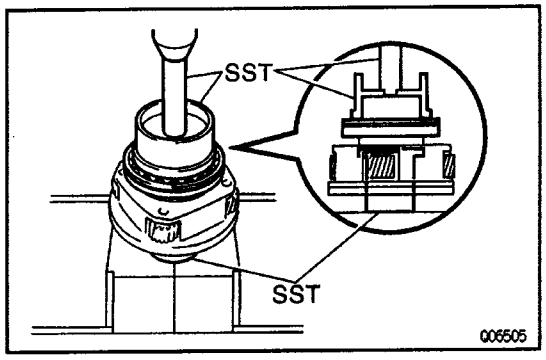

Q06505

(c) Using SST and a press, install a new bearing with the outer race snap ring groove the front.
SST 09223–15020, 09515–30010, 09550–22011 (09550–00020)

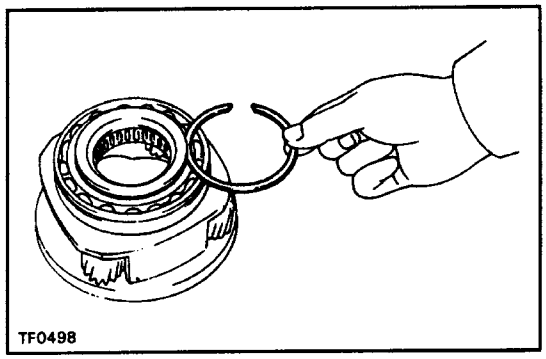
TF0498

(d) Select a snap ring that will allow minimum axial play.

Mark	Thickness mm (in.)
1	1.45 – 1.50 (0.0571 – 0.0591)
2	1.50 – 1.55 (0.0591 – 0.0610)
3	1.55 – 1.60 (0.0610 – 0.0630)
4	1.60 – 1.65 (0.0630 – 0.0650)
5	1.65 – 1.70 (0.0650 – 0.0669)

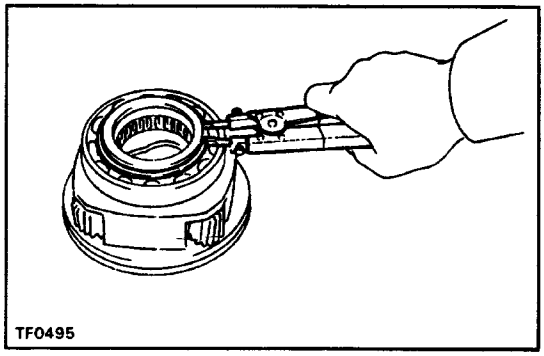

(e) Using a snap ring expander, install the snap ring.

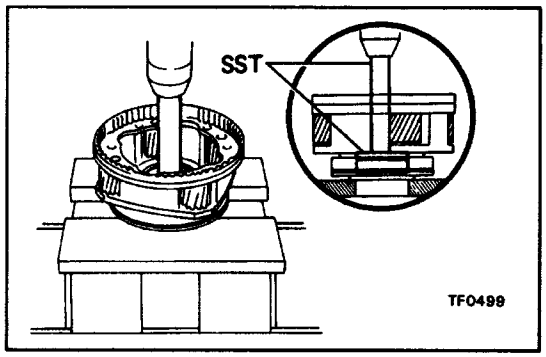

4. IF NECESSARY, REPLACE PLANETARY GEAR INNER BEARING

(a) Using SST and a press, remove the bearing.
SST 09550–10012 (09252–10010, 09557–10010)

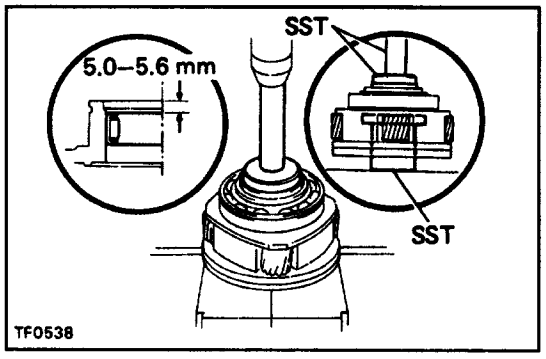

(b) Using SST and a press, install a new bearing.
SST 09550 –10012 (09252 –10010, 09557 –10010), 09515–30010

Bearing depth:
5.0 – 5.6 mm (0.197 – 0.220 in.)

TROUBLESHOOTING

Problem	Possible cause	Remedy	Page
Hard to shift or wilt not shift	Transfer faulty	Disassemble and inspect transfer	TR–4, 7
Transfer jumps out of gear	Transfer faulty	Disassemble and inspect transfer	TR–4, 7

PRECAUTION

When working with FIPG material, you must be observe the following.

- Using a razor blade and gasket scraper, remove all the old packing (FIPG) material from the gasket surfaces.
- Thoroughly clean all components to remove all the loose material.
- Clean both sealing surfaces with a non–residue solvent.
- Apply the seal packing in an approx.1 mm (0.04 in.) wide bead along the sealing surface.
- Parts must be assembled within 10 minutes of application. Otherwise, the packing (FIPG) material must be removed and reapplied.

PREPARATION

SST (SPECIAL SERVICE TOOLS)

	**09223–15020** Oil Seal & Bearing Replacer	
	**09223–22010** Crankshaft Front Oil Seal Replacer	Front retainer oil seal
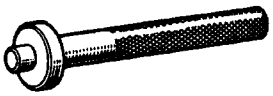	**09304–12012** Input Shaft Front Bearing Replacer	Shift fork shaft oil seal
	**09316–60010** Transmission & Transfer Bearing Replacer	
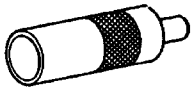	**(09316–00010)** Replacer Pipe	
	**(09316–00070)** Replacer 'F'	
	**09330–00021** Companion Flange Holding Tool	
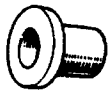	**09515–30010** Rear Wheel Bearing Replacer	Planetary gear outer bearing
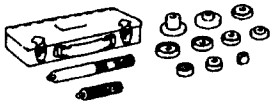	**09550–10012** Replacer Set 'B	
	**(09252–10010)** No. 1 Replacer Handle	
	**(09557–10010)** Differential Drive Pinion Front Bearing Replacer	Planetary gear inner bearing
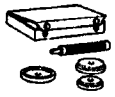	**09550–22011** Rear Axle Bearing & Differential Tool Set	Extension housing oil seal
	**(09550–00020)** Handle	

	(09550–00031) Replacer	
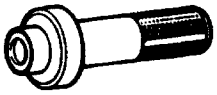	09554–30011 Differential Oil Seal Replacer	Planetary gear outer bearing
	09555–55010 Differential Drive Pinion Bearing Replacer	
	09921–00010 Spring Tension Tool	Oil pump spring seat
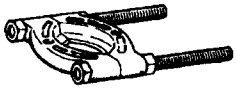	09950–00020 Bearing Remover	
	09950–40010 Puller B Set	

RECOMMENDED TOOLS

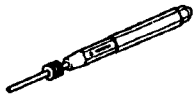	09031–00030 Pin Punch .	
	09905–00012 Snap Ring No.1 Expander.	

EQUIPMENT

Calipers	
Dial indicator	
Micrometer	
Torque wrench	
Feeler gauge	

LUBRICANT

Item	Capacity	Classification
Transfer oil	1.1 liters (1.2 US qts, 1.0 Imp.qts)	API GL–3 or GL–4 or GL–5 SAE 75W–90

SSM (SPECIAL SERVICE MATERIALS)

08826–00090	Seal Packing 1281, THREE BOND 1281 or equivalent (FIPG)	Front case x Rear case Rear companion flange Extension housing x Rear case
08833–00080	Adhesive 1344, THREE BOND 1344. LOCTITE 242 or equivalent	Straight screw plug Extension housing set bolt Front retainer set bolt

REAR OUTPUT SHAFT ASSEMBLY

COMPONENTS

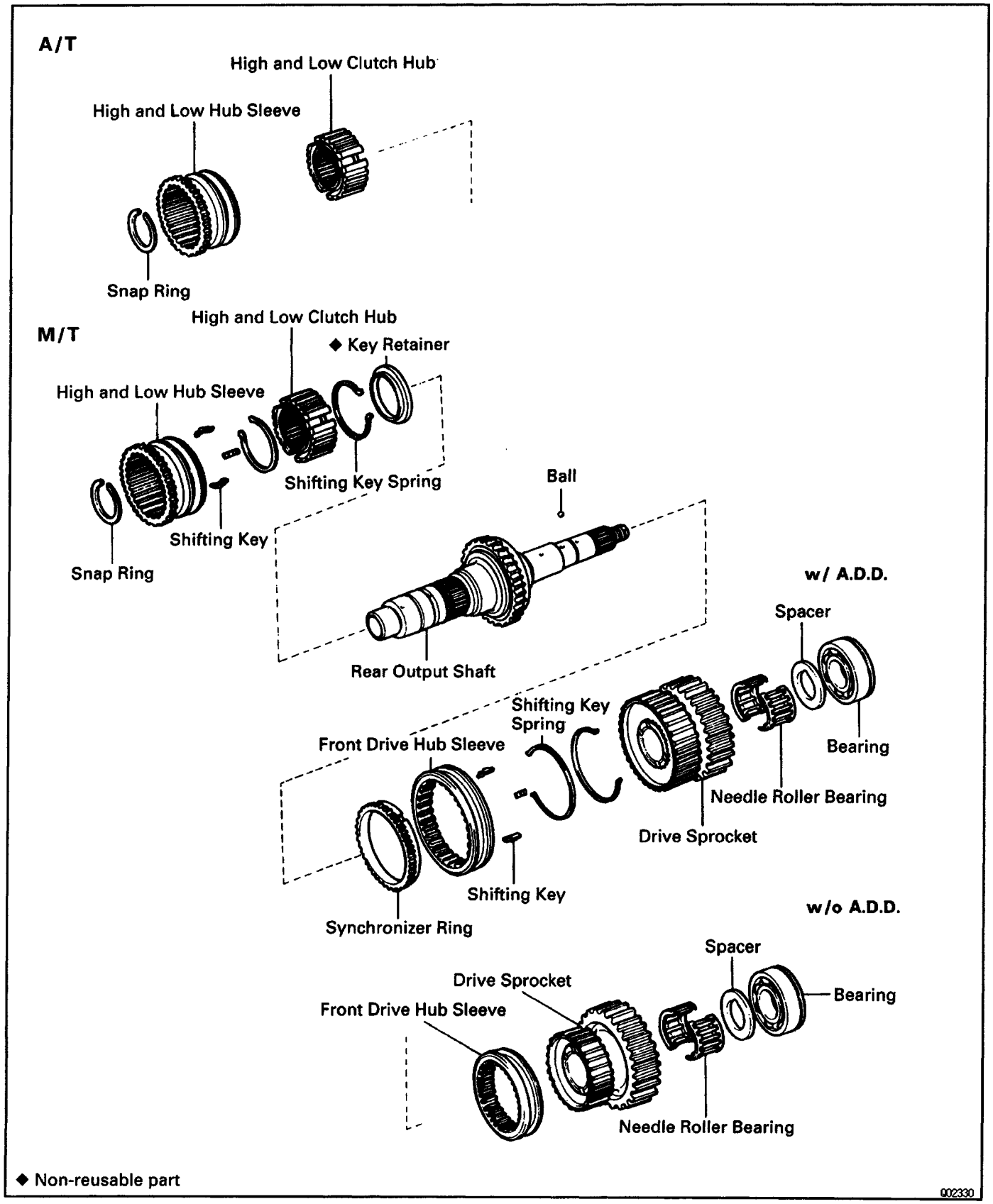

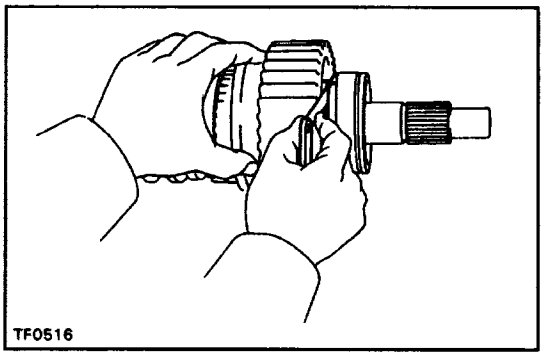
TF0516

REAR OUTPUT SHAFT DISASSEMBLY

1. INSPECT DRIVE SPROCKET THRUST CLEARANCE

Using a feeler gauge, measure the drive sprocket thrust clearance.

Standard clearance:

0.10 – 0.25 mm (0.0039 – 0.0098 in.)

Maximum clearance:

0.25 mm (0.0098 in.)

If the clearance exceeds the maximum, replace the drive sprocket.

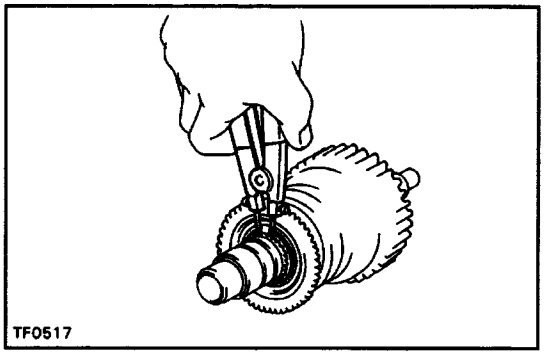
TF0517

2. M/T:

REMOVE HIGH AND LOW HUB SLEEVE ASSEMBLY

(a) Using a snap ring expander, remove the snap ring.
(b) Remove the hub sleeve and 3 shifting keys.
(c) Using a press, remove the clutch hub, key springs and key retainer.

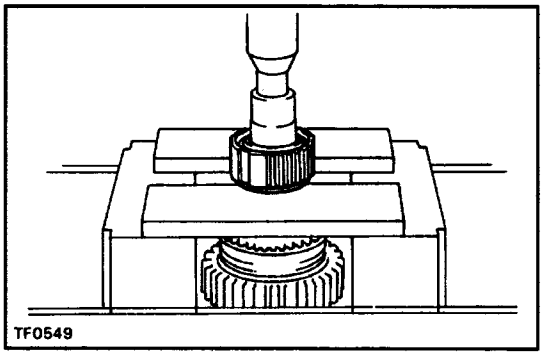
TF0549

3. A/T:

REMOVE HIGH AND LOW HUB SLEEVE ASSEMBLY

(a) Using a snap ring expander, remove the snap ring.
(b) Remove the hub sleeve.
(c) Using a press, remove the clutch hub.

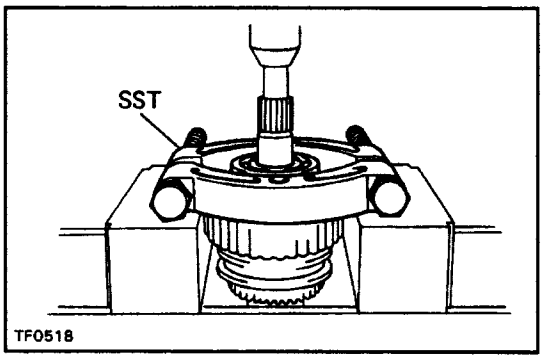

TF0518

4. w/ A. D. D.:

REMOVE REAR BEARING, SPACER AND DRIVE SPROCKET WITH FRONT DRIVE HUB SLEEVE AS–SEMBLY

(a) Using SST and a press, remove the bearing.
SST 09950–00020

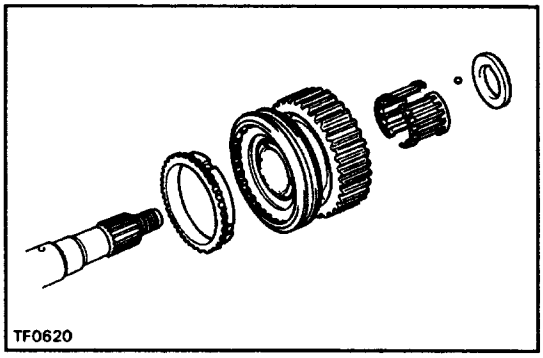
TF0620

(b) Remove the spacer and ball.
(c) Remove the drive sprocket with front drive hub and hub sleeve.
(d) Remove the needle roller bearing.
(e) Remove the synchronizer ring.

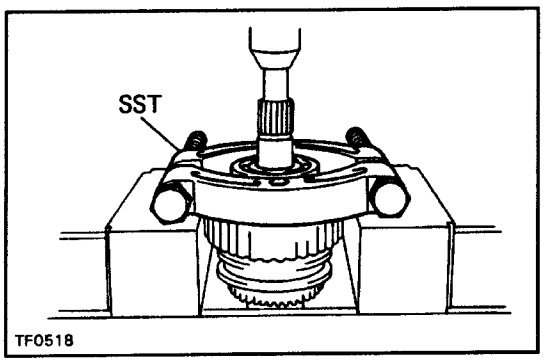

5. w/o A.D.D.:

REMOVE REAR BEARING, SPACER AND DRIVE SPROCKET WITH FRONT DRIVE HUB SLEEVE AS–SEMBLY

(a) Using SST and a press, remove the bearing.
SST 09950–00020

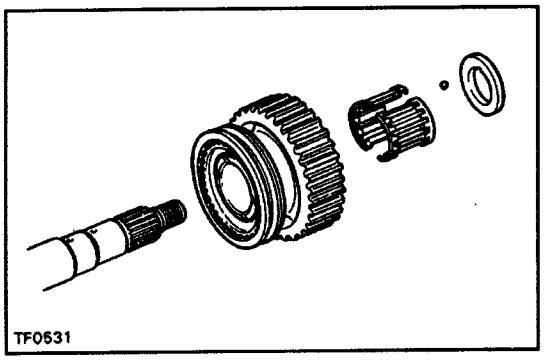

(b) Remove the spacer and ball.
(c) Remove the drive sprocket with front drive hub and hub sleeve.
(d) Remove the needle roller bearing.

6. w/ A.D.D.:

REMOVE SHIFTING KEYS AND KEY SPRINGS FROM FRONT DRIVE HUB ASSEMBLY

Using a screwdriver, remove the 2 shifting key springs and 3 shifting keys.

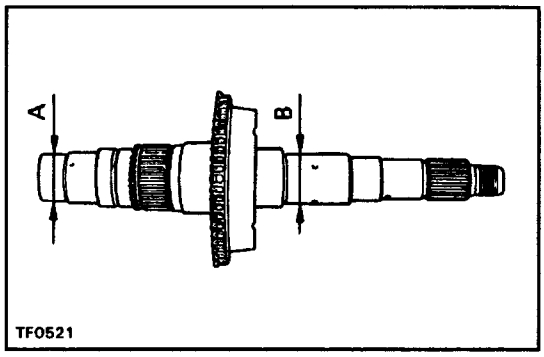

REAR OUTPUT SHAFT INSPECTION

1. INSPECT REAR OUTPUT SHAFT

Using a micrometer, measure the outer diameter of the rear output shaft journal surface.

Minimum diameter:

Part A: 27.98 mm (1.1018 in.)

Part B: 36.98 mm (1.4559 In.)

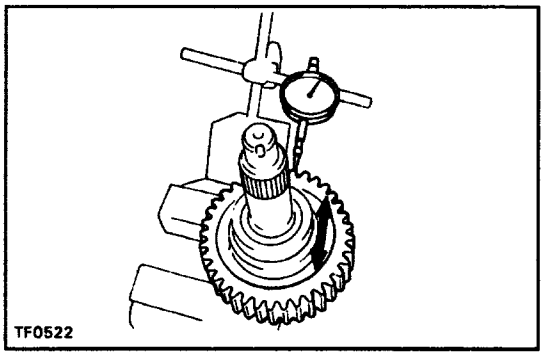

2. INSPECT DRIVE SPROCKET RADIAL CLEARANCE

Using a dial indicator, measure the radial clearance between the sprocket and shaft with the needle roller bearing installed.

Standard clearance:

0.010 – 0.055 mm (0.0004 – 0.0022 in.)

Maximum clearance:

0.055 mm (0.0022 in.)

If the clearance exceeds the maximum, replace the drive sprocket, rear output shaft or needle roller bearing.

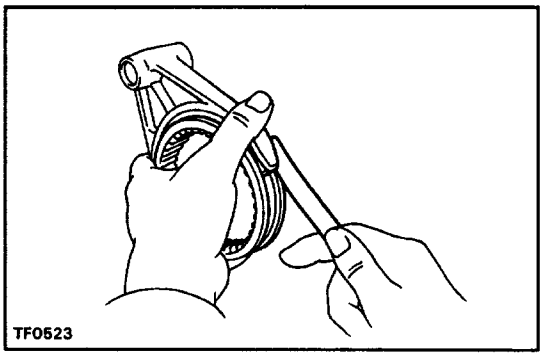

3. INSPECT FRONT DRIVE SHIFT FORK AND HUB SLEEVE CLEARANCE

Using a feeler gauge, measure the clearance between the front drive shift fork and hub sleeve.

Maximum clearance:

1.0 mm (0.039 in.)

If the clearance exceeds the maximum, replace the shift fork or hub sleeve.

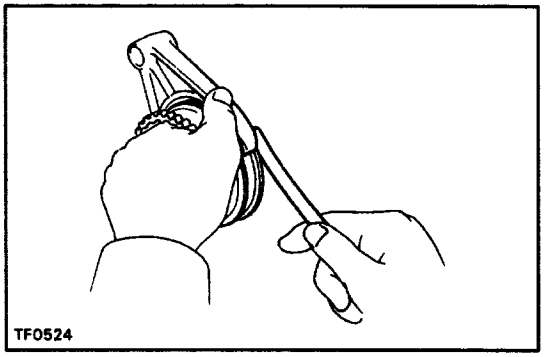

4. INSPECT HIGH AND LOW SHIFT FORK AND HUB SLEEVE CLEARANCE

Using a feeler gauge, measure the clearance between the high and low shift fork and sleeve.

Maximum clearance:

1.0 mm (0.039 in.)

If the clearance exceeds the maximum, replace the shift fork or hub sleeve.

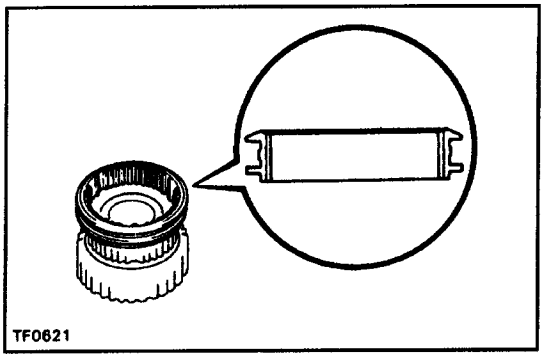
TF0621

REAR OUTPUT SHAFT ASSEMBLY

1. w/ A.D.D.:

INSTALL FRONT DRIVE CLUTCH HUB AND HUB SLEEVE

(a) Install the front drive hub sleeve onto the clutch hub.
HINT: Make sure to install the hub sleeve in the correct direction.

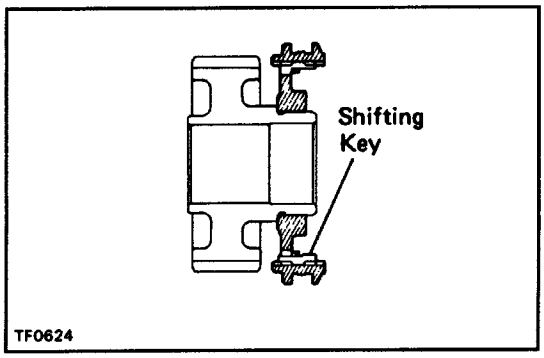

TF0624

(b) Install the shifting keys and springs.
NOTICE: Install the key springs positioned so that their and gaps are not in line.

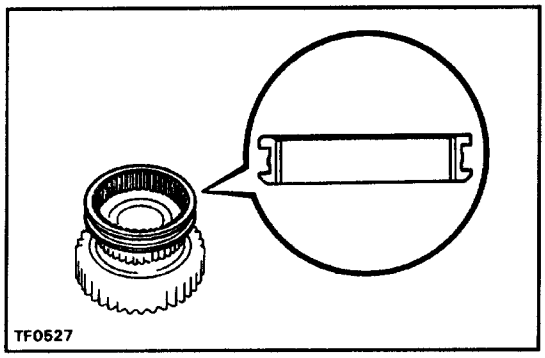
TF0527

2. w/o A.D.D.:

INSTALL FRONT DRIVE CLUTCH HUB AND HUB SLEEVE

Install the front drive hub sleeve onto the clutch hub.
HINT: Make sure to install the hub sleeve in the correct direction.

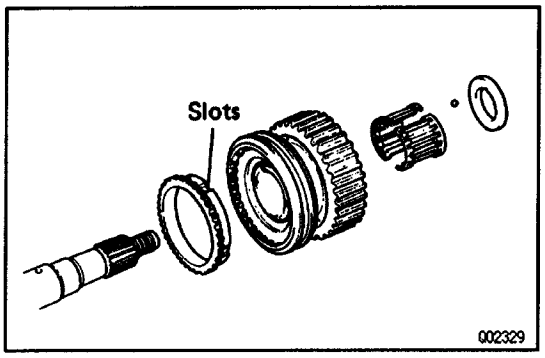

002329

3. w/ A.D.D.:

INSTALL DRIVE SPROCKET WITH FRONT DRIVE HUB SLEEVE ASSEMBLY, SPACER AND REAR BEA–RING

(a) Apply gear oil to the shaft and needle roller bearing.
(b) Install the synchronizer ring.
(c) Install the needle roller bearing in the drive sprocket.
(d) Install the drive sprocket with the front drive hub sleeve.

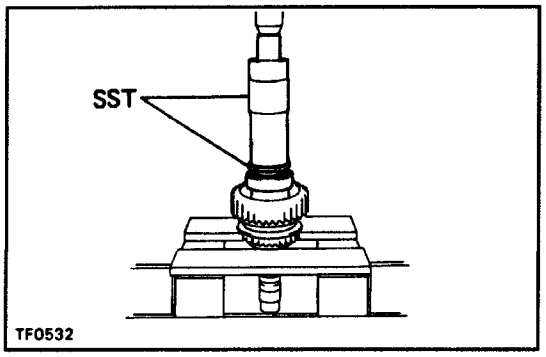

TF0532

(e) Place the synchronizer ring on the gear and align the ring slots with the shifting keys.
(f) Install the spacer to align it with the ball.
(g) Using SST and a press, install the rear bearing with the outer race snap ring groove toward the rear.
SST 09316–60010 (09316–00010, 09316–00070)

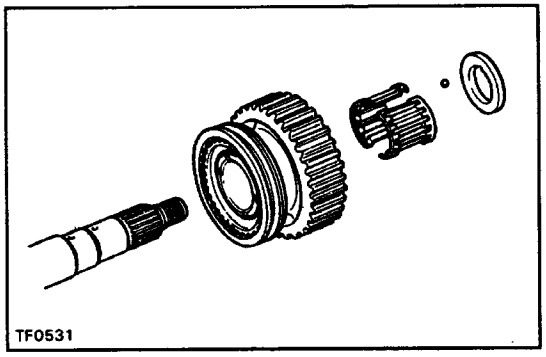

4. w/o A.D.D.:

INSTALL DRIVE SPROCKET WITH FRONT DRIVE HUB SLEEVE ASSEMBLY, SPACER AND REAR BEA–RING

(a) Apply gear oil to the shaft and needle roller bearing.
(b) Install the needle roller bearing in the drive sprocket.
(c) Install the drive sprocket with the front drive hub sleeve.
(d) Install the spacer to align it with the ball.
(e) Using SST and a press, install the rear bearing with the outer race snap ring groove toward the rear.

SST 09316–60010 (09316–00010, 09316–00070)

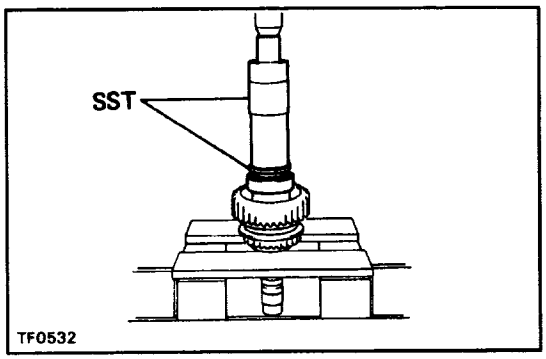

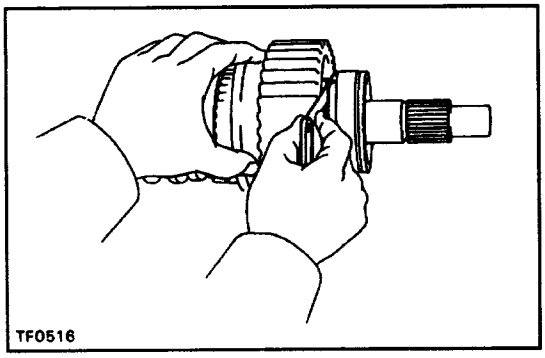

5. INSPECT DRIVE SPROCKET THRUST CLEARANCE

Using a feeler gauge, measure the drive sprocket thrust clearance.

Standard clearance:

0.10 – 0.25 mm (0.0039 – 0.0098 in.)

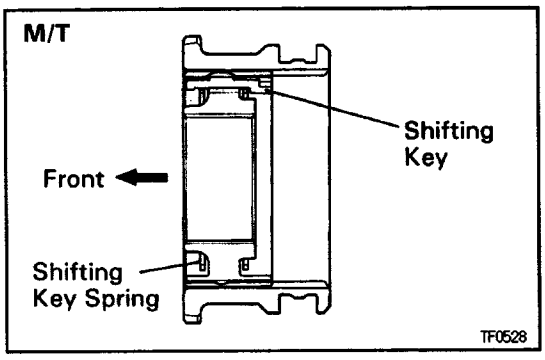

6. M/T:

INSERT HIGH AND LOW CLUTCH HUB INTO HUB SLEEVE

(a) Install the clutch hub and shifting keys to the hub sleeve.
(b) Install the shifting key springs under the shifting keys

NOTICE: Install the key springs positioned so that their end gaps are not in line.

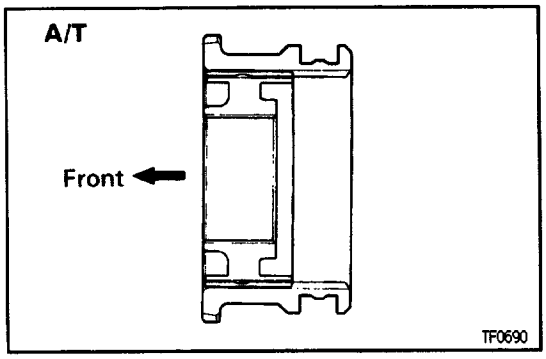

7. A/T:

INSERT HIGH AND LOW CLUTCH HUB INTO HUE SLEEVE

Install the clutch hub to the hub sleeve.

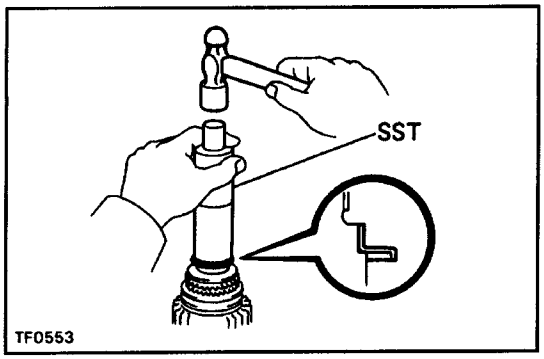

8. M/T:

INSTALL HIGH AND LOW HUB SLEEVE ASSEMBLY

(a) Using SST and a hammer, drive in a new key retainer.
SST 09316–60010 (09316–00010)

NOTICE: Be careful not to deform or damage the key retainer.

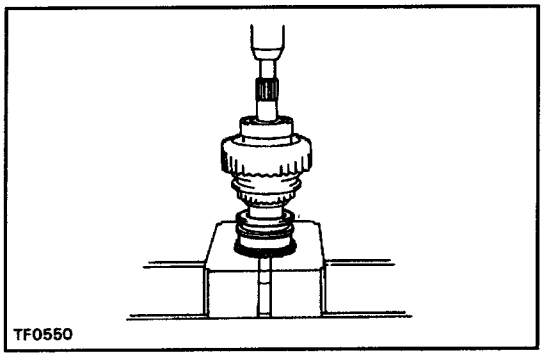

(b) Using a press, install the high and low hub sleeve assembly.

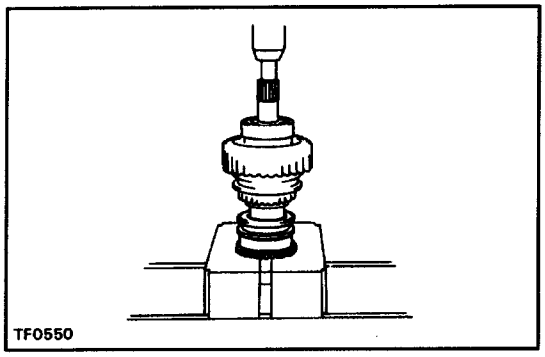

9. A/T:

INSTALL HIGH AND LOW HUB SLEEVE ASSEMBLY

Using a press, install the high and low hub sleeve assembly.

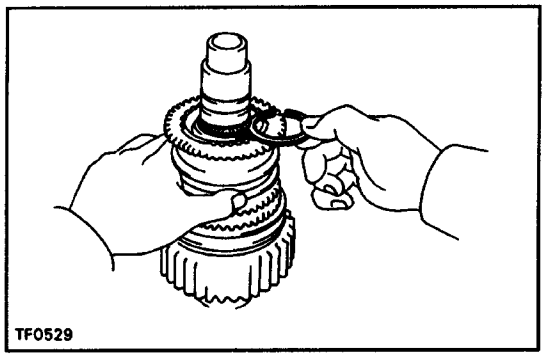

10. INSTALL SNAP RING

(a) Select a snap ring that will allow minimum axial play.

Mark	Thickness mm (in.)
A	2.10 – 2.15 (0.0827 – 0.0846)
B	2.15 – 2.20 (0.0846 – 0.0866)
C	2.20 – 2.25 (0.0866 – 0.0886)
D	2.25 – 2.30 (0.0886 – 0.0906)
E	2.30 – 2.35 (0.0906 – 0.0925)
F	2.35 – 2.40 (0.0925 – 0.0945)
G	2.40 – 2.45 (0.0945 – 0.0965)
H	2.45 – 2.50 (0.0965 – 0.0984)
J	2.50 – 2.55 (0.0984 – 0.1004)
K	2.00 – 2.05 (0.0787 – 0.0807)
L	2.05 – 2.10 (0.0807 – 0.0827)

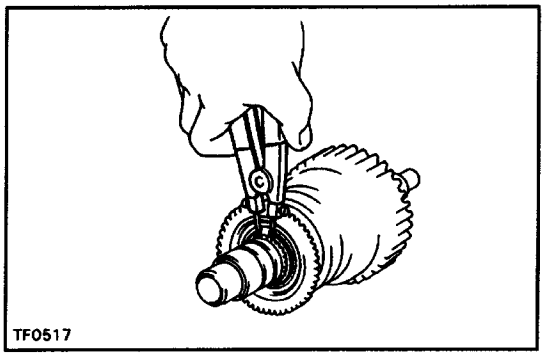

(b) Using a snap ring expander, install the snap ring.

SERVICE SPECIFICATIONS

SERVICE DATA

Oil pump body	Body clearance	STD	0.10 – 0.16 mm	0.0039 – 0.0063 in.
		Max	0.16 mm	0.0063 in.
	Tip clearance	STD	0.08 – 0.16 mm	0.0031 – 0.0063 in.
		Max	0.16 mm	0.0063 in.
	Side clearance	STD	0.03 – 0.08 mm	0.0012 – 0.0031 in.
		Max	0.08 mm	0.0031 in.
Rear output shaft assembly	Drive sprocket thrust clearance	STD	0.10 – 0.25 mm	0.0039 – 0.0098 in.
		Max	0.25 mm	0.0098 in.
	Driven sprocket radial clearance	STD	0.010 – 0.055 mm	0.0004 – 0.0022 in.
		Max	0.055 mm	0.0022 in.
	Rear output shaft journal diameter			
	Part A	Min	27.98 mm	1.1016 in.
	Part B	Min	36.98 mm	1.4559 in.
	Front drive shift fork to hub sleeve clearance	Max	1.0 mm	0.039 in.
	High and low shift fork to hub sleeve clearance	Max	1.0 mm	0.039 in.
	Rear output shaft snap ring thickness	Mark		
		A	2.10 – 2.15 mm	0.0827 – 0.0846 in.
		B	2.15 – 2.20 mm	0.0846 – 0.0866 in.
		C	2.20 – 2.25 mm	0.0866 – 0.0886 in.
		D	2.25 – 2.30 mm	0.0886 – 0.0906 in.
		E	2.30 – 2.35 mm	0.0906 – 0.0925 in.
		F	2.35 – 2.40 mm	0.0925 – 0.0945 in.
		G	2.40 – 2.45 mm	0.0945 – 0.0965 in.
		H	2.45 – 2.50 mm	0.0965 – 0.0984 in.
		J	2.50 – 2.55 mm	0.0984 – 0.1004 in.
		K	2.00 – 2.05 mm	0.0787 – 0.0807 in.
		L	2.05 – 2.10 mm	0.0807 – 0.0827 in.

Input shaft	Input shaft journal outer diameter			
		Min	47.59 mm	1.8736 in.
	Input shaft bushing diameter	Max	39.14 mm	1.5409 in.
	Synchronizer ring to sprocket clearance			
		STD	1.15 – 1.85 mm	0.0453 – 0.0728 in.
		Min	0.8 mm	0.031 in.
	Input shaft snap ring thickness	Mark		
		A	2.10 – 2.15 mm	0.0827 – 0.0846 in.
		B	2.15 – 2.20 mm	0.0846 – 0.0866 in.
		C	2.20 – 2.25 mm	0.0866 – 0.0886 in.
		D	2.25 – 2.30 mm	0.0886 – 0.0906 in.
		E	2.30 – 2.35 mm	0.0906 – 0.0925 in.
		F	2.35 – 2.40 mm	0.0925 – 0.0945 in.
		G	2.40 – 2.45 mm	0.0945 – 0.0965 in.
		H	2.45 – 2.50 mm	0.0965 – 0.0984 in.
		J	2.50 – 2.55 mm	0.0984 – 0.1004 in.
		K	2.55 – 2.60 mm	0.1004 – 0.1024 in.
		L	2.60 – 2.65 mm	0.1024 – 0.1043 in.
		M	2.65 – 2.70 mm	0.1043 – 0.1063 in.
		N	2.70 – 2.75 mm	0.1063 – 0.1083 in.
		P	2.75 – 2.80 mm	0.1083 – 0.1102 in.
		Q	2.80 – 2.85 mm	0.1102 – 0.1122 in.
		R	2.85 – 2.90 mm	0.1122 – 0.1142 in.
		S	2.90 – 2.95 mm	0.1142 – 0.1161 in.
		T	2.95 – 3.00 mm	0.1161 – 0.1181 in.
		U	3.00 – 3.05 mm	0.1181 – 0.1201 in.
Planetary gear	Pinion gear thrust clearance	STD	0.11 – 0.86 mm	0.0043 – 0.0339 in.
		Max	0.86 mm	0.0339 in.
	Pinion gear radial clearance	STD	0.009 – 0.038 mm	0.0004 – 0.0015 in.
		Max	0.038 mm	0.0015 in.
	Outer bearing snap ring thickness			
		Mark		
		1	1.45 – 1.50 mm	0.0571 – 0.0591 in.
		2	1.50 – 1.55 mm	0.0591 – 0.0610 in.
		3	1.55 – 1.60 mm	0.0610 – 0.0630 in.
		4	1.60 – 1.65 mm	0.0630 – 0.0650 in.
		5	1.65 – 1.70 mm	0.0650 – 0.0669 in.
	Inner bearing depth		5.0 – 5.6 mm	0.197 – 0.220 in.
Oil seal	Speedometer driven gear oil seal depth		25 mm	0.98 in.
	Shift fork shaft oil seal depth		−0.5 ~ 0.5 mm	−0.020 ~ 0.020 in.

TORQUE SPECIFICATIONS

Part tightened	N·m	kgf·cm	ft·lbf
Oil pump plate	7.4	75	65 in.·lbf
Straight screw plug for oil pump body	29	300	22
Straight screw plug for ring gear	19	190	14
Oil pump body x Front case	11	115	8
Separator with oil strainer	18	185	13
Straight screw plug for shift fork shaft	19	190	14
Front case x Rear case	37	380	27
Extension housing	11	115	8
Companion flange lock nut	118	1,200	87
Control retainer or upper cover	18	185	13
Front retainer	11	115	8
Transfer indicator switch	37	380	27
No.1 speed sensor	11	115	8
Transfer assembly x Transmission	37	380	27
Transfer L4 position switch	37	380	27

TORQUE SPECIFICATIONS (Transfer Installation)

Part tightened	N·m	kgf·cm	ft·lbf
Transfer x Transfer adaptor	37	380	27
Engine rear mounting	40	400	29
Transfer x Dynamic damper	37	380	27

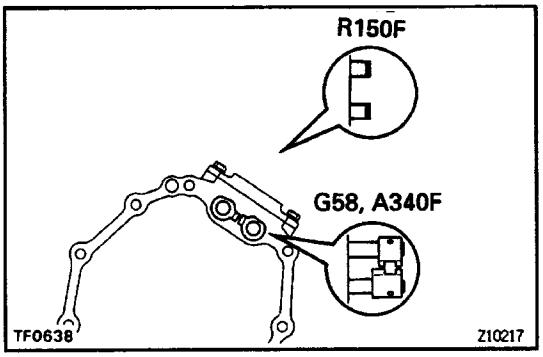

TRANSFER INSTALLATION

1. INSTALL TRANSFER AND PROPELLER SHAFT UPPER DUST COVER TO TRANSMISSION WITH NEW GASKET

(a) Shift the 2 shift fork shafts to the high–4 position.

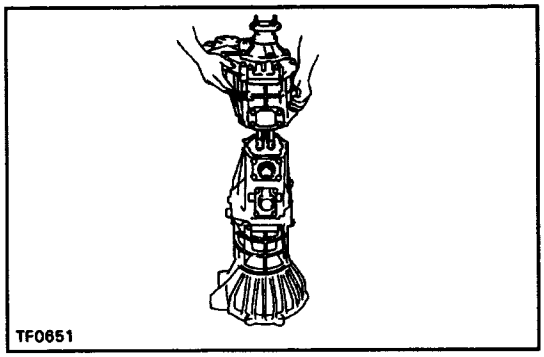

(b) Apply MP grease to the adaptor oil seal.
(c) Place a new gasket to the transfer adaptor.
(d) Install the transfer to the transmission.
HINT: Take care not to damage the oil seal by the input gear spline when installing the transfer.

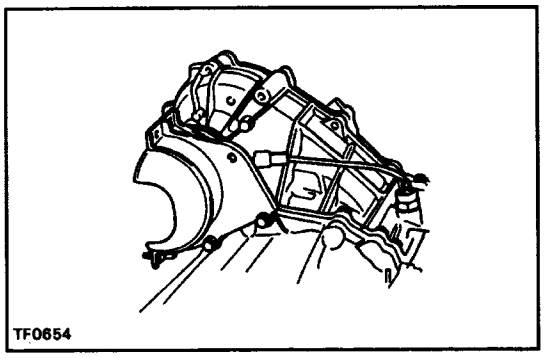

(e) Install and torque the bolts with the propeller shaft upper dust cover.
Torque: 37 N–m (380 kgf–cm, 27 ft–lbf)
(f) install the dust cover bolt to the bracket.
Torque: 23 N–m (230 kgf–cm, 17 ft–lbf)

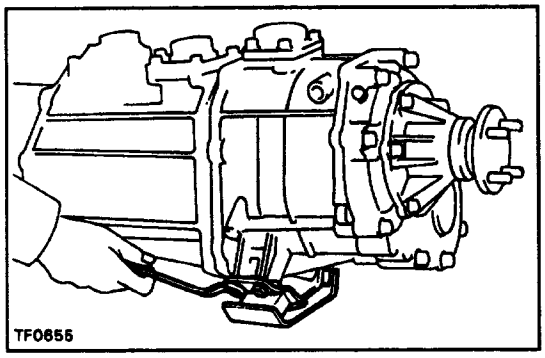

2. INSTALL ENGINE REAR MOUNTING
Torque: 40 N–m (400 kgf–cm, 29 ft–lbf)

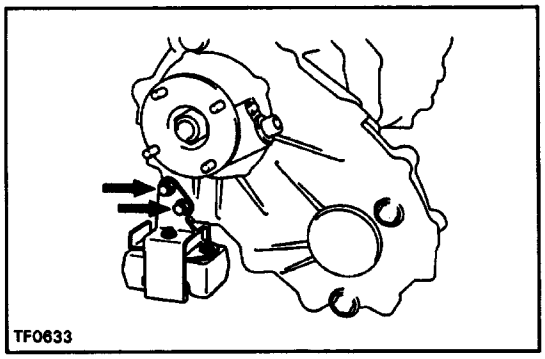

3. INSTALL DYNAMIC DAMPER
Torque: 37 N–m (380 kgf–cm, 27 ft–lbf)

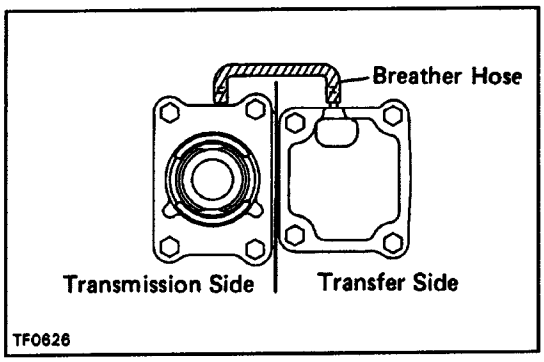

4. 22R–E/G58 AND A340F:

INSTALL BREATHER HOSE

Connect the breather hose for transfer upper cover and transmission control retainer as shown.

Hose depth:

13 mm (0.51 in.)

5. INSTALL TRANSFER WITH TRANSMISSION

M/T – See pages G58 MT1–11, R150F MT2–12.

A/T – See pages AT1–72.

6. FILL TRANSMISSION AND TRANSFER WITH OIL

M/T – See pages G58 MT1–14, R150F MT2–15.

A/T – See page AT1–24.

7. PERFORM ROAD TEST

Check for abnormal noise and smooth operation.

TRANSFER ASSEMBLY

(See pages TR–10 and TR–11)

1. INSTALL PLANETARY RING GEAR

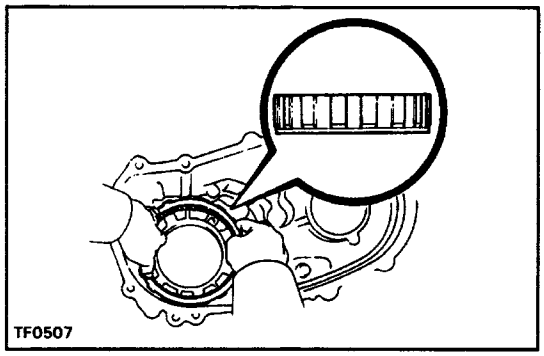

(a) Install the planetary ring gear to the front case.
HINT: Make sure to install the ring gear in the correct direction.

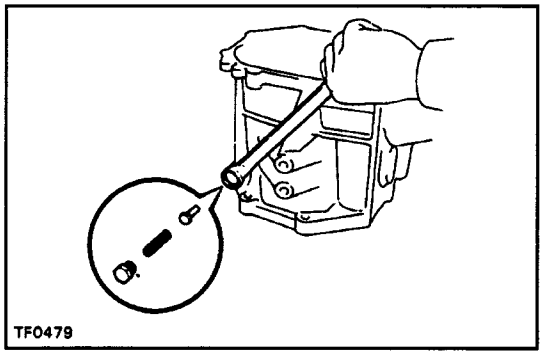

(b) Install the pin and spring.
(c) Apply liquid sealer to the plug.
Sealant: Part No. 08833–00080, THREE BOND 1344, LOCTITE 242 or equivalent
(d) Install and torque the plug.
Torque: 19 N–m (190 kgf–cm, 14 ft–lbf)

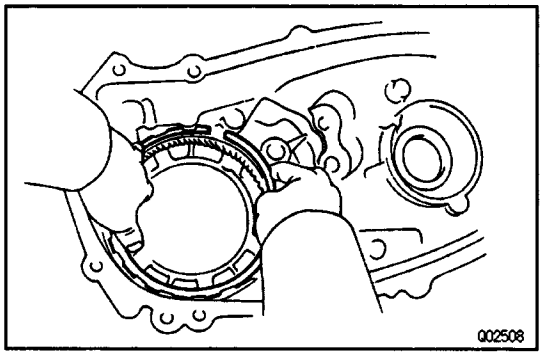

(e) Install the snap ring.
HINT: Be sure the end gap of the snap ring is not aligned with the upper side of the case.

2. INSTALL INPUT SHAFT TO PLANETARY GEAR ASSEMBLY

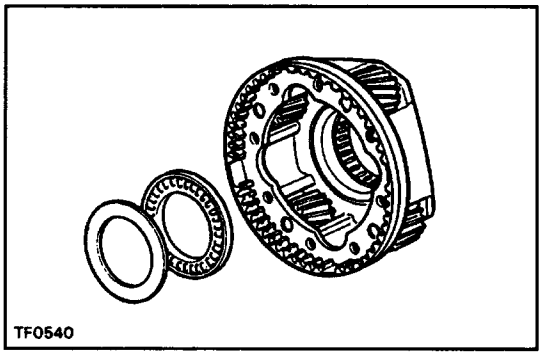

(a) Apply gear oil to the thrust bearing and race.
(b) Install the race and thrust bearing.

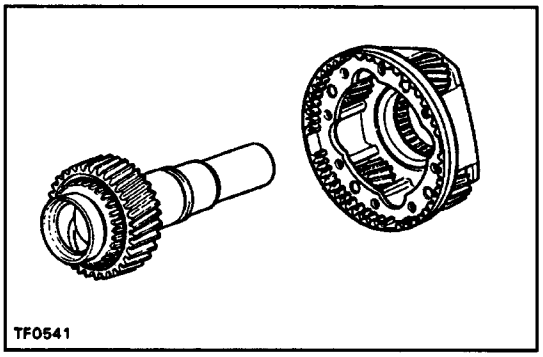

(c) Install the input shaft into the planetary gear assembly.

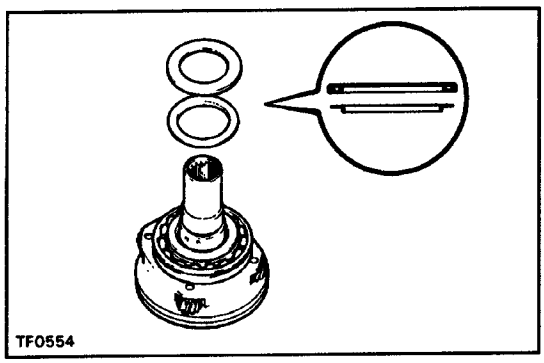
TF0554

3. INSTALL THRUST BEARING AND INPUT SHAFT STOPPER

(a) Apply gear oil to the thrust bearing and race.
(b) Install the race and thrust bearing.

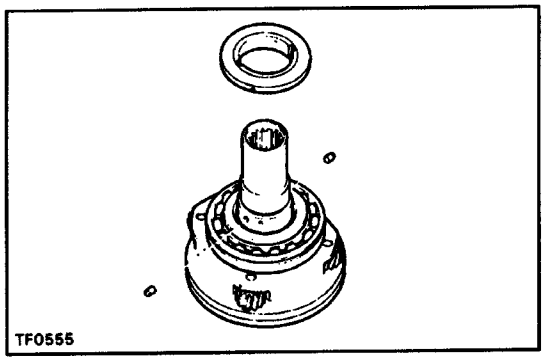
TF0555

(c) Install the 2 pins onto the input shaft.
(d) Install the input shaft stopper.

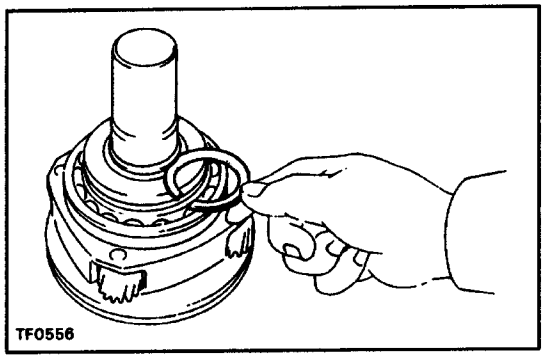
TF0556

4. INSTALL SNAP RING

(a) Select a snap ring that will allow 0.05 – 0.15 mm (0.0020 – 0.0059 in.) axial play.

Mark	Thickness mm (in.)	Mark	Thickness mm (in.)
A	2.10 – 2.15 (0.0827 – 0.0846)	L	2.60 – 2.65 (0.1024 – 0.1043)
B	2.15 – 2.20 (0.0846 – 0.0866)	M	2.65 – 2.70 (0.1043 – 0.1063)
C	2.20 – 2.25 (0.0866 – 0.0886)	N	2.70 – 2.75 (0.1063 – 0.1083)
D	2.25 – 2.30 (0.0886 – 0.0906)	P	2.75 – 2.80 (0.1083 – 0.1102)
E	2.30 – 2.35 (0.0906 – 0.0925)	Q	2.80 – 2.85 (0.1102 – 0.1122)
F	2.35 – 2.40 (0.0925 – 0.0945)	R	2.85 – 2.90 (0.1122 – 0.1142)
G	2.40 – 2.45 (0.0945 – 0.0965)	S	2.90 – 2.95 (0.1142 – 0.1161)
H	2.45 – 2.50 (0.0965 – 0.0984)	T	2.95 – 3.00 (0.1161 – 0.1181)
J	2.50 – 2.55 (0.0984 – 0.1004)	U	3.00 – 3.05 (0.1181 – 0.1201)
K	2.55 – 2.60 (0.1004 – 0.1024)		

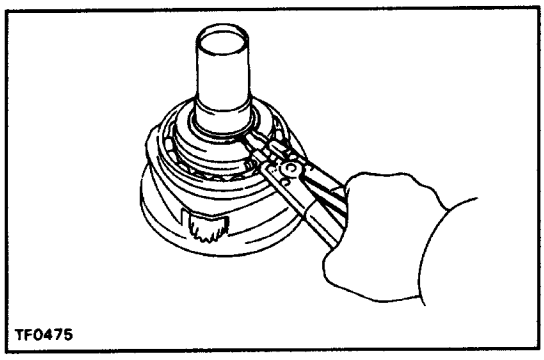
TF0475

(b) Using a snap ring expander, install the snap ring.

5. INSTALL NEEDLE ROLLER BEARING INTO INPUT SHAFT

(a) Apply gear oil to the needle roller bearing.
(b) Install the needle roller bearing into the input shaft.

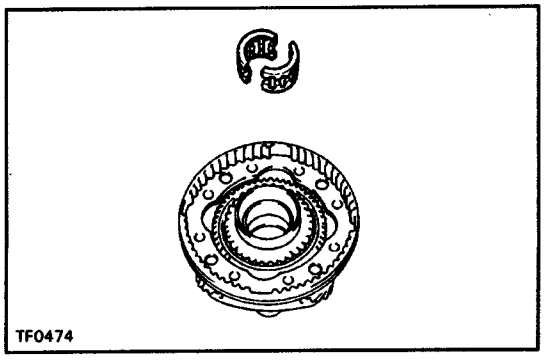
TF0474

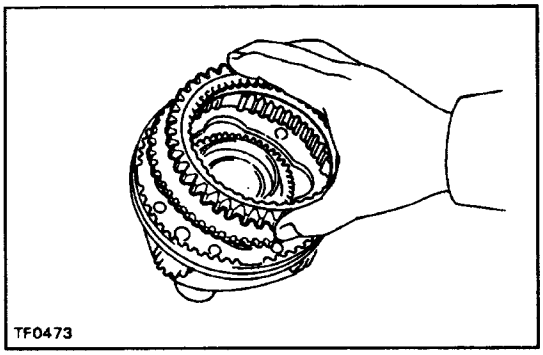

6. INSTALL LOW GEAR SPLINE PIECE

(a) Install the low gear spline piece to the planetary carrier.

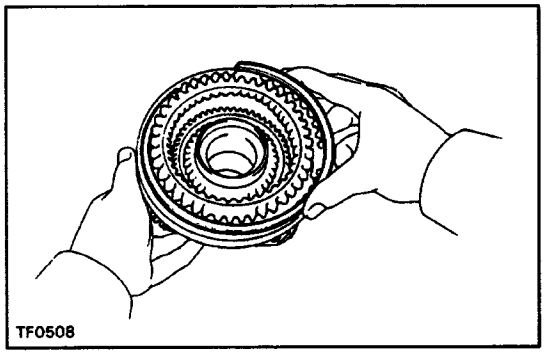

(b) Install the snap ring.

HINT: Be sure the end gap of the snap ring is not aligned with cutout portion of the planetary carrier.

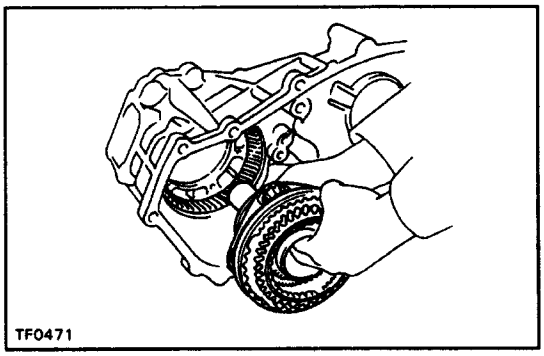

7. INSTALL PLANETARY GEAR ASSEMBLY TO FRONT CASE

(a) Install the planetary gear assembly with the input shaft.

HINT: If necessary, heat the front case to about 70˚C (158˚F).

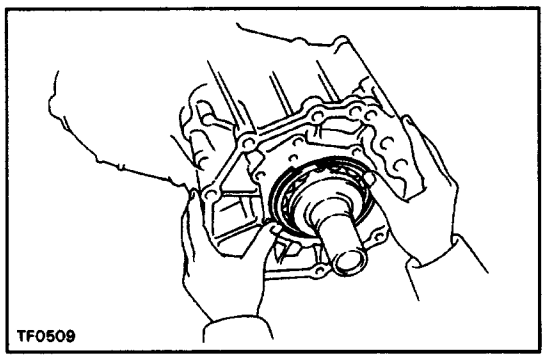

(b) Install the snap ring.

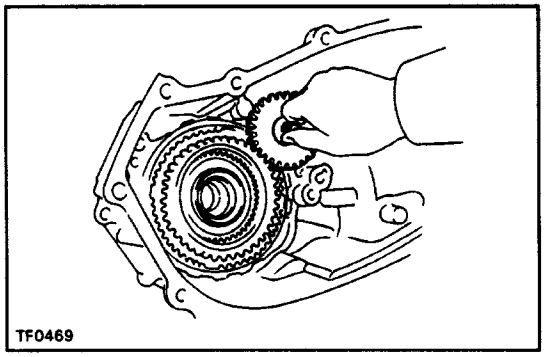

8. INSTALL OIL PUMP DRIVE GEAR

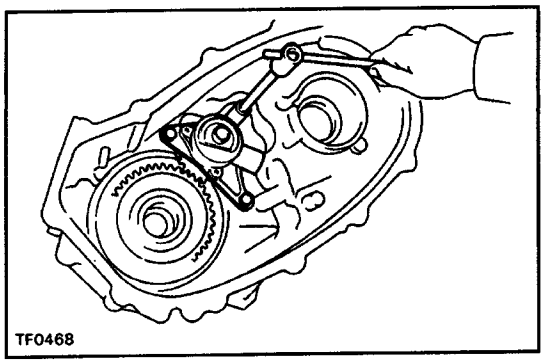

9. INSTALL OIL PUMP BODY ASSEMBLY

(a) Install the oil pump body assembly.

(b) Install and torque the 3 bolts.

Torque: 11 N–m (115 kgf–cm, 8 ft–lbf)

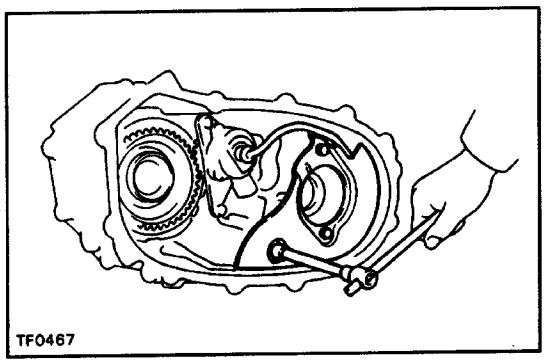

10. INSTALL SEPARATOR WITH OIL STRAINER

(a) Coat a new O–ring with gear oil and install it to the oil strainer pipe.

(b) Install the separator with the oil strainer.

(c) Install and torque the 3 bolts.

Torque: 18 N–m (185 kgf–cm, 13 ft–lbf)

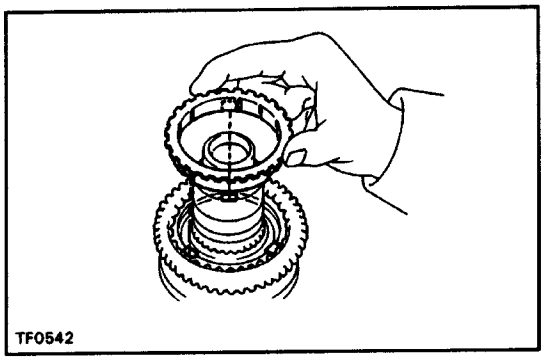

11. INSTALL REAR OUTPUT SHAFT, DRIVEN SPROCKET AND CHAIN

(a) Apply MP grease to the synchronizer ring (for M/T).

(b) Align the synchronizer ring slots with the shifting keys, and install it on the high and low clutch hub.

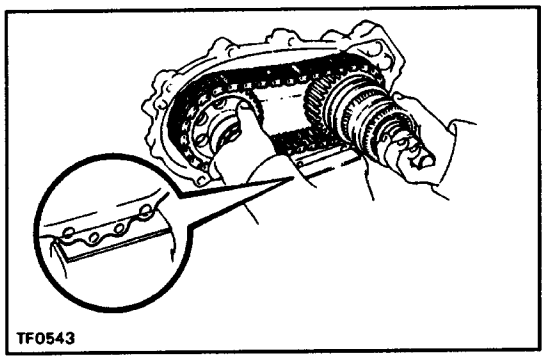

(c) Assembly the rear output shaft, driven sprocket and chain.

(d) Mount the rear case in the vise.

NOTICE: Be careful not to damage the sealing surface.

(e) Using a plastic hammer, tap the rear case while pushing on the rear output shaft and driven sprocket.
HINT: If necessary, heat the rear case to about 70°C (158°F).

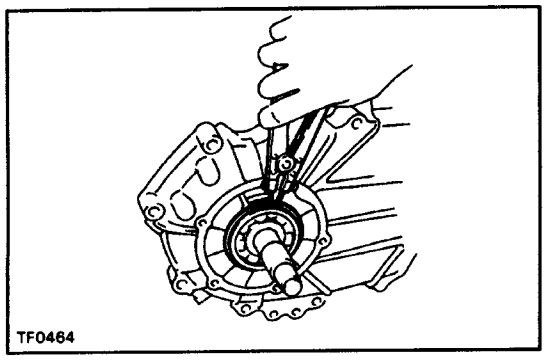

(f) Using a snap ring expander, install the snap ring.

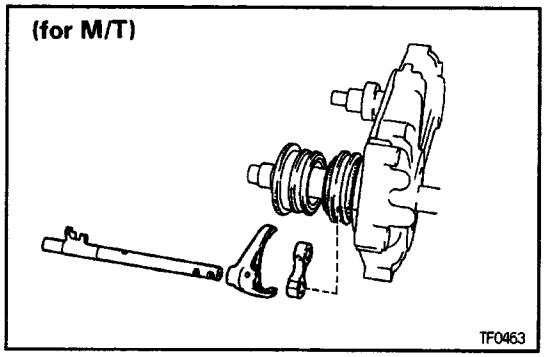

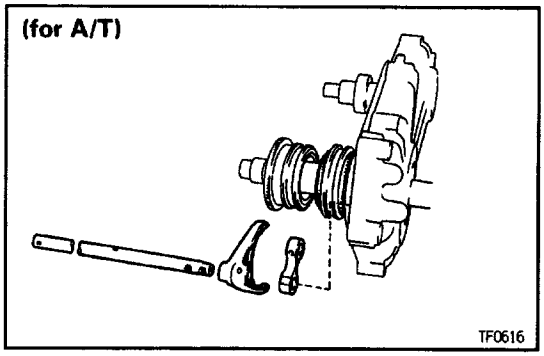

12. INSTALL HIGH AND LOW FORK SHAFT, FORK AND STOPPER

(a) Place the high and low shift fork into the groove of the hub sleeve.

HINT: Make sure to install the shift fork in the correct direction.

(b) Install the fork shaft to the rear case through the shift fork and stopper.

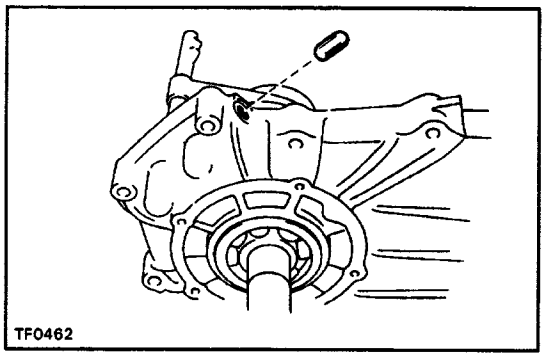

13. INSTALL FRONT DRIVE FORK SHAFT, FORK AND SPRING

(a) Apply gear oil to the straight pin, and install it into the case hole.

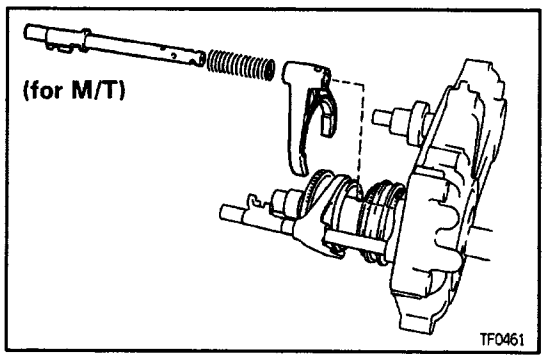

(b) Place the front drive shift fork into the groove of the hub sleeve.

HINT: Make sure to install the shift fork in the correct direction.

(c) Install the spring to the fork shaft.

(d) Install the fork shaft to the rear case through the shift fork and stopper.

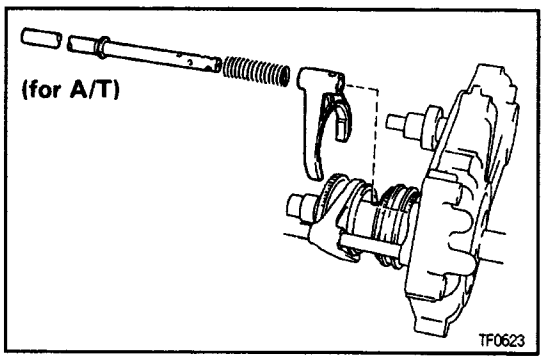

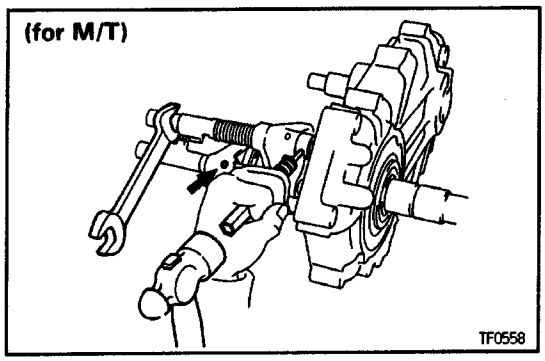

(e) Using a pin punch and hammer, drive in the 2 slotted spring pins.

HINT: when installing the pin in the front drive fork shaft, push the shaft towards the rear case and install the pin while the spring is compressed.

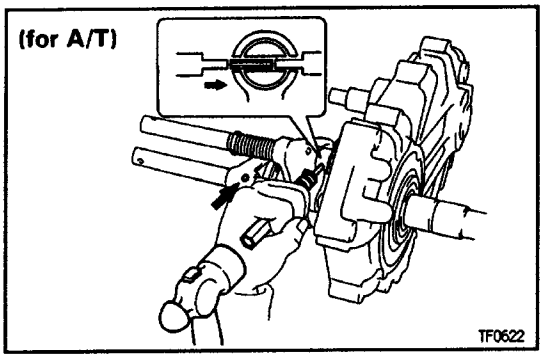

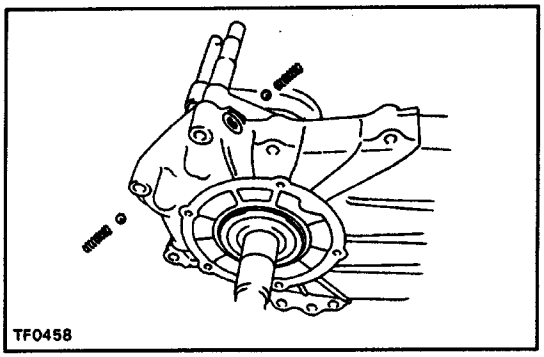

14. INSTALL STRAIGHT SCREW PLUGS, SPRINGS AND LOCKING BALLS

(a) Install the ball and spring into the both holes.

(b) Apply liquid sealer to the plugs.

Sealant: Part No. 08833–00080. THREE BOND 1344, LOCTITE 242 or equivalent

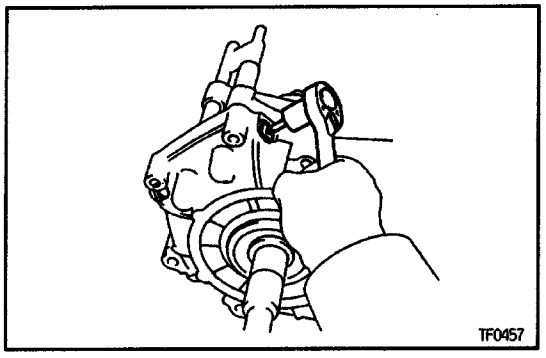

(c) Using a hexagon wrench, install and torque the 2 screws.

Torque: 19 N–m (190 kgf–cm, 14 ft–lbf)

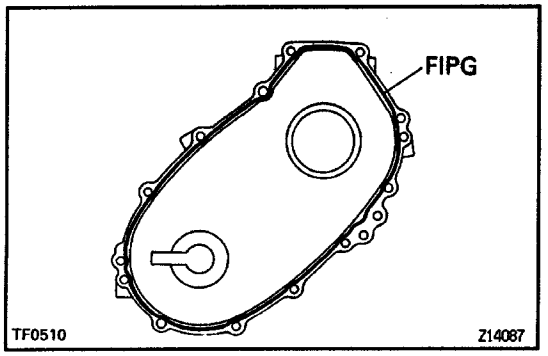

15. ASSEMBLE FRONT CASE AND REAR CASE

(a) Apply FIPG to the rear case, as shown.

FIPG:

Part No. 08826–00090, THREE BOND 1281 or equivalent

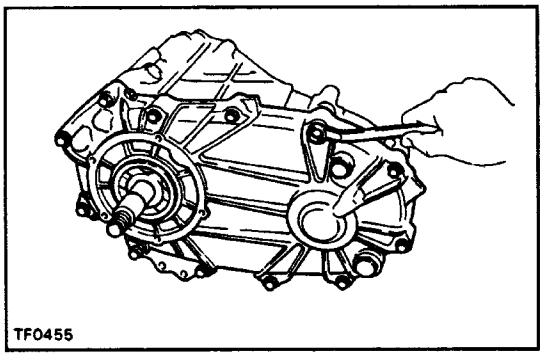
TF0455

(b) Shift the high and low hub sleeve to low side (rear side).
(c) Assemble the front case and rear case.
(d) Install and torque the 12 bolts.
Torque: 37 N–m (380 kgf–cm, 27 ft–lbf)

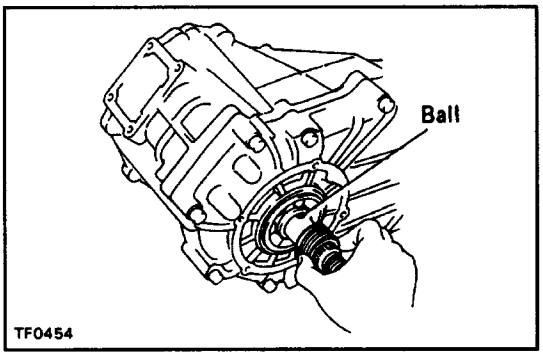

TF0454

16. INSTALL SPEEDOMETER DRIVE GEAR
(a) Install the ball on the rear output shaft.
(b) Install the speedometer drive gear.
HINT: Make sure to install the speedometer drive gear in the correct direction.

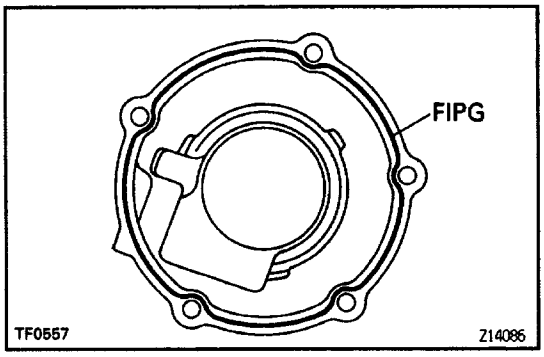

TF0557 Z14086

17. INSTALL EXTENSION HOUSING
(a) Apply FIPG to the extension housing, as shown.
FIPG:
Part No. 08826–00090, THREE BOND 1281 or equivalent

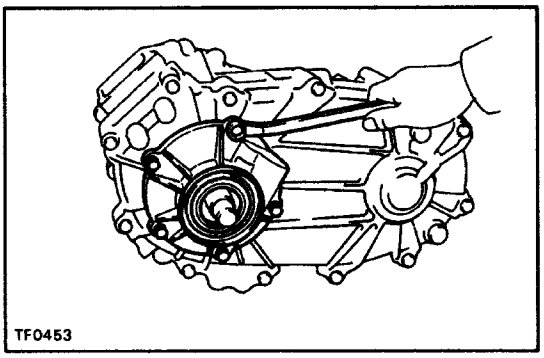
TF0453

(b) Install the extension housing to the rear case.
(c) Apply liquid sealer to the bolts.
Sealant: Part No. 08833–00080, THREE BOND 1344, LOCTITE 242 or equivalent
(d) Install and torque the 5 bolts.
Torque: 11 N–m (115 kgf–cm. 8 ft–lbf)

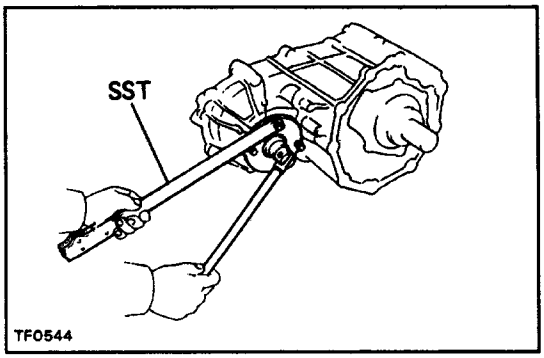

TF0544

18. INSTALL FRONT COMPANION FLANGE
HINT: Front companion flange bolts are silver.
(a) Apply gear oil to the companion flange inner surface.
(b) Install the front companion flange to the driven sprocket shaft.
(c) Using SST to hold the flange, install the companion flange lock nut.
SST 09330–00021
Torque: 118 N .m (1,200 kgf–cm, 87 ft–lbf)

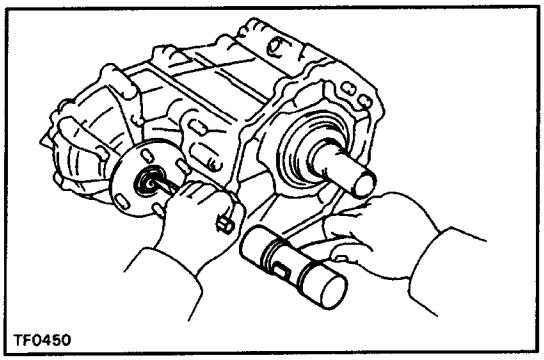

19. INSTALL REAR COMPANION FLANGE

HINT: Rear companion flange bolts are black.

(a) Install the rear companion flange in the same way as the front companion flange.

(b) Stake the lock nut.

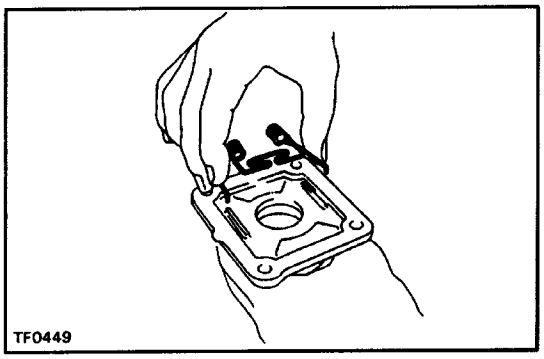

20. 3VZ – E/R150F

INSTALL CONTROL RETAINER

(a) Install the select return spring to the control retainer.

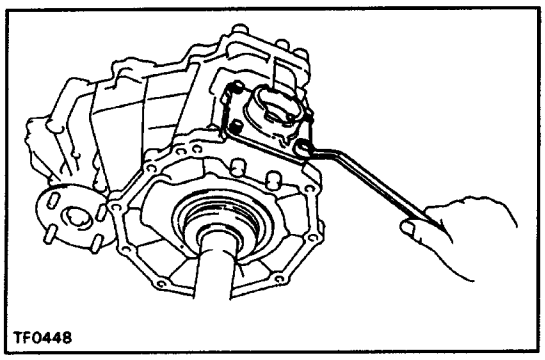

(b) Remove the gasket and install a new one to the control retainer.

(c) Install the control retainer.

(d) Install and torque the 4 bolts.

Torque: 18 N–m (185 kgf–cm, 13 ft–lbf)

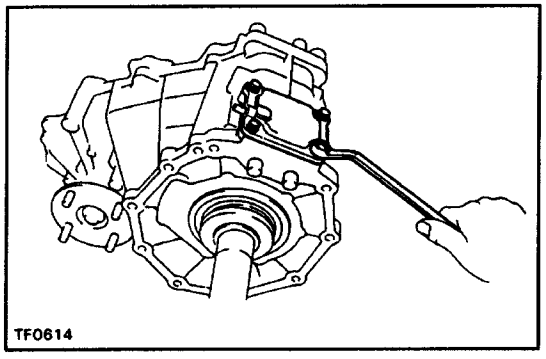

21. 22R–E/G58. A340F

INSTALL UPPER COVER AND OIL DEFLECTOR

(a) Remove the gasket and install a new one to the case cover.

(b) Install the upper cover and oil deflector.

(c) Install and torque the 4 bolts.

Torque: 18 N–m (185 kgf–cm, 13 ft–lbf)

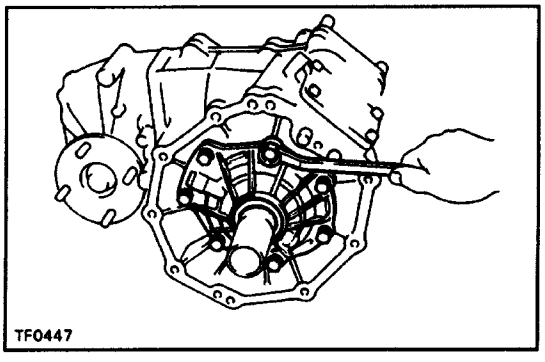

22. INSTALL FRONT RETAINER

(a) Remove the gasket and install a new one to the front retainer.

(b) Install the front retainer.

(c) Apply liquid sealer to the bolts.

Sealant: Part No. 08833–00080, THREE BOND 1344, LOCTITE 242 or equivalent

(d) Install and torque the 7 bolts.

Torque: 11 N–m (115 kgf–cm, 8 ft–lbf)

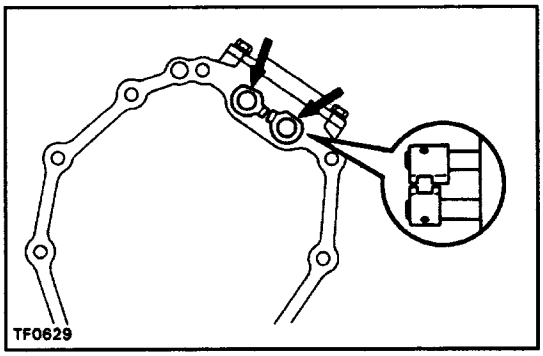

23. 22R–E/G68. A340F:

INSTALL SHIFT GEAR HEAD NO.1 AND NO.2

(a) Install the 2 shift gear heads.

(b) Using a pin punch and hammer, drive in the 2 slotted spring pins.

24. CHECK FOLLOWING ITEMS:

That the input and output shafts rotate smoothly.

That shifting can be made smoothly to all positions.

25. INSTALL TRANSFER INDICATOR SWITCH

Torque: 37 N–m (380 kgf–cm, 27 ft–lbf)

26. INSTALL NO.1 SPEED SENSOR

(a) Install the No.1 speed sensor.

(b) Install and torque the bolt.

Torque: 11 N–m (115 kgf–cm, 8 ft–lbf)

27. 22R – E/A340F:

INSTALL TRANSFER L4 AND NEUTRAL POSITION SWITCH

Torque: 37 N–m (380 kgf–cm, 27 ft–lbf)

TRANSFER REMOVAL

1. REMOVE TRANSFER WITH TRANSMISSION

M/T – See pages G58 MT1–8, R150F MT2–9.

A/T – See pages AT1–72.

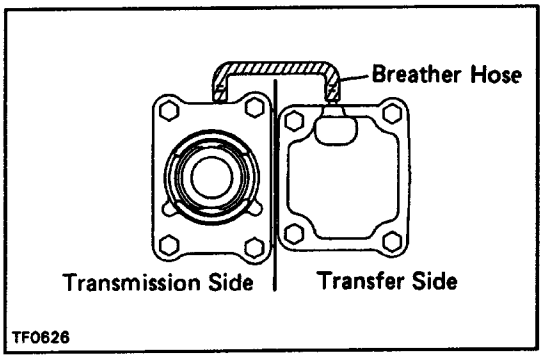

2. 22R–E/G58 AND A340F:

REMOVE BREATHER HOSE

Disconnect the breather hose from transfer upper cover and transmission control retainer.

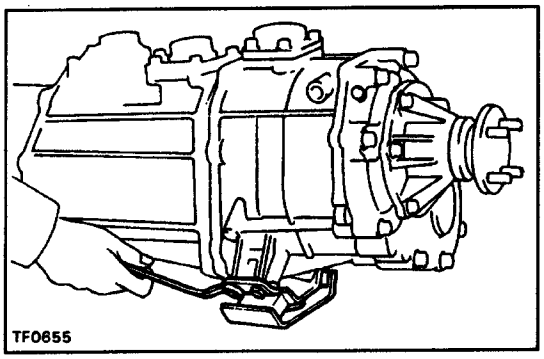

3. REMOVE ENGINE REAR MOUNTING

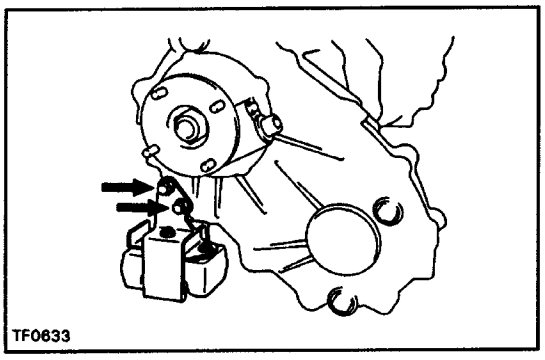

4. REMOVE DYNAMIC DAMPER

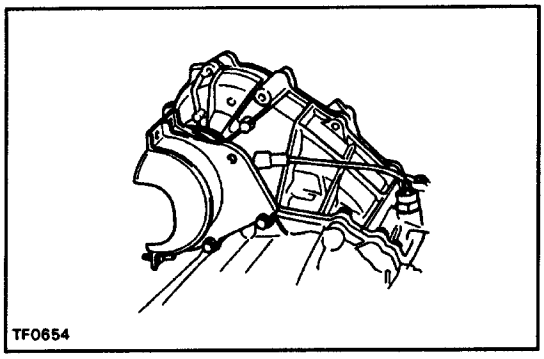

REMOVE PROPELLER SHAFT UPPER DUST COVER AND TRANSFER FROM TRANSMISSION

(a) Remove the dust cover bolt from the bracket.

(b) Remove the transfer adaptor rear mounting bolts.

(c) Pull the transfer straight up and remove it from the transmission.

HINT: Take care not to damage the adaptor rear oil seal with the transfer input gear spline.

TRANSFER DISASSEMBLY

(See pages TR–10 and TR–11)

1. REMOVE SPEEDOMETER DRIVEN GEAR

2. REMOVE TRANSFER INDICATOR SWITCH

3. 22R–E/A340E:

REMOVE TRANSFER L4 AND NEUTRAL POSITION SWITCH

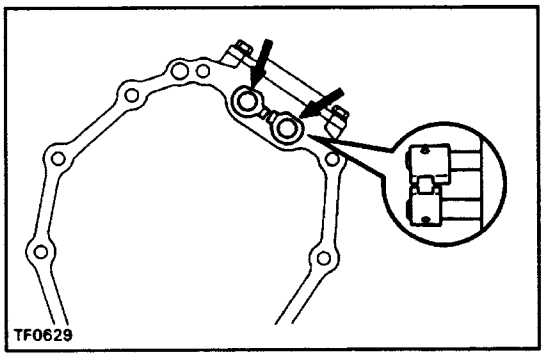

4. 22R–E/G58, A340F:

REMOVE SHIFT GEAR HEAD NO.1 AND NO.2

(a) Using a pin punch and hammer, drive out the 2 slotted spring pins.

(b) Remove the 2 shift gear heads.

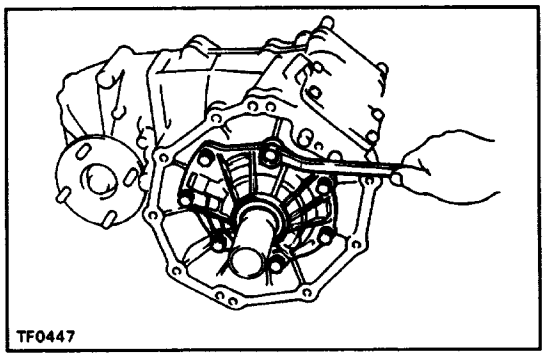

5. REMOVE FRONT RETAINER

Remove the 7 bolts and the front retainer.

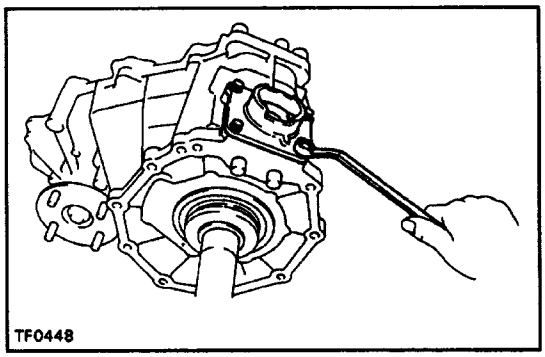

6. 3VZ–E/R150F:

REMOVE CONTROL RETAINER

(a) Remove the 4 bolts and the control retainer.

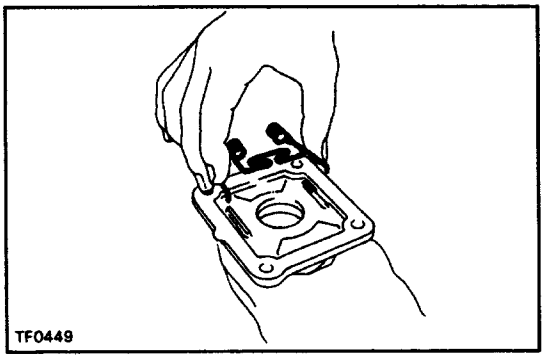

(b) Remove the select return spring from the retainer.

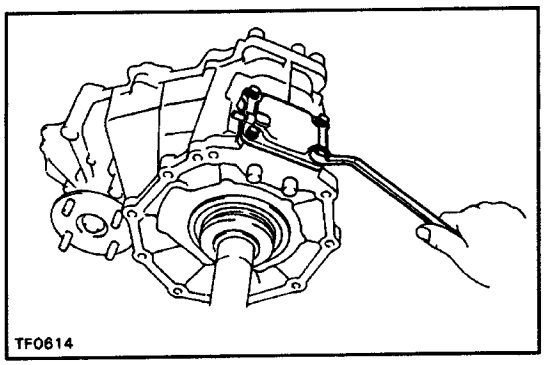

7. 22R–E/G58, A34OF:

REMOVE UPPER COVER AND DEFLECTOR

Remove the 4 bolts and the upper cover and breather hose deflector.

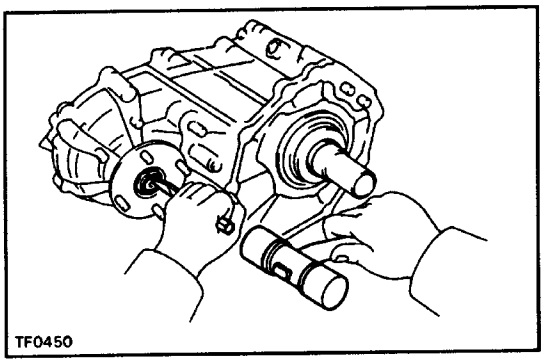

8. REMOVE FRONT COMPANION FLANGE

(a) Using a hammer and chisel, loosen the staked part of the nut.

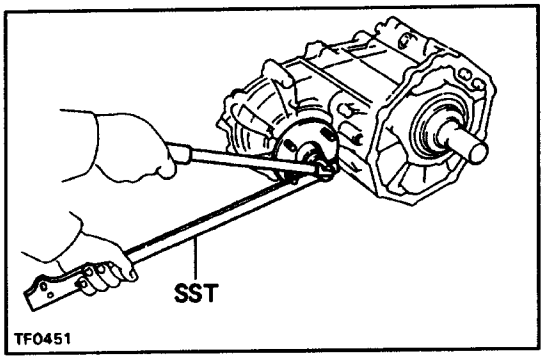

(b) Using SST to hold the flange, remove the companion flange lock nut.
SST 09330–00021

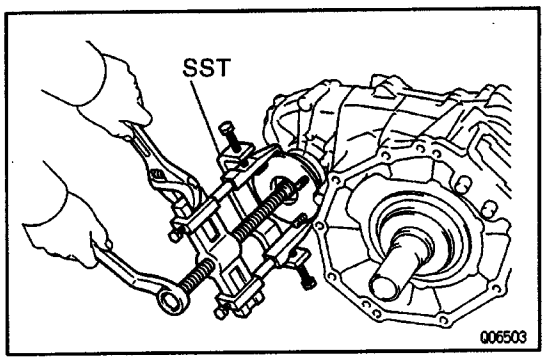

(c) Using SST, remove the companion flange.
SST 09950–40010

9. REMOVE REAR COMPANION FLANGE

Remove the rear companion flange in the same way as the front companion flange.

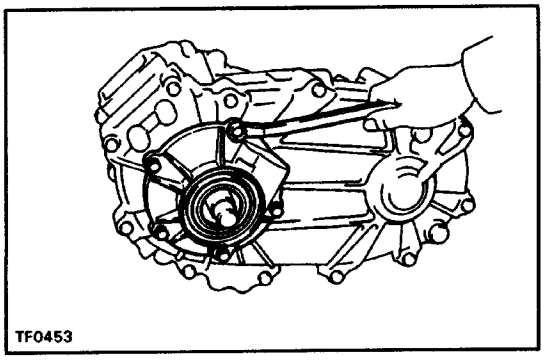

10. REMOVE EXTENSION HOUSING

(a) Remove the 5 bolts.

(b) Using a plastic hammer, tap the extension housing and remove it.

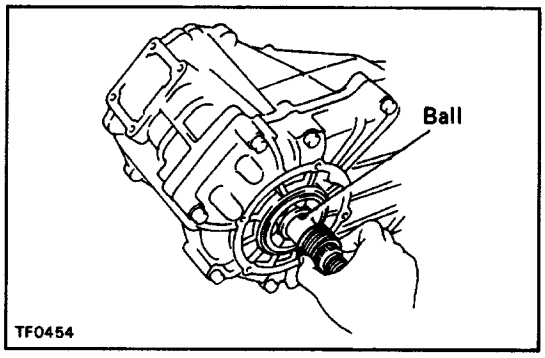

11. REMOVE SPEEDOMETER DRIVE GEAR

(a) Remove the speedometer drive gear.

(b) Using a magnetic finger, remove the ball from the rear output shaft.

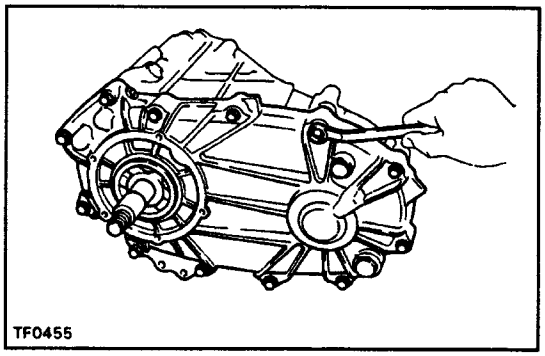

12. SEPARATE FRONT CASE AND REAR CASE

(a) Remove the 12 bolts.

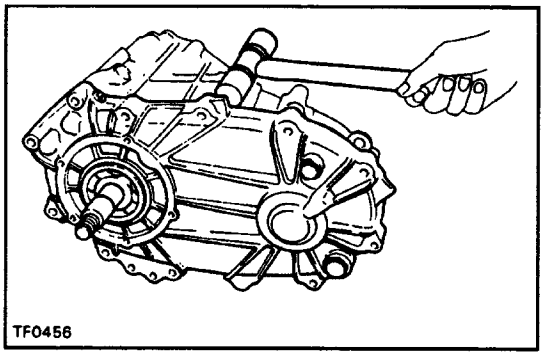

(b) Using a plastic hammer, tap the rear case and separate the front case and rear case.

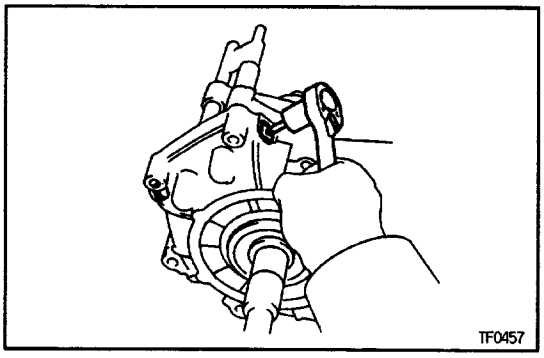

13. REMOVE STRAIGHT SCREW PLUGS, SPRINGS AND LOCKING BALLS

(a) Using a hexagon wrench, remove the 2 screws.

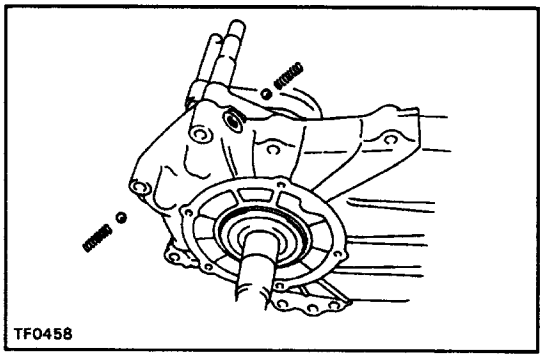

(b) Using a magnetic finger, remove the spring and ball from both holes.

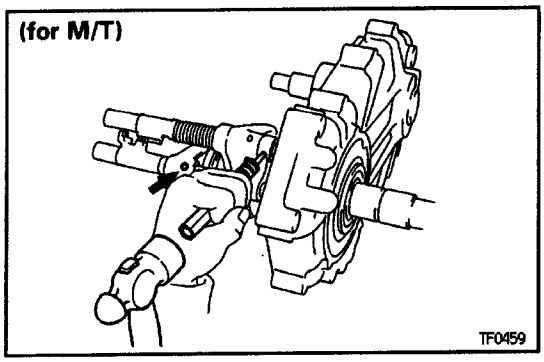

14. REMOVE FRONT DRIVE FORK SHAFT, FORK AND SPRING

(a) Using a pin punch and hammer, drive out the 2 slotted spring pins.

HINT: When the pin is removed from the front drive fork shaft, the shaft will spring loose if the pin punch is removed, so keep the pin punch inserted in the shaft hole.

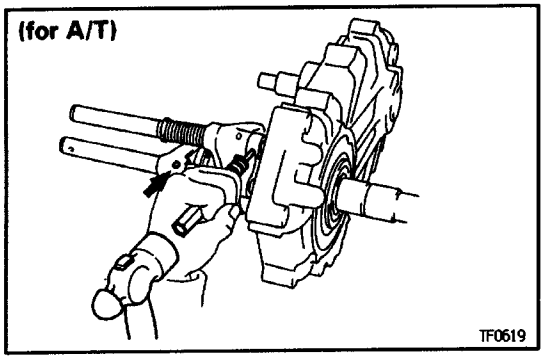

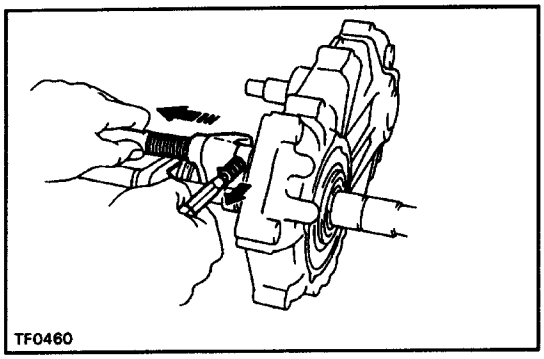

(b) Hold the front drive fork shaft in place by hand, when removing the pin punch.

(c) Remove the front drive fork shaft, spring and fork.

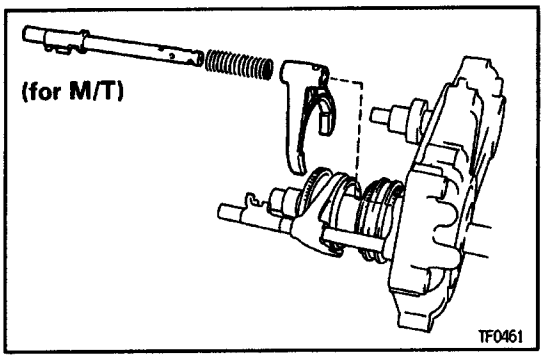

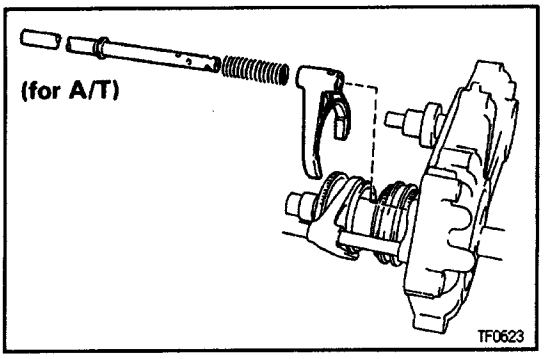

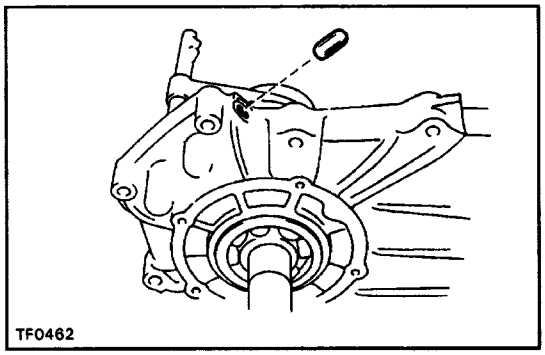

(d) Using a magnetic finger, remove the straight pin.

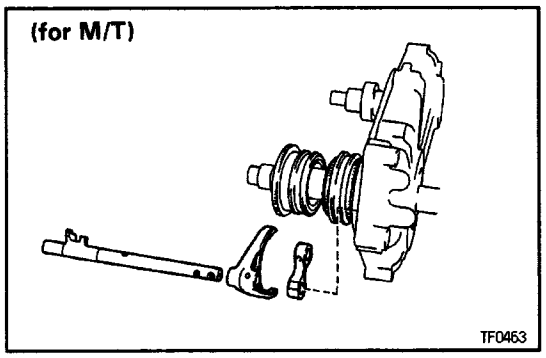

15. REMOVE HIGH AND LOW FORK SHAFT, FORK AND STOPPER

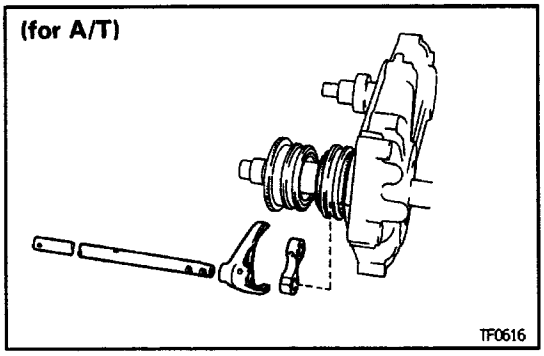

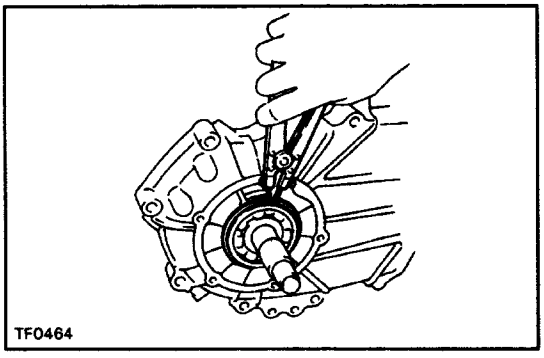

16. REMOVE REAR OUTPUT SHAFT, DRIVEN SPROCKET AND CHAIN

(a) Using a snap ring expander, remove the snap ring.

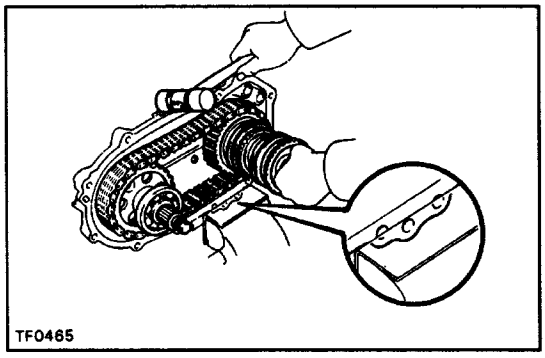

(b) Mount the rear case in the vise.

NOTICE: Be careful not to damage the sealing surface.

(c) Using a plastic hammer, tap the rear case while pulling on the rear output shaft and driven sprocket.

(d) Remove the chain.

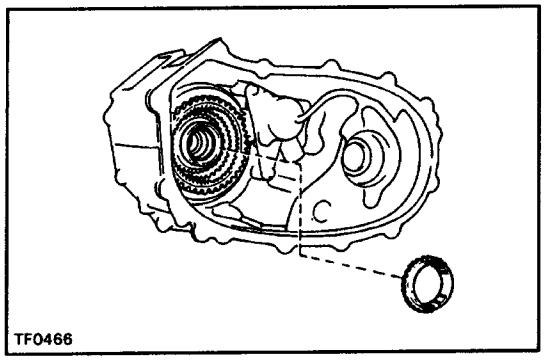

17. M/T:

REMOVE SYNCHRONIZER RING FROM INPUT SHAFT

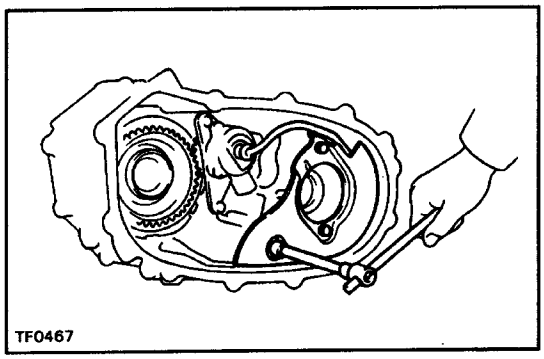

18. REMOVE SEPARATOR WITH OIL STRAINER

(a) Remove the 3 bolts and the separator with the oil strainer.

(b) Remove the O–ring from the oil strainer pipe.

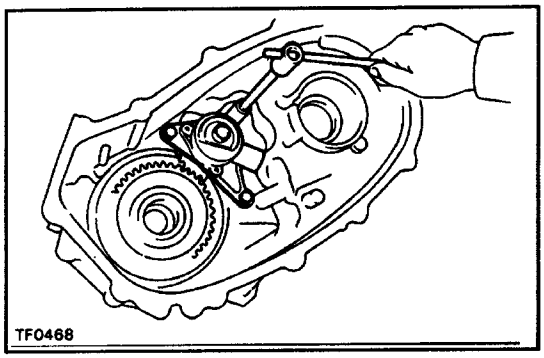

19. REMOVE OIL PUMP BODY ASSEMBLY

Remove the 3 bolts and the oil pump body assembly.

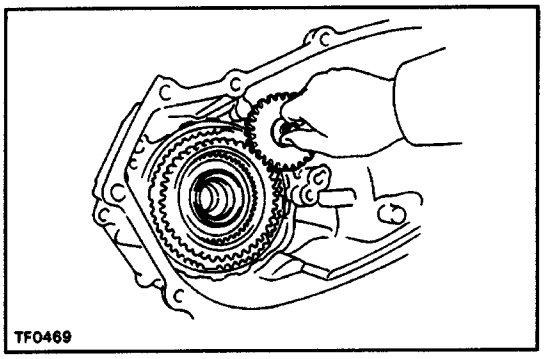

20. REMOVE OIL PUMP DRIVE GEAR

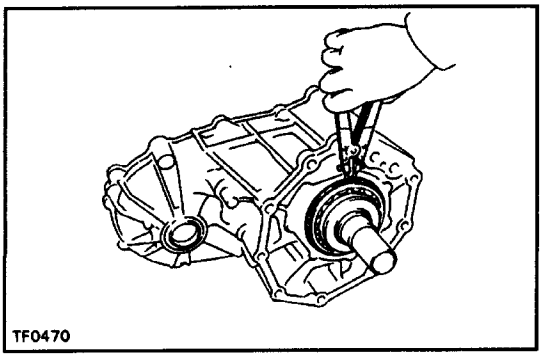

21. REMOVE PLANETARY GEAR ASSEMBLY WITH INPUT SHAFT

(a) Using a snap ring expander, remove the snap ring.

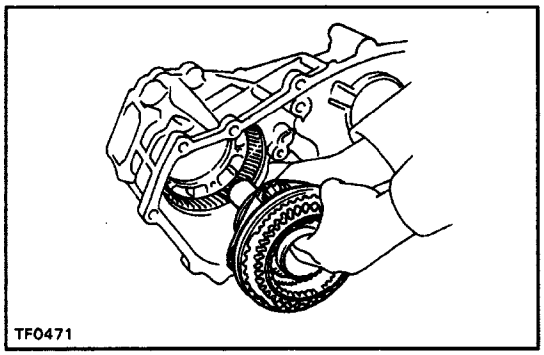

(b) Pull out the planetary gear assembly with the input shaft.

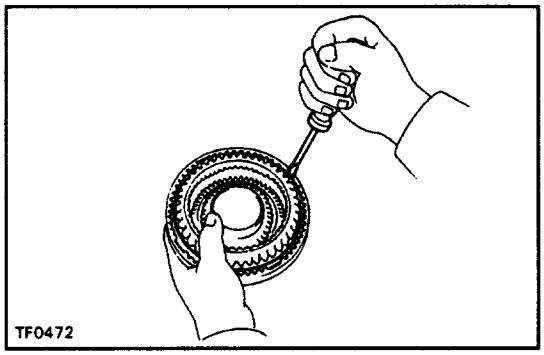

22. REMOVE LOW GEAR SPLINE PIECE

(a) Using a screwdriver, remove the snap ring.

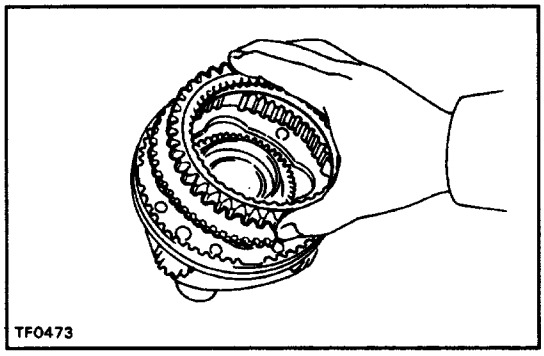

(b) Remove the low gear spline piece.

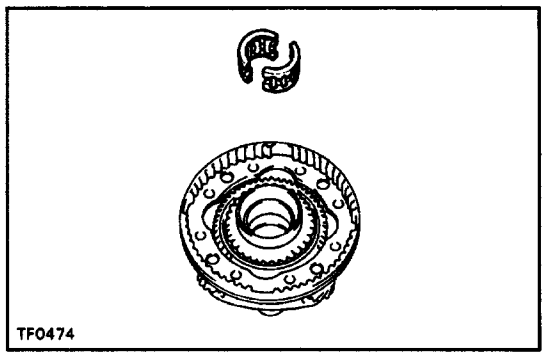

23. REMOVE NEEDLE ROLLER BEARING FROM INPUT SHAFT

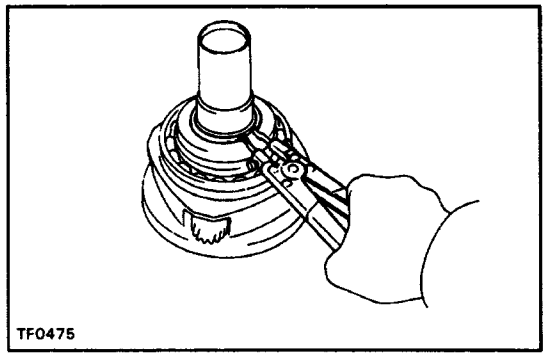

24. REMOVE INPUT SHAFT STOPPER AND THRUST BEARING

(a) Using a snap ring expander, remove the snap ring.

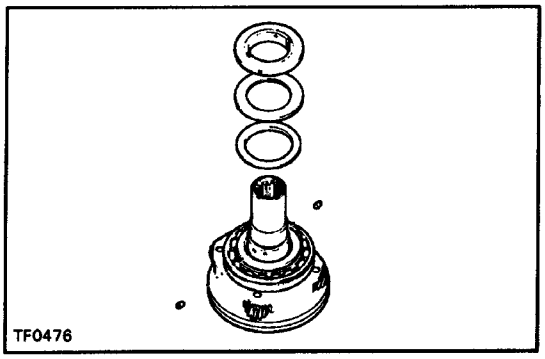

(b) Remove the input shaft stopper, thrust bearing, race and the 2 pins.

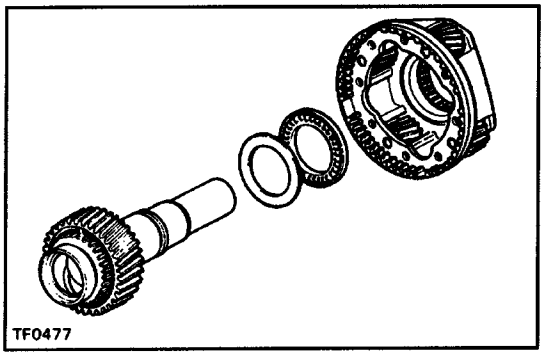

25. REMOVE INPUT SHAFT, THRUST BEARING AND RACE

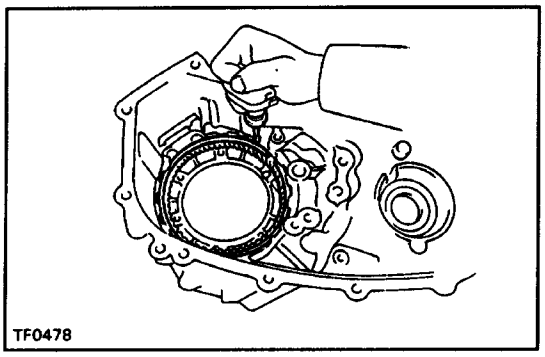

26. REMOVE PLANETARY RING GEAR

(a) Using a screwdriver, remove the snap ring.

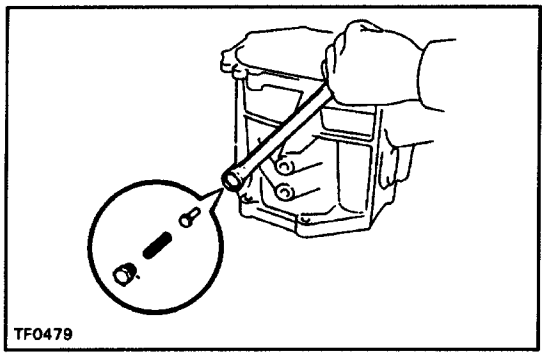

(b) Remove the plug, spring and pin.

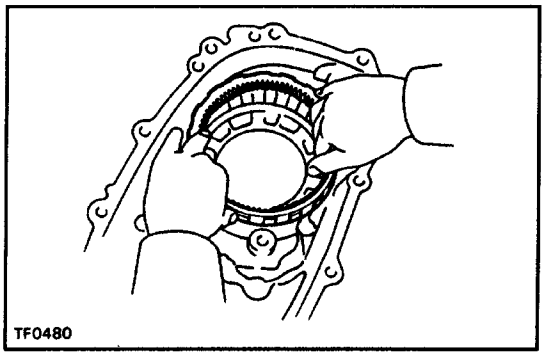

(c) Remove the planetary ring gear.

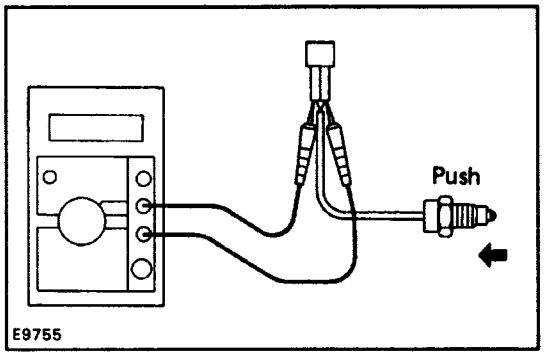

27. INSPECT TRANSFER INDICATOR SWITCH

Check that there is continuity between terminals as shown.

Switch Position	Specified
Push	**Continuity**
Free	**No continuity**

If operation is not as specified, replace the switch.

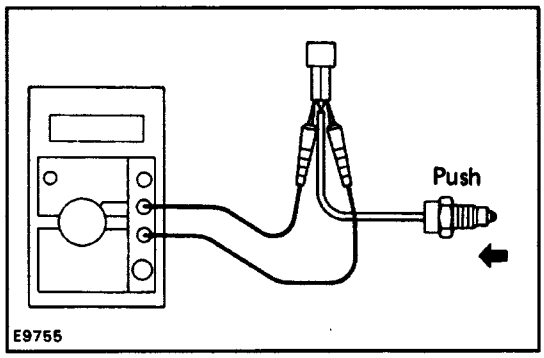

28. A/T:

INSPECT TRANSFER L4 AND NEUTRAL POSITION SWITCH

Check that there is continuity between terminals as shown.

Switch Position	Specified
Push	**Continuity**
Free	**No continuity**

If operation is not as specified, replace the switch.

TROUBLESHOOTING

Problem	Possible cause	Remedy	Page
Hard to shift or wilt not shift	Transfer faulty	Disassemble and inspect transfer	TR–4, 7
Transfer jumps out of gear	Transfer faulty	Disassemble and inspect transfer	TR–4, 7

PRECAUTION

When working with FIPG material, you must be observe the following.

- Using a razor blade and gasket scraper, remove all the old packing (FIPG) material from the gasket surfaces.
- Thoroughly clean all components to remove all the loose material.
- Clean both sealing surfaces with a non–residue solvent.
- Apply the seal packing in an approx.1 mm (0.04 in.) wide bead along the sealing surface.
- Parts must be assembled within 10 minutes of application. Otherwise, the packing (FIPG) material must be removed and reapplied.